U.S. DEPARTMENT OF THE INTERIOR
BUREAU OF LAND MANAGEMENT
RAWLINS FIELD OFFICE, WYOMING
NOVEMBER 2007

ENVIRONMENTAL ASSESSMENT FOR THE CATALINA UNIT COALBED NATURAL GAS PRODUCED WATER DISPOSAL PROJECT II

CARBON COUNTY, WYOMING

MISSION STATEMENT

It is the mission of the Bureau of Land Management to sustain the health, diversity, and productivity of the public lands for the use and enjoyment of present and future generations.

U.S. Department of the Interior
Bureau of Land Management

November 6, 2007

ENVIRONMENTAL ASSESSMENT TITLE PAGE
Rawlins Field Office

EA No. WY-030-07-EA-244

Name or Title of Action: Catalina Unit CBNG Produced Water Disposal Project II

Proponent: Double Eagle Petroleum Company

File Name, Number, and Location: Oil and Gas Lease WYC-075345A

Surface Facility Location: T.16N., R.92W., 6th P.M., Sec 12, SW¼SE¼, Carbon County, Wyoming
Discharge Point Location: T.16N., R.92W., 6th P.M., Sec 20, SE¼SE¼, Carbon County, Wyoming

Field Office: Rawlins Field Office (RFO)

Rawlins Field Office (RFO) Interdisciplinary Team (IDT)

IDT Member	Title
Travis Bargsten	Natural Resource Specialist
David Simons	Environmental Coordinator
Andy Stone	Hydrologist
Patrick Lionberger	Fisheries Biologist
Andy Warren	Rangeland Management Specialist
Paul Rau	Recreation Planner
Rhen Etzelmiller	Wildlife Biologist
Nina Trapp	Archaeologist
Mark Newman	Geologist
Susan Foley	Soil Scientist
Jerry Dickinson	Petroleum Engineer

Activity Code: 1310

Appendices: A: Sundry Notices/Proposal
B: Discharge Point Erosion Control Structure
C: Dilution Analysis and Section 7 Consultation

Wyoming DEQ WYPDES Permit Source:
http://deq.state.wy.us/wqd/WYPDES_Permitting/WYPDES_PNs_and_appr_permits/FinalPermits_Apps/FP_0054001-0056000/WY0054038_fp_MAJ_MOD_DOUBLE_EAGLE_6-29-06.pdf

INTRODUCTION

Purpose and Need for the Proposed Action

The Proposed Action as described in this Environmental Assessment (EA) is necessary for the proponent to exercise lease rights and develop domestic natural gas resources. In Coalbed Natural Gas (CBNG) operations, water is removed from coal formations allowing for desorption of natural gas, principally methane, for production and eventual sale. Disposal of produced water is necessary to allow for continued natural gas production. The Proponent has indicated that the Proposed Action is necessary to provide for additional options in disposing of water within the Cow Creek/Catalina Unit CBNG development area.

Conformance with Land Use Plan

Oil and gas development is covered on pages 30-32 in the Great Divide Resource Management Plan (RMP), which was approved on November 8, 1990. Development of oil and gas reserves as described in the Proposed Action is in conformance with the RMP decisions which state that the Management Objective is to provide opportunity for leasing, exploration, and development of oil and gas while protecting other resource values.

The development of this project would not affect the achievement of the Wyoming Standards for Healthy Rangelands (August 1997).

Relationship to Statutes, Regulations, Policy, Permits or other Plans

In December 2005, the Proponent submitted a proposal to the RFO that included the discharge of treated, produced water to ephemeral drainages within the project area. That proposed action was considered under a NEPA analysis (WY-030-07-EA-001) completed by the RFO in April of 2007. As a result of that analysis and feedback from the public and other governmental agencies, the RFO brought concerns about the potential impacts from the original proposal to the Proponent.

In order to address the principal concerns of the RFO, the Proponent elected to change the proposed action (submitted as a Sundry Notice to the RFO on June 21, 2007, See Appendix A). The primary change that was made is the elimination of discharge to ephemeral drainages. Instead, the treated produced water would be transported by buried pipeline to a point above the George Dew Wetlands in the Muddy Creek drainage. This EA addresses the new, revised proposal to dispose of produced water from the Catalina Unit CBNG operations. This EA incorporates by reference the applicable disclosure and analysis from the original EA (WY-030-07-EA-001). Rather than unnecessarily repeat information and analysis that was present in the original EA, this EA will identify the changes to the proposed action, and will disclose and analyze potential environmental impacts resulting from the new proposed action. Where the original analysis still applies, this EA incorporates by reference the disclosure and analysis provided in the original EA.

Since the original EA was prepared and released for public review, the Record of Decision (ROD) for the Atlantic Rim Natural Gas Field Development Project EIS was signed. Subsequently, additional activities within the Atlantic Rim Project Area have been authorized, and construction and drilling activities under those authorizations are imminent (pending resolution of an outstanding request for a stay of activities and appeal to the ROD).

PROPOSED ACTION AND ALTERNATIVES

Proposed Action

The general location of the proposed facility and discharge points is approximately 28 miles north of Baggs, Wyoming (*Figure 1* and *Figure 2*). Most of the Proposed Action is located on BLM-administered public lands, with a small portion located on fee lands near Muddy Creek. Access to the proposed water treatment facility would be provided by existing roads off of State Highway 789.

The Proposed Action includes the treatment and release of water as provided for in the approved-modified WYPDES permit WY0054038. This State of Wyoming permit is available on the WDEQ website, and is

Catalina Unit CBNG pH2O Disposal Project

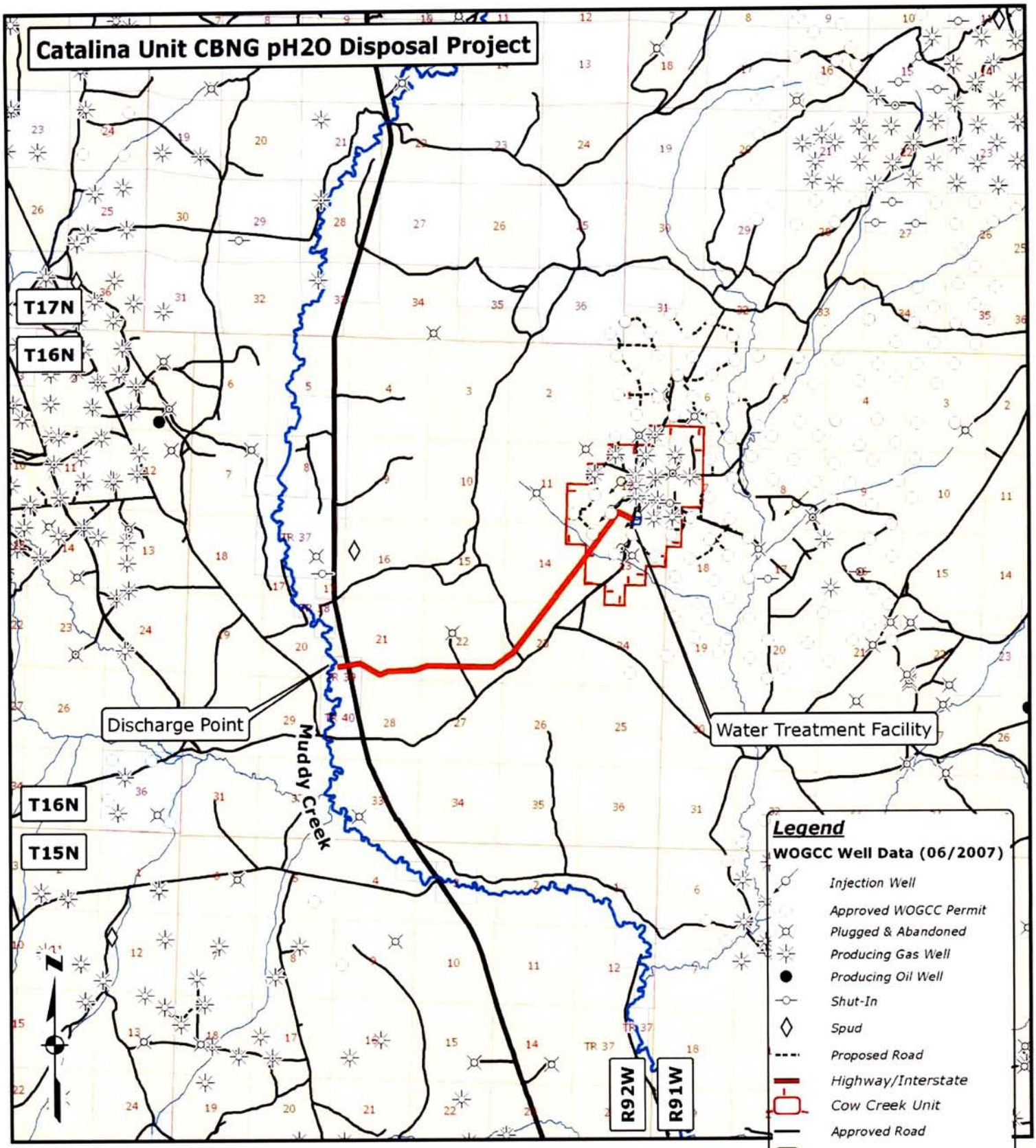

U.S. Department of the Interior
Bureau of Land Management
Rawlins, Wyoming

0 1 2 4 Miles

1 inch equals 1.6 miles
1:100,000

Drafted By: TDB 08/08/2007

The BLM can not guarantee the accuracy of these data.

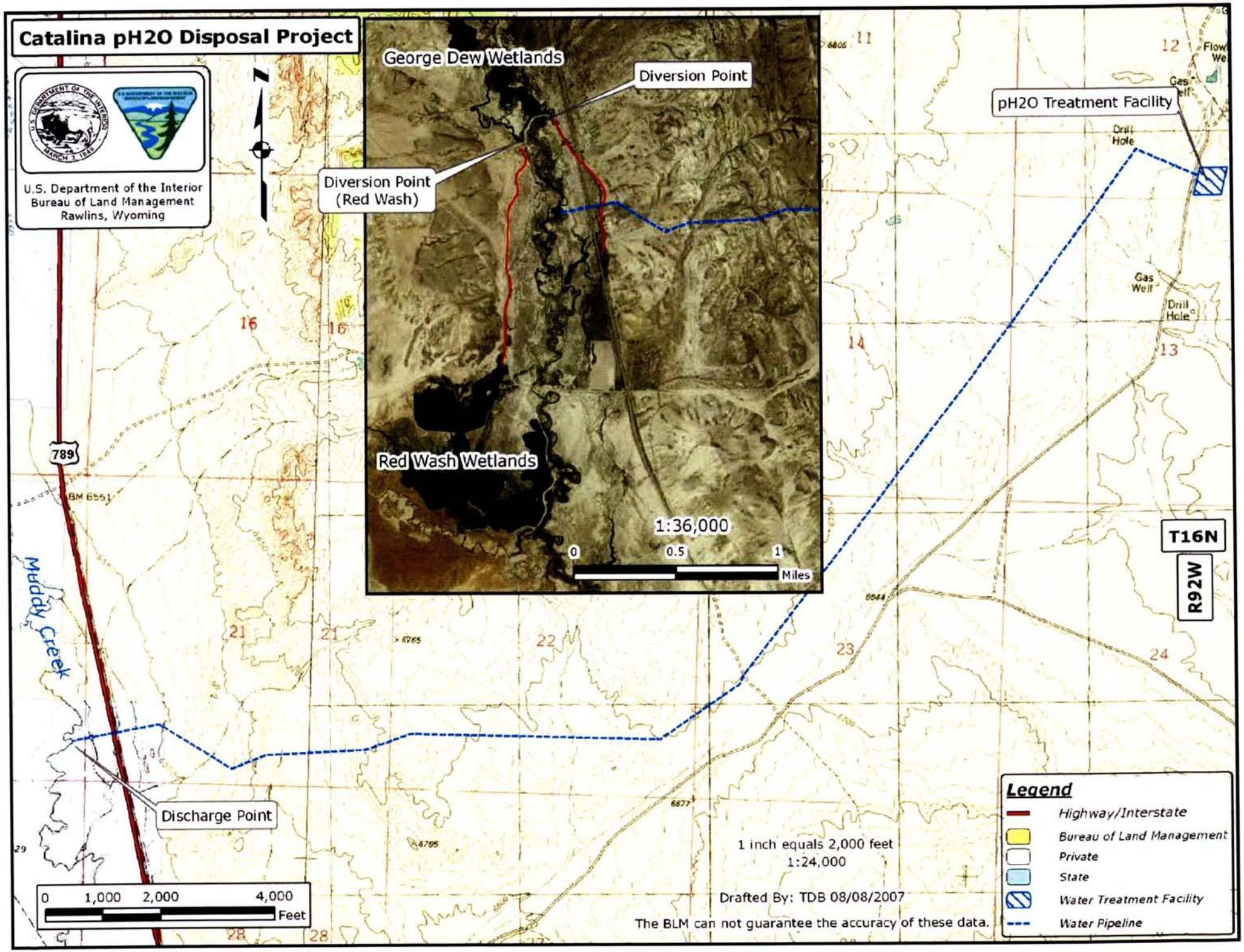
Catalina pH2O Disposal Project
U.S. Department of the Interior
Bureau of Land Management
Rawlins, Wyoming
George Dew Wetlands
Diversion Point
Diversion Point
(Red Wash)
Red Wash Wetlands
1:36,000
0
0.5
1
Miles
pH2O Treatment Facility
Drill Hole
Gas Well
Drill Hole
Gas Well
Flow We
789
BM 6551
Muddy Creek
Discharge Point
T16N
R92W
0
1,000
2,000
4,000
Feet
1 inch equals 2,000 feet
1:24,000
Drafted By: TDB 08/08/2007
The BLM can not guarantee the accuracy of these data.
Legend
Highway/Interstate
Bureau of Land Management
Private
State
Water Treatment Facility
Water Pipeline

incorporated as a partial description of the proposed action. Surface-disturbing actions are described in the Sundry Notice, and include the short-term surface disturbance of up to 5 acres at the well pad for construction of the EMIT water treatment facility. Preparation of the site for equipment installation would include the removal and storage of topsoil and grading of the area. A single buried 12"-diameter steel or HDPE pipeline would be installed from the treatment facilities to the discharge point (*Figure 2*). This pipeline would total approximately 23,400 linear feet in length, and would result in a short-term disturbance width of up to 50 feet (less, where aligned parallel and adjacent to existing pipeline disturbances. The pipelines would result in the short-term surface disturbance of approximately 26.9 acres. The pipeline is expected to be buried to a depth of approximately 4 feet below the ground surface.

In total, the Proposed Action would result in the short-term disturbance of up to 31.9 acres. Reclamation of the pipeline would be initiated within one year in accordance with the Master Surface Use Plan for the Cow Creek/Catalina Unit PODs and Sundry Notice. The facility area would remain in a disturbed state until the end of operations, for up to 20 years. Upon the end of operations at this facility, the above-ground equipment would be removed, and below-ground pipelines evacuated and buried in-place. Reclamation would then be initiated on any remaining areas in a disturbed state.

Reclamation success is dependent upon a variety of factors, including precipitation. Reclamation would be expected to meet BLM standards for successful revegetation within approximately 5 years.

Traffic to and from the water treatment facility would increase during the construction phase and during the establishment of the facility. After this, traffic would decrease and would be similar to what currently exists in the maintenance of the existing and proposed CBNG development, with the addition of intermittent hauling traffic to carry away waste brine from the water treatment facility.

Double Eagle has indicated that hazardous materials may be used and stored at the water disposal facility for this Proposed Action. Two 300-gallon tanks would store hydrochloric acid (HCl) to be utilized in the water treatment process. These tanks would be bermed to contain any accidental releases.

The water treatment facility would utilize the Higgins Loop™ Continuous Ion Exchange process to reduce the concentration of solutes (lower the TDS). This would result in a discharge that would meet the WYPDES effluent criteria. A small amount (~1% of the waste stream) of concentrated brine would be formed. This brine would be stored on-location and then removed by trucks to the CCU #3-12 (located north of the treatment facility) where it would be reinjected as authorized by an Underground Injection Control (UIC) permit from the WDEQ. The treatment facility would include a 30'-tall tower. An EMIT "Applications Bulletin" provides a photograph of an installed typical "field unit" (*Figure 3*).

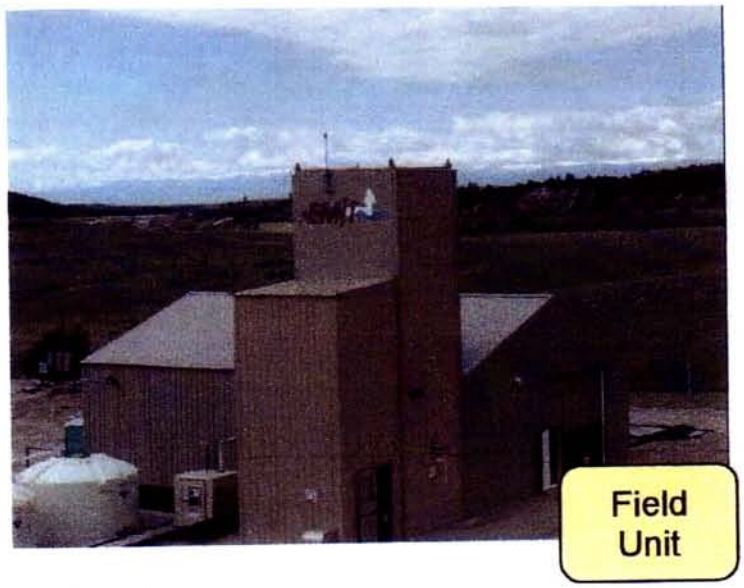

Figure 3

The water discharge point will be constructed to reduce erosion at the point where effluent is released. This would include the construction of a control structure (See Appendix B). This structure would reduce water velocity, reducing potential for erosion at the discharge point. There would be adequate pressure head from the treatment facility; no pumps or water transfer stations would be necessary to transport the water from the facility to the discharge point.

On June 8, 2006, the RFO Interdisciplinary Team (IDT) met with the proponent and the proponent's consulting hydrogeologist at the proposed water treatment facility to conduct an onsite review of the proposal. On July 19, 2007, an onsite inspection of the proposed transfer pipeline and discharge point was conducted.

Development of Alternatives

In the development of alternatives for this analysis, guidance from BLM policy contained in Washington Office Instructional Memorandum (WY-IM) 2005-247, dated September 30, 2005:

> "The alternatives that must be analyzed are those (1) which meet the purpose and need for the proposed action; (2) which reduce the adverse environmental effects of the proposed action; (3) which are feasible; (4) whose effects can be analyzed; and (5) which are not substantially similar in effects to an alternative that is analyzed."

No Action Alternative

NEPA regulations require that alternative analyses in NEPA documents "include the alternative of no action" (40 CFR 1502.14(d)). For this analysis, "no action" means that the BLM would reject the proponent's proposal and "the proposed activity would not take place."

ALTERNATIVES CONSIDERED, BUT ELIMINATED FROM FURTHER ANALYSIS

Two alternatives (additional reservoir capacity, transport of effluent by pipe to downstream point) were discussed in the original EA. The second alternative considered but eliminated from further analysis (transport by pipe) has been changed to the proposed action and refined. No other alternatives were considered for additional analysis, as no unresolved resource conflicts were apparent after detailed review.

AFFECTED ENVIRONMENT

The following critical elements of the human environment (Table 2) were considered in the course of this analysis.

	Affected			Affected	
Critical Element	**Yes**	**No**	**Critical Element**	**Yes**	**No**
Air Quality	X		T & E Species		X
ACEC's		X	Wastes, Hazardous/Solid	X	
Cultural Resources	X		Water Quality	X	
Prime/Unique Farmlands		X	Wetlands/Riparian Zones	X	
Floodplains	X		Wild & Scenic Rivers		X
Native American Religious Concerns		X	Wilderness		X
Environmental Justice		X	Invasive, Nonnative Species	X	

Table 2

The Affected Environment is, in detail, described in the Cow Creek POD EA (2002), the Atlantic Rim Draft EIS (ARDEIS, 2005), and the Catalina Unit CBNG Produced Water Disposal Project EA (2007). Those documents are incorporated by reference to this EA.

RFO IDT review of the proposal was used to identify what the principal issues are for this project considering the changes made to the Proposed Action from the analysis provided in the original EA (WY-030-07-EA-001). Where determined by the IDT to be necessary, Affected Environment descriptions are provided in this EA when that information is critical in the context of considering the revised Proposed Action and alternatives.

Geology/Paleontology

No known scientifically significant paleontological resources are present in the project area.

Climate & Air Quality

The Project Area is located in a continental dry, cold-temperature-boreal climate (Trewartha 1968). This climate is characterized by a deficiency of precipitation (i.e., evaporation exceeds precipitation), and generally has cold temperatures where fewer than eight months of the year have an average temperature greater than 50° F, with warm summer days, cool summer nights, and cold winters.

Mean annual precipitation is about 7 - 9 inches in the project area depending on elevation. Precipitation is somewhat evenly distributed throughout the year with May being the wettest month (1.5 inches at Baggs and 1.3 inches at Rawlins) followed by June, July, and October. January is the driest month (0.5 inches at both Baggs and Rawlins). The majority of precipitation falls as rain from frontal systems and thunderstorms. In regard to intensity of rainfall events, the 50-year, 24-hour precipitation rate ranges from 2.2 inches to 2.6 inches in the project area (Miller et al. 1973). Precipitation in this region varies significantly from year to year. For example, at Rawlins, the month of May has had as little as 0.03 inch and January as much as 1.9 inches of precipitation. The greatest annual precipitation recorded at Rawlins was 12.6 inches in 1998, while the least was 4.9 inches in 1954 (WRCC 2005).

Soils

Runoff is medium to rapid and the hazard of water erosion is moderate to severe.

Refer to the Cow Creek POD EA (2002), the Atlantic Rim Draft EIS (ARDEIS, 2005), and the Catalina Unit CBNG Produced Water Disposal Project EA (2007) for a full description of project-area soils.

Water Resources

Drainage from the project area flows into Muddy Creek, a tributary of the Little Snake River (Hydrologic Unit Code [HUC] 14050003) in the Colorado River Basin. Muddy Creek joins the Little Snake just above Baggs Wyoming, and the Little Snake River joins the Yampa-White river system within the Colorado River Basin. The Yampa-White river system is important for native fish recovery programs for the humpback chub, bonytail, Colorado pikeminnow, and razorback sucker. The Colorado River is probably one of the most utilized river systems in the west with innumerable municipal, industrial, and agricultural uses. Much of the Muddy Creek watershed is managed by the BLM and the land has historically been managed primarily for its range resources (agricultural uses, primarily grazing), as well as wildlife habitat, energy exploration and development, transportation, and recreational uses.

Muddy Creek is described as a high-elevation, cold-desert stream. The watershed encompasses approximately 1000 square miles, ranges in elevation from about 6,300 feet to about 8,200 feet, and extends from the Sierra Madre Range to the Red Desert. Beatty (2005) divided Muddy Creek into two major segments, upper Muddy Creek and lower Muddy Creek. The upper segment is identified as that portion of the watershed upstream of a large headcut stabilization structure that is located in T17N: R92W. This structure is located just upstream of where Muddy Creek crosses Highway 789. Lower Muddy Creek is highly erosional and has abundant channel incisions (Beatty 2005). Channel substrates consist predominantly of very fine-grained sediments (sands, silts, and clays) in the lower segment and mostly rock substrates (gravels and cobbles) in the upper segment. In addition, a large wetland complex occurs on the reach of Muddy Creek that lies west of Highway 789 in T16N: R92W. This wetland area (George Dew Irrigated Meadows) consists of impoundments, man-made channels, vertical drop structures, headgate structures for water diversion, overflow spillways, and a braided stream channel network (Beatty 2005). Flow from Muddy Creek is diverted at the George Dew wetland complex via canal south to the Red Wash wetland complex. Muddy Creek below the George Dew-Red Wash wetlands behaves as an intermittent- ephemeral system, flowing in response to localized precipitation events, contributions from tributaries, and perhaps groundwater influx.

A recent survey of the channel segment between the George Dew and Red Wash wetland complexes

showed dry, non-flowing reaches, interrupted by isolated pools ranging in size from 5 meters to hundreds of meters in length. Pools likely result from depression storage from recent precipitation events, groundwater influx, ephemeral runoff, or a combination of these. The discharge outfall proposed in this project is located in this channel segment.

Streamflow in Muddy Creek and its tributaries varies with location along the drainage. An appreciable amount of snow accumulates at the higher elevations of the watershed, particularly in the more protected areas having pronounced gullies and canyons. Therefore, the snowmelt during the spring months accounts for a significant runoff event from tributaries draining these headwaters areas. Spring snowmelt runoff generally occurs from March through mid-June. Additional high flow events can occur in response to precipitation events during the summer and fall months. Numerous springs flow perennially that contribute low flows to the headwater tributaries; however, losses to seepage and evapotranspiration deplete these flows so the downstream reach of Muddy Creek flows intermittently.

The relative yield from rainstorms becomes more significant in the lower elevations of the drainage basin. Base flow and intermittency commonly occur from July through September, but can occur as early as April (Goertler 1992). Particularly within the lower segment of the Muddy Creek basin, tributary channels are generally dry and prone to flashy, periodic flood events from isolated thunderstorm systems from May to October. Of the four nearby Colorado River Basin gauging stations, the Muddy Creek stations measure runoff from the largest drainage area (Table 3). However, the average flow in Muddy Creek near Baggs, Wyoming, which is located near the mouth of Muddy Creek, is much less than that measured at the Little Snake River or Savery Creek gauging stations. This is because the headwaters of the Little Snake and portions of Savery Creek are in the Sierra Madre Range. The average (mean) Muddy Creek flow during the period of record at the discontinued gauging station was 14.8 cubic feet per second (cfs) and 19.1 cfs at the active station (Table 3). Those flowrates can be compared to higher downstream rates of 514 cfs in the upper Little Snake River and 103 cfs in Savery Creek.

In general, Muddy Creek experiences higher individual events and lower annual water yield due to climate conditions discussed previously. Unit runoff, calculated by dividing the average annual runoff into the effective drainage area, is much lower in Muddy Creek. Unit runoff in the Muddy Creek drainage basin was about 0.2 inch per year, as compared to 7.1 inches per year in the upper Little Snake River drainage basin and 4.2 inches per year in the Savery Creek basin. The calculated median flows, which discount the effect of short-duration, high-volume flood events, are 2.8 cfs and 3.7 cfs at the two Muddy Creek stations, and 100 cfs and 30 cfs at the Little Snake River and Savery Creek stations, respectively (Table 3). Excluding the active Muddy Creek gauging station, the median flow rates of the three Colorado River Basin stations were calculated only during the time period in which all three stations were active: October 1, 1987 through September 30, 1991, excluding the months of November through March. During this time period, the median flows in Muddy Creek, Little Snake River, and Savery Creek were 6.9 cfs, 13.5 cfs, and 25 cfs, respectively. These calculations demonstrate that some of the differences between the average and median flowrate calculations presented in Table 3 may be caused by climactic differences because precipitation varies significantly from year to year, runoff varies significantly as well.

Table 3 summarizes the available streamflow data from United States Geological Survey (USGS) stations in Muddy Creek. In 2004, the RFO-BLM sponsored USGS surface water gauging Station No. 09258980 (Muddy Creek below Young Draw near Baggs). This station site is located immediately upstream of the discontinued USGS Station No. 09259000 (Muddy Creek near Baggs - period of record 1987–1991).

Station Name	Station Number	Drainage area (sq. mi.)	Period of Record	Mean Flow[1] (cfs)	Average Annual Runoff (ac-ft/yr)	Median Flow[2] (cfs)	Min. Flow[2] (cfs)	Max. Flow[2] (cfs) Date
Muddy Creek near Baggs	09259000	1,257 (1,187)[4]	10/1/87 - 9/30/91	14.8	10,690	2.8	0.03	632 3/23/88
Muddy Creek below Young Draw near Baggs	09258980	1,150	4/17/04 - present	19.1	13,828	3.7	0.13	236 1/12/05
Little Snake River near Dixon	09257000	988	10/1/10 - 9/30/23 10/1/38 - 9/30/71 4/1/72 - 9/30/97[3]	514	372,400	100	0	10,400 5/16/84

Table 3: USGS Gauging Stations

[1] Over period of record
[2] Of mean daily values
[3] Contributing drainage area
[4] Daily flow measurements were only made from April through October during this time; not included in calculation of mean or median flow.

Surface Water Quality Characterization

In the arid, high plains of southwestern Wyoming, surface water quality, like streamflow, is variable both spatially and temporally. Perennial stream water quality is generally of better quality than that of the ephemeral and intermittent streams. The quality of runoff is largely dependent upon the rates of salts, sediments, and organic materials that accumulate in the dry stream channels between periods of runoff. Factors that can govern the rate of buildup of these materials are the basin's physical characteristics, land uses, and season of the year.

WDEQ classifies water quality based on beneficial uses (current water quality classification for the project area are shown in Table 4). A summary of the water quality data from each of five USGS surface water sampling stations located in the Little Snake River watershed (two on Little Snake River, three on Muddy Creek) for the respective periods of record are shown on Table 5. The two Little Snake River stations represent perennial stream surface water quality in the area and the three Muddy Creek stations represent intermittent stream surface water quality.

Surface Water	Classification
Little Snake River	2AB
Muddy Creek (mouth to Sec. 29, T.17N., R.89W.)	2C
Muddy Creek (remainder)	2AB

Table 4: Classification of Streams in the Project Area (Source: WDEQ)

	USGS Surface Water Quality Data				
	Little Snake River	Little Snake River	Muddy Creek	Muddy Creek	Muddy Creek
Station Number	09257000	09259050	09258900	09259000	09258980
Sample period	1957-1988	1980-1997	1976-1978	1957-1991	May 2005-present[1]
# of samples[2]	107	100	3	41	nm
pH	8.1	8.1	8.6	8.2	nm
Conductance, μmhos/cm (mean)	$259_{(34)}$	$366_{(90)}$	$1,350_{(2)}$	$966_{(35)}$	$1,300_{(111)}$
Conductance, μmhos/cm (min.)	82	87	600	529	598
Conductance, μmhos/cm (max.)	460	855	2,100	1,790	3,550
TDS (mean)	$158_{(9)}$	$243_{(17)}$	$913_{(2)}$	$346_{(1)}$	nm
TDS (min.)	46	87	396	346	nm
TDS (max.)	260	540	1,430	346	nm
Suspended solids[3] (mean)	$154_{(101)}$	$228_{(25)}$	$6,198_{(2)}$	$3,191_{(41)}$	nm
Suspended solids[3] (min.)	4	6	195	7	nm
Suspended solids[3] (max.)	1,180	852	12,200	22,500	nm
Turbidity, JTU	13	167	1,260	nm	nm
Calcium	30	34	54	42	nm
Magnesium	8	12	44	40	nm
Potassium	2	2	7	9	nm
Sodium	11	26	200	286	nm

Bicarbonate	159	190	373	308	nm
Sulfate	25	54	380	320	nm
Chloride	3	2	65	32	nm
Iron, µg/L	74	164	105	nm	nm
Hardness ($CaCO_3$)	111	151	315	270	nm
Dissolved Oxygen	9	10	11	10	nm

Table 5: Surface Water Quality In the Project Area
[1] Daily mean values analyzed: May 27, 2005 to September 14, 2005.
[2] Total number of grab samples analyzed; not every parameter was analyzed in every sample.
[3] Total concentration; except as noted here, all reported values represent dissolved concentrations.
All units are mg/L except as noted.
nm = not measured
(34) = Number of samples analyzed for that parameter.

As Table 5 indicates, considerably more measurements of specific conductance have been recorded than total dissolved solids (TDS) concentrations at these seven surface water sampling stations. For individual streams, a good relationship can commonly be established between specific conductance and TDS concentration. In general, as ionic concentrations increase, conductance increases (Hem 1970). Therefore, specific conductance measurements of streams in the project area are related to the dissolved solids concentrations. The USGS intends to collect periodic TDS concentration samples at Muddy Creek Station No. 09258980 beginning in 2006 so that a relationship between conductivity, which is presently monitored hourly on a real-time basis continuously, and TDS concentration can be determined.

Surface water quality within the Muddy Creek drainage basin, like streamflow, is variable both spatially and temporally. The ephemeral stream water quality, represented by the two Muddy Creek tributaries, is characterized by high and widely variable conductance and TDS concentrations (ranging from about 560 mg/L to over 3,000 mg/L), and the predominant ions are sodium and bicarbonate. The intermittent stream water quality, represented by Muddy Creek, is characterized by moderate conductance and TDS concentrations (ranging from around 350 mg/L to 1,400 mg/L), and the predominant ions are sodium, sulfate, and bicarbonate. The perennial stream water quality, represented by Little Snake River, is characterized by significantly reduced conductance and TDS concentrations (ranging from around 50 mg/L to 550 mg/L), and the water type is calcium bicarbonate. Note that limited samples were available from the ephemeral tributaries, and the samples that were available tended not to always coincide with the infrequent flood events.

Ephemeral and intermittent channels, as well as the basin's surface, that have periods of no flow accumulate loose material due to weathering, bank caving, livestock and wildlife movement, and wind deposits. This loose material is then readily picked up by the turbulent first flows of a flood event. Once the channels and basin surface have been flushed, then the suspended sediment concentration is dependent upon the magnitude of the runoff event and the erodability of the land surface and stream channel. The relatively high total suspended solids (TSS) concentrations recorded in Muddy Creek flows (concentrations averaging about 6,200 mg/L and a high value of 12,200 mg/L) are indicative of the relatively high percentage of the land surface in the basin that has high or moderate to high runoff potential.

Table 6 presents a summary of all Muddy Creek water quality samples that were available from the State of Wyoming's WRDS database prior to installation of the new USGS Station No. 09258980 in 2004. Constituent concentrations on Table 6 represent the geometric mean of all the respective water quality constituents over the period of record (being 1933, 1976, 1978, 1979, and 1986 through 1993) at 16 separate water quality sampling stations throughout the Muddy Creek drainage basin. The average specific conductance is moderate at 599 micromhos per centimeter (µmhos/cm), pH is slightly basic at 8.2, the TDS concentration is 442 mg/L, and the water is a calcium-bicarbonate type. High TSS (maximum concentration of 22,500 mg/L), coupled with high fecal coliform bacteria concentrations indicate that Muddy Creek would likely require disinfection and filtration if it were to be used as a potable supply. Naturally occurring radionuclides may also restrict the use of Muddy Creek as a drinking water supply. Mean uranium, gross alpha, and gross beta concentrations were 11 micrograms per liter (µg/L), 22 picocuries per liter (pCi/L), and 4.6 pCi/L, respectively. It is important to emphasize that the values in

Table 6 do not necessarily represent the surface water quality at any particular location within the Muddy Creek drainage basin during any particular season of the year, but rather, are the composite representation of Muddy Creek water quality.

Parameter	Unit	Mean [1]	Count	Max	Min
Specific conductance	µmhos/cm	599	128	2,450	324
Total dissolved solids	mg/L	442	31	1,430	227
Total suspended solids	mg/L	144	56	22,500	0.2
Turbidity	NTU	23	86	2,500	1.1
pH	standard units	8.2	137	8.7	7.2
Dissolved oxygen	mg/L	9.0	71	17.6	4.0
Hardness as $CaCO_3$	mg/L	258	134	555	100
Alkalinity as $CaCO_3$	mg/L	182	113	992	83
Calcium	mg/L	76	136	171	22
Magnesium	mg/L	12	136	84	3.9
Sodium	mg/L	15	135	300	0.3
Potassium	mg/L	4.3	135	51	1.6
Sodium adsorption ratio	none	0.43	135	10	0.01
Sulfate	mg/l	116	136	668	1.1
Chloride	mg/L	12	106	359	0.7
Bicarbonate	mg/L	214	135	2729	109
Carbonate	mg/L	1.2	115	47	< 1
Fluoride	mg/L	0.3	100	2.8	< 0.1
Silica	mg/L	15	8	39	5.6
Coliforms, fecal	count/100 mL	78	41	1,650	3
Aluminum, dissolved	µg/L	50 [2]	1	< 100	< 100
Arsenic, dissolved	µg/L	2.0	1	2	2
Barium, dissolved	µg/L	50	1	< 100	< 100
Beryllim, dissolved	µg/L	nm [3]	nm	nm	nm
Boron, dissolved	µg/L	64	5	360	10
Cadmium, dissolved	µg/L	0.5	1	< 1	< 1
Chromium, dissolved	µg/L	0.5	1	< 1	< 1
Cobalt, dissolved	µg/L	nm	nm	nm	nm
Copper, dissolved	µg/L	1.0	1	< 2	< 2
Iron, dissolved	µg/L	51	9	200	< 30
Lead, dissolved	µg/L	0.5	1	< 1	< 1
Mangansese, dissolved	µg/L	21	5	90	< 10
Mercury, dissolved	µg/L	0.25	1	< 0.5	< 0.5
Molybdenum, dissolved	µg/L	8	1	8	8
Selenium, dissolved	µg/L	3	1	3	3
Silver, dissolved	µg/L	0.5	1	< 1	< 1
Uranium, dissolved	µg/L	11	2	16	6.9
Zinc, dissolved	µg/L	10	1	< 20	< 20
Radium 226	pCi/L	0.5	2	1.2	0.17
Gross alpha	pCi/L	22	2	23	22
Gross beta	pCi/L	4.6	2	6.5	3.3

Table 6: Muddy Creek Water Quality (Source: WRDS)

[1] geometric mean

[2] assumed half of detection limits for samples reporting "no detect"

[3] nm = not measured

Various streams in the project areas are identified in WDEQ's 2004 Wyoming 305(b) Water Quality Assessment Report to the USEPA (WDEQ 2004b) as having water quality impairments or threats. Table 7 summarizes the streams and potential problem parameters as listed on Wyoming's 303(d) list of

waterbodies with water quality threats. Threatened or impaired stream segments in and around the ARPA are depicted in the ARDEIS. Impaired or threatened streams in the Little Snake River watershed (HUC 1405003 and 1405004) include portions of Muddy Creek, McKinney Creek, West Fork Loco Creek, Savery Creek, Haggarty Creek, and West Fork Battle Creek. According to the 2004 305(b) report, unstable stream channels and loss of riparian functions threaten aquatic life uses in Muddy Creek and McKinney Creek.

Surface Water	Impairments or Threats	Location	Impairments/ Threats	Use Impaired/ Threatened	Date	Priority
Muddy Creek	Threats	West of State Hwy 789	Habitat degradation;	Non-game fish; aquatic life	1996	Moderate
Muddy Creek	Threats	Above Alamosa Gulch to Littlefield Creek	Habitat degradation	Cold fish; aquatic life	1996	Moderate
McKinney Creek	Threats	Above Muddy Creek to Eagle Creek	Habitat degradation	Cold fish, aquatic life	1996	Moderate

Table 7: 303(d) Waterbodies With Impairments or Threats In the Little Snake River Basin (Source: WDEQ)

Groundwater Resources

Groundwater resources include deep and shallow, confined (artesian) and unconfined (water table) aquifers. The unconfined aquifers are generally shallow, "blanket" type deposits of Quaternary or Tertiary age and are generally found 400 to 600 feet below the ground surface. Artesian aquifers are confined by relatively impermeable rocks and are generally in the deeper formations, such as the Mesaverde. Most of the geologic formations of pre-Oligocene age in the area contain water under artesian pressure (Welder and McGreevy 1966).

The Project Area occurs in the Colorado Plateau and Wyoming Basin groundwater regions described by Heath (1984), the Upper Colorado River Basin groundwater region described by Freethey (1987), or Washakie Basin described by Collentine et al. (1981) and Welder and McGreevy (1966). Groundwater resources include deep and shallow, confined and unconfined aquifers. Site-specific groundwater data for the project area are limited. Existing information comes primarily from oil and gas well records from the Wyoming Oil and Gas Conservation Commission (WOGCC), water-well records from the Wyoming State Engineer's Office (SEO), from the USGS (Weigel 1987), from existing CBNG producing wells, and from three monitoring wells drilled to monitor pressures in producing coals and sandstone zones above and below these coals.

Discharge Water Quality

Groundwater quality is related to the depth of the aquifers, flow between aquifers, rock type and length of time groundwater is in contact with the enclosing rock type. Dissolved mineral content generally increases with time. Circulation in deeply buried aquifers is generally sluggish; as such, many confined aquifers contain slightly saline to very saline water at depth. TDS, an indicator of salinity, is generally less than 2,000 mg/l (slightly saline to saline), with occasional local concentrations of less than 500 mg/l. Elevated TDS is caused by a variety of factors, including evapotranspiration, mixing of adjacent aquifers, the presence of soluble material, and restriction of flow by faults or impermeable formations. Table 8 present composite Mesaverde groundwater results of the three CBNG wells.

Parameter	Concentration[1]	Units
Aluminum	0.045	mg/l
Ammonia	0.9	mg/l
Arsenic	0.0006	mg/l
Barium	0.36	mg/l
Beryllium	<0.002	mg/l
Boron	0.25	mg/l

Parameter	Concentration[1]	Units
Cadmium	<0.0002	mg/l
Chloride	56	mg/l
Chromium	0.002	mg/l
Cobalt	NM	mg/l
Copper	0.03	mg/l
Cyanide	<5	mg/l
Fluoride	1.0	mg/l
Hydrogen Sulfide	NM	mg/l
Iron	3.06	mg/l
Lead	0.004	mg/l
Lithium	NM	mg/l
Manganese	0.102	mg/l
Mercury	<0.0004	mg/l
Nickel	0.041	mg/l
Nitrate	<0.03	mg/l
Nitrite	<0.03	mg/l
Oil & Grease[3]	<1	mg/l
Phenol	65	µg/l
Selenium	<0.005	mg/l
Silver	<0.003	mg/l
Sulfate	11	mg/l
TDS	1,322	mg/l
Uranium	NM	mg/l
Vanadium	NM	mg/l
Zinc	0.3	mg/l
pH	8.2	s.u.
SAR	47.3	<none>
RSC[4]	41	meq/l
Radium 226 + Radium 228	0.9	pCi/l
Strontium 90	NM	pCi/l
Gross alpha	NM	pCi/l

Table 8: Groundwater Quality For Mesaverde Wells In the Project Area

[1] Boron, ammonia, fluoride, and nitrate/nitrite concentrations from 11 Mesaverde groundwater wells (USGS, 1980); remaining concentrations from three Mesaverde CBNG wells in the ARPA.

Vegetation/Wetlands/Invasive Weeds

The Proposed Action is located in the sagebrush steppe plant community typical of the high inter-mountain desert of south-central Wyoming, composed primarily of Wyoming big sagebrush (*Artemisia tridentata* ssp. *wyomingensis*. Greasewood (*Sarcobatus vermiculatus*) is present along the riparian flats adjacent to the ephemeral channels proposed to conduct discharged produced water. Baltic rush (*Juncus balticus*) and other riparian plants are sproadically present in the ephemeral channels.

The riparian vegetation and characteristics of Muddy Creek are described in detail in the ARDEIS (2005).

No known protected-status plants are known to occur where surface disturbance is proposed.

Salt-cedar (*Tamarix* spp.) is known to occur down-stream of the project. How close salt-cedar may be to the project is unknown.

Halogeton (*Halogeton glomeratus*) is present in substantial quantity and over a large extent throughout the project vicinity, mostly on disturbed sites associated with previous oil & gas development.

The project is located within the 85,375-acre Doty Mountain allotment. The season of livestock use extends from April 1 to December 1.

Refer to Cow Creek POD EA (2002) and ARDEIS (2005) for a complete description of the vegetation, wetlands, and invasive weeds in the project vicinity.

Wildlife/Fisheries

There are many species of birds, mammals, amphibians, and reptiles within and adjacent to the project area. Several protected-status species are present or have been sighted in the vicinity, including sage grouse (*Centrocercus urophasianus*), mountain plover (*Charadrius montanus*), and bald eagle (*Haliaetus leucocephalus*). Several other raptor species are known to be present, and several nests are located near the project.

The area provides habitat for a number of large and small predators. Included in this group are mountain lion, bobcat, coyote, badger, red fox, weasel, skunk, and their allies. The area provides habitat for a number of small game and non-game animals. Included in this group are white-tailed jackrabbits, cottontail rabbits, amphibians, reptiles, and rodents. The project area and downstream affected environments provide year-round habitat for these animals.

The proposed facility location provides nesting and rearing habitat for a number of passerine migratory birds as well as foraging habitat for raptor species. The area downstream of the proposed facility location provides nesting and rearing habitat for a number of waterfowl and shorebird species as well as the passerine birds and raptors.

The proposed action occurs within mule deer herd unit 427. According to the WGFD, in 2005 there were approximately 22,500 mule deer associated with this herd unit. The herd unit encompasses approximately 1,843,500 acres and extends to the state border with Colorado. The pipeline associated with this proposed action crosses approximately 4 ¼ miles of mule deer crucial winter range. The pipeline also crosses through a known mule deer migration corridor. Considering the increased amount of human activity present in the area, and the tendency of deer to avoid humans when able to maintain fitness, the project area is currently considered poor mule deer habitat. Mule deer are year round residents of the Muddy Creek drainage downstream of the proposed discharge location.

The proposed action occurs within pronghorn herd unit 438. According to the WGFD, in 2005 there were approximately 12,700 pronghorn associated with this herd unit. The herd unit encompasses approximately 890,700 acres and extends to the state border with Colorado. The pipeline associated with this proposed action crosses approximately 3.9 miles of pronghorn crucial winter range. Considering the increased amount of human activity, the area is currently considered poor pronghorn habitat. Pronghorn are year round residents of the Muddy Creek drainage downstream of the proposed discharge location. This area is transition range for pronghorn antelope, and provides important plant communities necessary to maintain adjacent crucial winter range along Muddy Creek.

BLM Sensitive (6840) Wildlife Species

Raptors

The burrowing owl is a BLM sensitive species known to associate with prairie dog towns. The proposed pipeline crosses through approximately 1 mile of a mapped prairie dog town, which is potential habitat for burrowing owls. Burrowing owls are known to inhabit the area, and there is one record of a burrowing owl nest approximately 2 miles from the proposed pipeline.

The ferruginous hawk is known to occur in the immediate vicinity of the proposed action. There are a total of 5 active and historic nests within 1 mile of the facility location. Three of these nests have been built on in the recent past, and one of them is within 1200 feet of the proposed facility location. Nest sites are generally located in areas of sufficient prey abundance. The area affected by the proposed surface discharge is considered foraging habitat for the ferruginous hawk.

The bald eagle was officially removed from the Federal list of threatened and endangered species on August 8th, 2007. Concurrent with its removal from protection under the ESA, it was immediately considered a BLM sensitive species. The eagle may potentially be found foraging in the area of the proposed action. The bald eagle is likely a year-round resident of the Little Snake River. There is a known bald eagle nest on the Little Snake River approximately 24 miles from the proposed action. The nest was last known to be active in 1996. However, no breeding, nesting, or roosting habitat exists in the area of the proposed action.

Sage grouse

There are 3 known sage grouse leks within 2 ½ miles of the proposed facility location. The East Dad road lek is approximately 1.6 miles directly south of the proposed facility. The East Dad Road lek was last known to be active in 1989 with 40 birds attending the lek that year. An un-named lek was found in 2006, and is located approximately 1.9 miles east-southeast of the proposed facility. The newly identified lek had 4 males strutting in 2006. The Dry Cow #4 lek is located approximately 2.3 miles north of the proposed facility location. The Dry Cow #4 lek had 41 males in attendance in 2006. Given the proximity of these leks, it is highly likely that the sagebrush habitat in the area is nesting and brood rearing habitat for sage grouse. It is well known that early brood rearing habitat also includes riparian areas. As such, it is expected that sage grouse use the perennial systems downstream of the proposed facility location as early brood rearing habitat. The sagebrush habitat in the surrounding area also provides year-long habitat and winter habitat for sage grouse in the area.

Bats

There are four species of BLM sensitive bats that could be expected to occur in the project area. They are the long-eared myotis, fringed myotis, spotted bat, and Townsend's big-eared bat. These species forage in riparian areas. Roosting habitat in the vicinity of the proposed action is limited, and there are no known colonies of bats roosting in the area.

Prairie dog

The proposed pipeline crosses thorough prairie dog towns that were mapped in 2005. The towns were identified as active in 2005 and encompass approximately 500 acres. A field inspection for the pipeline was conducted on August 14th, 2007. During the field inspection 1 prairie dog was observed along the proposed pipeline corridor. There were numerous abandoned burrows, and many had not been used in quite some time. There are no prairie dog issues associated with the facility location.

Waterfowl and Shorebirds

The trumpeter swan, white-faced ibis, and long-billed curlew, are all BLM sensitive species that may occur in the Muddy Creek drainage as well as farther downstream.

Perching birds

The sage thrasher, loggerhead shrike, Brewer's sparrow, sage sparrow, and mountain plover are all BLM sensitive species that may occur in the habitat surrounding the proposed action. All of these species are associated with sagebrush, saltbush, or greasewood habitats which are found within the area affected by the proposed action. Sagebrush provides breeding, nesting, and brood rearing habitat for Brewer's sparrows, sage thrashers, and sage sparrows. The loggerhead shrike can be found breeding and nesting in desert scrub habitat, sagebrush, and greasewood habitat. The mountain plover breeds and nests in Gardner's saltbush, short grass prairies, and open grassland habitats which are found in close proximity to the proposed action.

Threatened and Endangered Terrestrial and Avian Species

Black-footed ferret

The black-footed ferret is listed as an Endangered species under the Endangered Species Act. The proposed action lies within the Dad non-block cleared complex. Non-block cleared habitat is considered by the USFWS to be the only areas in which a wild black-footed ferret could potentially exist. The prairie dog towns that are crossed by the proposed pipeline are either completely abandoned or are at extremely low population densities. They would not support a black footed ferret family group at this time.

Threatened and Endangered Fish Species

Four federally endangered fish species may occur downstream of the proposed action as residents of the Colorado River system: Colorado pikeminnow (*Ptychocheilus lucius*), bonytail (*Gila elegans*), humpback chub (*Gila cypha*), and razorback sucker (*Xyrauchen texanus*) (FWS 2004). All four of these fish species share similar habitat requirements and historically occupied the same river systems. Declines in populations of these species are mainly attributed to impacts of water development (e.g., dams and reservoirs) on natural temperature and flow regimes, creation of migration barriers, habitat fragmentation, the introductions of competitive and predatory non-native fishes, and the loss of inundated floodplains and backwater areas (Minckley and Deacon 1991, FWS 1993).

The last documentation of any of these fish species occurring in the Little Snake River was of a single Colorado pikeminnow in 1990 (Baxter and Stone 1995). Subsequent survey attempts by the WGFD to collect Colorado pikeminnow from this area of the Little Snake River yielded no additional specimens. Critical habitat for these species has not been designated in Wyoming (Upper Colorado River Endangered Fish Recovery Program 1999). These species are not likely to be found in the main stem of the Little Snake River within Wyoming or its tributaries. However, the potential for project-related impacts to tributaries of the Colorado River warrant their inclusion in this NEPA document.

Sensitive Fish Species

Fish species that are not listed as threatened or endangered under the ESA, but may be rare or declining within the state, have been included on the BLM Wyoming Sensitive Species Policy and List (BLM 2002). The intent of the sensitive species designation is to ensure that actions on BLM administered lands consider the welfare of these species and do not contribute to the need to list any of these species under the provisions of the ESA (BLM 2002). Muddy Creek contains one of the few relics of a native fish assemblage that once occupied the majority of the Colorado River Basin from southwestern Wyoming to Mexico. BLM Wyoming sensitive species within the Upper Muddy Creek watershed include the roundtail chub (*Gila robusta*), bluehead sucker (*Catostomus discobolus*), flannelmouth sucker (*Catostomus latipinnis*), and Colorado River cutthroat trout (*Oncorhynchus clarki pleuriticus*) (BLM 2002).

The BLM is a signatory to the "Range-wide Conservation Agreement and Strategy for roundtail chub (*Gila robusta*), bluehead sucker (*Catostomus discobolus*), and flannelmouth sucker (*Catostomus latipinnis*" (UDNR 2006). This agreement establishes the BLM's commitment to implement conservation strategies developed at both the range-wide and state-wide scales for these three species.

Native fishes of the Upper Colorado River Basin (UCRB) have experienced dramatic declines and several extirpations within the last 100 years. Recent status reviews for bluehead sucker, flannelmouth sucker, and roundtail chub have found that these species only occupy approximately 50% of their historical habitat. Declines in the distribution of these species have been associated with the construction of mainstream dams, alteration of river flows and water temperatures, and competition and hybridization with non native fishes (Bezzerides and Bestgen 2002). Muddy Creek contains the largest population of native warm water Colorado River fishes in Wyoming and is one of the only locations where Colorado River cutthroat trout, bluehead sucker, flannelmouth sucker, and roundtail chub occur in the same system.

The Muddy Creek watershed encompasses approximately 1,000 square miles, ranges in elevation from about 6,300 feet to about 8,200 feet, and extends from the Sierra Madre Range to the Red Desert. Muddy Creek is typically divided into two major segments, upper Muddy Creek and lower Muddy Creek (Beatty 2005). Upper Muddy Creek refers to that portion of the watershed upstream of a large headcut stabilization structure located in T17N: R92W, Section 11. Conversely, lower Muddy Creek refers to the section of the watershed below said headcut stabilization structure. Channel substrates in lower Muddy Creek consist predominantly of very fine-grained sediments (sands, silts, and clays; Beatty 2005).

A large wetland complex occurs on the reach of Muddy Creek that lies west of Highway 789 in T16N/R92W. This wetland area (George Dew Irrigated Meadows) consists of impoundments, man-made channels, vertical drop structures, headgate structures for water diversion, overflow spillways, and a braided stream channel network (Beatty 2005). The wetland structures are thought to be barriers to fish movement and other barriers prevent upstream movement into the core population. The fish community within the wetlands is dominated by non-native species (Beatty 2005).

Bluehead suckers, flannelmouth suckers, and roundtail chubs can be found within the Muddy Creek

watershed upstream and downstream of the project area (WGFD 1998, 2004, Beatty 2005, Bower 2005). Relatively little is known about the fish assemblage in Muddy Creek downstream of the proposed discharge location. Beatty (2005) conducted late season sampling and documented that a large proportion of the fish in the lower section of Muddy Creek were non native (e.g., white suckers, fathead minnows, creek chubs, redside shiner, and sand shiner). However, roundtail chubs and flannel mouth suckers have been documented downstream of the proposed discharge location in Muddy Creek. Speckled dace, another native Colorado River basin fish, occurs throughout Muddy Creek and its tributaries. Population estimates for native warm water Colorado River species have never been conducted in lower Muddy Creek and the condition of the population is unknown. In addition, BLM sensitive species occur in the Little Snake River and it is unknown how important or the extent of movement that occurs between fish in the Little Snake River and Muddy Creek.

Research conducted during the summer and fall of 2003 and 2004 within the Muddy Creek watershed found the two most consistent habitat associations among roundtail chubs, bluehead suckers, and flannelmouth suckers to be positive associations with both rock substrates and deep pools (Bower 2005). These areas are most common where pool-riffle sequences are present (Bower 2005). Diets of bluehead sucker and flannelmouth suckers consist primarily of algae and some small invertebrates whereas, roundtail chubs feed on insects and some algae (Baxter and Stone 1995). Native warm water fishes of the Colorado River basin have adapted to survive in highly fluctuating stream environments. Muddy Creek experiences large fluctuations in flow and temperature regimes. Annual flow conditions in Muddy Creek range from 0.07 cfs to 421 cfs and temperatures range from 0.1°C to 28.9°C (http://nwis.waterdata.usgs.gov).

Refer to Cow Creek POD EA (2002) and Atlantic Rim EIS (2005) for a complete description of the wildlife and fisheries in the project vicinity.

Recreation and Visual Resources

The Atlantic Rim area is very popular for dispersed recreational activities such as hunting, camping, hiking, wildlife viewing, OHV use, and sightseeing. The scenic qualities, large amount of unrestricted BLM surface outside of the checkerboard land ownership pattern, abundance of wildlife, and the solitude and primitive nature create a very opportunistic recreational environment attracting recreationists year round. Hunting is the most popular recreational activity in the area. Wyoming Game and Fish reported hunting use in this area as one of the most popular in southern Wyoming. A report of 2004 hunting pressure shows that Deer hunt area 82 pooled a total of 10,488 recreational days during October 1 through 31; Antelope hunt area (with a limited quota) pooled a total of 1,222 from September 1 through October 14. Small game data indicates additional use outside the big game use. Cottontail rabbit pooled a total of 353 user days, and sage grouse pooled a total of 920.

The project is located within Class III Visual Resource Management (VRM). The objective of this class is to partially retain the existing character of the landscape. The level of change to the characteristic landscape should be moderate. Management activities may attract attention, but should not dominate the view of the casual observer. Changes should repeat the basic elements of form, line, color, and texture found in the predominant natural features of the characteristic landscape.

Refer to Cow Creek POD EA (2002) and ARDEIS (2005) for a complete description of the recreation and visual resources in the project vicinity.

Cultural Resources

A cultural resources inventory has been conducted for the area directly impacted by the Proposed Action (water treatment facility and pipeline).

No National Register of Historic Places-eligible sites were discovered where new surface disturbance is proposed. According to a recently-conducted visibility analysis, the project components are either outside the two-mile buffer of contributing segments to the historical trails, or would not be visible from one or more historic trails in the vicinity.

Refer to Cow Creek POD EA (2002) and ARDEIS (2005) for a complete description of the cultural

resources in the project vicinity.

Socioeconomics

Oil & gas development represents an important and significant contributor to the economy of Carbon County and the State of Wyoming. Natural gas production is important for the region and nation as a source of energy.

Refer to Cow Creek POD EA (2002) and ARDEIS (2005) for a complete description of the socioeconomic setting of the Proposed Action.

Health & Safety

Hazards associated with the existing activities in the project area include occupational hazards from construction and development activity, increased traffic on roads, and low-probability events such as rangeland fires.

Refer to Cow Creek POD EA (2002) and ARDEIS (2005) for a complete description of the health & safety setting of the Proposed Action.

Noise

Artificial noise within the project area currently arises from on-going oil & gas operations, vehicle traffic, and jet over-flights at high altitudes. The wind common to this area plays an important role in directing artificially-generated noise and in the background noise present.

Refer to Cow Creek POD EA (2002) and ARDEIS (2005) for a complete description of the noise sources known to occur within the project area.

ENVIRONMENTAL CONSEQUENCES

Environmental Consequences- Proposed Action

Geology/Paleontology

No measurable impacts to geologic or paleontologic resources are predicted.

Climate & Air Quality

The construction and operation of the water treatment facility would have an impact, though immeasurable, on air quality. The impacts would include the addition of dust and vehicle emissions during construction, and the release of various production gases. The airborne pollutant concentrations that would result from emissions at the location and along the access road would meet all Wyoming and federal ambient air quality standards. Likewise, the impact to air quality-related values (visibility, acid deposition, and soils/vegetation) would not be noticeable.

Soils

Approximately 31.9 acres of surface disturbance would directly impact soils. Soil productivity on disturbed areas would be reduced until reclamation is effectively complete. Erosion from the constructed facilities would be controlled by the operator in accordance with the Master Surface Use Plan (Double Eagle 2002).

Water Resources/Wetlands

The Clean Water Act of 1987, as amended (33 U.S.C. 1251), established objectives to restore and maintain the chemical, physical, and biological integrity of the nation's water. The act also requires permits for point source discharges to navigable waters of the United States and the protection of wetlands, and includes monitoring and research provisions for protection of ambient water quality. Wyoming Water Quality Regulations implement permitting and monitoring requirements for the Wyoming

Pollutant Discharge Elimination System (WYPDES), operation of injection wells, groundwater protection requirements, prevention and response requirements for spills, and Water Quality Standards for Salinity in Colorado River System as recommended by the Colorado River Basin Salinity Control Forum and adopted by the State of Wyoming, Department of Environmental Quality.

The water quality of the treated produced water would meet or exceed WDEQ criteria at the end of pipe, as required under the approved WYPDES permit. This water would be discharged directly to Muddy Creek in the ephemeral segment between the George Dew and Red Wash wetlands. Recent analysis by the BLM-RFO of waters discharged into ephemeral channels showed that salt loading of discharge water can occur (i.e., increases in TDS, SAR, and other mineral constituents). The treated discharge water will likely change in quality downstream, but to what extent is uncertain.

The produced water discharge will contribute a relatively small proportion of the total flow to the Muddy Creek system during wet periods of the year and will thus have minimal impact on channel morphology. Likewise during the low-flow periods, the channel capacity should be sufficient to accommodate the discharge volume without significant channel degradation.

During low flow periods (July-September) lower Muddy Creek can become intermittent and be characterized by many discontinuous pools forming along the thalweg. With the proposed discharge of 1.27 cfs, discontinuous pool formation would likely not occur thereby changing the natural intermittency and variability of the system downstream of the discharge point.

Vegetation//Invasive Weeds

Vegetation

Construction of the water treatment facilities and pipeline would result in the short-term disturbance of approximately 31.9 acres of surface area. The range site carrying capacities in the Doty Mountain allotment are generally low (~9-11 acres/animal-unit month (AUM)), and it is predicted that less than approximately three AUM (~780 pounds, air-dry) of forage would be lost during construction operations.

Invasive Weeds

The disturbance associated with construction activities may result in the subsequent infestation of project-related disturbances by Halogeton, which is present on adjacent disturbances in the Cow Creek/Catalina Unit area.

The Proponent will be required to control weed infestations arising from their operations; the identification and monitoring of salt-cedar populations (if present) would be necessary to determine if the Proposed Action results in the spread of salt-cedar.

Wildlife/Fisheries

Terrestrial and Avian Wildlife

The project is located near sage grouse leks, mule deer crucial winter range, and raptor nests, but outside the Controlled Surface Use areas for sage grouse leks. Seasonal restrictions will be applied to avoid potential effects to these protected species and habitats.

The short term impacts from the proposed action would include displacement of wildlife from the immediate area of the proposed facility location during the construction of the site facility. However, given the proximity of the location to existing activity in the project area, the likelihood of displacement and associated amount of impact is small. There is also a possibility of direct mortality of small game and non-game species that could not avoid the construction activity and are crushed or otherwise killed during the construction of the site facility.

There are some potentially beneficial impacts from the proposed action to wildlife. If the water that will be produced is of sufficient quality such that it will provide drinking water for terrestrial wildlife, the additional source of perennial water could result in beneficial impacts to wildlife for the period of time the

water is discharged. However, the expected life of this project is ~20 years. Upon completion of the project water would no longer be available and wildlife that used the effluent would revert back to other water sources. Another potential benefit would be the potential for improvement of the associated riparian areas. The addition of 1.27 cfs of water on a perennial basis would likely increase the general vigor of the associated riparian areas. This in turn would provide more potential forage for grazing animals and increase the nesting opportunities for migratory birds. However, this improvement of the associated riparian habitat would likely be temporary due to the eventual completion of the project and subsequent return of the water system to previous conditions.

The short term impacts for BLM sensitive species would include displacement during construction operations, however most of the BLM sensitive species would not be present during the time of construction.

Timing restrictions for grouse nesting and brood rearing habitat would be imposed for the construction of the project so that construction would not adversely affect grouse during this critical time of year. However, grouse could be in the immediate vicinity of the project and would likely be displaced by the construction activities at any time of the year.

Timing restrictions would also be in place to protect ferruginous hawk nesting. However, there would be a 5 acre loss of foraging habitat for the hawks in the area. Also, the proposed facility is located within the 1200 ft Controlled Surface Use buffer of an active ferruginous hawk nest. Active, in this instance, indicates that the nest has been considered as a potential nesting site by the hawks in recent years, and has been built up in preparation for nesting. However, no actual egg laying attempts have been documented at the site for more than 7 years. However, this particular proposed action would not result in short term adverse impacts to the ferruginous hawk nor would it result in a take under the Migratory Bird Treaty Act. This is because of the proximity of the proposed location to currently high human activity levels, and that the hawks have chosen not to nest (lay eggs) at the location that is within 1200 feet of the proposed site facility for the last 7 years.

There are no expected short term impacts to the bald eagle or the black footed ferret from the construction phase of the proposed action.

The reasonably foreseeable long term impacts from this proposed action are associated with the produced effluent and the perennial systems downstream of the discharge points. Many variables of concern with produced water have not been fully explored. There have been a number of potentially harmful or fatal substances identified in CBM produced water. Threshold concentrations have been identified for many of these substances, and if these levels are exceeded detrimental impacts to individuals and populations would occur. Some of these impacts include genetic mutation, loss of endocrine function, cancer, anemia, embryonic malformation, sterility, and general loss of vigor and fitness, to name a few. Many of these substances such as ammonia, boron, cyanide, selenium, and phenol have been tested for in local surface waters, and in test wells from the same aquifer (Mesa Verde formation) that the proposed action would produce water (refer to Tables 5, 6, and 8).

Selenium is a metal that has the potential to bio-accumulate in the environment. Several scientific experts on selenium have recommended a 2 µg/L criterion because concentrations exceeding 2 µg/L may create a bioaccumulation risk for fish and sensitive species of aquatic birds (Hamilton 2002, Skorupa and Ohlendorf 1991; Lemly 1993). Discharge of produced water containing selenium greater than 2 µg/L also can result in impacts to fish and aquatic birds inhabiting downstream receiving waters (Ramirez, 2005). Top level consumers in aquatic systems, such as waterfowl can readily accumulate selenium concentrations leading to low reproduction, embryonic deformities and increased mortality (Ohlendorf et al. 1988). A recent water quality test (08/2007) from produced water in the area of the proposed action indicated that selenium levels are currently less than 1 µg/L. However, constituent levels may change over time with produced water from the same location. The WYPDES permit authorizing surface discharge of this effluent allows 9 µg/L of selenium. It is also known that there are current concentrations of selenium in Muddy Creek which are above the recognized recommendations.

Bald eagles forage on fish, upland terrestrial species, and carrion. The species of forage fish that are likely to inhabit this stretch of the Little Snake River and Muddy Creek are rainbow trout, round-tail chub, flannelmouth sucker, white sucker, bluehead x white sucker, common carp, and channel catfish. There

are other fish species that occur as well, but they are not of sufficient size to be forage for bald eagles. If fish abundance or species distributions are adversely affected by the proposed action, adverse indirect impacts to bald eagle may occur.

The proposed action occurs within the Dad complex of "non-block cleared" black-footed ferret habitat. The USFWS has defined "non-block cleared" areas as having the potential for ferret occupation. Within these large tracts of "non-block cleared" habitat there are scattered prairie dog towns. It is these towns that provide the actual habitat for black footed ferrets. A field site inspection was conducted on August 14th, 2007 and a single prairie dog was observed. The burrow was just off the existing disturbed right-of-way. There were numerous old and abandoned prairie dog burrows in the area, but current populations were extremely low. The prairie dog populations associated with the towns do not appear to be sufficient to support a ferret family group. There have been a number of black footed ferret surveys performed around the area of the proposed action, and there have been no ferrets or their sign observed. Therefore it has been determined that this proposed action would have "No Effect" on black footed ferrets.

Reduction of available forage and useable habitat is expected to correspond with the extent of surface disturbance planned under this alternative.

Fisheries

Threatened and Endangered Fish Species

The primary issue of concern to downstream T&E fish species associated with surface discharge of CBNG produced water is the potential for the produced effluent to contain constituents that are known to be harmful to aquatic ecosystems. It is likely that any harmful substances would become highly diluted before reaching any downstream waters where these species occur. Increases in water quantity would also occur from surface discharge of produced water. Depending on the quantity of water, this could have a beneficial or negative impact to downstream T&E species. However, the volume of water associated with this project would be insignificant when considering the volumes in the system were these species are known to occur (i.e., Little Snake and Yampa rivers). Critical habitat for these species has not been designated in Wyoming (Upper Colorado River Endangered Fish Recovery Program 1999). These species are not likely to be found in the main stem of the Little Snake River within Wyoming or its tributaries. If any of these species are identified within the downstream portion of Muddy Creek or immediately downstream in the Little Snake River, the BLM would consult with the FWS and develop a protection plan for the fish. Based on this information, the Section 7 Endangered Species Act (ESA) determination for Colorado pikeminnow, bonytail, humpback chub, and razorback sucker is "May Affect but Not Likely to Adversely Affect" (See Appendix C for a detailed analysis of dilution and ESA consultation for the project).

Sensitive Fish Species

Under the proposed action, CBNG produced waters would be directly discharged into Muddy Creek, a tributary of the Little Snake River in the Colorado River Basin. The confluence of Muddy Creek and the Little Snake River occurs near Baggs, Wyoming approximately 42 river miles downstream of the proposed discharge location. Potential impacts from the proposed action would include increased erosion, altered chemical composition of streams, bioaccumulation of chemicals toxic to aquatic biota, alteration of water temperature, and alteration seasonal flow regimes. Long term impacts would result in the alteration of the natural aquatic ecosystem including changes in channel morphology and the local water table, and alteration of the aquatic community or loss of species.

Produced water would be treated to meet the requirements of the WYPDES permit WY0054038 and Colorado River salinity standards. However, several deleterious substances have been identified in typical CBNG produced water that would not be treated or are not required to be monitored. Potential impacts to fisheries from water quality parameters associated with effluent from the proposed action include mortality, lowered reproductive success or complete reproductive failure, slowed growth, deformities, and general edema. However, the effects that water quality parameters from the proposed action would have on fish assemblages in Muddy Creek and its tributaries is uncertain. Acute Whole Effluent Toxicity (WET) tests of the effluent would be required to determine the toxicological effects on aquatic life, and are required by the WYPDES permit from water collected end-of-pipe. Species typically used for WET tests may be more tolerant than the BLM sensitive species and therefore WET tests may not accurately detect

impacts and would not detect impacts from long-term exposure to effluent.

Water quality parameters have been tested from the production aquifer (Mesa Verde formation) and surface water in the project area and are identified in Tables 5,6, and 8. Substances/properties from this list that have been identified as potentially harmful to the aquatic environment include ammonia, arsenic, barium, boron, chromium, copper, cyanide, iron, manganese, mercury, nickel, phenol, silver, zinc, TDS, and salinity. In addition, there are other substances that could potentially occur in the CBNG produced water that have not been identified. For a comprehensive list of toxicological benchmarks for aquatic biota refer to Sutter and Tsao (1996).

It is also possible that the produced water (treated to less than or equal to 500 mg/L TDS) would gather salts while traveling along its flow path. The amount of salt accumulation is uncertain (i.e., tons/year), and so this impact can be generally predicted, but not easily quantified. Relatively minor changes in salinity levels have the potential to alter the structure and composition of a fish assemblage (Ostrand and Wilde 2001; Higgins and Wilde 2005) Exposure to elevated salinity levels such as sodium bicarbonate ($NaHCO_3$), the major salt associated with CBNG produced water, can result in decreased survival, fecundity and in some cases death. Laboratory tests on fathead minnow *Pimphales promelas* (a relatively salt tolerant species) to determine acute toxicity of salts resulted in 96-h LC50 values of $KHCO_3$ (<510mg/L), $NaHCO_3$ (<850mg/L), KCL(<880mg/L), and K_2SO_4 (<850mg/L;Mount et al. 1997). Aquatic invertebrates are also sensitive to increases in salinity, with adverse effects appearing in some taxa at 1,000 mg/L TDS. The most sensitive of the invertebrate taxa are benthic invertebrates such as stoneflies, mayflies, caddisflies, and dragonflies (Hart et al. 1991).

Alteration of the natural flow regime through increased perennial flow from surface discharge of CBNG produced water is also a concern. Potential negative effects to fish and invertebrates caused by changes in flow regimes include physical, behavioral, habitat and diet changes, and alteration of species composition.

BLM sensitive fish that inhabit the Muddy Creek watershed are frequently exposed to disturbances from floods and droughts and have evolved to survive environments that are characterized by fluctuating flows. It is uncertain how far downstream the proposed continuous discharge rate of 1.27 cfs would continue down Muddy Creek. However, field visits to Muddy Creek downstream of the proposed discharge location in September and October of 2007 suggest return flows from the wetlands into Muddy Creek have created and connected pools in the adjacent stream channel. This information suggests that discharged water could influence the hydrograph for a relatively long distance downstream in Muddy Creek. Increases in flows could also reconnect isolated pools that are thought to be an important component of the life history requirements of BLM sensitive species.

Base flow and intermittency commonly occur from July through September, but can occur as early as April (Goertler 1992). The proposed surface discharge would more than triple the mean flow during low flow periods. Augmentation of water quantity would likely increase the amount of available fish habitat and result in a more stabilized hydrograph. However, stable stream conditions would be most beneficial to non-native fish species and likely have an adverse impact on native BLM sensitive species adapted to fluctuating conditions. Competition and hybridization with non-native species has been attributed to the decline of these species (Bezzerides and Bestgen 2002).

Alteration of water temperatures caused by surface discharge could effect fish communities by altering food sources, feeding patterns, habitat preferences, species composition, and migratory behavior. There could also be physiological effects, the extent of which is largely unknown.

Temperatures of the proposed surface discharge are unknown, but would likely remain a relatively constant temperature. Under the proposed action, produced water that travels through a pipeline into Muddy Creek would be warmer in the winter and cooler in the summer than surface water temperatures in Muddy Creek. This effect would be most pronounced near the point of discharge and would decrease as the produced water mixes with surface water in Muddy Creek and adjusts to atmospheric conditions downstream.

Addition of constant-temperature CBNG produced water may alter fish behavior and reproduction by disrupting natural environmental cues (Davis et al. 2006). These effects would be most pronounced

closest to the point of discharge where temperature gradients would be most severe. Studies of produced water from CBNG wells within the Powder River basin suggest that additions of produced water to perennial or ephemeral stream channels alter temperature regimes. For example, CBNG produced water temperatures in the Powder River basin are warm enough to disrupt surface freezing that would normally occur in the Powder River, Wyoming (Davis et al. 2006). Although native BLM sensitive fish species of the Colorado River have adapted to highly fluctuating water temperatures, it is unknown what the direct and indirect effects of CBNG produced surface water discharge and altered temperature regimes would have on the species.

Bioaccumulation of harmful water quality constituents downstream of the discharge area could have a negative impact to fish and wildlife species by elevating the environmental toxicity past the tolerable threshold of the organism. Of particular concern is the bioaccumulation of selenium. Toxicity levels of selenium to aquatic organisms is variable and depends on concentration, form, type of organism and life stage, period of exposure and environmental factors (e.g., water temperature, water hardness and presence of other constituents). Although the literature suggests a wide range of tolerance levels for aquatic organisms several recommendations for maximum total selenium concentrations have been made. A CBNG produced water report done for the Powder River Basin states "The WDEQ aquatic life chronic criterion of 5 µg/L of selenium is not adequate for preventing adverse effects on fish and aquatic birds." Other research on selenium levels has suggested a 2 µg/L criterion because concentrations exceeding 2 µg/L may create a bioaccumulation risks for fish and sensitive species of aquatic birds (Hamilton 2002, Skorupa and Ohlendorf 1991; Lemly 1993). Sorensen (1988) also reported substantial impacts and mortality to fish at selenium concentrations of 5 µg/L. Selenium concentrations as low as 2µg/L were reported to have chronic toxicity effects on invertebrates (Crane et al. 1992).

The average concentration of selenium in Muddy Creek is ~4.4 µg/L with a range of 1.3-13.5 µg/L (http://waterdata.usgs.gov). The WYPDES permit authorizing surface discharge of this effluent allows for 9 µg/L of selenium. Water quality tests have indicated that the proposed effluent would have less than 1 µg/L of selenium. Selenium levels in Muddy Creek are typically above 1 µg/L and therefore the proposed effluent would likely benefit fish through dilution of selenium. However, the WYPDES permit allows for 9 µg/L of selenium and if effluent was discharged at this concentration, selenium levels would be elevated when ambient concentrations were below 9 µg/L of selenium in Muddy Creek. (See Appendix C for a detailed dilution analysis).

Increased erosion is another potential impact that could negatively affect BLM sensitive fish species and their habitat. The amount and potential for increased erosion under the proposed action is uncertain. Pool and run habitats with abundant hard substrates (e.g., cobble and gravel) in the Muddy Creek watershed have been identified as important habitat for warmwater BLM sensitive fish species (Beatty 2005; Bower 2005). Increased sediment delivery to stream bottoms can embed gravels and reduce spawning success via decreased embryo survival fill in rearing pools, and reduce complexity of the habitat in stream channels (Magee et al. 1996). Deposition of sediment can also decrease populations and species composition of aquatic macroinvertebrates that are highly dependent on interstitial spaces for different life stages. These community changes can be detrimental to fisheries that depend on macroinvertebrates as primary food supplies and can change the abundance and diversity of the fish population. Loss of these stream attributes would threaten the persistence of BLM sensitive fish species.

There are numerous uncertainties associated with the extent and significance of impacts to BLM sensitive fish species associated with the proposed action. Based on the information provided above, it is reasonable to assume that impacts from the proposed action would have a negative effect on BLM sensitive fish species through alterations to the natural hydrograph, water temperatures, and water quality and potentially contribute towards the listing of these species under the provisions of the ESA.

Recreation and Visual Resources

The Proposed Action will affect recreational use and experiences in the immediate area and affect the recreational setting within and around the viewshed surrounding the project area. Visual resources will be impacted due to the introduction of contrasting elements of form, line, color, and texture against the natural elements. These new elements will direct observations away from the natural surroundings to the project area, which deviates away from VRM Class III objectives. The contrasting visual elements would be minimized by following the BMPs listed in ARDEIS (BLM 2005) Appendix H. Such mitigation would

include painting above ground facilities, re-contouring during intermediate and final reclamation, and utilizing specific revegetation seed mixtures for disturbances.

Cultural Resources

Eligible cultural resources will be avoided where surface-disturbing activities are proposed, and so no impacts to cultural resources are expected as a result of construction.

If any cultural artifacts or materials are located during project construction activities, work will stop and the Authorized Officer of the BLM will be notified.

Socioeconomics

The activity associated with the Proposed Action would result in additional wage-earning revenue for workers participating in development activities, and potentially additional royalties, taxes, and other benefits to Federal, State, and local governments.

Surface-disposal of produced water may prove to be economically advantageous to the Proponent, relative to continued use of disposal by reinjection. The RFO does not have any information with which to make this judgment, however.

Health & Safety

There would be some increased risk caused by the Proposed Action. Risks include higher vehicle accident potential due to increased traffic, as well as the normal hazards to industry workers from construction operations.

Hazardous Substances/Wastes

The Proponent has indicated in their Sundry Notice that hazardous substances will be used in water treatment facility operations. The term "hazardous materials" as used here means: 1) any substance, pollutant, or contaminant (regardless of quantity) listed as hazardous under the Comprehensive Environmental Response, Compensation, and Liability Act (CERCLA) of 1980, as amended, 42 U.S.C. 9601 et seq., and the regulations issued under CERCLA; 2) any hazardous waste as defined in the Resource Conservation and Recovery Act (RCRA) of 1976, as amended; and 3) any nuclear or nuclear byproduct as defined by the Atomic Energy Act of 1954, as amended, 42 U.D.C. 2011 et seq.

The Proponent will be required to comply with the Hazardous Materials Management Summary provided in the Atlantic Rim Natural Gas Development Project Final EIS (ARFEIS), Appendix C of the FEIS. This would include compliance with applicable laws, rules, and regulations. The Proponent would be required to provide a contingency plan to the RFO to address accidental releases of hazardous substances, produced water, and/or hydrocarbons.

Depth to groundwater is estimated to be less than 50 feet bgs. The water treatment facility is located approximately 500 feet from the flowing water in the channel to the west, above the LSRCD reservoir. Should accidental releases of hazardous substances, produced water, and/or hydrocarbons occur, adverse environmental impacts may occur.

Impacts to soils, surface and groundwater resources, wildlife, vegetation, and human health could result from the accidental release of hazardous materials. Since the project operation would be designed to comply with all applicable federal and state laws concerning hazardous materials, no impacts are anticipated.

Noise

The Proposed Action would increase noise levels in the immediate area during construction and water treatment operations. Construction activities and associated increased noise levels would be temporary, lasting as long as the construction activities were ongoing. At the treatment facility, operations noise would occur for the duration of operations.

EPA has established a level of 55 dBA as a guideline for acceptable environmental noise. A noise level of 60 dBA is generated between two people engaged in normal conversation standing five feet apart. Anticipated background noise levels in rural areas is anticipated to be approximately 40 dBA. Given that the project vicinity is subject to frequent winds, the natural noise levels in the project area may approximate 50 dBA during the daylight hours. Wind typically adds 5 to 10 dBA. Damage to the unprotected human ear can occur at noise levels of 115 dBA and above. The 55 dBA EPA standard represents very low noise levels and indicates the level below which no environmental effects could reasonably be expected.

Based on an average noise level of 85 dBA measured at 50 feet from a typical construction site, the expected noise levels would be 85 dBA at 50 feet, 65 dBA at 100 feet, 59 dBA at 500 feet, 55 dBA at 1,500 feet, and 53 dBA at 2,000 feet from the construction equipment. Therefore, an area of somewhat less than 288 acres around the project site would temporarily experience noise levels in excess of the EPA standard. An area of approximately 72 acres around the project location would experience temporary noise levels in excess of those associated with normal human conversation. The absence of any residence or human receptor likely to experience extended noise levels associated with this development under the Proposed Action limits potential impacts due to temporary and intermittent increases in noise levels for the duration of drilling and construction activity.

Impacts to wildlife from project-related noise are addressed in this section titled "Wildlilfe/Fisheries."

Environmental Consequences- No Action Alternative

Under the No Action alternative, the construction, installation, maintenance, and use of the proposed water treatment facility, water transport pipelines, and discharge points would not be authorized. Surface discharge of produced water from this proposal would not be authorized. As such, no additional direct or indirect impacts to human health and the environment would occur. On-going natural gas development would continue to occur, reinjection of produced water would continue, and future actions would be considered as submitted by proponents in the project area.

Analysis of reinjection in the AREIS has already considered impacts from depletion of water-contributing formations through CBNG development.

Environmental Consequences: Cumulative Impacts

Cumulative impacts are those impacts to the environment resulting from incremental impacts of an action when added to past, present, and reasonably foreseeable future actions. The Cumulative Impacts Assessment Area (CIAA) for the Proposed Action and alternatives is primarily the HUC-12 watersheds inclusive of the project. Although the domain used for a CIAA typically varies by resource or jurisdictional boundary, the predicted impacts from the Proposed Action and alternative actions are expected to be fairly local in scope, with the exception of effects from produced water discharge at the surface. In addition, where impacts are expected to be un-measurable, cumulative impacts analysis may serve to only document existing impacts within a CIAA.

Due to the elapsed time and on-going activities within the CIAA since the original EA, the cumulative impacts analysis was updated for this EA.

New surface disturbance arising from construction operations would be located within the Dry Cow Creek, Muddy Creek – Antelope Creek, and Muddy Creek – Blue Gap Draw HUC-12 watersheds. These 3 watersheds are equal to 43,178 acres, 37,342 acres, and 28,029 acres in size, respectively.

Cumulative Impacts- Existing Setting

Within the CIAA, primary existing and reasonably foreseeable activities include oil & gas development (existing exploratory PODs and proposed development PODs associated with the Atlantic Rim Natural Gas Development Project and Continental Divide – Creston Project), livestock production/grazing, and hunting & other recreation activities. There is a single public road leading into the project area. Primary landscape-scale perturbations have arisen from oil & gas development activities. There are a number of

unquantified impacts to Muddy Creek. For a complete description of the potential cumulative impacts to the Muddy Creek drainage from oil & gas activities, refer to the analysis in the AREIS (see Page 5-11, FEIS).

There are 82 wells producing, shut-in, or in the process of being drilled within the Hydrologic Unit Code (HUC) 12-level watershed (Dry Cow Creek) in which the majority of the project is located (*Figure 4*). There are, in addition, 143 approved APD's (not yet drilled) on file at the Wyoming Oil & Gas Conservation Commission as of June 2007. In total, then, there are 225 existing and reasonably foreseeable APDs in the primary watershed.

The ARFEIS provides a disturbance goal of 6.5 acres of short-term surface disturbance for each well location within the AREIS area.

Using an assumption of 6.5 acres of disturbance per well, the 225 existing and reasonably foreseeable wells would result in a total cumulative oil & gas development disturbance (short-term) of 1,462.5 acres within the primary watershed. This equals approximately 3.4% of the 43,178-acre watershed area. Undoubtedly, some unknown proportion of the existing wells has had reclamation initiated or even successfully completed for production operations.

The expected disturbance in this analysis is slightly lower than that predicted by four site-specific EAs completed for 7 CBNG PODs that have, to-date, been authorized within the CIAA. The PODs and disturbance areas shown in Table 9 were analyzed in these EAs:

		Acres Disturbance		
POD Name(s)	# Wells	Total	Per-Well	EA Number
Catalina A & B	40	220.4	5.2/6.1	WY-030-07-EA-186
Sun Dog A & B	51	218.6	4.2/4.4	WY-030-07-EA-222
Sun Dog C	14	43.1	3.5	WY-030-07-EA-231
Sun Dog D & E	34	146.8	5.2/4.2	WY-030-07-EA-232

Table 9: BLM-Authorized AREIS PODs

This EA uses the most-recent available data from the WOGCC (for all estate ownerships) to predict the number of APDs within the CIAA. However, this data may not exactly be identical to the APD submissions that the BLM has received (only for actions involving federal mineral or surface estate).

Within the CIAA, other known oil & gas projects include the Continental Divide – Creston EIS (6,000 wells) and the Atlantic Rim EIS (2,000 wells). The wells analyzed in the CIAA are all within the AREIS area.

Cumulative Impacts- Proposed Action

In total, the approval of this project would add approximately 31.9 acres of construction-related surface disturbance to the area. This represents approximately a 2.2% increase in extant surface disturbance within the CIAA's primary watershed, and corresponding .changes in forage availability and soil productivity.

Incremental increases in measurable impacts to soils, vegetation, invasive weed infestations, terrestrial wildlife, recreation, and noise are expected, but would be small.

Cumulative impacts to water resources (and obligate aquatic wildlife) for the Proposed Action have the potential to yield impacts over a larger area. For this alternative, the CIAA for water resources and aquatic wildlife has been expanded downstream to the confluence of Muddy Creek and the Little Snake River. The rationale for choosing this CIAA is that the impacts from the Proposed Action would likely not be measurable upon reaching the Little Snake River, as the size of the River may eliminate measurable incremental impacts. This, of course, depends upon the receiving waterbody flows; the Little Snake River would be receiving any flow discharged from the Proposed Action, less evaporation and infiltration (some infiltration would be conveyed by subsurface, potentially re-emerging in a surface tributary to the Little Snake River).

Cumulative Impacts Assessment

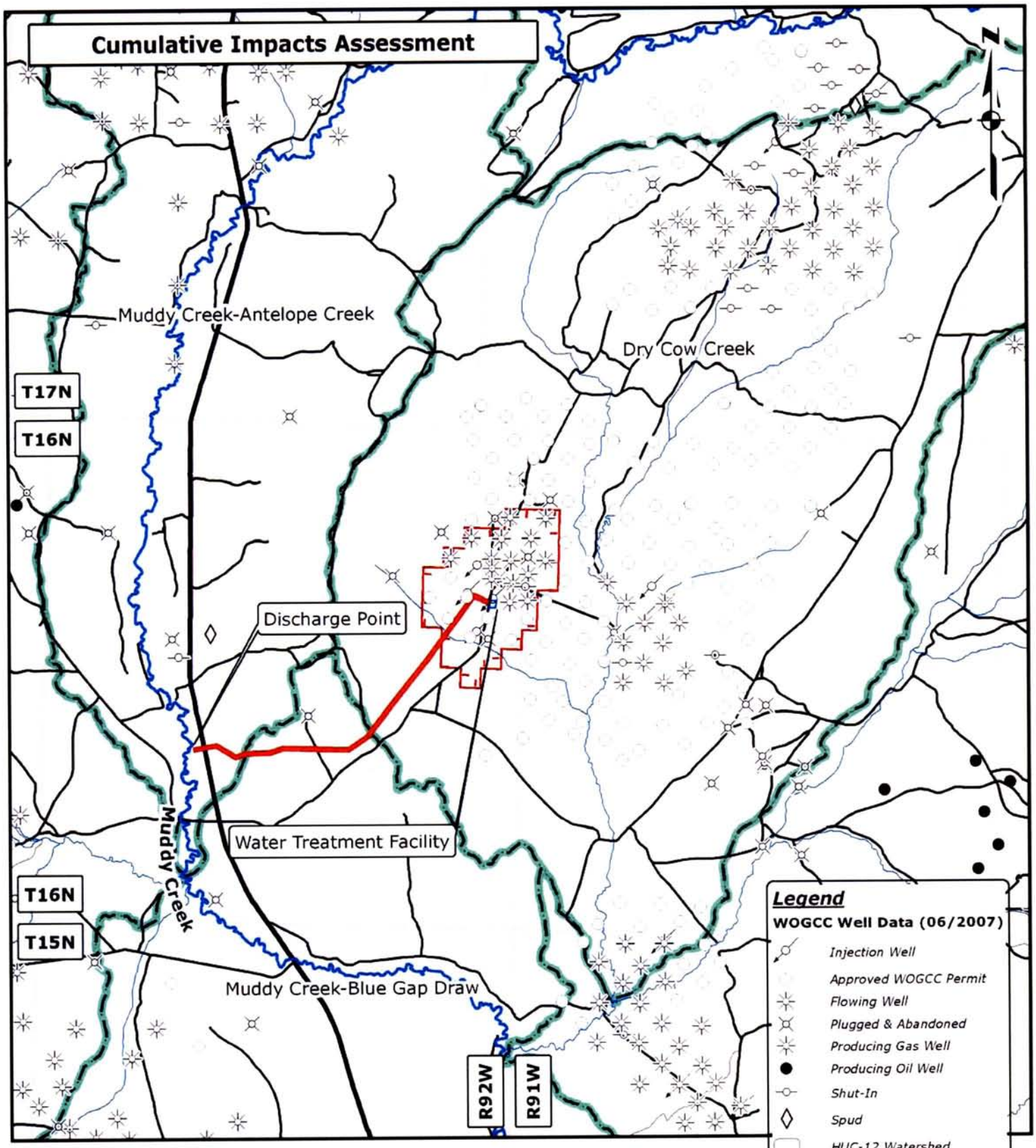

U.S. Department of the Interior
Bureau of Land Management
Rawlins, Wyoming

0 1 2 4 Miles

1 inch equals 1.6 miles
1:100,000

Drafted By: TDB 11/07/2007

The BLM can not guarantee the accuracy of these data.

Another authorized discharge from the existing development in this area is occurring seasonally under the modified WYPDES authorization #WY0042145. This authorization allows for up to 0.28 cfs to be discharged seasonally during the months of August – November below the LSRCD reservoir. In 2006, the proponent initiated these discharges. This flow, when discharged, would cumulatively result in up to approximately 1.6 cfs of produced water when added to the Proposed Action.

Cumulative Impacts- No Action Alternative

Under this alternative, no additional impacts would be created; existing development and activities would remain, and future activities from oil & gas development are likely to occur.

Consultation and Coordination

As previously discussed, the RFO has consulted with the WDEQ regarding this project, including the conduct of a field visit to the location of the Proposed Action. In addition the RFO has consulted, formally or informally, with the following organizations or agencies:

- Double Eagle Petroleum Company (Casper, Wyoming): proponent
- Wyoming Department of Game & Fish (Cheyenne, Wyoming): State agency
- U.S. Fish & Wildlife Service (Cheyenne, Woming): Federal agency

The BLM-RFO Interdisciplinary Team (IDT) prepared this EA, conducted field reviews and data gathering, and consulted with the above entities.

- Travis Bargsten, Natural Resource Specialist, Project Lead
- David Simons, Environmental Planner
- Andy Stone, Hydrologist
- Patrick Lionberger, Fisheries Biologist
- Andy Warren, Rangeland Management Specialist
- Paul Rau, Recreation Planner
- Rhen Etzelmiller, Biologist
- Nina Trapp, Archaeologist
- Mark Newman, Geologist
- Susan Foley, Soil Scientist
- Jerry Dickinson, Petroleum Engineer

References & Citations:

- Baxter, G. T., and M. D. Stone 1995. Fishes of Wyoming. Wyoming Game and Fish Department. 290pp.

- Beatty, R. J. 2005. Catostomid Spawning Migrations and Late-Summer Fish Assemblages in Lower Muddy Creek, an Intermittent Watershed in Southern Carbon County, Wyoming. Laramie, Wyoming: M.S. Thesis, Department of Zoology and Physiology, University of Wyoming.

- Bezzerides, N. and K. Bestgen 2002. Status Review of Roundtail Chub (Gila robusta), Flannelmouth Sucker (Catostomus latipinnis), and Bluehead Sucker (Catostomus discobolus) in the Colorado River Basin 2002. Fort Collins, Colorado: Colorado State University Larval Fish Laboratory.

- BLM, 2002a. Cow Creek POD Environmental Assessment.

- BLM, 2002b. BLM Wyoming sensitive species policy and list, September 20, 2002. Bureau of Land Management, Cheyenne, Wyoming. U.S. Department of the Interior, Bureau of Land Management. 14pp.

- BLM, 2005. Draft Environmental Impact Statement for the Seminoe Road Natural Gas Development Project.

- BLM, 2005. Draft Environmental Impact Statement for the Atlantic Rim Natural Gas Development Project.
- BLM, 2006. Final Environmental Impact Statement for the Atlantic Rim Natural Gas Developoment Project.
- Bower, M.R. 2005. Distributions and Habitat Associations of Bluehead Suckers, Flannelmouth Suckers, and Roundtail Chubs in the Upper Muddy Creek Watershed of Southern Carbon County, Wyoming. Laramie, Wyoming: M.S. Department of Zoology and Physiology, University of Wyoming.
- Crane, M., T. Flower, D. Holmes, and S. Watson. 1992. The toxicity of selenium in experimental freshwater ponds. Arch. Environ. Contam. Toxicol. 23: 440-452 (Cited from USEPA 1995).
- Davis, W.N., R.G. Bramblett, and A.V. Zale. 2006. The effects of coalbed natural gas activities on fish assemblages: A review of the literature. Montana Cooperative Fishery Research Unit, Fish and Wildlife Management Program. Montana State University, Bozeman Montana.
- DOE, Office of Environmental Management, Lockheed Martin Energy Systems, INC. Suter II, G. W. and Tsao C. L. 1996. Toxicological Benchmarks for Screening Potential Contaminants of Concern for Effects on Aquatic Biota. Office of Science and Technical Information.
- Double Eagle Petroleum Company, 2002. Cow Creek POD Master Surface Use Plan.
- EMIT, 2006. Applications Bulletin: CBM Produced Water Purification.
- FWS 1993. Colorado River Endangered Fishes Critical Habitat. Draft Biological Support Document. Salt Lake City, Utah: U.S. Department of the Interior, Fish and Wildlife Service.
- Hamilton SJ. 2002. Rationale for a tissue based selenium criterion for aquatic life. Aquat Toxicity 57: 85-100.
- Hart, D.D., B.D. Clark, and A. Jasentuliyana. 1996. Fine-scale field measurement of benthic Flow environments inhabited by stream invertebrates. Limnology and Oceanography. 41: 297-308.
- Higgins, C.L., and G.R. Wilde. 2005. The role of salinity in structureing fish assemblages in a prairie stream system. Hydrobiologia. 549:197-203.
- Lemly, A.D. 1993. Guidelines for evaluating selenium data from aquatic monitoring and assessment studies. Environmental Monitoring Assessment 28:83-100.
- Magee, J.P., T.E. McMahon, and R.F. Thurow. 1996. Spatial variation in spawning habitat of cutthroat trout in a sediment-rich stream basin. Transactions of the American Fisheries Society 125: 768–34 779.
- Minckley, W. L. and J. E. Deacon 1991. Battle Against Extinction: Native Fish Management in the American West. University of Arizona Press.
- Mount D.R., P.E. O'Neil, and J.M. Evans. 1993. Discharge of coalbed product water to surface waters: assessing , predecting , and preventing ecological effects. Quarterly Review of Methane from Coal Seams Technology. 11: 18-25.
- Ohlendorf, H.M., A.W. Kilness, J.L. Simmons, R.K. Stroud, D.J. Hoffman, and J.F. Moore. 1988. Selenium toxicosis in wild aquatic birds. Journal of Toxicology Environment and Health 24:67-92.
- Ostrand, K.G., and G.R. Wilde. 2001. Temprature, dissolved oxygen, and salinity tolerances of five prairie stream fishes and their role in explaining fish assemblage patterns. Transactions of the North American Fisheries Society. 130: 742-749.

- Ramirez, P. 2005. Assessment of Contaminants Associated with Coal Bed Methane-Produced Water and Its Suitability for Wetland Creation or Enhancement Projects. U.S. Fish and Wildlife Service, Ecological Services, Cheyenne, WY. Contaminant Report Number: R6/721C/05.

- Skorupa, J.P., and H.M. Ohlendorf. 1991. Contaminants in drainage water and avian risk thresholds. In: A. Dinar and D. Zilberman, eds., The Economics and Management of Water and Drainage in Agriculture. Kluwer Academic Publishers. Norwell, Massachusetts. Pages 345-368.

- Sorensen, E.M.B. 1988. Selenium accumulation, reproductive status, and histopathological changes in environmentally exposed redear sunfish. Arch. Toxicol. 61: 324-329.

- Sutter, G.W., and C.L. Tsao. 1996. Toxilogical benchmarks for screening potential contaminants of concern for effects on aquatic biota: 1996 revision. Risk Assessment Program Health Sciences Research Division, Oak Ridge Tennessee.

- UDNR 2006. Range-wide Conservation Agreement for Roundtail Chub, Gila robusta, Bluehead Sucker, Catostomus discobolus, and Flannelmouth Sucker, Catostomus latipinnis. Salt Lake City, Utah: Utah Department of Natural Resources.

- Upper Colorado River Endangered Fish Recovery Program 1999. Website of the Upper Colorado River Endangered Fish Recovery Program. Online at: http://www.r6.fws.gov/coloradoriver

- WDEQ, 2006. WYPDES #WY0054038: Statement of Basis & Permit Addenda (obtained from WDEQ website: http://deq.state.wy.us/wqd/events/index.asp).

- WDEQ, 2005. WYPDES #WY0042145: Statement of Basis & Permit Addenda (obtained from WDEQ website: http://deq.state.wy.us/wqd/events/index.asp).

- WDEQ 2007. Letter of clarification dated March 14, 2007.

- WGFD 1998. Muddy Creek Basin Management Plan. Cheyenne, Wyoming: Wyoming Game and Fish Department

- WGFD 2004. Warmwater Stream Assessment Manual. Cheyenne, Wyoming: Wyoming Game and Fish Department.

- WGFD, 2005. Annual Report of Big & Trophy Game Harvest

- WGFD, 2005. Annual Report of Small & Upland Game Harvest

- WOGCC, 2006. GIS Data for State APDs, Carbon County, Wyoming.

- WSEO, 2007. Ground & Surface Water Appropriations Data (obtained from WSEO website: http://seo.state.wy.us/wrdb/index.aspx).

Appendix A

Sundry Notice Submissions by Double Eagle Petroleum Company

Form 3160-5
(August 1999)

UNITED STATES
DEPARTMENT OF THE INTERIOR
BUREAU OF LAND MANAGEMENT

FORM APPROVED
OMB No. 1004-0135
Expires: November 30, 2000

SUNDRY NOTICES AND REPORTS ON WELLS

Do not use this form for proposals to drill or to re-enter an abandoned well. Use Form 3160-3 (APD) for such proposals.

SUBMIT IN TRIPLICATE - Other Instructions on reverse side

5. Lease Serial No. WYC-075345A
6. If Indian, Allottee, or Tribe Name
7. If Unit or CA. Agreement Designation: Cow Creek Unit
8. Well Name and No.: CCU #34-12
9. API Well No.: 49-007-21601
10. Field and Pool, or Exploratory Area: Cow Creek
11. County or Parish, State: Carbon County, Wyoming

1. Type of Well: [ ] Oil Well [ ] Gas Well [X] Other Injection Well
2. Name of Operator: Double Eagle Petroleum Company
3a. Address: P.O. Box 766, Casper, Wyoming 82602
3b. Phone No. *(include area code)*: (307) 237-9330
4. Location of Well *(Footage, Sec., T., R., M., or Survey Description)*: 673' FSL 1973' FEL SWSE of Sec 12, T. 16 N.- R. 92 W.

12. CHECK APPROPRIATE BOX(S) TO INDICATE NATURE OF NOTICE, REPORT, OR OTHER DATA

TYPE OF SUBMISSION	TYPE OF ACTION			
[X] Notice of Intent	[ ] Acidize	[ ] Deepen	[ ] Production (Start/ Resume)	[ ] Water Shut-off
	[ ] Altering Casing	[ ] Fracture Treat	[ ] Reclamation	[ ] Well Integrity
[ ] Subsequent Report	[ ] Casing Repair	[X] New Construction	[ ] Recomplete	[ ] Other
	[ ] Change Plans	[ ] Plug and abandon	[ ] Temporarily Abandon	
[ ] Final Abandonment Notice	[ ] Convert to Injection	[ ] Plug back	[ ] Water Disposal	

13. Describe Proposed or Completed Operation (clearly state all pertinent details including estimated starting date of any proposed work and approximate duration thereof. If the proposal is to deepen directionally or recomplete horizontally, give subsurface locations and measured and true vertical depths or pertinent markers and sands. Attach the Bond under which the work will performed or provide the Bond No. on file with the BLM/ BIA. Required subsequent reports shall be filed within 30 days following completion of the involved operations. If the operation results in a multiple completion or recompletion in a new interval, a Form 3160-4 shall be filed once testing has been completed. Final Abandonment Notice shall be filed only after all requirements, including reclamantion, have been completed, and the operator has determined that the site is ready for final inspection.)

Operator will construct an Emit water treatment facility at this well site to receive production water from operator's coal bed methane wells in the Cow Creek Field.

Production water will be treated to reach standards required by the Wyoming Department of Environmental Quality in accordance with a newly issued NPDES permit that complies with standards of the Colorado River Salinity Forum.

The well site will be enlarged a maximum of 5 acres for the treatment facility.
Reclamation of the enlarged well site area will conform to the existing well site reclamation requirements.
A well site layout is attached showing the location of the proposed water treatment facility.

14. I hereby certify that the foregoing is true and correct.

Name *(Printed/ Typed)*	Title
Stephen H. Hollis	President
Signature: Stephen H. Hollis	Date: 2-Dec-05

THIS SPACE FOR FEDERAL OR STATE OFFICE USE

Approved by	Title	Date
Conditions of approval, if any are attached. Approval of this notice does not warrant or certify that the applicant holds legal or equitable title to those rights in the subject lease which would entitle the applicant to conduct operations thereon.	Office	

Title 18 U.S.C. Section 1001 AND Title 43 U.S.C. Section 1212, make it a crime for any person knowingly and willfully to make any department or agency of the United States any false, fictitiousor frauduler.t statements or representations as to any matter within its jurisdiction.

DEC - 7 2005

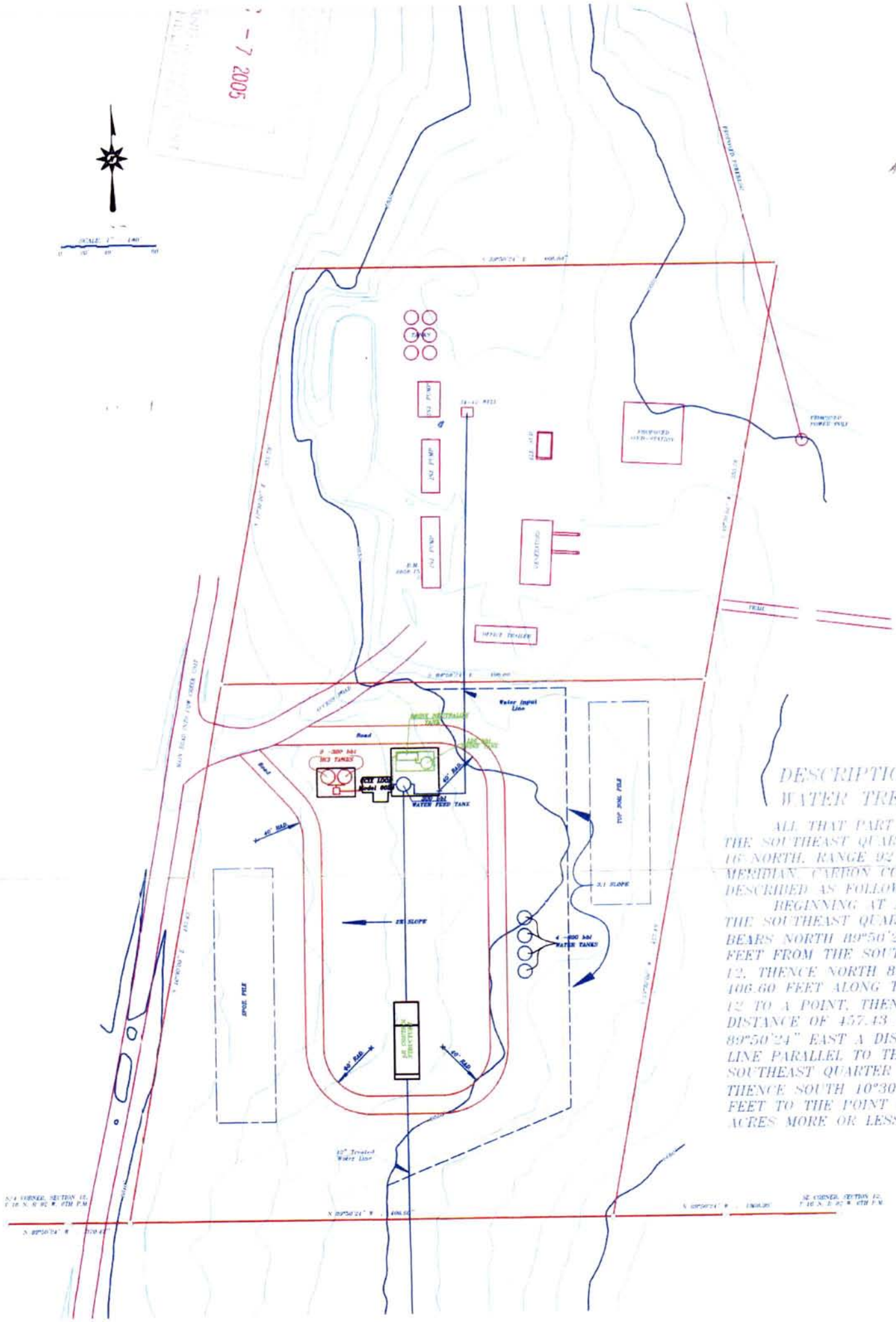

DESCRIPTION O
WATER TREATM

ALL THAT PART OF TI
THE SOUTHEAST QUARTER O
16 NORTH, RANGE 92 WEST
MERIDIAN, CARBON COUNTY
DESCRIBED AS FOLLOWS:
BEGINNING AT A POIN
THE SOUTHEAST QUARTER O
BEARS NORTH 89°50'24" WE
FEET FROM THE SOUTHEAST
12, THENCE NORTH 89°50'24
106.60 FEET ALONG THE SO
12 TO A POINT, THENCE NO
DISTANCE OF 457.43 FEET
89°50'24" EAST A DISTANCE
LINE PARALLEL TO THE SOU
SOUTHEAST QUARTER OF SA
THENCE SOUTH 10°30'00" W
FEET TO THE POINT OF BE
ACRES MORE OR LESS.

SU

REGIS
THE
HERE
SURV
DESC
2005
ACCU

Form 3160- 5
(August 1999)

UNITED STATES
DEPARTMENT OF THE INTERIOR
BUREAU OF LAND MANAGEMENT

FORM APPROVED
OMB No. 1004- 0135
Expires: November 30, 2000

SUNDRY NOTICES AND REPORTS ON WELLS

Do not use this form for proposals to drill or to re-enter an abandoned well. Use Form 3160-3 (APD) for such proposals.

SUBMIT IN TRIPLICATE - Other Instructions on reverse side

5. Lease Serial No. WYC-075345A
6. If Indian, Allottee, or Tribe Name
7. If Unit or CA. Agreement Designation: Cow Creek Unit
8. Well Name and No.: CCU #34-12
9. API Well No.: 49-007-21601
10. Field and Pool, or Exploratory Area: Cow Creek
11. County or Parish, State: Carbon County, Wyoming

1. Type of Well
☐ Oil Well ☐ Gas Well ☒ Other Water Pipeline

2. Name of Operator
Double Eagle Petroleum Company

3a. Address
P.O. Box 766, Casper, Wyoming 82602

3b. Phone No. *(include area code)*
(307) 237-9330

4. Location of Well *(Footage, Sec., T., R., M., or Survey Description)*
673' FSL 1973' FEL SWSE of Sec 12, T. 16 N.- R. 92 W.

12. CHECK APPROPRIATE BOX(S) TO INDICATE NATURE OF NOTICE, REPORT, OR OTHER DATA

TYPE OF SUBMISSION	TYPE OF ACTION			
☒ Notice of Intent	☐ Acidize	☐ Deepen	☐ Production (Start/ Resume)	☐ Water Shut-off
	☐ Altering Casing	☐ Fracture Treat	☐ Reclamation	☐ Well Integrity
☐ Subsequent Report	☐ Casing Repair	☒ New Construction	☐ Recomplete	☐ Other
	☐ Change Plans	☐ Plug and abandon	☐ Temporarily Abandon	
☐ Final Abandonment Notice	☐ Convert to Injection	☐ Plug back	☐ Water Disposal	

13. Describe Proposed or Completed Operation (clearly state all pertinent details including estimated starting date of any proposed work and approximate duration thereof. If the proposal is to deepen directionally or recomplete horizontally, give subsurface locations and measured and true vertical depths or pertinent markers and sands. Attach the Bond under which the work will performed or provide the Bond No. on file with the BLM/ BIA. Required subsequent reports shall be filed within 30 days following completion of the involved operations. If the operation results in a multiple completion or recompletion in a new interval, a Form 3160-4 shall be filed once testing has been completed. Final Abandonment Notice shall be filed only after all requirements, including reclamantion, have been completed, and the operator has determined that the site is ready for final inspection.)

Operator requests approval to construct a 4.4 mile, 12" water pipeline in accordance with the attached plan of Development.

Map of pipeline route is attached.

Water pipeline is in accordance with NPDES Permit # 54038

14. I hereby certify that the foregoing is true and correct.

Name *(Printed/ Typed)*: D. Steven Degenfelder
Title: Vice President
Signature: D Steven Degenfelder
Date: 20-Jun-07

THIS SPACE FOR FEDERAL OR STATE OFFICE USE

Approved by | Title | Date

Conditions of approval, if any are attached. Approval of this notice does not warrant or certify that the applicant holds legal or equitable title to those rights in the subject lease which would entitle the applicant to conduct operations thereon. | Office

Title 18 U.S.C. Section 1001 AND Title 43 U.S.C. Section 1212, make it a crime for any person knowingly and willfully to make any department or agency of the United States any false, fictitiousor fraudulent statements or representations as to any matter within its jurisdiction.

(Instructions on reverse)

RECEIVED
JUN 21 2007
BUREAU OF LAND MANAGEMENT
RAWLINS FIELD OFFICE

PLAN OF DEVELOPMENT - PIPELINE SUNDRY
DOUBLE EAGLE PETROLEUM COMPANY

RECEIVED
JUN 21 2007
BUREAU OF LAND MANAGEMENT
RAWLINS FIELD OFFICE

Catalina Unit
Carbon County, Wyoming

June 20, 2007

PROJECT: Double Eagle Petroleum Company requires access across land managed by the Bureau of Land Management to construct a water pipeline from the Catalina Unit Emit Water Treatment Plant to private land in the SWSW of Section 21, Township 16 North, Range 92 West, Carbon County, Wyoming. Project will transport treated production water to a point in Muddy Creek where water will be discharged in accordance with Double Eagle NPDES Permit #54038. The pipeline will occupy lands within the Catalina Unit # WYW-163121X in Sections 12-14, 21-23 (16N-92W). All water transported in this pipeline will be produced from wells in the Catalina Unit.

Facility Description:

1) Purpose and Need for the Right-of-Way Facility:
   a) Commodity - production water from wells in the Catalina Unit.
   b) Pipeline is a water line.
   c) Pipeline will be a subsurface, 12" diameter line.
   d) Pipeline will be buried a minimum depth of 48".
   e) Required disturbed width is 30', no additional areas are required
   f) Pipeline will follow route as shown on map. Length of the pipeline is approximately 23,258' or 4.40 miles.
   g) The entire route of the proposed right of way across federal lands will be the subject of a cultural survey performed by Double Eagle and filed with BLM.

2) Facility Design Factors:
   a) Pipeline will be steel pipe or HDPE, weight and grade sufficient in strength to withstand pressures of 250 psi, with an estimated flow rate up to 20,000 barrels per day.
   b) Soil is clay and sandy clay.
   d) Pipeline operating temperature 60-80 degrees Fahrenheit.

3) No other government agencies are involved.

4) Right-of-Way is located as shown on the attached map.

5) No other Resource values are affected.

6) Construction will consist of removing the surface vegetation with a grader

and stockpiling it alongside of the right-of-way for the length of the right-of-way, digging a trench 3' wide by 4' deep with a backhoe or trencher, welding and installing the pipe in the trench with side boom cats, back filling, recontouring and seeding the surface. Estimated disturbed width will consist of flat blading with a dozer, width 25', a trench and spoil pile 12' wide. As soon as this section is backfilled, water diversion bars will be installed as needed. Pipeline position will follow a parallel position with the access road to the respective well wherever possible across BLM lands.

7) Stabilization and Rehabilitation - recontoured ground will be reseeded, water diversion ditches will be cut on all grades. Pipeline will be left in place upon completion of the project. There will be no unnecessary surface disturbance.

8) Operation - no regular vehicle traffic will run on the right-of-way, however, the line will be checked occasionally for leaks. It may be necessary to expose a portion of the line for repairs from time-to-time; if so, the disturbance will be minimized, ground recontoured and reseeded.

RECEIVED
JUN 21 2007
BUREAU OF LAND MANAGEMENT
RAWLINS FIELD OFFICE

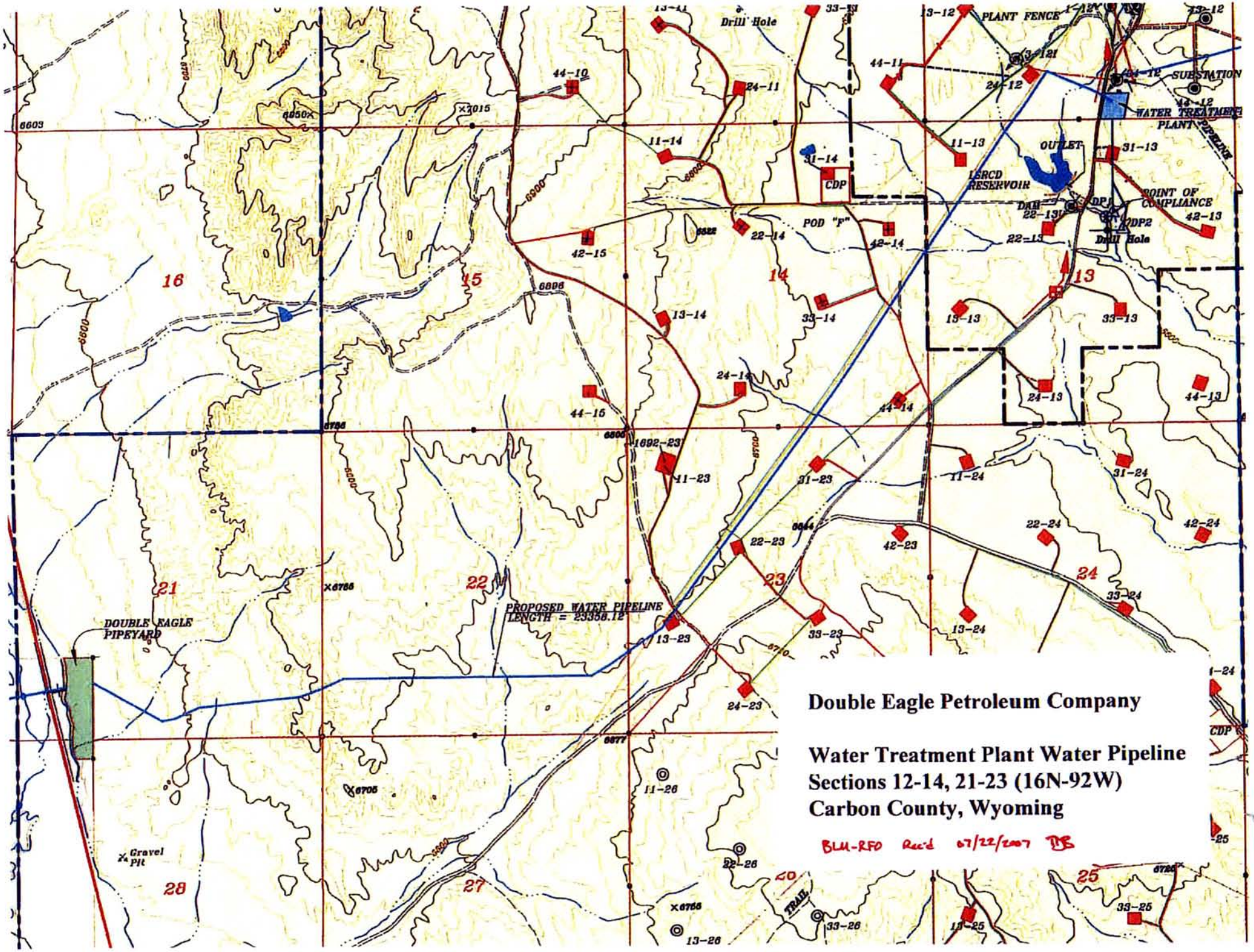

Double Eagle Petroleum Company

Water Treatment Plant Water Pipeline
Sections 12-14, 21-23 (16N-92W)
Carbon County, Wyoming

BLM-RFO Rec'd 07/22/2007 TB

Appendix B

Discharge Point Erosion Control Structure

Double Eagle - Catalina Unit

Proposed Muddy Creek Outfall Design

Prepared by:
Lowham Engineering LLC
205 S. Third St.
Lander WY 82520
(307) 335-8466

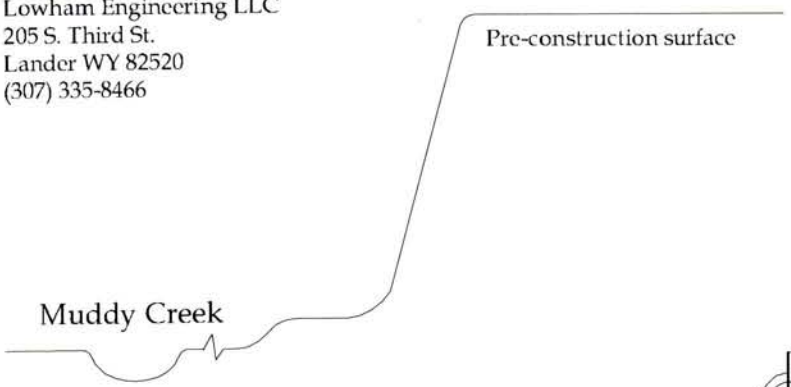

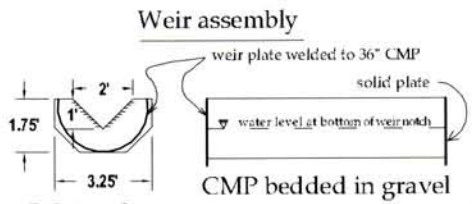

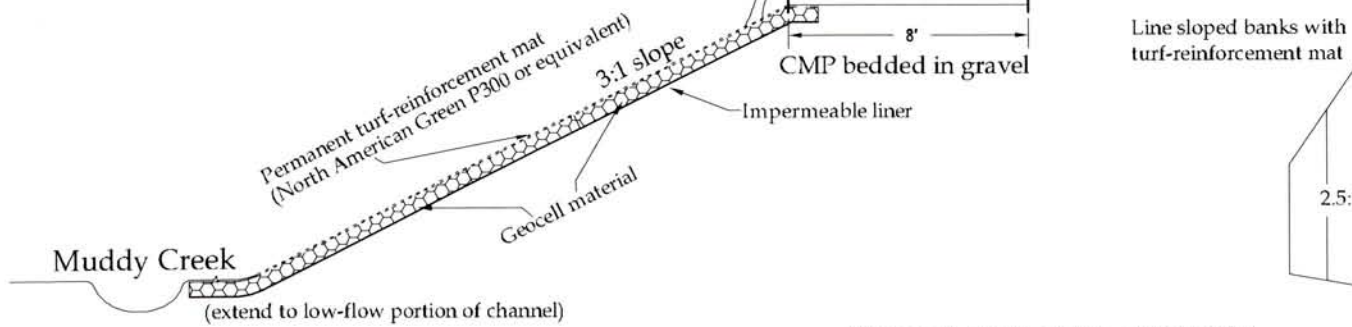

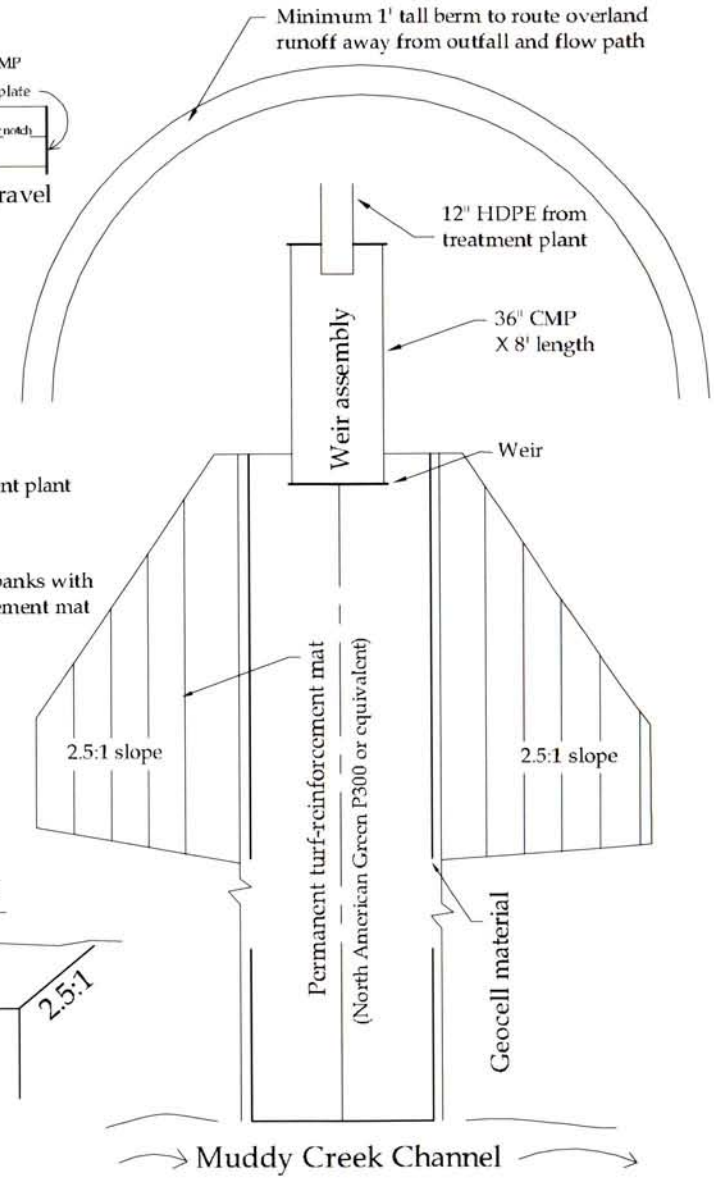

NOTES:
- Place centerline of geocell 6" lower than edges
- Place impermeable liner under the geocell
- Secure geocell with rebar "U" hooks
- "U" hooks are 6-feet long, #4 rebar, bent at the middle on a 2" radius
- Fill geocell with 2" minus rock and cohesive soil
- Line geocell and sloped banks with turf-reinforcement mat
- Trench edges of turf-reinforcement mat to a depth of 1 foot
- Secure turf-reinforcement mat to geocell with zip-ties

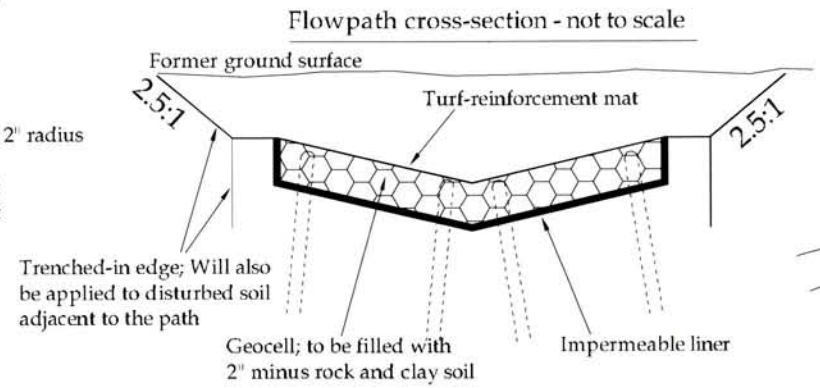

Double Eagle - Weir Design

90-degree v-notch weir

Prepared by:
Lowham Engineering LLC
205 South Third St.
Lander, WY 82520
(307) 335-8466

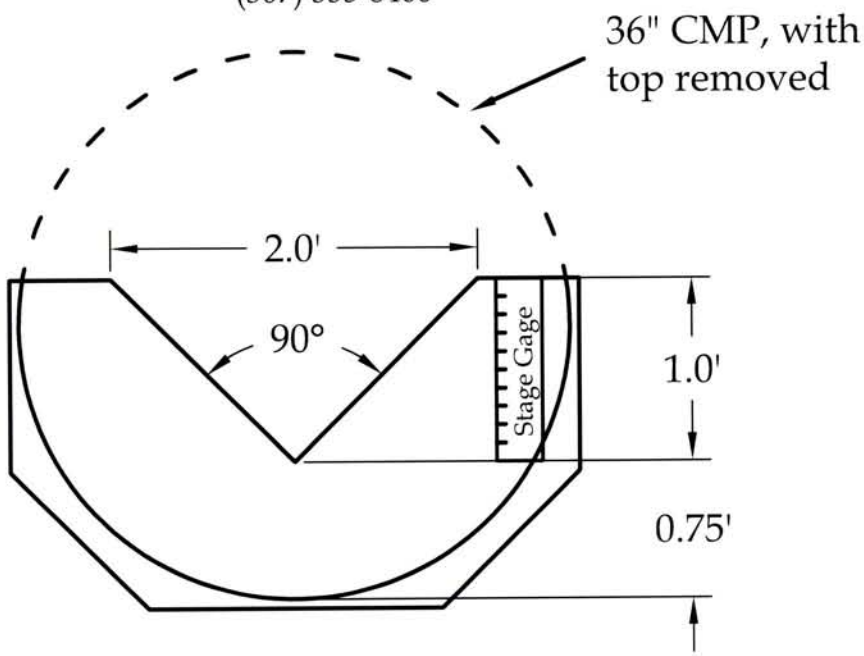

NOTES:

1) The weir structure should be made out of aluminum, galvanized steel, or similar corrosion resistant material. Material thickness should be adequate to support the structure (suggest 1/8" galvanized steel or 1/4" aluminum). A cross brace will be required on the downstream side of the structure, approximately 2" below the v-notch, to improve rigidity.
2) The downstream edge of the v-notch must be beveled at a 60-degree angle (min) to provide a sharp crest of 1-2 mm (1/16") thick (see detail).
3) A stage gage will need to be installed as shown on the upstream side of the weir.
4) The weir plate will be attached to the end of a 36" CMP, opened like a trough as shown.

Weir tables for a Double Eagle outfall

for partially contracted v-notch weir

Stage	Discharge, Q (gpm)				
h_1 (ft)	**0**	**0.02**	**0.04**	**0.06**	**0.08**
0.2	20.9	28.0	35.1	42.3	49.4
0.3	56.5	68.3	80.1	91.8	103.6
0.4	115.3	132.4	149.5	166.6	183.7
0.5	200.8	224.2	247.5	270.8	294.1
0.6	317.4	347.5	377.6	407.8	437.9
0.7	468.0	505.5	543.0	580.6	618.1
0.8	655.6	701.8	747.9	794.1	840.2
0.9	886.4				

Stage	Discharge, Q (cfs)				
h_1 (ft)	**0**	**0.02**	**0.04**	**0.06**	**0.08**
0.2	0.046	0.062	0.078	0.094	0.110
0.3	0.126	0.152	0.178	0.205	0.231
0.4	0.257	0.295	0.333	0.371	0.409
0.5	0.448	0.499	0.551	0.603	0.655
0.6	0.707	0.774	0.841	0.909	0.976
0.7	1.043	1.126	1.210	1.294	1.377
0.8	1.461	1.564	1.667	1.769	1.872
0.9	1.975				

Stage	Discharge, Q (bpd)				
h_1 (ft)	**0**	**0.02**	**0.04**	**0.06**	**0.08**
0.2	715	960	1204	1449	1694
0.3	1939	2342	2745	3148	3551
0.4	3955	4541	5127	5714	6300
0.5	6887	7686	8486	9285	10084
0.6	10884	11916	12949	13981	15014
0.7	16046	17333	18620	19907	21194
0.8	22481	24063	25645	27228	28810
0.9	30393				

Prepared by:
Lowham Engineering LLC
205 S. Third St.
Lander, WY 82520
(307) 335-8466

CHANNEL INSTALLATION

APLICACIONES PARA CANALES

NORTH AMERICAN GREEN

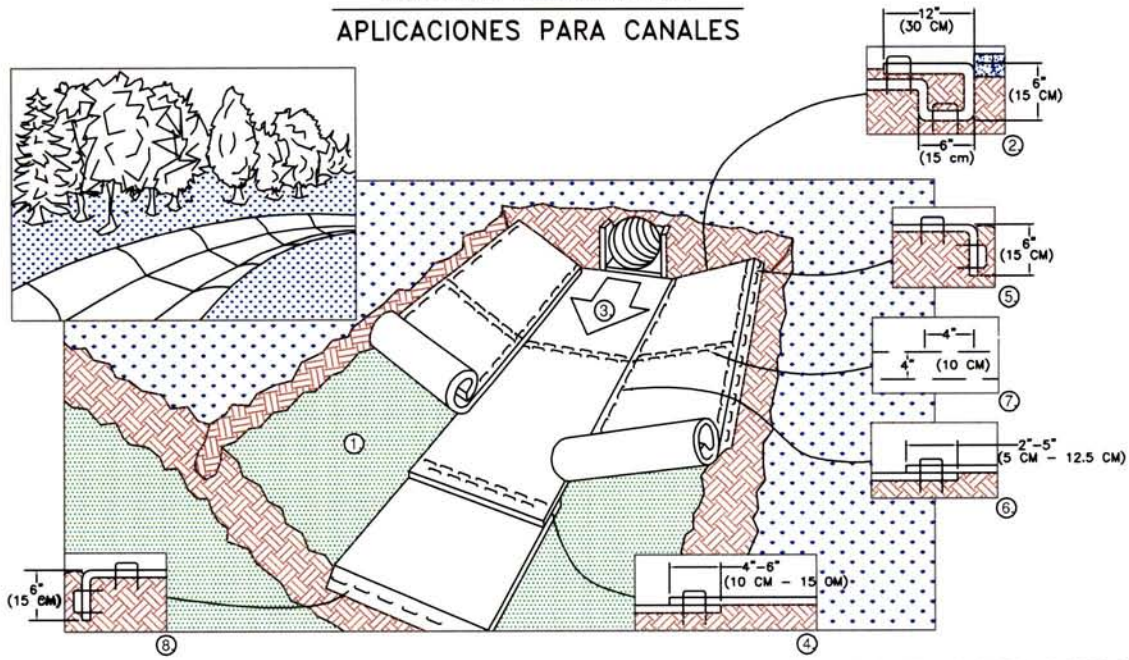

1. PREPARE SOIL BEFORE INSTALLING BLANKETS, INCLUDING ANY NECESSARY APPLICATION OF LIME, FERTILIZER, AND SEED. NOTE: WHEN USING CELL-O-SEED DO NOT SEED PREPARED AREA. CELL-O-SEED MUST BE INSTALLED WITH PAPER SIDE DOWN.
2. BEGIN AT THE TOP OF THE CHANNEL BY ANCHORING THE BLANKET IN A 6" (15 CM) DEEP X 6" (15 CM) WIDE TRENCH WITH APPROXIMATELY 12" (30 CM) OF BLANKET EXTENDED BEYOND THE UP-SLOPE PORTION OF THE TRENCH. ANCHOR THE BLANKET WITH A ROW OF STAPLES/STAKES APPROXIMATELY 12" (30 CM) APART IN THE BOTTOM OF THE TRENCH. BACKFILL AND COMAPCT THE TRENCH AFTER STAPLING. APPLY SEED TO COMPACTED SOIL AND FOLD REMAINING 12" (30 CM) PORTION OF BLANKET BACK OVER SEED AND COMPACTED SOIL. SECURE BLANKET OVER COMPACTED SOIL WITH A ROW OF STAPLES/STAKES SPACED APPROXIMATELY 12" (30 CM) ACROSS THE WIDTH OF THE BLANKET.
3. ROLL CENTER BLANKET IN DIRECTION OF WATER FLOW IN BOTTOM OF CHANNEL. BLANKETS WILL UNROLL WITH APPROPRIATE SIDE AGAINST THE SOIL SURFACE. ALL BLANKETS MUST BE SECURELY FASTENED TO SOIL SURFACE BY PLACING STAPLES/STAKES IN APPROPRIATE LOCATIONS AS SHOWN IN THE STAPLE PATTERN GUIDE. WHEN USING THE DOT SYSTEM™, STAPLES/STAKES SHOULD BE PLACED THROUGH EACH OF THE COLORED DOTS CORRESPONDING TO THE APPROPRIATE STAPLE PATTERN.
4. PLACE CONSECUTIVE BLANKETS END OVER END (SHINGLE STYLE) WITH A 4" - 6" (10 CM -15 CM) OVERLAP. USE A DOUBLE ROW OF STAPLES STAGGERED 4" (10 CM) APART AND 4" (10 CM) ON CENTER TO SECURE BLANKETS.
5. FULL LENGTH EDGE OF BLANKETS AT TOP OF SIDE SLOPES MUST BE ANCHORED WITH A ROW OF STAPLES/STAKES APPROXIMATELY 12" (30 CM) APART IN A 6" (15 CM) DEEP X 6" (15 CM) WIDE TRENCH. BACKFILL AND COMPACT THE TRENCH AFTER STAPLING.
6. ADJACENT BLANKETS MUST BE OVERLAPPED APPROXIMATELY 2" - 5" (5 CM -12.5 CM) (DEPENDING ON BLANKET TYPE) AND STAPLED.
7. IN HIGH FLOW CHANNEL APPLICATIONS, A STAPLE CHECK SLOT IS RECOMMENDED AT 30 TO 40 FOOT (9 M - 12 M) INTERVALS. USE A DOUBLE ROW OF STAPLES STAGGERED 4" (10 CM) APART AND 4" (10 CM) ON CENTER OVER ENTIRE WIDTH OF THE CHANNEL.
8. THE TERMINAL END OF THE BLANKETS MUST BE ANCHORED WITH A ROW OF STAPLES/STAKES APPROXIMATELY 12" (30 CM) APART IN A 6" (15 CM) DEEP X 6" (15 CM) WIDE TRENCH. BACKFILL AND COMPACT THE TRENCH AFTER STAPLING.

NOTE:
* IN LOOSE SOIL CONDITIONS, THE USE OF STAPLE OR STAKE LENGTHS GREATER THAN 6" (15 CM) MAY BE NECESSARY TO PROPERLY ANCHOR THE BLANKETS.

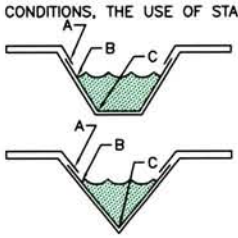

CRITICAL POINTS

A. OVERLAPS AND SEAMS
B. PROJECTED WATER LINE
C. CHANNEL BOTTOM/SIDE SLOPE VERTICES

NOTE:
* HORIZONTAL STAPLE SPACING SHOULD BE ALTERED IF NECESSARY TO ALLOW STAPLES TO SECURE THE CRITICAL POINTS ALONG THE CHANNEL SURFACE.

** IN LOOSE SOIL CONDITIONS, THE USE OF STAPLE OR STAKE LENGTHS GREATER THAN 6" (15 cm) MAY BE NECESSARY TO PROPERLY ANCHOR THE BLANKETS.

PUNTOS CRITICOS

A. TRASLAPES Y JUNTAS
B. LINEAS DE AGUA PROYECTADA
C. FONDO DEL CANAL/VERTICES DE LAS PENDIENTES LATERALES

NOTA:
* LA SEPARACION HORIZONTAL DE LAS GRAPAS SE DEBE ALTERAR SI SE NECESITA, PARA PERMITIR QUE LAS GRAPAS ASEGUREN LOS PUNTOS CRITICOS A LO LARGO DE LA SUPERFICIE DEL CANAL.

** EN CONDICIONES DE SUELO SUELTO, PUEDE QUE SE NECESITEN GRAPAS O ESTACAS DE MAS DE 6" (15 CM) DE LARGO PARA ASEGURAR LAS MANTAS CORRECTAMENTE.

1. PREPARE EL SUELO DE COLOCAR LAS MANTAS, INCLUYENDO LA APLICASION DE CAL, FERTILIZANTE SEMILLA. NOTA: CUANDO ESTE USANDO CELL-O-SEED NO SIEMBRE EL AREA PREPARADA. CELL-O-SEED TIENE QUE INSTALARSE CON EL LADO DE PAPEL HACIA ABAJO.
2. COMIENCE EN LA CABECERA DEL CANAL SUJETANDO LA MANTA EN UNA ZANJA DE 6" (15 CM) DE PROFUNDIDAD POR 6" (15 CM). DE ANCHO CON APROXIMADAMENTE 12" (30 CM) DE LA MANTA EXTENDIDA MAS ALLA DE LA PENDIENTE ALTA DE LA ZANJA. SUJETE RELLENE Y COMPACTE LA ZANJA DESPUES DEL ENGRAPE. RIEGUE LA SEMILLA EN EL SUELO COMPACTADO Y DOBLE LAS 12" (30 CM) REMANENTES DE MANTA SOBRE LA SEMILLA Y EL SUELO COMPACTADO. ASEGURE LA MANTA SOBRE EL SUELO CON UNA LINEADE GRAPAS O ESTACAS APROXIMADAMENTE 12" (30 CM) UNA DE LA OTRA A TRAVES DEL ANCHO DE LA MANTA.
3. DESENROLLE LA MANTA DEL MEDIO EN EL FONDO DEL CANAL Y EN LA DIRECCION DEL FLUJO DE AGUA CON EL LADO APROPIADO HACIA LA SUPERFICIE DEL SUELO. TODAS LAS MANTAS DEBERAN ASEGURARSE A LA SUPERFICIE DEL SUELO POR MEDIO DE GRAPAS O ESTACAS EN LUGARESAPROPIADOS TAL Y COMO SE INDICA EN EL PATRON GUIA DE ENGRAPADO. CUANDO ESTE USANDO EL DOT SYSTEM™. LAS GRAPAS O ESTACAS DEBEN COLOCARSE A TRAVES DE CADA UNO DE LOS PUNTOS CON COLOR CORRESPONDIENTES AL PATRON DE ENGRAPADO APROPIADO.
4. COLOQUE LAS MANTAS CONSECUTIVAS BORDE SOBRE BORDE (TIPO ESCALONADO) CON UN TRASLAPE DE 4" - 6" (10 CM - 15 CM). USE UNA LINEA DOBLE DE GRAPAS ESCALONADAS, SEPARADAS POR 4" (10 CM) Y CADA 4" (10 CM) SOBRE EL CENTRO PARA ASEGURAR LAS MANTAS.
5. EN EL TOPE DE LAS DOS PENDIENTES LATERALES DEL CANAL, SE DEBE SUJETAR TODO EL LARGO DE LA ORILLA DE LAS MANTAS CON UNA LINEA DE GRAPAS O ESTACAS APROXIMADAMENTE CADA 12" (30 CM) UNA DE LA OTRA EN UNA ZANJA DE 6" (15 CM) DE PROFUNDIDAD POR 6" (15 CM) DE ANCHO. RELLENE Y COMPACTE LA ZANJA DESPUES DEL ENGRAPE.
6. LAS MANTAS ADYACENTES DEBEN TRASLAPARSE APROXIMADAMENTE DE 2" - 5" (5 CM- 12.5 CM) (DEPENDIENDO DEL TIPO DE. MANTA) Y ENGRAPPARSE.
7. EN APLICACIONES PARA CANALES DE FLUJO ALTO, SE RECOMIENDA DEJAR UNA RANURA PARA EL CHEQUEO DE LAS GRAPAS A INTERVALOS DE 30 A 40 PIES (9 M - 12 M). USE UNA LINEA DOBLE DE PRAPAS ESCALONADAS, SEPARADAS POR 4" (10 CM) Y CADA 4" (10 CM) SOBRE EL CENTRO A TRAVES DE TODO EL ANCHO DEL CANAL.
8. LOS BORDES FINALES DE LAS MANTAS DEBEN SUJETARSE CON UNA LINEA DE GRAPAS O ESTACAS APROXIMADAMENTE CADA 12" 30 CM) UNA DE LA OTRA EN UNA ZANJA DE 6" (15 CM) DE PROFUNDIDAD POR 6" (15 CM) DE ANCHO. RELLENE Y COMPACTE DESPUES DEL ENGRAPADO.

NOTA:
* EN CONDICIONES DE SUELTO, PUEDE QUE SE NECESITEN GRAPAS O ESTACAS DE MAS DE 6" (15 CM) DE LARGO PARA ASEGURAR LAS MANTAS CORRECTAMENTE.

STAPLE PATTERN GUIDE
6.67' (2.03 M) WIDE ROLLS

PARA EL ENGRAPADO
6.67' (2.03 M) ROLLE ANCHO

NORTH AMERICAN GREEN

14649 HIGHWAY 41 NORTH
EVANSVILLE, IN 47725
800-772-2040
www.nagreen.com

Ⓐ

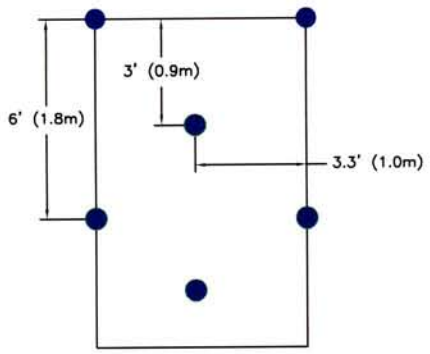

0.7 STAPLES PER SQ. YD.
(0.8 STAPLES PER SQ. M)

0.7 Grapas por yd cuad
(0.8 Grapas por m cuad)

Ⓑ

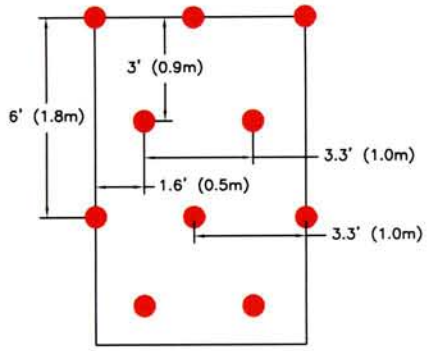

1.15 STAPLES PER SQ. YD.
(1.35 STAPLES PER SQ. M)

1.15 GRAPAS POR YD CUAD
(1.35 GRAPAS POR M CUAD)

Ⓒ

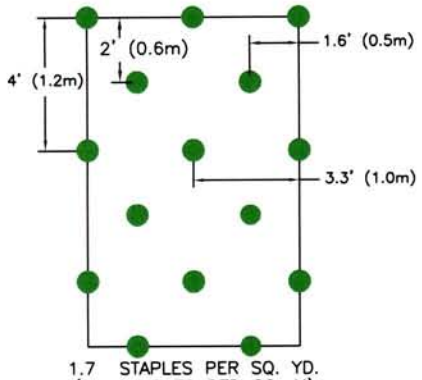

1.7 STAPLES PER SQ. YD.
(2.0 STAPLES PER SQ. M)

1.7 GRAPAS POR YD CUAD
(2.0 GRAPAS POR M CUAD)

Ⓓ

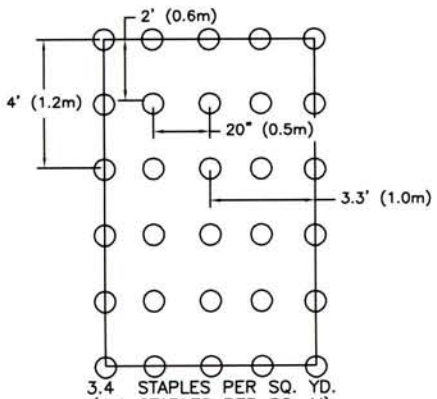

3.4 STAPLES PER SQ. YD.
(4.1 STAPLES PER SQ. M)

3.4 GRAPAS POR YD CUAD
(4.1 GRAPAS POR M CUAD)

Ⓔ

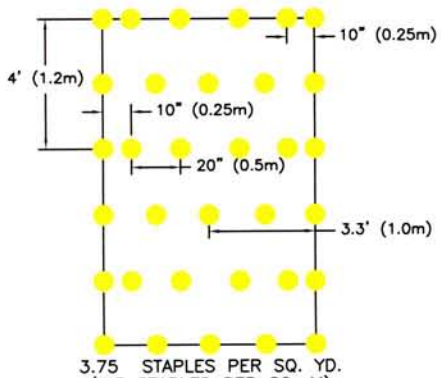

3.75 STAPLES PER SQ. YD.
(4.5 STAPLES PER SQ. M)

3.75 GRAPAS POR YD CUAD
(4.5 GRAPAS POR M CUAD)

REV. 1/2004

Geocell Installation

1. Prepare the site by removing all vegetative cover, debris and any unacceptable soils from the area where the geocell wall is to be placed. Replace any removed soils with acceptable materials and complete all earthwork in accordance with job specifications.

2. If geotextile is required by the job specifications, installation should be accomplished in accordance with the manufacturer's recommendations.

3. Partially install stakes or J-hooks, leaving a protruding length of the cell depth plus approximately 2 in [50 mm], along the top edge of the area in which the geocell is to be installed. A string or chalk line may be used to align staking locations and borders.

4. Geocell sections should be stretched past the designed length ((typically, 20 ft [6.1m]), the allow to settle back to the designed length. Set the end cells of the geocell sections over the previously installed stakes and complete installation of the stakes or J-hooks flush with or slightly below cell walls.

5. Adjoining sections must be level and flush with each other. Overlap the sides of the geocell sections and butt the ends together. Secure adjoining sections to each other using a pneumatic stapler, hot rings or other means as required by the job specifications.

6. Install the balance of the stakes or J-hooks as required by the job specifications.

7. When the geocells have been properly laid into place, the system should be infilled using the materials specified in the job specifications.

8. To prevent possible damage to the system, limit the drop height of the infill to no more than 3 ft [1 m].

9. When using sand, granular or top soil fills, overfill the geocell sections by 1 - 2 in [25 - 50 mm] to allow for settling and compaction.

10. Sand and granular fills should then be blade compacted to the top of the cells. Top soil fills should be compacted with the loader or back hoe or with a tamper plate. Concrete fills should be manually raked and machine finished.

Geo Products, L.L.C. provides this information only as an accommodation to our customers. No warranty or other representation regarding the suitability of the application procedure is made due to the fact that each installation has specific requirements that may not have been considered in this generalized procedure. Geo Products, L.L.C. makes no warranties or representations regarding the suitability of its geocell for specific uses or applications. Our liability is limited to furnishing, without charge, a replacement for any geocell section that is proven defective under normal use and service.

Appendix C

Dilution Analysis and Section 7 Consultation

Mr. Brian T. Kelly, Field Supervisor
U.S. Fish and Wildlife Service
Ecological Services
Wyoming Field Office
5353 Yellowstone Road
Suite 308A
Cheyenne, Wyoming 82009

Dear Mr. Kelly:

This letter represents informal consultation with the U.S. Fish and Wildlife Service (Service) in accordance with Section 7 of the Endangered Species Act of 1973 (Act), as amended (16 U.S.C. 1531 et. seq.), and the Interagency Cooperation Regulations (50 CFR 402). The Bureau of Land Management, Rawlins Field Office (BLM, RFO) wildlife biologists are requesting that the Service review the impacts of the following proposed Catalina Unit Coalbed Natural Gas Produced Water Disposal project on federally listed species.

Informal consultation on this proposed action applies to both public and private lands located within the zone of influence where applicable. Based on the federal nexus "but for" scenario, field assessments were completed on both the public parcels of the proposed action as well as the private parcels of the proposed action, where applicable.

PROJECT DESCRIPTION

The Proposed Action as described in the Environmental Assessment (EA) is necessary for the proponent to exercise lease rights and develop domestic natural gas resources. In Coalbed Natural Gas (CBNG) operations, water is removed from coal formations allowing for desorption of natural gas, principally methane, for production and eventual sale. Disposal of produced water is necessary to allow for continued natural gas production. The Proponent has indicated that the Proposed Action is necessary to provide for additional options in disposing of water within the Cow Creek/Catalina Unit CBNG development area.

The proposed action is located in T 16 N, R 91 W, sec 12 near the Dry Cow tributary of Cow creek east of Hwy 789 in Carbon County, WY (see Attachment 1, Figures 1-3). The effluent discharge point is located in T16 N, R 92 W, sec 20, SESE, terminating in defined channel of Muddy Creek.

The Proposed Action includes the treatment and release of water as provided for in the approved-modified WYPDES permit WY0054038. An important component of the permit is that it allows

only 1.27 cfs of effluent to be discharged for this proposed action. That flow is based on Double Eagle's calculations of the maximum amount of discharge that could be expected from the proposed action which includes the produced water from 14 well locations. Surface-disturbing actions are described in the Sundry Notice, and include the short-term surface disturbance of up to 5 acres at the well pad for construction of the EMIT water treatment facility. Preparation of the site for equipment installation would include the removal and storage of topsoil and grading of the area. A single buried 12"-diameter steel or HDPE pipeline would be installed from the treatment facilities to the discharge point (see Attachment 1, Figures 2 & 3). This pipeline would total approximately 23,400 linear feet in length, and would result in a short-term disturbance width of up to 50 feet (less, where aligned parallel and adjacent to existing pipeline disturbances. The pipelines would result in the short-term surface disturbance of approximately 26.9 acres. The pipeline is expected to be buried to a depth of approximately 4 feet below the ground surface.

In total, the Proposed Action would result in the short-term disturbance of up to 31.9 acres. Reclamation of the pipeline would be initiated within one year in accordance with the Master Surface Use Plan for the Cow Creek/Catalina Unit PODs and Sundry Notice. The facility area would remain in a disturbed state until the end of operations, for up to 20 years. Upon the end of operations at this facility, the above-ground equipment would be removed, and below-ground pipelines evacuated and buried in-place. Reclamation would then be initiated on any remaining areas in a disturbed state. Reclamation success is dependent upon a variety of factors, including precipitation. Reclamation would be expected to meet BLM standards for successful revegetation within approximately 5 years.

Traffic to and from the facility would increase during the construction phase and during the establishment of the facility. After this, traffic would decrease and would be similar to what currently exists in the maintenance of the existing CBNG development, with the addition of intermittent hauling traffic to carry away waste brine from the water treatment facility.

Double Eagle has indicated that hazardous materials may be used and stored at the water disposal facility for this Proposed Action. Two 300-gallon tanks would store hydrochloric acid (HCl) to be utilized in the water treatment process. These tanks would be bermed to contain any accidental releases.

The water treatment facility would utilize the Higgins Loop™ Continuous Ion Exchange process to reduce the concentration of solutes (lower the TDS). This would result in a discharge that would meet the WYPDES effluent criteria. A small amount (~1% of the waste stream) of concentrated brine would be formed. This brine would be stored on-location and then removed by trucks to the CCU #3-12 (located north of the treatment facility) where it would be reinjected as authorized by an Underground Injection Control (UIC) permit from the WDEQ. The treatment facility would include a 30'-tall tower. An EMIT "Applications Bulletin" provides a photograph of an installed typical "field unit" (see below).

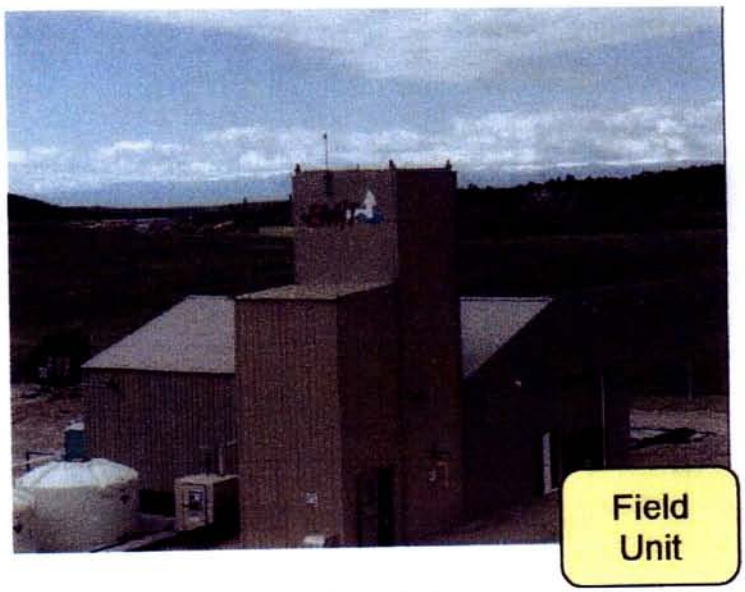

Photo of Similar Facility

The water discharge point will be constructed to reduce erosion at the point where effluent is released. This would include the construction of a control structure (see Attachment 1, Figure 4). This structure would reduce water velocity, reducing potential for erosion at the discharge point. There would be adequate pressure head from the treatment facility; no pumps or water transfer stations would be necessary to transport the water from the facility to the discharge point.

LISTED AND PROPOSED SPECIES

There is one endangered mammal, and 4 endangered species of fish that have the potential to be impacted by this proposed action. They are the black-footed ferret (*Mustela nigripes*), bonytail chub *(Gila elegans)*, Colorado pikeminnow *(Ptychocheilus lucius)*, humpback chub *(Gila cypha)*, and razorback sucker *(Xyrauchen texanus)*.

Black Footed Ferret

The black-footed ferret is listed as an Endangered species under the Endangered Species Act. The proposed action occurs within the Dad complex of "non-block cleared" black-footed ferret habitat. The USFWS has defined "non-block cleared" areas as having the potential for ferret occupation. Within these large tracts of "non-block cleared" habitat there are scattered prairie dog towns. It is these towns that provide the actual habitat for black footed ferrets.

The pipeline associated with the proposed action passes through approximately 1 mile of a single prairie dog town. A field site inspection was conducted on August 14th, 2007 and a single prairie dog was observed. The burrow was just off the existing disturbed right-of-way. There were numerous old and abandoned prairie dog burrows in the area, but current populations were extremely low. The prairie dog populations associated with the towns do not appear to be sufficient to support a ferret family group. A total of one active prairie dog burrow may be impacted by the

proposed action. There have been a number of black footed ferret surveys performed around the area of the proposed action, and there have been no ferrets or their sign observed. Therefore it has been determined that this proposed action would have "**No Effect**" on black footed ferrets.

Endangered Colorado River Fish Species

The last documentation of any of the four endangered fish species occurring in the Little Snake River was of a single Colorado pikeminnow in 1990 (Baxter and Stone 1995). Subsequent survey attempts by the WGFD to collect Colorado pikeminnow from this area of the Little Snake River yielded no additional specimens. Critical habitat for these species has not been designated in Wyoming (Upper Colorado River Endangered Fish Recovery Program 1999). The closest designated Critical Habitat for these fish species is the Yampa River in Colorado, approximately 98 river miles from the confluence of the Little Snake River and Muddy Creek. These species are not likely to be found in the main stem of the Little Snake River within Wyoming or its tributaries. However, the potential for project-related impacts to these tributaries of the Colorado River warrant their inclusion in this document.

The primary issue of concern that has been identified for the proposed action is the potential for the produced effluent to contain constituents that are known to be harmful to aquatic ecosystems in general, and fish in particular. These potential constituents include, ammonia, arsenic, barium, boron, chromium, copper, cyanide, iron, manganese, mercury, nickel, phenol, silver, zinc, TDS, salinity and selenium. Selenium is the primary potential constituent that has been shown to have detrimental impacts to fish and has been identified as a particular concern for this proposed action. Selenium is a metal that has the potential to bio-accumulate in the environment. A CBM produced water report done for the Powder River Basin states "The WDEQ aquatic life chronic criterion of 5 µg/L (parts per billion) of selenium is not adequate for preventing adverse effects on fish and aquatic birds. Several scientific experts on selenium have recommended a 2 µg/L criterion because concentrations exceeding 2 µg/L may create a bioaccumulation risk for fish and sensitive species of aquatic birds" (Hamilton 2002, Skorupa and Ohlendorf 1991; Lemly 1993). Discharge of produced water containing selenium concentrations greater than 2 µg/L can also result in impacts to fish and aquatic birds inhabiting downstream receiving waters (Ramirez 2005). Top level consumers in aquatic systems, such as waterfowl can readily accumulate selenium concentrations leading to low reproduction, embryonic deformities and increased mortality (Ohlendorf et al. 1988). A recent water quality test (08/2007) from untreated discharge water under another permit operated by Double Eagle in the area of the proposed action indicated that selenium levels are currently less than 1 µg/L in the Mesa Verde aquifer (Attachment 1, Table 4). The large majority of that water is from CBM water though the permit does allow for some mingling of water from conventional gas wells. However, constituent levels have been shown to change over time with produced water from the same aquifer. The EPA standard for protection of aquatic health is 5 µg/L. The average concentration of selenium in Muddy Creek is ~4.4 µg/L with a range of 1.3-13.5 µg/L (http://waterdata.usgs.gov).

The WYPDES permit authorizing surface discharge of this effluent allows for 9 µg/L of selenium. The determination to allow this level of selenium to be discharged was a result of a waste-load allocation (WLA) calculation performed by the WDEQ in standard practice. The effluent limits achieved through waste-loading calculations are designed to be protective if the class of water that

the effluent will be discharged into. The calculations consider a 7Q10 critical low flow of 10.6 cfs in the Little Snake River. A 7Q10 critical low flow, according to and calculated by the USGS, is the lowest consecutive 7-day flow with the statistical probability of occurring once every 10 years. By using the 7Q10 critical low flow in the waste-load allocation, the "worst case scenario" with regards to the critical-low-flow to effluent-flow is protected. The selenium concentration limit established in *Chapter 1 of the Wyoming Water Quality Rules and Regulations* for class 3 streams is 20 µg/L (see Attachment 2: WYPDES permit #WY0054038).

For demonstration purposes, an analysis was conducted to display the magnitude of impacts that might be seen from the proposed action due to addition of constituents to the Colorado River system from this proposed action. To conduct the analysis a number of assumptions were made that are not directly relatable to actual environmental conditions, but were necessary because the information does not currently exist to more accurately address the assumptions, and so that the logical progression of the analysis could be displayed. Tables 1-1 and 1-2 contain the results of the analysis. All flow volumes and constituent levels were obtained from the USGS National Water information System which can be found on line at "http://waterdata.usgs.gov"

Table 1-1: Analysis of Potential Selenium Dilution

Solution Parameters$_1$	Muddy Creek Near Baggs, WY 0.22 ft^3 (Se free water$_2$)	Little Snake River near Lily, CO 67 ft^3 (Se free water$_2$)	Yampa River near Deerlodge, CO 444 ft^3 (Se free water$_2$)
End of Pipe$_3$	Resulting Solution (µg/L$_4$)		
1.27 ft^3 @ 1 µg/L$_4$	0.852	0.019	0.003
1.27 ft^3 @ 2 µg/L$_4$	1.705	0.037	0.006
1.27 ft^3 @ 5 µg/L$_4$	4.262	0.093	0.014
1.27 ft^3 @ 9 µg/L$_4$	7.671	0.167	0.026

1. Water volumes are low instantaneous volumes for the month of August obtained from the USGS guaging stations displayed in the National Water Information System (http://waterdata.usgs.gov)
2. For analysis/demonstrative purposes it was assumed that there was no Se naturally occuring in the water system at the time and location of mixing.
3. The concentrations for End of Pipe are hypothetical potentials up to the 9 µg/L that is permitted by the DEQ permit.
4. µg/L indicate potential concentrations of Se

The primary intent of the analysis in Table 1-1 is to display the magnitude of dilution that is expected to occur from the end of pipe to various points along the Upper Colorado River System extending down to the Critical Habitat in the main stem of the Yampa River in CO. The assumptions that were made for the analysis displayed in Table 1-1 are as follows:

1. The environmental water was free of selenium at the time of mixing.
2. There was no conveyance loss of water through the system (similar to 100% of the effluent being piped to each respective site).
3. The water pH, temperature, and chemistry remained constant and had no effect on the selenium.
4. There was no addition of selenium from naturally occurring sources along the system.
5. The equation used to calculate the "Resulting Solution" values was $[v1(^{m}/_{vu})]/(v1 + v2)$ where $v1 = 1.27\ ft^3$, m = hypothetical mass in µg of Selenium, vu = the unit of measure for volume (i.e. ft^3), v2 = the volumes associated with the respective lows for the gauging stations.
6. $1\ ft^3 = 28.31684659$ L

Assumption #1 was included so that a general display of dilution could be achieved. Assumption #2 was included in an attempt to convey the worst possible magnitude of selenium addition to the

system at any given time. Assumptions # 3 and #4 were included to maintain the integrity of the analysis for Table 1-1. Also the data for these assumptions is variable through time and/or is currently unavailable. It is known however, that water chemistry, temperature, and pH are important factors that effect how selenium behaves in a water system.

The analysis was performed in this manner to convey the recognizable worst case scenario in the form of piping 100% of the effluent into each segment of the system rather than into Muddy Creek alone. Another potential analysis would be to perform the above calculations to include the resultant upstream concentrations of selenium. Intuitively this would further reduce the potential for bioaccumulation because the concentrations are being diluted at each step along the system where more water is added. Table 1-1 demonstrates that the potential for dilution of Se from the end of pipe to the various points along the system is very high, and that in all likelihood there would be insignificant impact to the listed fish species and their critical habitat. Even with 9 µg/L of selenium in the effluent, an addition of only 0.167 µg/L would result in the Little Snake River. To convey something closer to the environmental conditions, Se concentrations (of effluent and existing water) must be combined to achieve the result. This analysis is contained in Table 1-2.The same analysis could be performed for any potential constituent in the effluent.

Table 1-2: Analysis of Potential Selenium Mixing

Solution Parameters[1]	Muddy Creek Near Baggs, WY 0.22 ft^3 @ 13.5 µg/L	Little Snake River near Lily, CO 67 ft^3 @ 5 µg/L	Yampa River near Deerlodge, CO 444 ft^3 @ 7 µg/L
End of Pipe[2]	Resulting Solution (µg/L[3])		
1.27 ft^3 @ 2 µg/L[3]	3.70	4.94	6.99
1.27 ft^3 @ 5 µg/L[3]	6.26	5.00	6.99
1.27 ft^3 @ 9 µg/L[3]	9.66	5.07	7.01

1. Water volumes are low instantaneous volumes for the month of August obtained from the USGS guaging stations displayed in the National Water Information System (http://waterdata.usgs.gov). The concentrations associated with the system locations are the maximum Se concentrations ever recorded for that particular guaging station.
2. The concentrations for End of Pipe are hypothetical potentials up to the 9 µg/L that is permitted by the DEQ permit.
3. µg/L indicate potential concentrations of Se

The primary intent of the analysis in Table 1-2 is to display the amount of relative impact that the addition of 1.27 cfs of effluent at varying selenium concentrations could have on the existing environmental conditions along the Upper Colorado River System extending down to the Critical Habitat in the main stem of the Yampa River, CO. The assumptions that were made for the analysis displayed in Table 1-2 are as follows:

1. The environmental water contained the maximum concentration of selenium ever recorded for the system location at the time of mixing. The maximum concentrations usually occur in December for the three sites.
2. The environmental flows were at the average minimum flows for the year. Based on monthly averages, the minimum flows in Muddy creek occurred in August, and therefore the flows for August were used for the other locations as well.
3. There was no conveyance loss of water through the system (similar to 100% of the effluent being piped to each respective site).
4. The water pH, temperature, and chemistry remained constant and had no effect on the selenium.
5. The equation used to calculate the "Resulting Solution" values was $[v1(m1/vu)] + [v2(m2/vu)]/(v1 + v2)$ where $v1 = 1.27\ ft^3$, m1 = hypothetical mass in µg of Selenium

associated with v1, m2 is the actual worst case concentration of selenium at the associated gauging station, vu = the unit of measure for volume (i.e. ft^3), v2 = the volumes associated with the respective lows for the gauging stations.

6. 1 ft^3 = 28.31684659 L

Assumptions #1 and #2 were included so that a recognizable worst case scenario could be analyzed. Assumptions # 3 and #4 were included to maintain the integrity of the analysis for Table 1-1. Also the data for these assumptions is variable through time and/or are currently unavailable. It is known however, that site specific levels of selenium are highly variable and could have an impact on the overall selenium loading at each respective point.

This analysis was also performed in a manner to reflect the worst case scenario. That is to say, if 100% of the effluent were piped to each segment of the system with no allowance for upstream dilution. This analysis is also based on low flow volumes, and the highest recorded selenium concentrations at each respective gauging station. The table displays that there is insignificant impact to the overall selenium loading from the addition of selenium carrying effluent to the system at a level of 1.27 cfs. An important note is that the largest negative impact to a given discharge point and resultant system would occur when the effluent was at a substantially higher volume and concentration than the ambient water into which it was being discharged. This is somewhat demonstrated by the combination of 1.27 ft^3 @ 9 µg/L-Se with 0.22 ft^3 @ 13.5 µg/L-Se. It is intuitive that given a lower concentration of ambient water at the discharge point, the resultant solution could be at a much higher concentration. However, the converse is also true. If the effluent is at a large volume and low concentration compared to the water at the discharge location, then there would be dilution of the concentration in the system. This is clearly demonstrated by the result of combining 1.27 ft^3 @ 2 µg/L-Se with 0.22 ft^3 @ 13.5 µg/L-Se.

In the event of potential unknown impacts, a determination should err on the side of conservation for the species. This is one of the primary underlying philosophies that went into the development of this BA, and the reason that recognizable worst case scenario analyses were performed. Taking into account the analysis discussed above, it has been determined that this proposed action **May Affect, but is Not Likely to Adversely Affect** the four species of Endangered Colorado River fish. It is also determined that there will be **No Effect** to the designated critical habitat. The important points that lead to this determination are the fact that there is currently less than 1µg/L of selenium in the effluent. The average baseline in Muddy creek is approximately 4.4 µg/L of selenium. The analysis above displays that the addition of 1.27 cfs from the proposed action into the Colorado River system is insignificant when considering the overall volumes of the system. The distance from the proposed discharge point to the designated critical habitat is approximately 98 river miles. Finally, it is unlikely that any of these species occur in Muddy Creek and the last documentation of any of the Endangered Colorado River fish in the Little Snake River in Wyoming was in 1990.

Migratory Birds

The Migratory Bird Treaty Act, 16 U.S.C. 703, enacted in 1918, prohibits the taking of any migratory bird, their parts, nests, or eggs except as permitted by regulations and does not require intent to be proven. Section 703 of the Act states, "Unless and except as permitted by regulation…it shall be unlawful at any time, by any means or in any manner, to…take, capture, kill, attempt to take, capture, or kill or possess…any migratory bird, any part, nest, or eggs of

any such bird…." The Bald Eagle and Golden Eagle Protection Act, 16 U.S.C. 668, prohibits knowingly taking, or taking with wanton disregard for the consequences of an activity, any bald or golden eagles or their body parts, nests, or eggs, which includes collection, molestation, disturbance, or killing.

There are several migratory birds, including both long-distance and local migrants, that have the potential to nest within and adjacent to the proposed project area. The primary impact that may occur to migratory birds because of this proposed action is that of potential nesting habitat loss in the uplands. The proposed site facility as well as the proposed pipeline will remove approximately 31.9 acres of potential nesting habitat. The proposed project contains sagebrush/mixed grass habitat, and other kinds of habitat such as greasewood, which may contain nesting habitat for the following migratory birds that are identified on the BLM Wyoming State Director's Sensitive Species List: sage thrasher, loggerhead shrike, Brewer's sparrow, sage sparrow, and Baird's sparrow (grassland). There are mitigations in place for installation of powerlines (i.e., the 2006 APLIC guidelines), and other above ground facilities. There are also disturbance buffer restrictions in place between February 1 and July 31 to protect raptor nesting activities.

Another impact that may occur as a result of the proposed action is that associated with the effluent constituents. As stated above, selenium is a known bio-accumulator that has the potential to cause loss of reproductive success, and in extreme cases direct mortality of migratory waterfowl and shorebirds. The greatest potential for these impacts is in Muddy Creek from the discharge point down to the confluence with the Little Snake River. This is the part of the system with the lowest annual flows, and currently highest baseline selenium concentration levels (see Table 1-2). These potentially detrimental impacts would occur if the effluent had higher concentrations of selenium than the baseline. The levels of selenium in the produced water are currently below 1 µg/L. However, the approved WYPDES permit allows up to 9 µg/L-Se.

APPLIED CONSERVATION MEASURES

Endangered Colorado River Fish Species

1. **WYPDES Permit (#WY0054038) Requirements:**
    a. The allowable selenium discharge is 9 µg/L. According to the Wyoming DEQ and the EPA, this is considered to be protective of the aquatic environment that will be impacted by this proposed action. The 9 µg/L limit was achieved through standard process whereby the state performs a mixing calculation based on EPA direction.
    b. Acute and chronic Whole Effluent Toxicity (WET) tests will be performed on an annual basis. If toxicity is detected then a TIE/TRE analysis will be undertaken to determine the cause/causes of the toxicity.
    c. Water quality will be analyzed at the end of pipe within 60 days of the time discharge is initiated. This analysis will include total recoverable selenium set at a 5 µg/L detection limit.
    d. Water quality will be monitored regularly at the end of pipe. Total recoverable selenium, total petroleum hydrocarbons, among other constituents will be monitored on an annual basis.
    e. Water quality will be monitored at designated stations within Muddy Creek and the

Little Snake River. In general the locations of these monitoring points are above and below the discharge point, on Muddy Creek near Baggs, and on the Little Snake River above and below the confluence of Muddy Creek. The parameters that will be monitored on a monthly basis at these locations are dissolved calcium, dissolved magnesium, dissolved sodium, SAR, specific conductance, temperature, flow, and TDS.

2. **Erosion Monitoring:**
   a. The WYPDES permit (# WY0054038) implements channel erosion limits allowing a change of 4 feet per year, which WDEQ has determined to be protective of the aquatic environment. Double Eagle is required to monitor erosion on an annual basis.

3. **Re-initiation of Analysis:**
   a. In the event that additional surface water discharge is proposed above and beyond what has been analyzed by NEPA and section 7 of the ESA for these same facilities, the proponent will be required to provide the new WYPDES permit and a sundry notice to the BLM for review. At that time, if it is determined that there would be impacts beyond what was analyzed in the initial NEPA document and this section 7 consultation, then another NEPA analysis and associated section 7 consultation would be conducted. If the newly identified discharge is of a level that requires corrective actions that are under the authority of the BLM then a Written Order will be prepared to address those concerns.
   b. A new environmental analysis as well as section 7 consultation would be required prior to any increase in effluent discharge that has been identified for this proposal. There would also be an environmental analysis and section 7 consultation performed for any future surface discharge into the Colorado River system.
   c. If any of the listed Colorado River fish species are identified within the Muddy Creek drainage, a new section 7 consultation would be initiated.

4. **Other Potential Conservation Measures:**
   a. The BLM may also require monitoring at the end of pipe, as well as other points downstream of the proposed discharge points. An example of the monitoring that may be implemented by the BLM would be to require a detection limit of 1 μg/L of selenium. If the levels of constituents are above recognized thresholds, appropriate action will be taken to attempt to reduce the levels of these constituents. Appropriate action may include documentation and reporting of the situation to the appropriate enforcement agency or steps taken to reduce the constituent of concern through established mechanisms.

Migratory Birds

5. **Timing Stipulations:**
   a. A timing stipulation is in effect for protection of migratory raptors from February 1-July 31. During this timing restriction, no surface disturbing or disruptive activities are allowed. This timing restriction would serve to protect other migratory bird species as well.

Under the provisions of section 7 of the ESA a letter of concurrence with the determinations, or further recommendation and guidance is requested at this time. If you have any questions or need additional information, please contact Rhen Etzelmiller, Wildlife Biologist, at the address shown above or phone (307) 328-4370.

Sincerely,

Field Manager

Enclosure

1 –Reference materials.

Literature Cited

- Hamilton SJ. 2002. Rationale for a tissue based selenium criterion for aquatic life. Aquat Toxicity 57: 85-100.
- Skorupa, J.P., and H.M. Ohlendorf. 1991. Contaminants in drainage water and avian risk thresholds. In: A. Dinar and D. Zilberman, eds., The Economics and Management of Water and Drainage in Agriculture. Kluwer Academic Publishers. Norwell, Massachusetts. Pages 345-368.
- Lemly, A.D. 1993. Guidelines for evaluating selenium data from aquatic monitoring and assessment studies. Environmental Monitoring Assessment 28:83-100.
- Ramirez, P. 2005. Assessment of Contaminants Associated with Coal Bed Methane-Produced Water and Its Suitability for Wetland Creation or Enhancement Projects. U.S. Fish and Wildlife Service, Ecological Services, Cheyenne, WY. Contaminant Report Number: R6/721C/05.
- Ohlendorf, H.M., A.W. Kilness, J.L. Simmons, R.K. Stroud, D.J. Hoffman, and J.F. Moore. 1988. Selenium toxicosis in wild aquatic birds. Journal of Toxicology Environment and Health 24:67-92.