Appendix B.

CRS Report to Congress on Helium Divestment. October 9, 1996.: Abstracted Portion

RE: http://ncseonline.org/NLE/CRSreports/Natural/nrgen-11.cfm?&CFID=8020441&CFTOKEN=57798360, 9 October 1996, Accessed: 04/08/10

Helium, present in relatively high concentrations in only a few natural gas fields, is released to the atmosphere and wasted when the natural gas is burned as fuel. Government involvement in helium conservation dates to the Helium Act of 1925 which authorized the Bureau of Mines to build and operate a large-scale helium extraction and purification plant. From 1929 until 1960 the federal government was the only domestic helium producer. In 1960, Congress amended the Helium Act to provide incentives to natural gas producers for stripping natural gas of its helium, for purchase of the separated helium by the government, and for its long-term storage. With over 960 million cubic meters (34.6 billion cubic feet) of helium in government storage and a large private helium recovery industry, questions arise as to the need for either the federal helium extraction program or the federally maintained helium stockpile.

Amid controversy between Congress and the President over the Department of the Interior appropriations and the federal budget, the Bureau of Mines has been terminated. The budget battle has not been fought over the Bureau of Mines specifically, but it has become a casualty of the conflict. Several functions have been transferred to other agencies within the Department of the Interior or to other departments. (See Endnote 1.)

In a move which would take the federal government out of the helium business, Congress passed the Helium Privatization Act (H.R. 873) as part of the Seven-Year Balanced Budget Reconciliation Act of 1995 (H.R. 2491). Although the measure died when the President vetoed the Budget Act on December 6, 1995, the Administration has made a goal the privatization of the federal helium program. On April 30, 1996, the House suspended the rules and passed H.R. 3008, the Helium Privatization Act as agreed to in the House-Senate conference on the Budget Act. Subsequently, the Senate Energy and Natural Resources Committee amended the bill to provide for the National Academy of Sciences to study how best to dispose of the helium reserve. On September 26, 1996, with limited time remaining for the 104th Congress, the House again suspended the rules and passed H.R. 4168, a new bill containing the Senate Committee language. This would avoid the need for a conference if the Senate would also pass the same bill. The Senate did so on September 28, 1996. This report reviews the origin and development of the Federal Helium Program; analyzes the choices that Congress faced in terminating the program; reviews the issues that the National Academy of Sciences will study, and summarizes H.R. 4168.

Background

Helium is an inert gas with unique properties. It is used in large quantities in space, defense, and advanced energy systems. Its major uses include cryogenics in medical and superconductivity applications, cover gas in arc welding, and for pressurizing and purging fuel tanks and vessels in the space program. Other important uses include breathing gas mixtures for deep sea diving, controlled atmospheres for growing crystals for transistors, heat transfer mediums for nuclear power generators, leak detection, chromatography, and lifting gas. If temperatures below -429 F are required, there is no substitute for helium. Argon can be substituted for helium in welding and hydrogen for helium as a lifting gas if flammability is not a concern.

Federal interest in helium began with World War I when its military value as an inert lifting gas was recognized by the Army and Navy. The Bureau of Mines' involvement in the Helium Program dates back to passage of the Helium Act of 1925 under which the Bureau was authorized to build and operate a large-scale helium extraction and purification plant. This plant went into operation in 1929 at Amarillo, Texas. Demand increased significantly during World War II and four more plants were built, including the Exell, Texas plant, which is now the Bureau's only operating plant. Private helium operations followed passage of the Helium Act Amendments of 1960 (P.L. 86-777) which authorized the Secretary of the Interior (authority delegated to the Bureau of Mines) to enter into long-term contracts for the acquisition and conservation of helium to be stored in the Cliffside Reservoir near Amarillo, Texas. The Act directed the Secretary of the Interior to operate and maintain helium production and purification plants and related storage, transmission, and shipping facilities. The Act also authorized the Secretary to borrow from the Treasury up to $47.5 million per year, at compound interest, to purchase helium in lieu of direct appropriations. The 1960 Act required the Secretary of the Interior to determine the net worth of assets of the Helium Program acquired prior to 1960 ($40 million) and establish this as debt in the Helium Fund to which subsequent borrowing would be added. The Act stipulated that the Bureau of Mines set prices that would cover all of the program's costs, including debt and interest, and provided a period of 25 years to pay back the debt (with a 10-year extension to 1995). In addition, federal agencies and contractors were required to buy helium from the Bureau of Mines.

As a result of the 1960 Act, four private natural gas producing companies built five helium extraction facilities and entered into 22-year contracts with the Bureau of Mines. Because demand for helium did not meet the forecast of the late 1950s, the Bureau of Mines began to borrow from the Treasury as authorized to pay for helium purchases. In 1973, the government had 970 million cubic meters (35 billion cubic feet) of helium in storage, which was far in excess of projected government needs, and canceled the purchase contracts. This led to several years of litigation during which most private helium extraction plants remained idle.

Helium is a constituent of natural gas deposits ranging from a trace to about 8 percent by volume. Helium is also a minor constituent (0.0005 %) of the atmosphere. Most natural gas is burned as fuel without first recovering the helium. Consequently, much helium is lost to the atmosphere and diluted beyond effective recovery.

The helium resources of the United States are estimated to be about 13 billion cubic meters (470 billion cubic feet). This includes 1.0 billion cubic meters (34 billion cubic feet) in storage in the government stockpile, 6.8 billion cubic meters (250 billion cubic feet) in helium-rich natural gas (0.3% helium or more), and 5.2 billion cubic meters (190 billion cubic feet) in helium-lean natural gas (less than 0.3% helium). Other than the two major helium-rich natural gas fields (Riley Ridge in southwestern Wyoming and Hugoton extending from southwest Kansas through the Oklahoma and Texas Panhandles), most of the helium-rich natural gas fields in the United States will be exhausted by the year 2000. (See Endnote 2.) As these fields deplete, future production will probably shift to extracting helium from helium-rich natural gas with little fuel value and from helium-lean resources.

World helium resources exclusive of the United States are estimated at 18 billion cubic meters (650 billion cubic feet) of which 9.2 billion cubic meters are in the former Soviet Union, mostly in Russia. Other helium resources are located in Algeria, 2.1 billion cubic

meters; Canada, 2.1 billion cubic meters; China, 1.1 billion cubic meters; Poland, 0.8 billion cubic meters; and the Netherlands, 0.7 billion cubic meters.

Prior to passage of the Helium Act Amendments of 1960, the only helium extraction plants in the world were those owned by the U.S. Bureau of Mines. The United States remains the world's major producer and consumer of helium, consuming approximately 72 million cubic meters and exporting 24 million cubic meters in addition. The United States exports over 4 times as much helium as is produced in all of the rest of the world. The total sales value of domestic consumption and exports of refined helium is nearly $200 million of which the government produces less than 10%. Domestic production comes from the government helium extraction plant in Texas and twelve privately owned plants (five in Kansas, four in Texas, and one each in Colorado, Utah, and Wyoming).

Appendix B
Project Design Schematics

Drilling Prognosis

Well:	**Riley Ridge 20-14**	**AFE No.:**	247007
County, State	Sublette Co., WY	**API #:**	49-035-26670
Surface Location:	836' FSL & 2442' FEL Sec 17 T29N R114W	**Property No.:**	497199-003
Wellhead:	16" 5M SOWx 16-3/4" 5M x 13-5/8" 5M x 11"5M	**Field:**	Riley Ridge Field
Tubing Head:	5-1/8" 5M side valves		
Xmas Tree	11" 5M with 5-1/8" 5M bore & side valves		
Tubing:	5-1/2" 17# SM2245/VM825 120 VAM Top Reg 12,800' MD / 12,245' TVD	5" 15# SM2245/VM825 120 FJL 15,880' MD / 15,266' TVD (3,080')	

Hole Size	Formation Tops / Logs	Cement	Mud Weight
24"	**140' 30" Conductor** **2,225' 16" 84# P-110 BTC**	Lead cement, 3510 sx. Yld 1.8 @12.5 ppg. (1181.5 bbls), Tail 855 sx. Yld 1.21 @15.4 ppg. 184 bbls Total cement to surface approx. 605 bbls.	
14-3/4"	**TOC 4,750' per bond long 7/25/09** **9,427' MD / 9,016' TVD 10-3/4" 65.7# HCQ-125 BTC**	Pump 50 bbls 10.0 ppg spacer, mix & pump 1030 sacks premium lite lead cmt + .2% R-3 + .2% FL-63 + .25% CD-32 .04 static free + 1gal/100 sks FP-13L; followed by 290 sacks class G tail cmt + 3% fL-63 + .25% R-3 + .2% CD-32 + 20% silica sand + .04 static free + 1gal/100 sks FP-13L.	
9-1/2"	**11,500' MD 11,000' TVD Planned TOC** **Salt** **Packer set at 15,880' MD/15,266' TVD** **2,386' MD/2,386'TVD 7-5/8" 39# C-110 TC-II** **12,872' MD/12,317'TVD 7-5/8" 39# T-95 TC-II** **14,364' MD/13,762'TVD 7-5/8" 55.30# L-80 LTC** **16,895' MD/16,280'TVD 7" 32# HCL-80 LTC**	Pump 50 bbls Ultra Spacer at 11.2 ppg. Lead Cement 336 sks Light weight + 5% alt + 1% FL-63 + 0.06 gps R-8L + 5% MPA-3 + 20% Silaca Flour mixed at 12.0 ppg. yield 3.06, total slurry 183 bbls.(TOC estimate 11,500' md/11,000' TVD) Tail Cement 410 sks 50:50:2 + 1% FL-63 + .08 gps R-8L + 0.5% SMS + 20% Silica Flour + 1 gal/100sk FP-13L mixed at 14.5 ppg. yield 1.41, total slurry 103 bbls. (TOC estimate 15,400' md/14,800' tvd)	

TI 251 _ _ _ _ _

RCMS Code: CU

230 kV Structure—Shielded, Single-Circuit—Dead-End, 15° to 65°

May be used
In raptor areas

Scope

This structure is used for strain deadends with line angles up to 65° when shielding is required.

Line Angle: 15° to 65°

Standard References

TD 001	*Poles—General Information*
TD 100	*Conductor—General Information*
TD 200	*Shield and Guy Wire—General Information*
TD 300	*Grounding—General Information*
TD 500	*Tension Hardware—General Information*
TD 600	*Guys and Anchors—General Information*
TD 800	*Insulators—General Information*
TD 900	*Bolts, Nuts, and Washers—General Information*

Conductor	Code
1/0 ACSR "Raven"	A
4/0 ACSR "Penguin"	B
397.5 ACSR "Ibis"	C
795 ACSR "Drake"	D
954 ACSR "Cardinal"	E
1272 ACSR "Bittern"	F
795 AAC "Arbutus"	G
1272 AAC "Narcissus"	H
None	Z

Conductor Accessories	Code
Suspension Hardware	
Armor rod	A
Line guard	B
None	Z
Tension Hardware Compression Fittings	
Jumper w/armor rod	C
Jumper w/o armor rod	D
Tension Hardware Bolted Fittings	
Jumper w/armor rod	E
Jumper w/o armor rod	F

Shield Wire	Code
3/8 EHS	A
1/2 EHS	B
7#8 AW	C
7#6 AW	D
3/8 EHS w/AGS	E
1/2 EHS w/AGS	F
7#8 AW w/AGS	G
7#6 AW w/AGS	H
3/8 EHS w/armor rod	I
1/2 EHS w/armor rod	J
7#8 AW w/armor rod	K
7#6 AW w/armor rod	L
None	Z

Insulation	Code
Porcelain	A
Polymer	B

Pole Class	Species	Code
3	Douglas fir	A
2	Douglas fir	B
1	Douglas fir	C
H1	Douglas fir	D
H2	Douglas fir	E
3	Western red cedar	F
2	Western red cedar	G
1	Western red cedar	H
H1	Western red cedar	I
H2	Western red cedar	J

TI 251

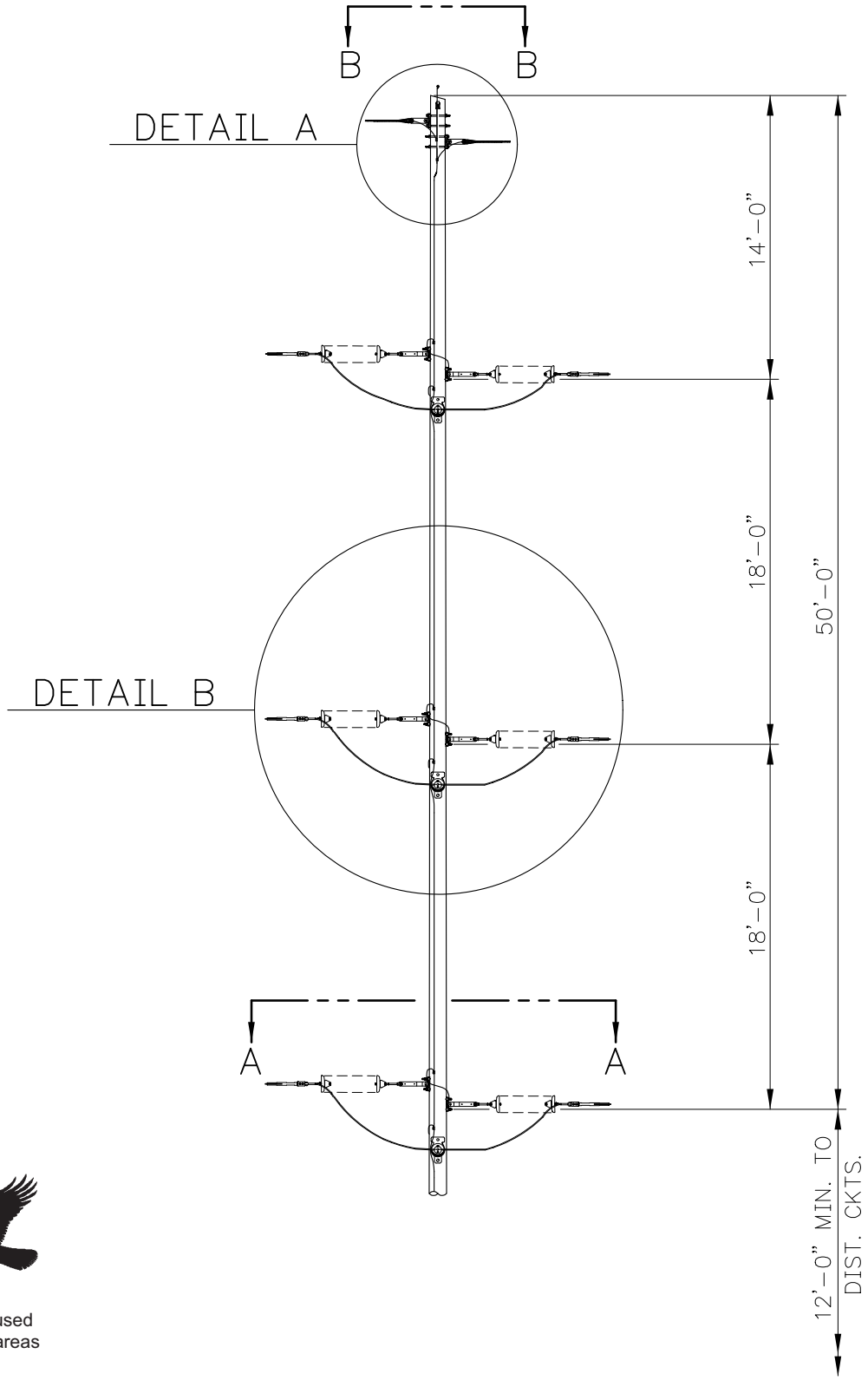

May be used
In raptor areas

PACIFICORP PACIFIC POWER UTAH POWER		230 kV Structure Shielded, Single-Circuit Dead-End, 15° to 65°	Transmission Construction Standard
TI 251 Page 2 of 4	17 Mar 97		Stds Team Leader (C. L. Wright): CLW Standards Services (M. Brimhall): MB

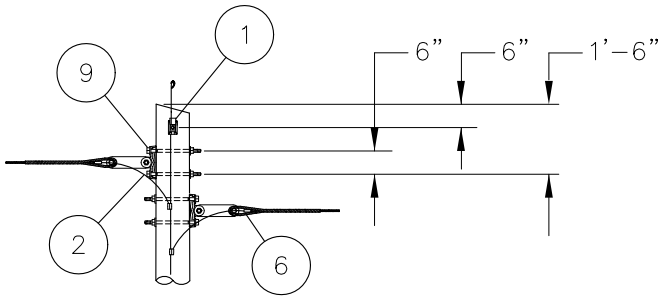

DETAIL A

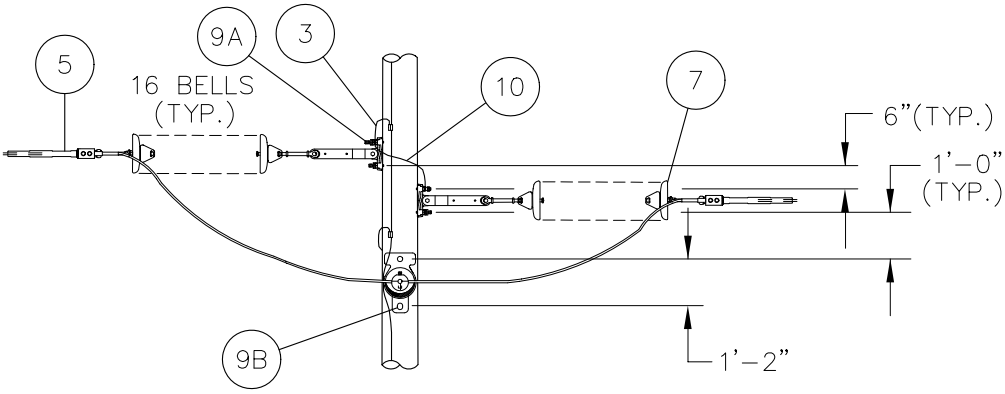

DETAIL B

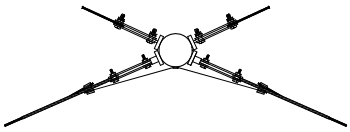

SECTION B-B

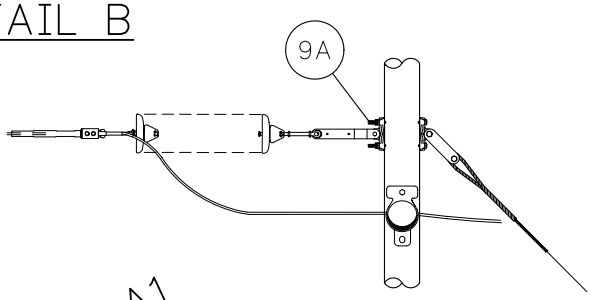

SECT. A1-A1

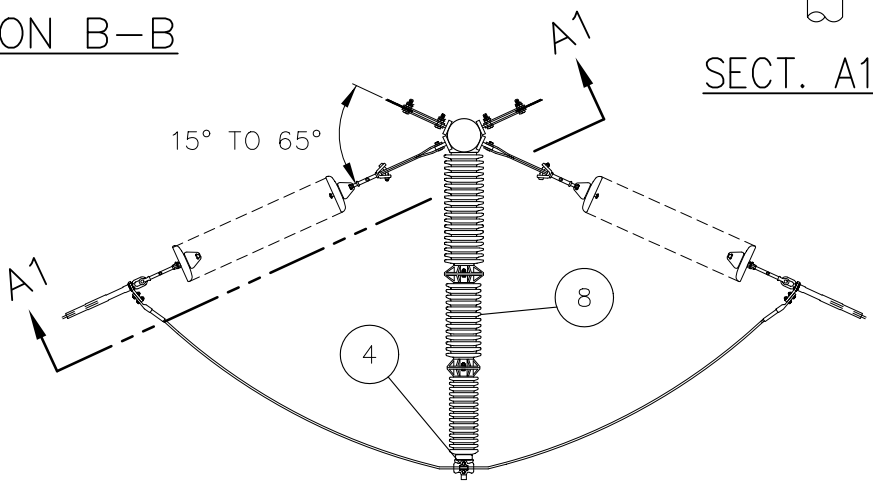

SECTION A-A

Transmission Construction Standard	230 kV Structure Shielded, Single-Circuit Dead-End, 15° to 65°	PACIFICORP PACIFIC POWER UTAH POWER	
Stds Team Leader (C. L. Wright): CLW Standards Services (M. Brimhall):		17 Mar 97	TI 251 Page 3 of 4

Table 1 – Components

Item	Qty.	Standard	Description
1	1	TD 022_	Pole Assembly, Split-Bolt, 3/4” Diameter
2	2	TD 325_	Grounding Assembly, Shield Wire–to–Pole Ground
3	6	TD 322E	Grounding Assembly, Hardware-to-Structure Ground
4	3	TD 420_ _ A	Suspension Assembly, Conductor
5	6	TD 520_ _	Tension Assembly, Conductor
6	2	TD 525_ A	Tension Assembly, Shield Wire, Guy Grip
7	6	TD 826E _ A	Insulator Assembly, Dead-End, with Link
8	3	TD 831F	Insulator, Post, Horizontal, Polymer
8	3	TD 835F	Insulator, Post, Horizontal, Porcelain
9A	16	■TD 928_ D	Bolt Assembly, Machine, 1-Inch
9B	6	TD 928_ E	Bolt Assembly, Machine, 1-Inch
10	4	TD 321E Z	Grounding Assembly, Hardware–to–Hardware

Table 2 – Additional Material To Be Specified To Complete This Structure

Item	Qty.	Standard	Description
A	1	TD 020_ _ A	Wood Pole Assembly
B	8	TD 620A _ _ _	Guy Assembly
C	AS REQ	TD 630_ _ _	Anchor Assembly

Notes

1. All hardware is to be bonded when it is separated by less than 8 inches. Bond wire shall loop around the bolt.
2. Install spring washers with loop end up where possible.
3. All pole attachment hardware shall be bonded to the pole grounding assembly.
4. In contaminated areas, use TD 840, code “F” for post insulators.
5. ■ Class 1 or better pole is recommended.

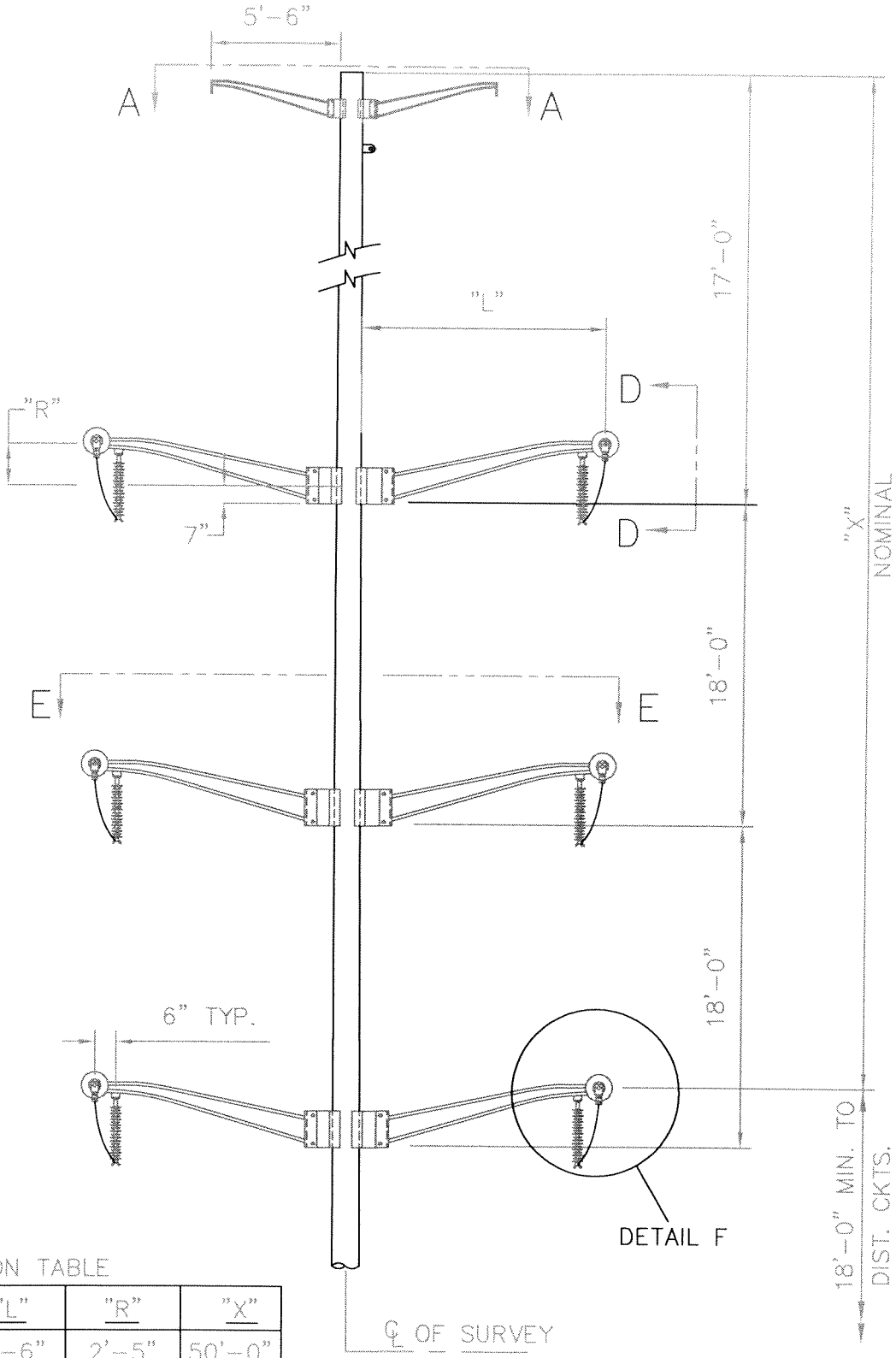

DIMENSION TABLE

LINE ANGLE	"L"	"R"	"X"
0°-30°	9'-6"	2'-5"	50'-0"
30°-60°	10'-6"	2'-9"	49'-8"
60°-90°	12'-6"	3'-5"	49'-0"

REV	DATE	DESC.	BY	CHK	APP

ER/PR		230KV STRUCTURE SHIELDED, D. C. DEADEND, 0° TO 90°, STEEL POLE W/ DAVIT ARMS	PACIFICORP PACIFIC
DATE	6 SEPT 06		
ENG	DES		SHEET 1 of 2 / SCALE NONE
DR	CH		
APP			T1285 / REV. 0

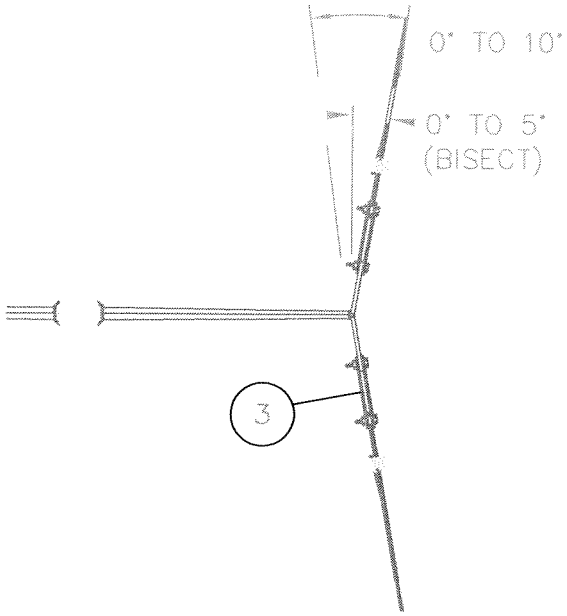

SECTION A–A

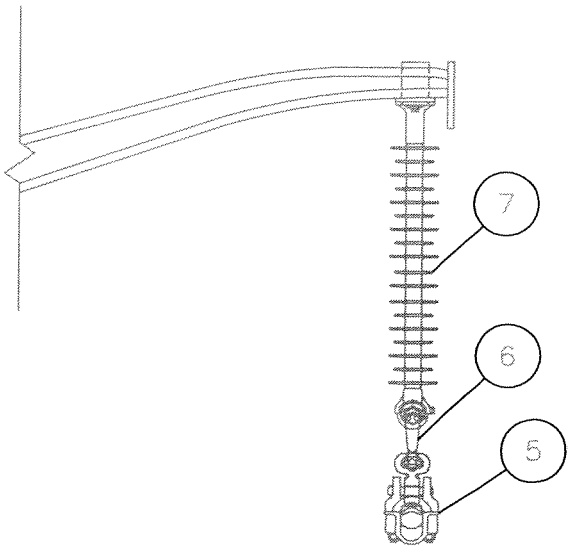

DETAIL F

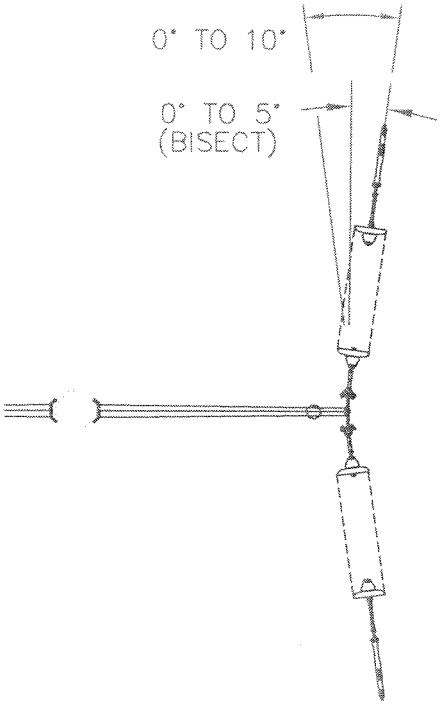

SECTION E–E

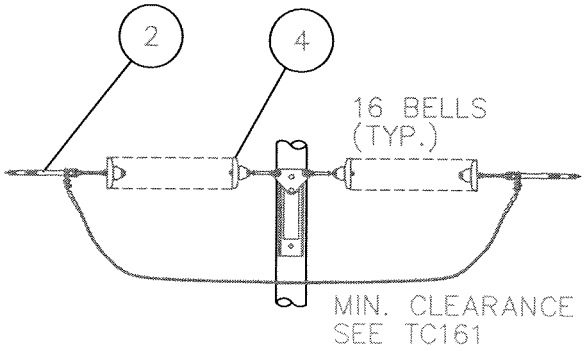

SECTION D–D

(TYPICAL)

REV	DATE	DESC.	BY	CHK	APP

ER/PR		230KV STRUCTURE SHIELDED D. C. DEAD–END, 0° TO 90°, STEEL POLE W/ DAVIT ARMS	PACIFICORP PACIFIC
DATE	9/6/06		
ENG	DES		
DR	CH		SHEET 2 of 2 / SCALE NONE
APP			TI285F2 / REV. 1

TI 403 _ _ _ _ _

RCMS Code: CU

May be used
In raptor areas

230 kV Structure—Shielded, H Frame—Tangent, with Steel Truss

Scope

This structure is used when shielding is required.

Line Angle: 0° to 1°

Standard References

TD 001	*Poles—General Information*
TD 100	*Conductor—General Information*
TD 200	*Shield and Guy Wire—General Information*
TD 300	*Grounding—General Information*
TD 400	*Suspension Hardware—General Information*
TD 700	*Crossarms and Braces—General Information*
TD 800	*Insulators—General Information*
TD 900	*Bolts, Nuts, and Washers—General Information*

Conductor	Code
1/0 ACSR “Raven”	A
4/0 ACSR “Penguin”	B
397.5 ACSR “Ibis”	C
795 ACSR “Drake”	D
954 ACSR “Cardinal”	E
1272 ACSR “Bittern”	F
795 AAC “Arbutus”	G
1272 AAC “Narcissus”	H
None	Z

Conductor Accessories	Code
Suspension Hardware	
Armor rod	A
Line guard	B
None	Z
~~Tension Hardware Compression Fittings~~	
~~Jumper w/armor rod~~	~~C~~
~~Jumper w/o armor rod~~	~~D~~
~~Tension Hardware Bolted Fittings~~	
~~Jumper w/armor rod~~	~~E~~
~~Jumper w/o armor rod~~	~~F~~

Shield Wire	Code
3/8 EHS	A
1/2 EHS	B
7#8 AW	C
7#6 AW	D
3/8 EHS w/AGS	E
1/2 EHS w/AGS	F
7#8 AW w/AGS	G
7#6 AW w/AGS	H
3/8 EHS w/armor rod	I
1/2 EHS w/armor rod	J
7#8 AW w/armor rod	K
7#6 AW w/armor rod	L
None	Z

Insulation	Code
Porcelain	A
Polymer	B

Pole Class	Species	Code
3	Douglas fir	A
2	Douglas fir	B
1	Douglas fir	C
H1	Douglas fir	D
H2	Douglas fir	E
3	Western red cedar	F
2	Western red cedar	G
1	Western red cedar	H
H1	Western red cedar	I
H2	Western red cedar	J

TI 403

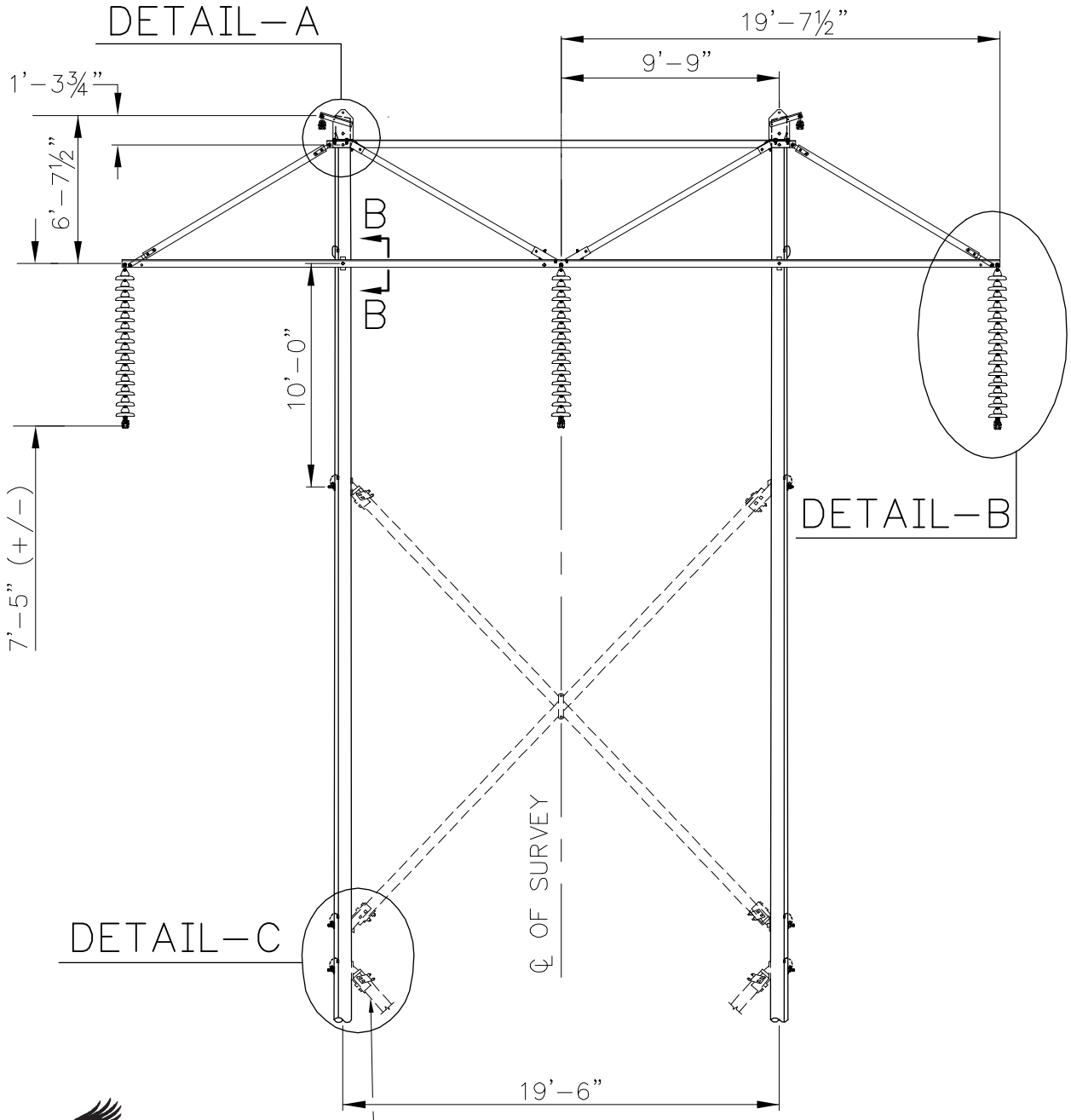

May be used
In raptor areas

PACIFICORP PACIFIC POWER UTAH POWER		**230 kV Structure Shielded, H Frame Tangent, with Steel Truss**	**Transmission Construction Standard**
TI 403 Page 2 of 4	27 May 97		Stds Team Leader (C. L. Wright): CLW Standards Services (M. Brimhall): MWB

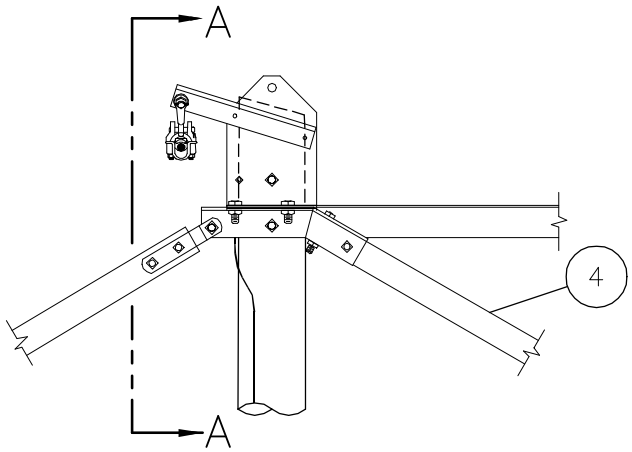

DETAIL A

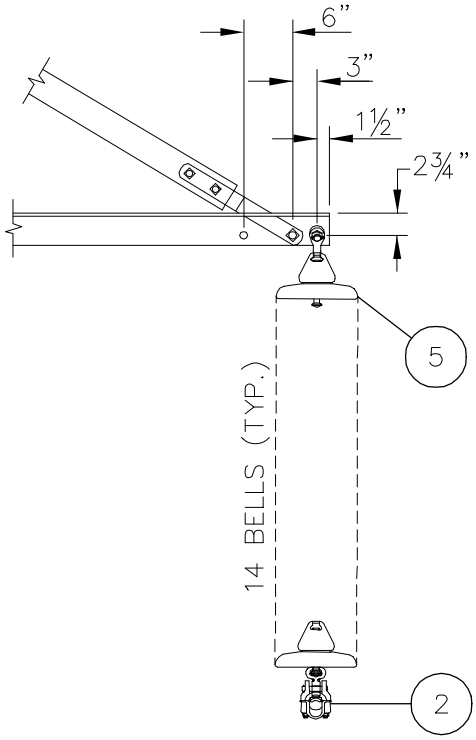

DETAIL B

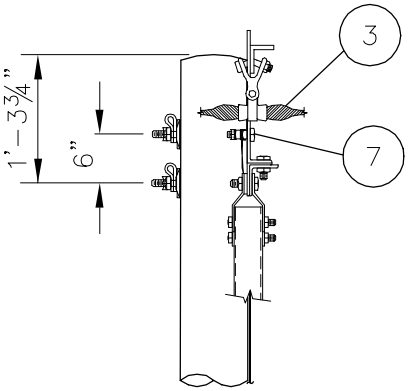

SECTION A–A

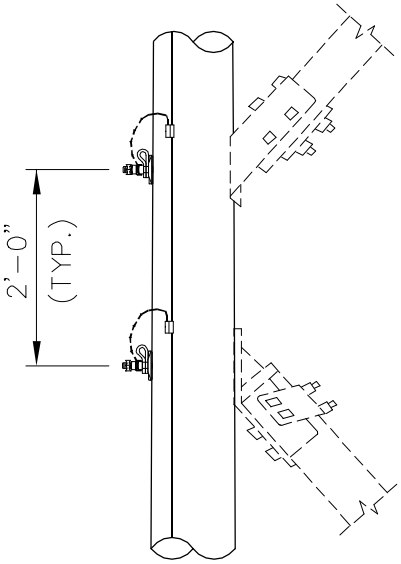

DETAIL C

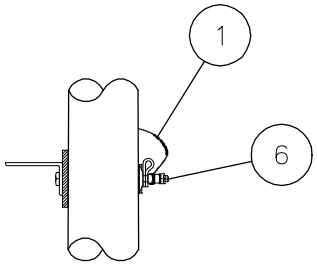

SECTION B–B

Transmission Construction Standard	230 kV Structure Shielded, H Frame Tangent, with Steel Truss	PACIFICORP PACIFIC POWER UTAH POWER	
Stds Team Leader (C. L. Wright): CLW Standards Services (M. Brimhall): MMB		27 May 97	TI 403 Page 3 of 4

Table 1 – Components

Item	Qty.	Standard	Description
1	2	TD 322D	Grounding Assembly, Hardware-to-Structure Ground
2	3	TD 420_ _ C	Suspension Assembly, Conductor
3	2	TD 425_ _ C	Suspension Assembly, Shield Wire
4	1	TD 728C	Arm Assembly, Suspension, Steel Truss
5	3	TD 824E _	Insulator Assembly, Suspension, Tangent
6	6	TD 927_ A	Bolt Assembly, Machine, 7/8-Inch
7	2	TD 361Z	Grounding Clip

Table 2 – Additional Material To Be Specified To Complete This Structure

Item	Qty.	Standard	Description
A	2	TD 020_ _ A	Wood Pole Assembly
B	1 or More	TD 774A _ A A	Brace, Cross, Wood Assembly with Double Bolt Connection

Notes

1. All hardware is to be bonded when it is separated by less than 8 inches. Bond wire shall loop around the bolt.
2. Install spring washers with loop end up where possible.
3. All pole attachment hardware shall be bonded to the pole grounding assembly.

TI 432 _ _ _ _ _

RCMS Code: CU

May be used
In raptor areas

230 kV Structure—Shielded, 3-Pole—Angle, 8° to 20°

Scope

This structure is used for small to medium line angles when shielding is required.

Line Angle: 5° to 30°

Standard References

TA 181	General—Blowout and Right-of-Way Width Considerations
TC 161	*Clearances—for Conductors on the Same Support*
TD 001	*Poles—General Information*
TD 100	*Conductor—General Information*
TD 200	*Shield and Guy Wire—General Information*
TD 300	*Grounding—General Information*
TD 400	*Suspension Hardware—General Information*
TD 600	*Guys and Anchors—General Information*
TD 700	*Crossarms and Braces—General Information*
TD 800	*Insulators—General Information*
TD 900	*Bolts, Nuts, and Washers—General Information*

Conductor	Code
795 ACSR “Drake”	D
954 ACSR “Cardinal”	E
1272 ACSR “Bittern”	F
795 AAC “Arbutus”	G
1272 AAC “Narcissus”	H
None	Z

Conductor Accessories	Code
Suspension Hardware	
Armor rod	A
Line guard	B
None	Z

Shield Wire	Code
3/8 EHS	A
1/2 EHS	B
7#8 AW	C
7#6 AW	D
3/8 EHS w/AGS	E
1/2 EHS w/AGS	F
7#8 AW w/AGS	G
7#6 AW w/AGS	H
3/8 EHS w/armor rod	I
1/2 EHS w/armor rod	J
7#8 AW w/armor rod	K
7#6 AW w/armor rod	L
None	Z

Insulation	Code
Porcelain	A
Polymer	B

Pole Class	Species	Code
1	Douglas fir	C
H1	Douglas fir	D
H2	Douglas fir	E
1	Western red cedar	H
H1	Western red cedar	I
H2	Western red cedar	J

TI 432

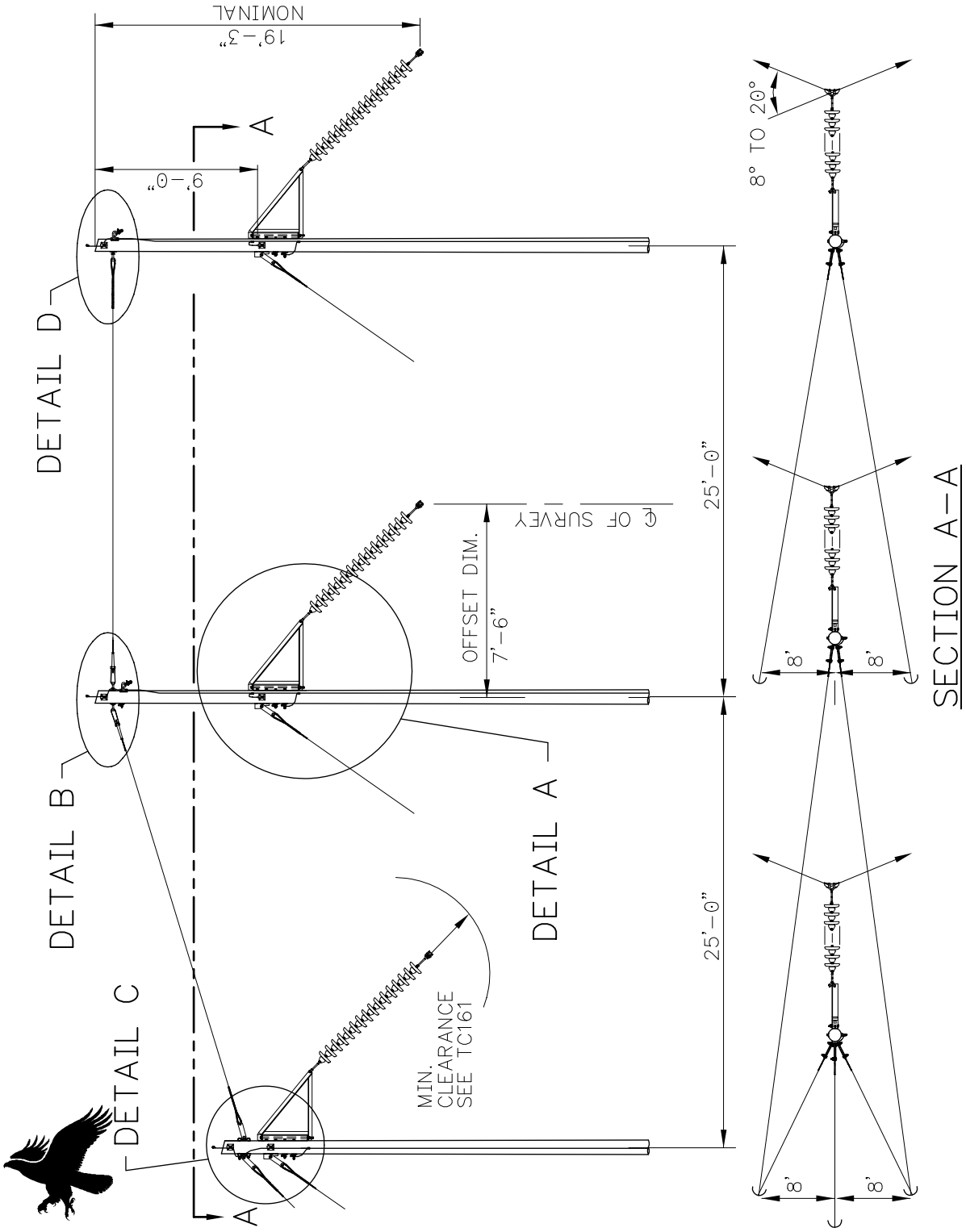

May be used
In raptor areas

PACIFICORP PACIFIC POWER UTAH POWER		**230 kV** **Structure—Shielded,** **3-Pole—Angle, 8° to 20°**	**Transmission** **Construction Standard**
TI 432 Page 2 of 4	6 Nov 00		Asset Policy Engineer (C. L. Wright): Asset Policy Manager (G. Shaw):

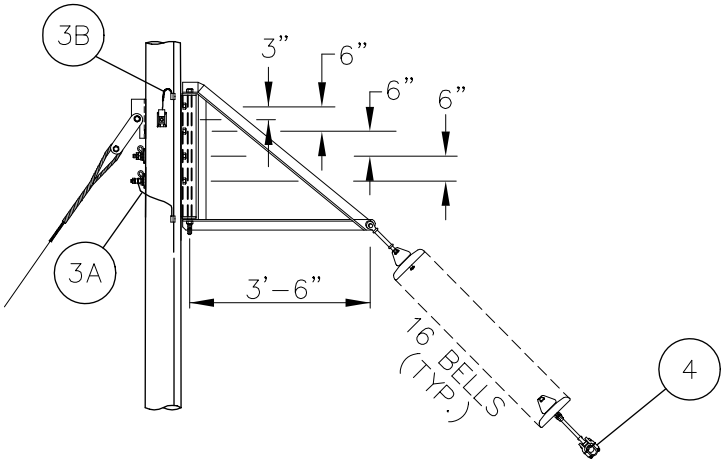

DETAIL A

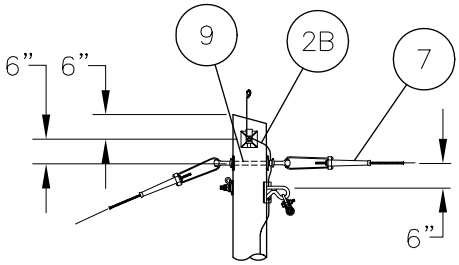

DETAIL B

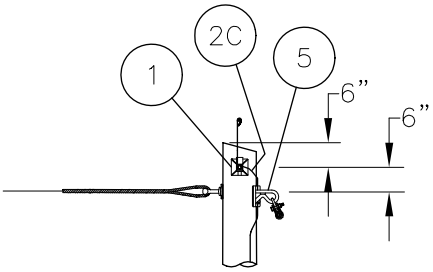

DETAIL D

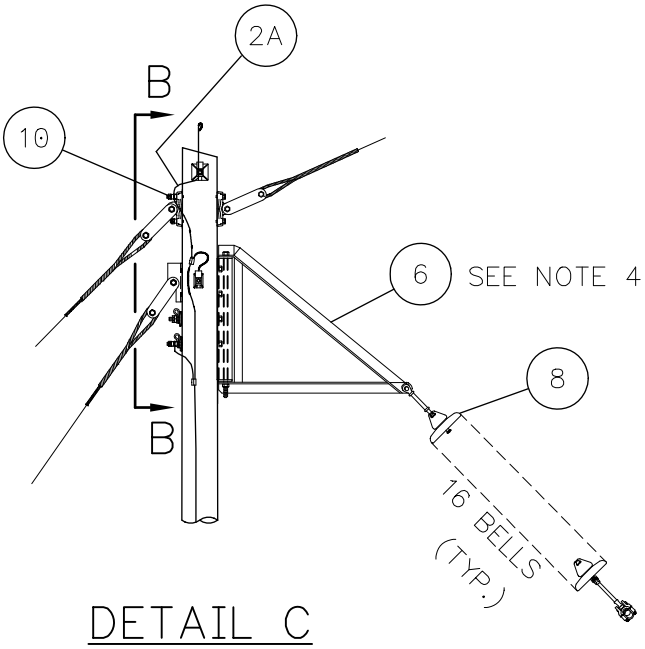

DETAIL C

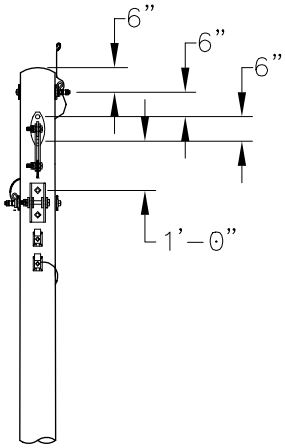

SECTION B–B

Transmission Construction Standard	230 kV Structure—Shielded, 3-Pole—Angle, 8° to 20°	PACIFICORP PACIFIC POWER UTAH POWER	
Asset Policy Engineer (C. L. Wright): CLW Asset Policy Manager (G. Shaw): GS		6 Nov 00	TI 432 Page 3 of 4

Table 1 – Components

Item	Qty.	Standard	Description
1	6	TD 022_	Pole Assembly, Split-Bolt, 3/4″ Diameter
2A	1	TD 321C E	Grounding Assembly, Hardware-to-Hardware
2B	1	TD 321C C	Grounding Assembly, Hardware-to-Hardware
2C	1	TD 321C Z	Grounding Assembly, Hardware-to-Hardware
3A	3	TD 322D	Grounding Assembly, Hardware-to-Structure Ground
3B	3	TD 322C	Grounding Assembly, Hardware-to-Structure Ground
4	3	TD 420_ _ D	Suspension Assembly, Conductor
5	2	TD 425_ _ A	Suspension Assembly, Shield Wire
6	3	TD 430E _ _	Bracket Assembly
7	1	TD 540_ F B	Tie Wire Assembly
8	3	TD 828E _	Insulator Assembly, Suspension or Strain, Y-Clevis Ball, Hot-Line
9	1	TD 921_ B	Bolt Assembly, Double-Arming, 3/4-Inch
10	2	TD 928_ D	Bolt Assembly, Machine, 1-Inch

Table 2 – Additional Material To Be Specified To Complete This Structure

Item	Qty.	Standard	Description
A	3	TD 020_ _ A	Wood Pole Assembly
B	1	TD 622_ _ _ _	Guy Assembly, Dead-End Tee Pole Attachment
C	3	TD 624_ _ _ _	Guy Assembly, 2-Bolt Splayed Channel Pole Attachment
D	AS REQ	TD 630_ _ _	Anchor Assembly

Notes

1. All hardware is to be bonded when it is separated by less than 8 inches. Bond wire shall loop around the bolt.
2. Install spring washers with loop end up where possible.
3. All pole attachment hardware shall be bonded to the pole grounding assembly.
4. See Notes section in TD 430 for installation details for attaching bracket assemblies to pole.
5. Clearance between the conductor and the structure shall be maintained under reverse wind conditions.
6. Class 1 or better pole is recommended.

TI 435 _ _ _ _ _

RCMS Code: CU

May be used
In raptor areas

230 kV Structure—Shielded, 3-Pole—Angle, 30° to 45°

Scope

This structure is used for medium line angles when shielding is required.

Line Angle: 30° to 45°

Standard References

TA 181	General—Blow-out and Right-of-Way Width Considerations
TC 161	*Clearances—for Conductors on the Same Support*
TD 001	*Poles — General Information*
TD 100	*Conductor—General Information*
TD 200	*Shield and Guy Wire—General Information*
TD 300	*Grounding—General Information*
TD 400	*Suspension Hardware—General Information*
TD 600	*Guys and Anchors—General Information*
TD 800	*Insulators—General Information*
TD 900	*Bolts, Nuts, and Washers—General Information*

Conductor	Code
795 ACSR "Drake"	D
954 ACSR "Cardinal"	E
1272 ACSR "Bittern"and 1557.4 ACSR/TW "Potomac"	F
795 AAC "Arbutus"	G
1272 AAC "Narcissus"	H
None	Z

Conductor Accessories	Code
Suspension Hardware	
Armor rod	A
Line guard	B
None	Z

Shield Wire	Code
3/8 EHS	A
1/2 EHS	B
7#8 AW	C
7#6 AW	D
3/8 EHS w/armor rod	I
1/2 EHS w/armor rod	J
7#8 AW w/armor rod	K
7#6 AW w/armor rod	L
None	Z

Insulation	Code
Porcelain	A
Polymer	B

Pole Class	Species	Code
1	Douglas fir	C
H1	Douglas fir	D
H2	Douglas fir	E
1	Western red cedar	H
H1	Western red cedar	I
H2	Western red cedar	J

© 2007 by PacifiCorp. All rights reserved.

TI 435

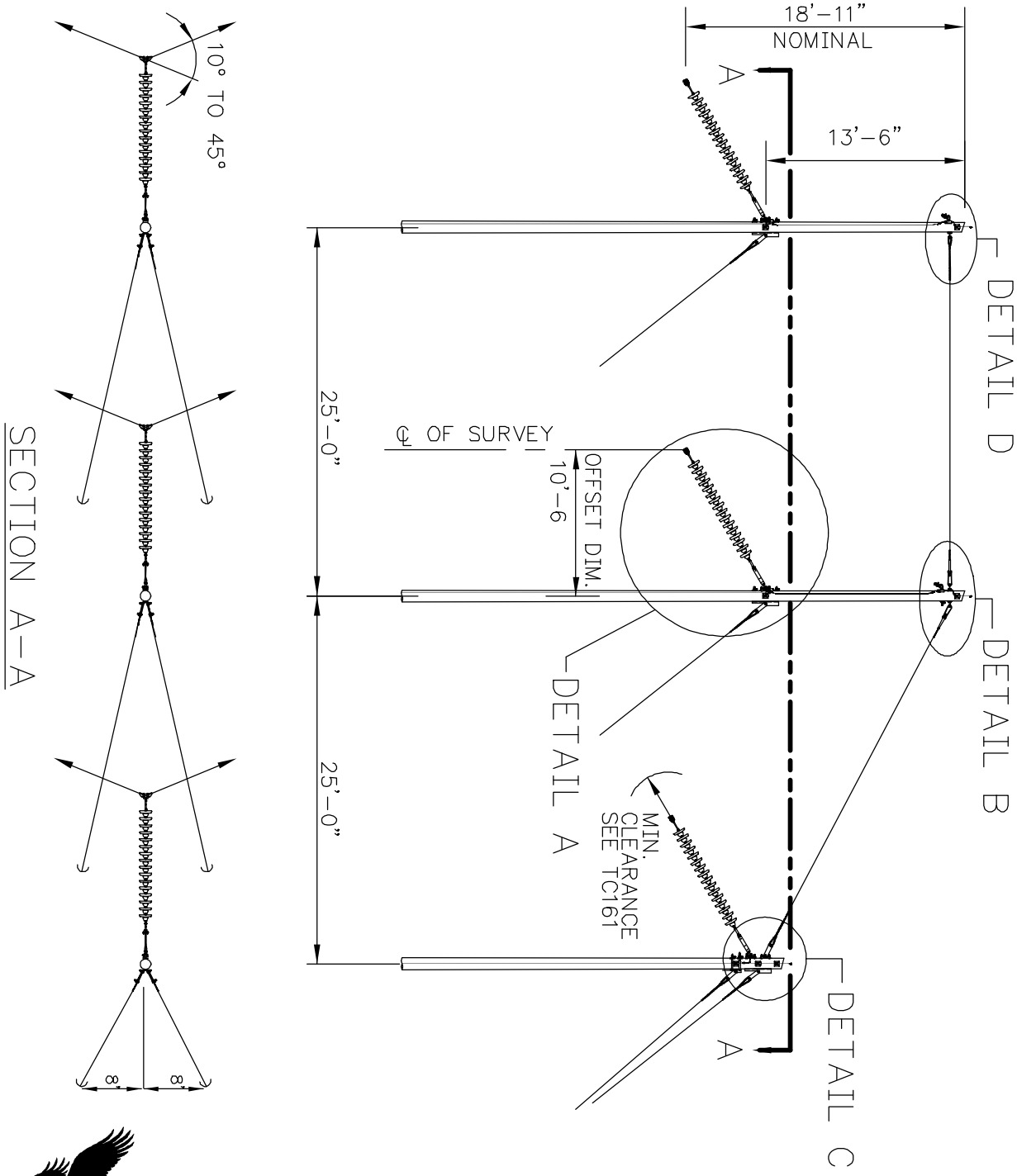

May be used
In raptor areas

PACIFICORP
A MIDAMERICAN ENERGY HOLDINGS COMPANY

TI 435
Page 2 of 4

24 Jul 07

230 kV Structure Shielded, 3-Pole Angle, 30° to 45°

Transmission Construction Standard

© 2007 by PacifiCorp. All rights reserved.

Engineer (C. Wright): CLW
Standards Manager (G. Lyons): GS

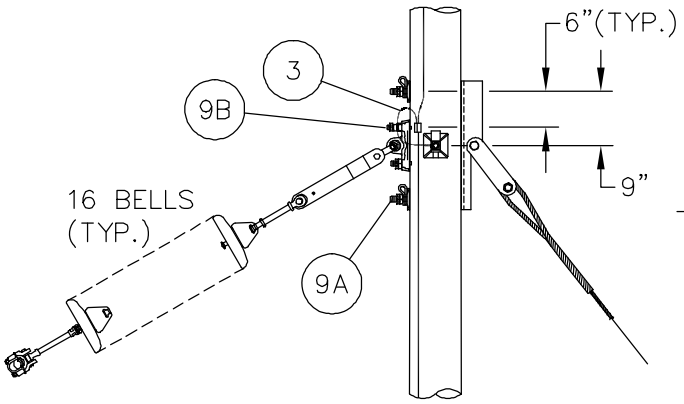

DETAIL A

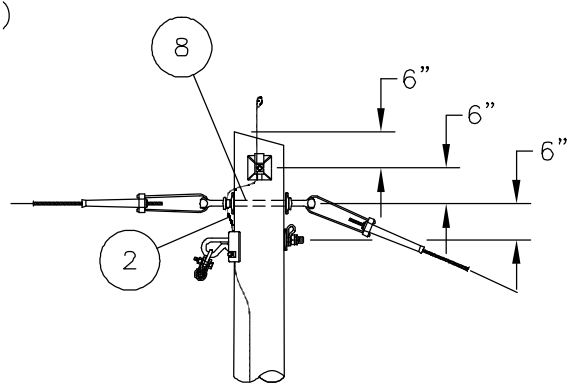

DETAIL B

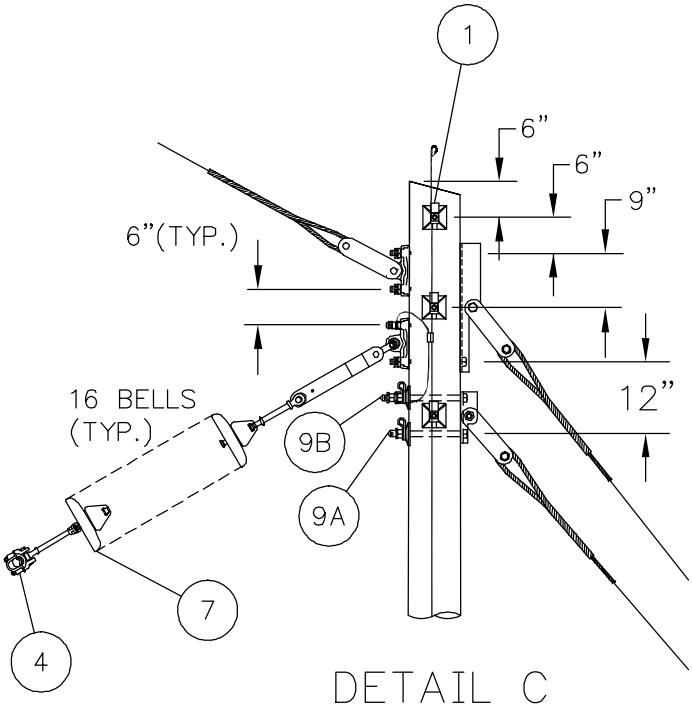

DETAIL C

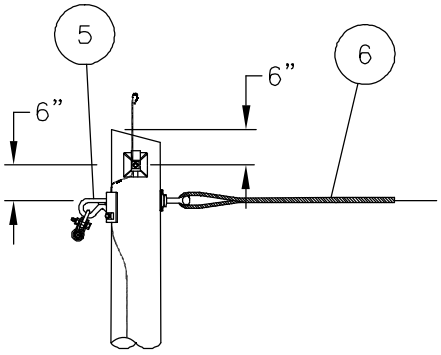

DETAIL D

Transmission Construction Standard	**230 kV Structure Shielded, 3-Pole Angle, 30° to 45°**	PACIFICORP A MIDAMERICAN ENERGY HOLDINGS COMPANY
© 2007 by PacifiCorp. All rights reserved.		24 Jul 07
Engineer (C. Wright): CLW Standards Manager (G. Lyons): GS		**TI 435** Page 3 of 4

Table 1 – Components

Item	Qty.	Standard	Description
1	7	TD 022_	Pole Assembly, Split-Bolt, 3/4″ Diameter
2	6	TD 321C E	Grounding Assembly, Hardware-to-Hardware
3	4	TD 322E	Grounding Assembly, Hardware-to-Structure Ground
4	3	TD 420_ _ E	Suspension Assembly, Conductor
5	2	TD 425_ _ B	Suspension Assembly, Shield Wire
6	1	TD 540_ F B	Tie Wire Assembly
7	3	TD 827E _ A	Insulator Assembly, Suspension, with Link and Y-Clevis-Eye
8	1	TD 921_ D	Bolt Assembly, Double-Arming, 3/4-Inch
9A	5	TD 928_ A	Bolt Assembly, Machine, 1-Inch
9B	9	TD 928_ D	Bolt Assembly, Machine, 1-Inch

Table 2 – Additional Material To Be Specified To Complete This Structure

Item	Qty.	Standard	Description
A	3	TD 020_ _ A	Wood Pole Assembly
B	3	TD 625_ _ _ _	Guy Assembly, 4-Bolt Splayed Channel Pole Attachment
C	1	TD 624_ _ _ _	Guy Assembly, 2-Bolt Splayed Channel Pole Attachment
D	AS REQ	TD 630_ _ _	Anchor Assembly

Notes

1. All hardware is to be bonded when it is separated by less than 8 inches. Bond wire shall loop around the bolt.
2. Install spring washers with loop end up where possible.
3. All pole attachment hardware shall be bonded to the pole grounding assembly.
4. Clearance between the conductor and the structure shall be maintained under reverse wind conditions.
5. Class 1 or better poles are recommended.

© 2007 by PacifiCorp. All rights reserved.

TI 451 _ _ _ _ _

RCMS Code: CU

May be used
In raptor areas

230 kV Structure—Shielded, 3-Pole—Dead-End, 10° to 65°

Scope

This structure is used for deadends with line angles up to 65° when shielding is required.

Line Angle: 10° to 65°

Standard References

TD 001	*Poles—General Information*
TD 100	*Conductor—General Information*
TD 200	*Shield and Guy Wire—General Information*
TD 300	*Grounding—General Information*
TD 500	*Tension Hardware—General Information*
TD 600	*Guys and Anchors—General Information*
TD 700	*Crossarms and Braces—General Information*
TD 800	*Insulators—General Information*
TD 900	*Bolts, Nuts, and Washers—General Information*

Conductor	Code
795 ACSR "Drake"	D
954 ACSR "Cardinal"	E
1272 ACSR "Bittern"	F
795 AAC "Arbutus"	G
1272 AAC "Narcissus"	H
None	Z

Conductor Accessories	Code
Tension Hardware Compression Fittings	
Jumper w/armor rod	C
Jumper w/o armor rod	D
Tension Hardware Bolted Fittings	
Jumper w/armor rod	E
Jumper w/o armor rod	F
None	Z

Shield Wire	Code
3/8 EHS	A
1/2 EHS	B
7#8 AW	C
7#6 AW	D
None	Z

Insulation	Code
Porcelain	A
Polymer	B

Pole Class	Species	Code
3	Douglas fir	A
2	Douglas fir	B
1	Douglas fir	C
H1	Douglas fir	D
H2	Douglas fir	E
3	Western red cedar	F
2	Western red cedar	G
1	Western red cedar	H
H1	Western red cedar	I
H2	Western red cedar	J

© 2004 by PacifiCorp. All rights reserved.

TI 451

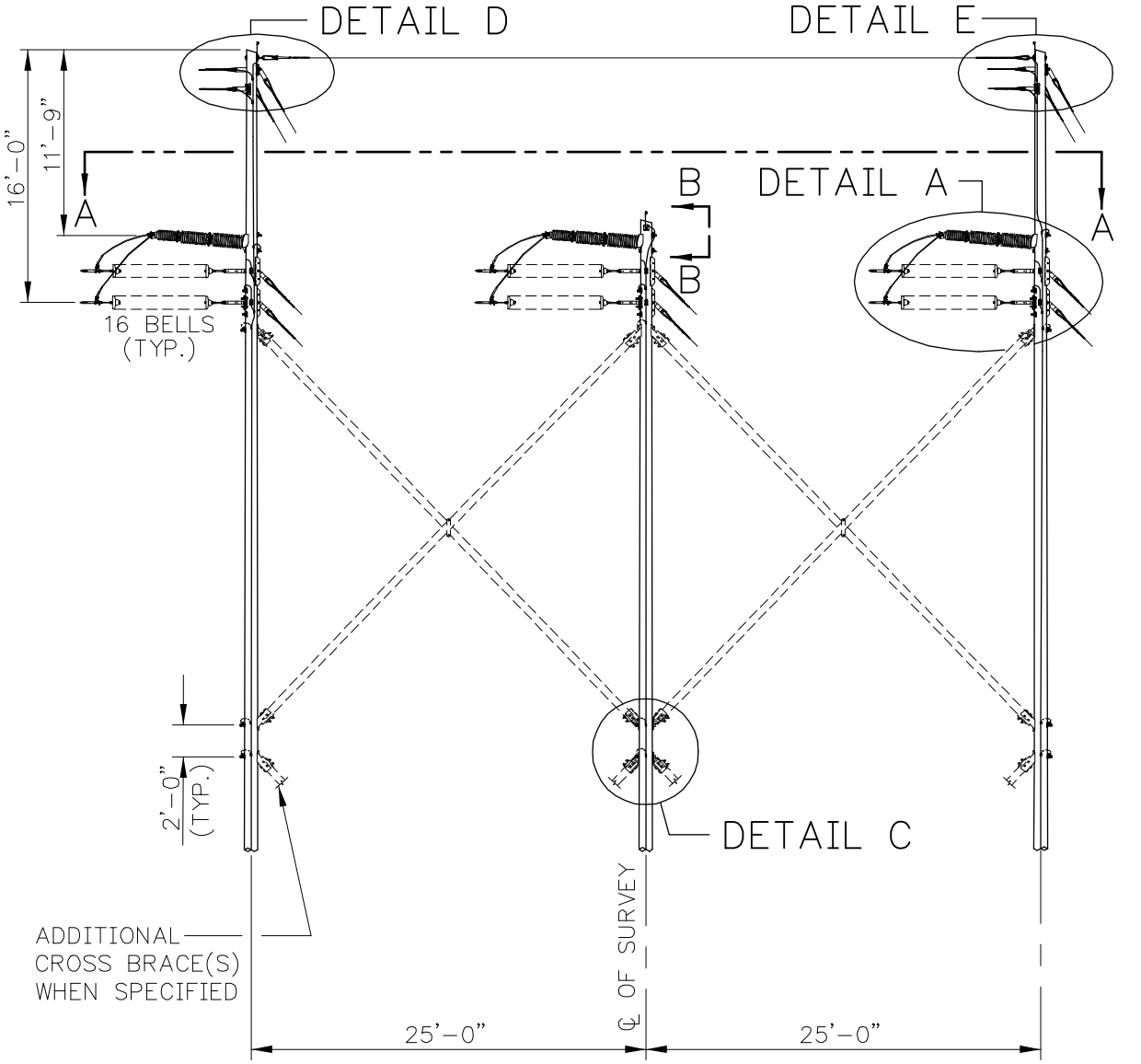

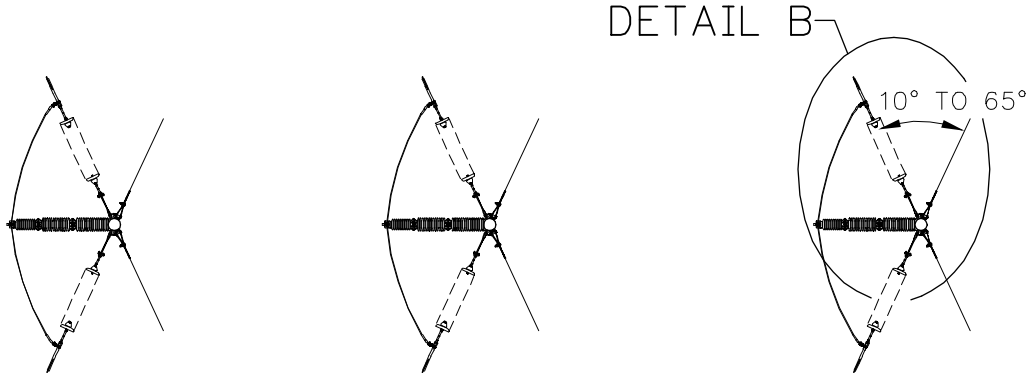

May be used
In raptor areas

SECTION A–A

PACIFICORP		230 kV Structure—Shielded, 3-Pole—Dead-End, 10° to 65°	Transmission Construction Standard
TI 451 Page 2 of 6	28 Apr 04		Engineer (C. Wright): CLW Standards Manager (G. Shaw):

© 2004 by PacifiCorp. All rights reserved.

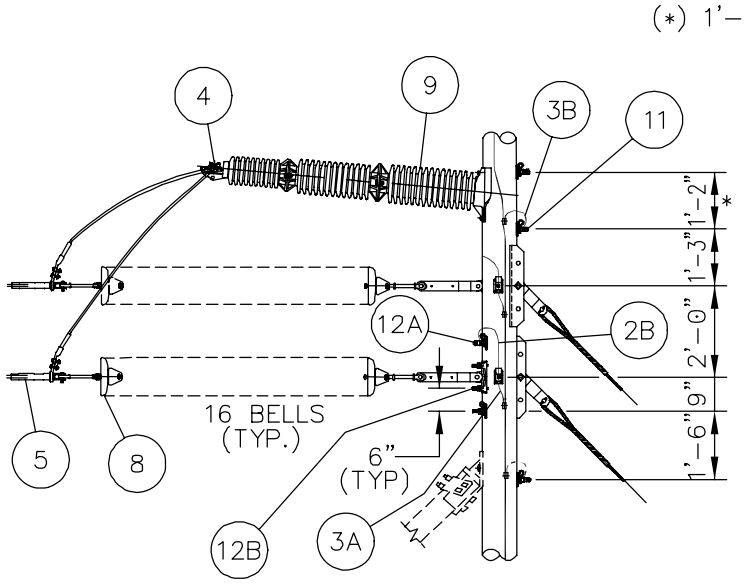

DETAIL A

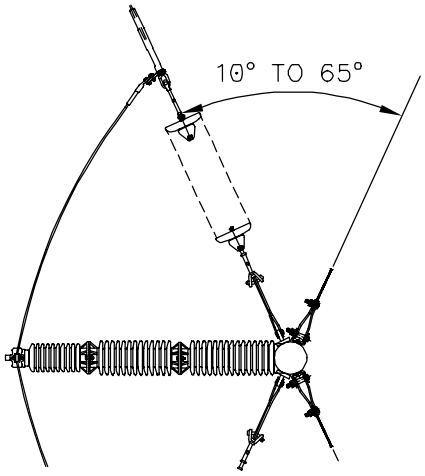

DETAIL B

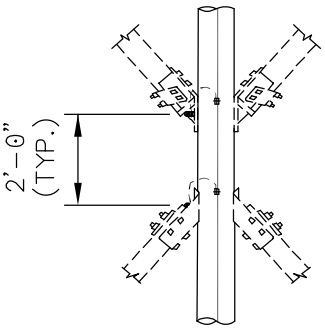

DETAIL C

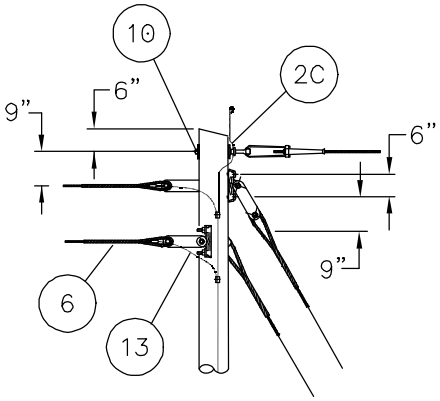

DETAIL D

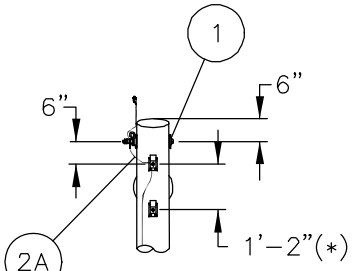

(*) 1'–0" POLYMER INSUL.

SECTION B–B

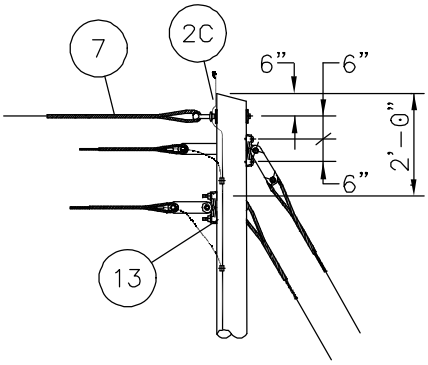

DETAIL E

Transmission Construction Standard

© 2004 by PacifiCorp. All rights reserved.

Engineer (C. Wright): CLW

Standards Manager (G. Shaw):

230 kV Structure—Shielded, 3-Pole—Dead-End, 10° to 65°

PACIFICORP

28 Apr 04

TI 451

Table 1 – Components

Item	Qty.	Standard	Description
1	7	TD 022_	Pole Assembly, Split-Bolt, 3/4″ Diameter
2A	1	TD 321C D	Grounding Assembly, Hardware-to-Hardware
2B	6	TD 321E Z	Grounding Assembly, Hardware-to-Hardware
2C	2	TD 321C Z	Grounding Assembly, Hardware-to-Hardware
3A	6	TD 322C	Grounding Assembly, Hardware-to-Structure Ground
3B	2	TD 322D	Grounding Assembly, Hardware-to-Structure Ground
4	3	TD 420_ _ A	Suspension Assembly, Conductor
5	6	TD 520_ _	Tension Assembly, Conductor
6	4	TD 525_ A	Tension Assembly, Shield Wire, Guy Grip
7	1	TD 540_ E A	Tie Wire Assembly
8	6	TD 826E _ A	Insulator Assembly, Dead-End, with 15″ Link
9	3	TD 831G	Insulator, Post, Horizontal, Polymer
9	3	TD 835F	Insulator, Post, Horizontal, Porcelain
10	2	TD 926_ F	Bolt Assembly, Machine, 3/4-Inch
11	6	TD 927_ A	Bolt Assembly, Machine, 7/8-Inch
12A	12	TD 928_ A	Bolt Assembly, Machine, 1-Inch
12B	20	TD 928_ D	Bolt Assembly, Machine, 1-Inch
13	4	TD 325_	Grounding Assembly, Shield Wire-to-Pole Ground

Table 2 – Additional Material to Be Specified to Complete this Structure

Item	Qty.	Standard	Description
A	3	TD 020_ _ A	Wood Pole Assembly
B	4	TD 622B_ _ _	Guy Assembly, Dead-End Tee Pole Attachment
C	6	TD 623_ _ _ _	Guy Assembly, 4–Bolt Channel Pole Attachment
D	6	TD 627_ _ _ _	Guy Assembly, Bent Link Attachment
E	AS REQ	TD 630_ _ _	Anchor Assembly
F	1	TD 774F_B A _	Brace, Cross, Wood Assembly with Double Bolt Connection

© 2004 by PacifiCorp. All rights reserved.

Notes

1. All hardware is to be bonded when it is separated by less than 8 inches. Bond wire shall loop around the bolt. All pole attachment hardware shall be bonded to the pole grounding assembly.
2. Install spring washers with loop end up where possible.
3. In contaminated areas, use TD 840, code “F” for post insulators.
4. Class 1 or better poles are recommended.

© 2004 by PacifiCorp. All rights reserved.

Engineer (C. Wright): CLW
Standards Manager (G. Shaw):

230 kV Structure—Shielded, 3-Pole—Dead-End, 10° to 65°

PACIFICORP

28 Apr 04

CONCRETE CAISSON SCHEDULE

STR. NO.	STRUCTURE FRAMING TYPE	A.B. CAGE UNIT WEIGHT	TOTAL NO. REQD.	CONCRETE			REINFORCING BARS		
				DIAM. D	LENGTH L	CY/ PIER	TIES (HORIZONTAL)		
							SIZE C	ANCHOR BOLT CIRCLE DIA.	TOTAL
4	TE252	5740 LBS.	1	4.5'	27'	16	#4	45"	26

VERTICAL REINFORCING BARS		
SIZE	REBAR LENGTH	TOTAL
#8	27'	4

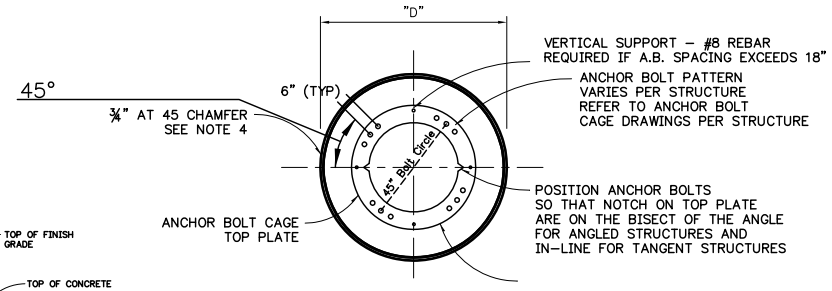

DETAIL 1: Top Plate

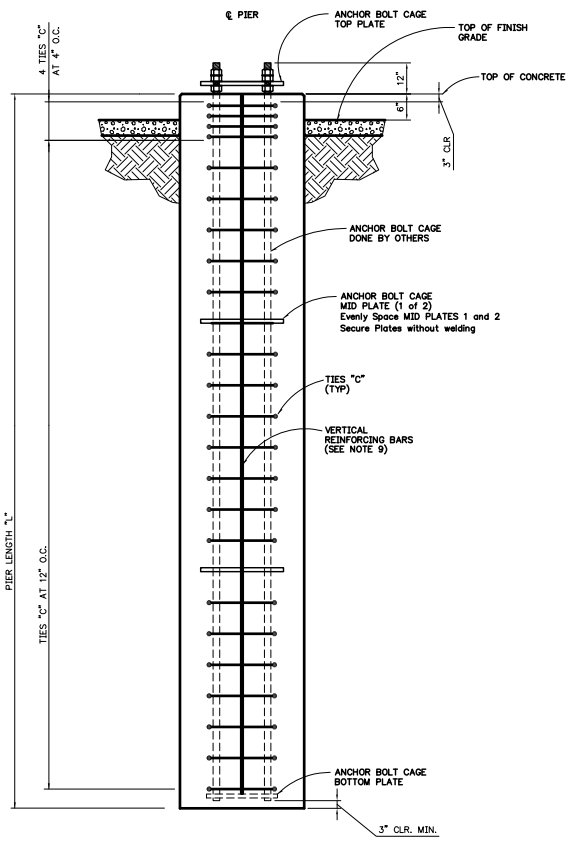

SECTION A–A
TYPICAL DRILLED PIER

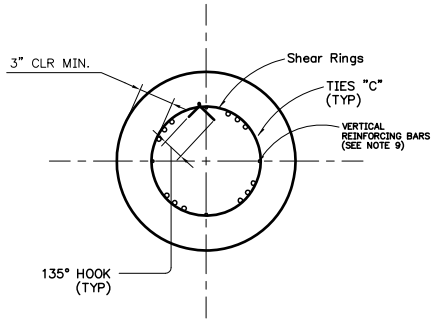

Detail 2: Rebar Reinforcement

NOTES

1. ALL CONCRETE SHALL HAVE A MINIMUM STRENGTH OF 3,500 PSI AT 28 DAYS WITH 6% ENTRAINED AIR.
2. ALL REINFORCING STEEL SHALL BE DEFORMED INTERMEDIATE GRADE NEW BILLET STEEL CONFORMING TO ASTM A615 GRADE 60.
3. TIE WIRE SHALL BE #18 GAUGE MINIMUM.
4. BEVEL ALL EXPOSED PROJECTING CORNERS OF CONCRETE WORK ¾" X ¾" UNLESS INDICATED OTHERWISE.
5. MINIMUM REINFORCING COVER SHALL BE AS FOLLOWS, UNLESS NOTED OTHERWISE:
   CONCRETE CAST AGAINST EARTH.....3"
   ALL OTHER SURFACES.....2"
6. HORIZONTAL TOLERANCE FOR ANCHOR BOLT LOCATION TO BE +/– ⅛".
7. SEE CONCRETE SPECIFICATIONS FOR DETAILED CONCRETE REQUIREMENTS.
8. ANCHOR BOLT CAGE AND STRUCTURES SUPPLIED BY SABRE TUBULAR STRUCTURES. CONTACT PERSON IS KEN TAYLOR. P.O. #4500389776
   PHONE: (817) 852–1840
9. NOTCH MIDDLE TEMPLATES TO ACCOMODATE VERTICAL REINFORCING BARS.

PROJ/ERP# 02920003	Woods Cross–Holly Oil 46kV TRANSMISSION LINE CONCRETE CAISSON SCHEDULE
PL#	
DATE 2/15/2008	
ENG ASL / DES	
DR / CH	
APPROVAL	PACIFICORP TRANSMISSION
	SCALE: N.T.S. / SHEET 1 OF 1 / REV. 0

CAD NO: CAISSON SCH. ATTOFD WRT/MASTERNONE PLOT SCALE:

No.	DATE	REVISION	BY	CHK	APP	No.	DATE	REVISION	BY	CHK	APP	DRAWING No.	REFERENCE DRAWINGS	DRAWING No.	REFERENCE DRAWINGS

BORDER REVISED 06-27-02 R.J.R.

DRILLING PROGNOSIS

Well:	**Riley Ridge #24-16**	**AFE No.:**	
Location:	SE SW Sec 16 - T29N - R114W	**Property No.:**	
County, State	Sublette Co., Wyoming	**Field:**	Madison
Surface Location:	371' FSL & 2971 FEL	**Objective:**	Nugget
Target Location:	Same	**TVD/MD:**	11460
E-Mail:		**Cementing:**	
Wellhead:		**Mud:**	
Spool:		**Rig:**	
Xmas Tree		**Offset Wells:**	
Tubing:			

Superintendent: Larry Seigrist
Engineer: Eddie Wright

Hole Size	Formation Tops	Logs	Cement	Mud Weight
17-1/2"	xx" Conductor BTW xxx' 13-3/8" @ 886'		Cemented with 975 sacks of cement and circulated to surface	
8-3/4"	**11,100' 2-7/8" 8.7# I-80 BTS-6 internally coated** TOC Estimated @ 6000' 7,005 Frontier - 1 7,496 Frontier - 2 7,762 Frontier - 3 8,088 Frontier - 4 8,262 Frontier - 5 8,460 Bear River 8,879 Duddy **DV Tool 9,000'** 9,035 Dakota 9,425 Beckwith 10,240 Stump 10,272 Pruess 10,443 Twin Creek 11,100' Production Packer 11,220 Gypsum Spring 11,310 Nugget 11,310-11,350' Potential perfs for injection 12,000' 5-1/2" 17# T-95 LTC		**Lead:** 290/330 sks (Stage 1/2) Premium Lite II Plus + 0.2% Retarder + 0.2% Fluid Loss + 0.25% Dispersant + 0.04 Static Free + 0.01 gps Foam Preventer, 11.5 ppg (20%), Yield 2.65 cuft/sk, Water 15.74 gal/sk, , TOC: 9,000'/6,000' **Tail:** 120/ 50/50 sk Class G + 0.3% Fluid Loss + 0.25% Retarder + 0.2% Dispersant + 20% Silica Sand + 0.04% Static Free + 0.01 gps Foam Preventer, 15.8 ppg (20%), Yield 1.36 cuft/sk, Water 5.64 gal/sk TOC 11,680' / 8,870'	Low Solids Non-Dispersed to Lightly Dispersed 8.4 - 9.5 ppg

Riley Ridge #20-14
Produced Waste Gas Injection Well

Maximum Pressure Calculations

Well: **Riley Ridge 20-14**
County, State Sublette Co., WY
Surface Location: 836' FSL & 2442' FEL Sec 17 T29N R114W
Wellhead: 16" 5M SOWx 16-3/4" 5M x 13-5/8" 5M x 11"5M
Tubing Head: 5-1/8" 5M side valves
Xmas Tree 11" 5M with 5-1/8" 5M bore & side valves

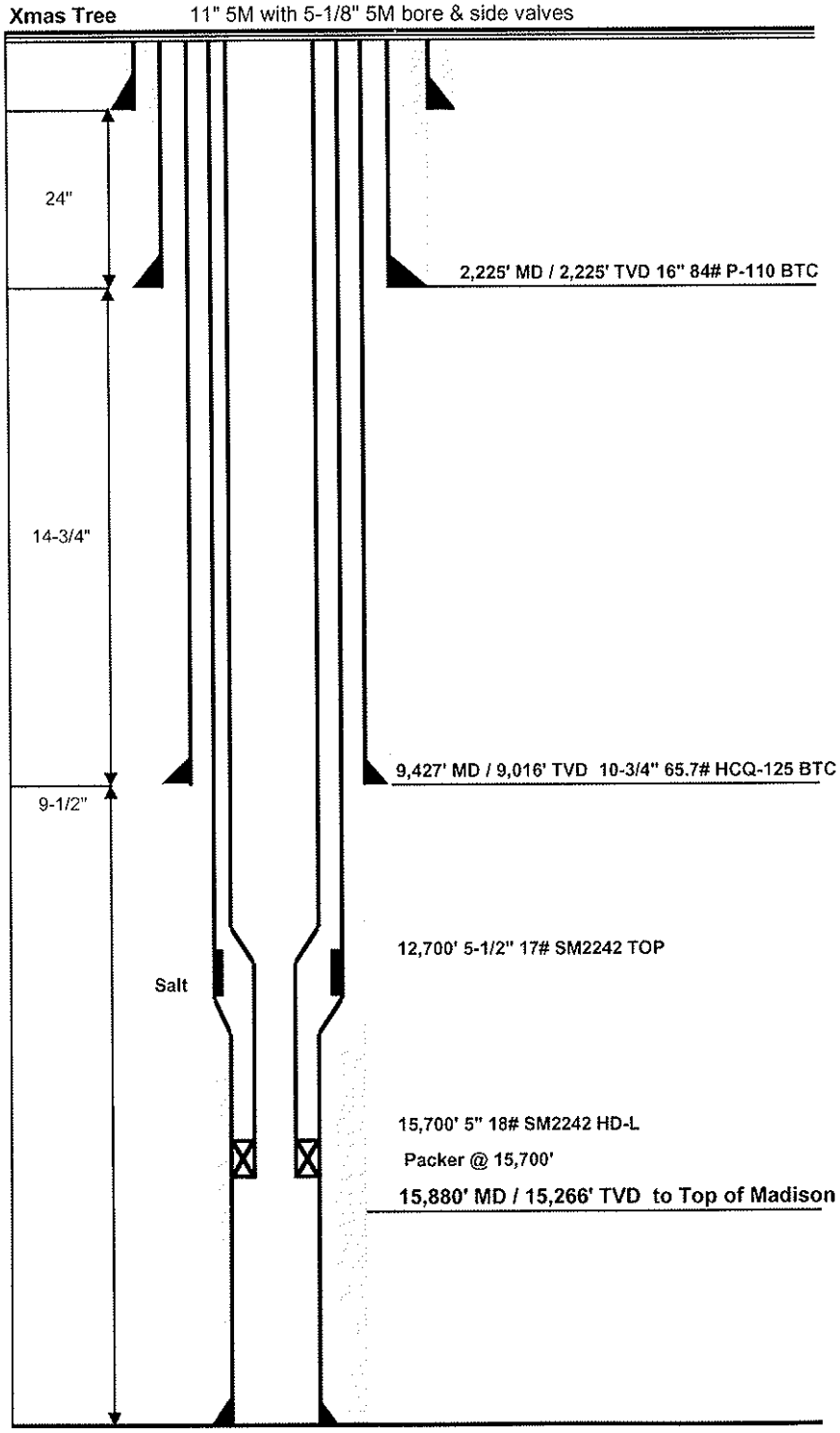

Assumptions:
Surface Injection Temperature (max) = 90 Deg F
Design Maximum Surface Pressure = 3500 psi

Injection Fluid Gradient
Based on Peng Robinson EOS - 0.423 psi/ft

Maximum Bottomhole Pressure at 3500 psi (surface)
Pbh = Psur + P Head
Phead = 0.423 psi/ft X 15266 = 6458 psi
Pbh = 3500 psi + 6458 psi = 9958 psi
Implied Gradient = 9958/15226 = 0.65 psi/ft

Estimated Frac Pressure at Top of Madison
Based on 0.85 psi/ft Fracture Gradient
= 0.85 X 15226' = 12942 psi

Therefore, max surface injection pressure of 3500 ps
is 2984 psi <u>less</u> than fracture pressure

Cause _____
Docket _____

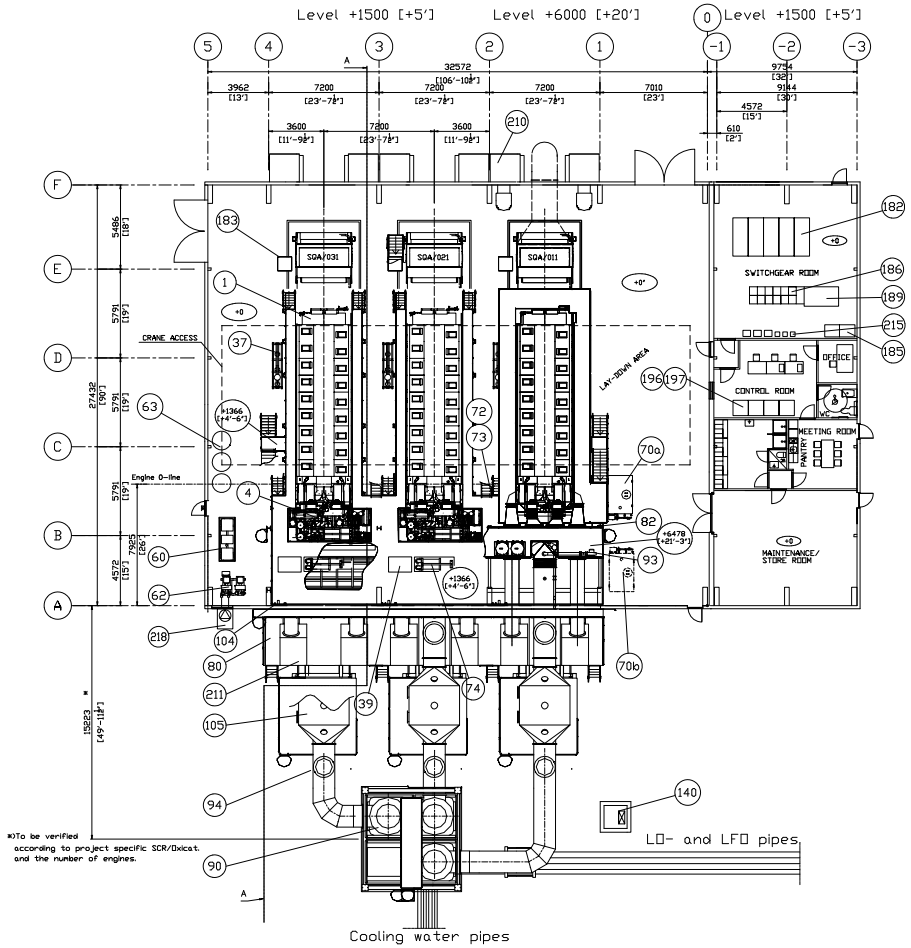

ENGINE HALL & UTILITY BLOCK

Item No	Pcs.	Code (First)	DESCRIPTION	WEIGHT/lb Incl. liquids kg	lb	MOUNTING LEVEL millim.	(Floor level) inch.
1	3	SQA	Engine generator set	363 ton	800 ton	+0.000	0'- 0"
4	3	QEA	Pipe module		-	+0.000	0'- 0"
37	3	ZBB	Gas regulating unit		-	+0.000	0'- 0"
39	3		Additional preheater (optional)		-	+0.000	0'- 0"
60	1	TCA	Working air unit		-	+0.000	0'- 0"
62	1	TSA	Starting air unit		-	+0.000	0'- 0"
63	3	TSB	Starting air bottle 3000l/793 gal		-	+0.000	0'- 0"
70a	1	VBA	Maintenance water tank 5m3/1321gal		-	+0.000	0'- 0"
70b	1	VBA	Glycol tank 5m3/1321gal (optional)		-	+0.000	0'- 0"
72	3	VEA	LT-water expansion vessel 600l/159gal		-	+6.250	20'-6"
73	3	VEA	HT-water expansion vessel 600l/159gal	glycol (optional)		+6.250	20'-6"
74	3	VGB	Central cooler (optional)		-	+550	1-10"
80	6	NGA	Charge air filter		-	+915	3'-0"
82	3		Charge air & Exhaust gas module				
93	3	NHA	Exhaust gas ventilation unit		-	+6.250	20'-6"
104	3	YCA	Urea dosing unit (optional)		-		-
182	-	BAC	MV Switchgear		-	+0.000	0'- 0"
183	3	BAN	Neutral point cubicle		-	+0.000	0'- 0"
185	2	BEY	DC-Unit		-	+0.000	0'- 0"
186	-	BFA	LV switchboard		-	+0.000	0'- 0"
189	1	BFB	Station transformer		-	+0.000	0'- 0"
196	1	CFA	Control panel, common		-	+0.000	0'- 0"
197	3	CFC	Control panel, engine wise		-	+0.000	0'- 0"
210	6		Ventilation unit (enginehall)		-	+0.000	0'- 0"
211	3		Ventilation unit (aux. area)		-	+1.470	4'- 10"
215	6		Frequency converter		-	+0.000	0'- 0"
218	1		Ventilation unit for compressor		-	+0.000	0'- 0"

MECHANICAL UTILITY AREA

Item No	Pcs.	Code (First)	DESCRIPTION	WEIGHT/kg Incl. liquids kg	lb	MOUNTING LEVEL millim.	(Floor level) inch.
71	15	VCA	Radiator		-	-	-
90	3	NHA	Exhaust gas silencer		-	+4.470	14'-8"
94	6	NGA	Rupture disc		-	-	-
105	3		SCR/OXI-CAT (Optional)		-	+3.962	13'-0"
106	1		SCR gas analyzer (Optional)		-	+0.000	0'-0"
140	1	DAA	Oily water collecting pit		-	-	-

FOR TENDERING ONLY

WÄRTSILÄ

© Wärtsilä Finland Oy
Power Plants

MASTER LAYOUT, PLAN
ENGINE HALL
18V50DF GAS POWER PLANT
3x18V50DF

Product 18V50DF | ACA | UNITS mm [in]

Proj. no.

MADE	15.9.2003	MMy/Myllymäki	ASLT.DRG			
CHKD	15.9.2003	KVA/Viita-aho	SCALE 1:150	SIZE A1	Page No. 1/1	DRG. No. WDAAA294490 a Rev.
APPD	29.9.2003	MiJi/Juopperi				

This drawing is the property of Wärtsilä NSD Corp. and shall neither be copied, shown nor communicated to a third party without the consent of the owner.

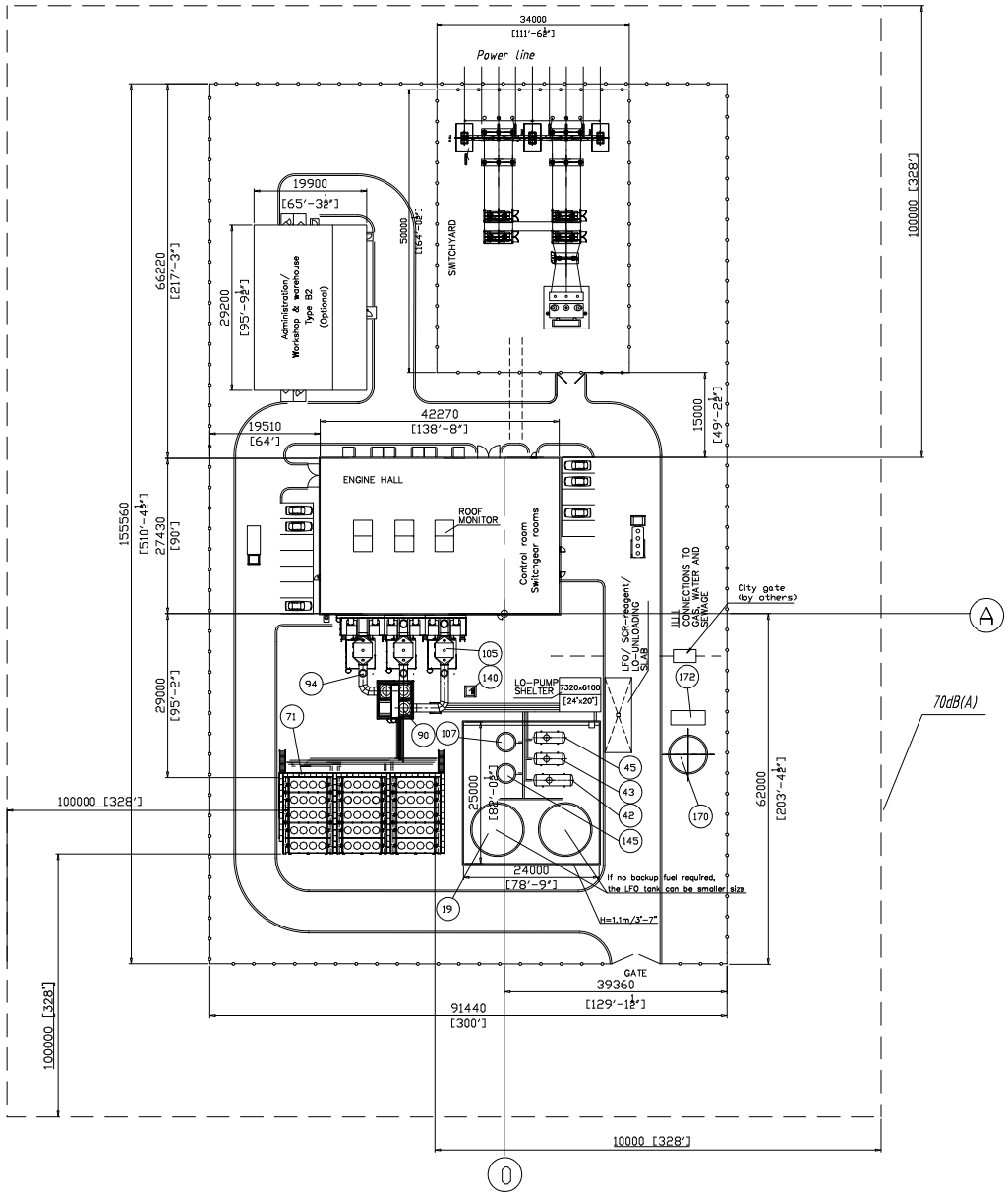

MECHANICAL UTILITY AREA

Item No	Pcs.	Code (First)	DESCRIPTION	WEIGHT Incl. liquids kg	lb	MOUNTING LEVEL millim.	(Floor level) inch.
71	15	VCA	Radiator		-	-	-
90	3	NHA	Exhaust gas silencer		-	4470	14'-8"
94	6	NGA	Rupture disc		-	-	-
105	3		SCR/OXI-CAT (Optional)		-	3962	13'-0"
106	1		SCR gas analyzer (Optional)		-	0	0'-0"
140	1	DAA	Oily water collecting pit/separator		-	-	-
170	1	VFB	Fire / raw water tank		-	-	-
172	1		Fire fighting container		-	-	-

DAY / STORAGE TANK / UNLOADING AREA

Item No	Pcs.	Code (First)	DESCRIPTION	WEIGHT Incl. liquids kg	lb	MOUNTING LEVEL millim.	(Floor level) inch.
19	2	PAE	LFO storage tank 500m3/132085gal		-		-
42	1	QAC	Clean LO tank 20m3/5284gal		-		-
43	1	QAD	Used LO tank 16m3/4227gal		-		-
45	1	QAM	Lube oil service tank 16m3/4227gal		-		-
107	1		SCR reagent tank 35m3/9246gal (optional)		-		-
145	1	DDB	Sludge tank 35m3/9246gal (optional)		-		-

FOR TENDERING ONLY

WÄRTSILÄ

© Wärtsilä Finland Oy
Power Plants

MASTER LAYOUT, SITE
POWER PLANT
18V50DF GAS POWER PLANT
3x18V50DF

Product 18V50DF | ACA | UNITS mm [in] | Proj. no.

MADE	15.9.2003	MMy/Myllymäki	ASLT.DRG			
CHKD	15.9.2003	KVA/Viita-aho	SCALE 1:400	SIZE A1	Page No. 1/1	DRG. No. WDAAA294491 a Rev.
APPD	29.9.2003	MJi/Juopperi				

This drawing is the property of Wärtsilä and shall neither be copied, shown nor communicated to a third party without the consent of the owner.