FINAL
Environmental Assessment for the Rands Butte Gas Development Project

Volume 3
Appendices

May 2010

The BLM manages more land – 253 million acres – than any other Federal agency. This land, known as the National System of Public Lands, is primarily located in 12 Western States, including Alaska. The Bureau, with a budget of about $1 billion, also administers 700 million acres of sub-surface mineral estate throughout the nation. The BLM's multiple-use mission is to sustain the health and productivity of the public lands for the use and enjoyment of present and future generations. The Bureau accomplishes this by managing such activities as outdoor recreation, livestock grazing, mineral development, and energy production, and by conserving natural, historical, cultural, and other resources on public lands.

BLM/WY/PL-10/018+1310

WY-100-EA09-43

Appendix A
Helium Resource Report

Helium Resource Significance Overview Points: Cimarex, Inc., Rands Butte Project EA, Riley Ridge Area, Wyoming

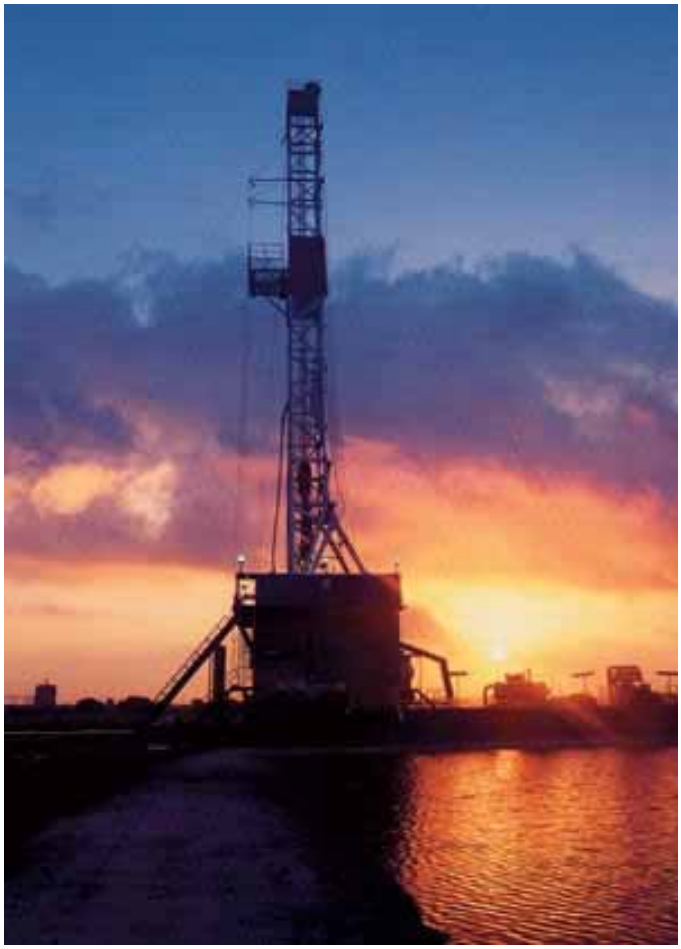

Karl S. Osvald

U.S. Department of Interior, Bureau of Land Management
Wyoming Reservoir Management Group

8 April 2010

Phone: 307-261-7729

e-mail: Karl_Osvald@blm.gov

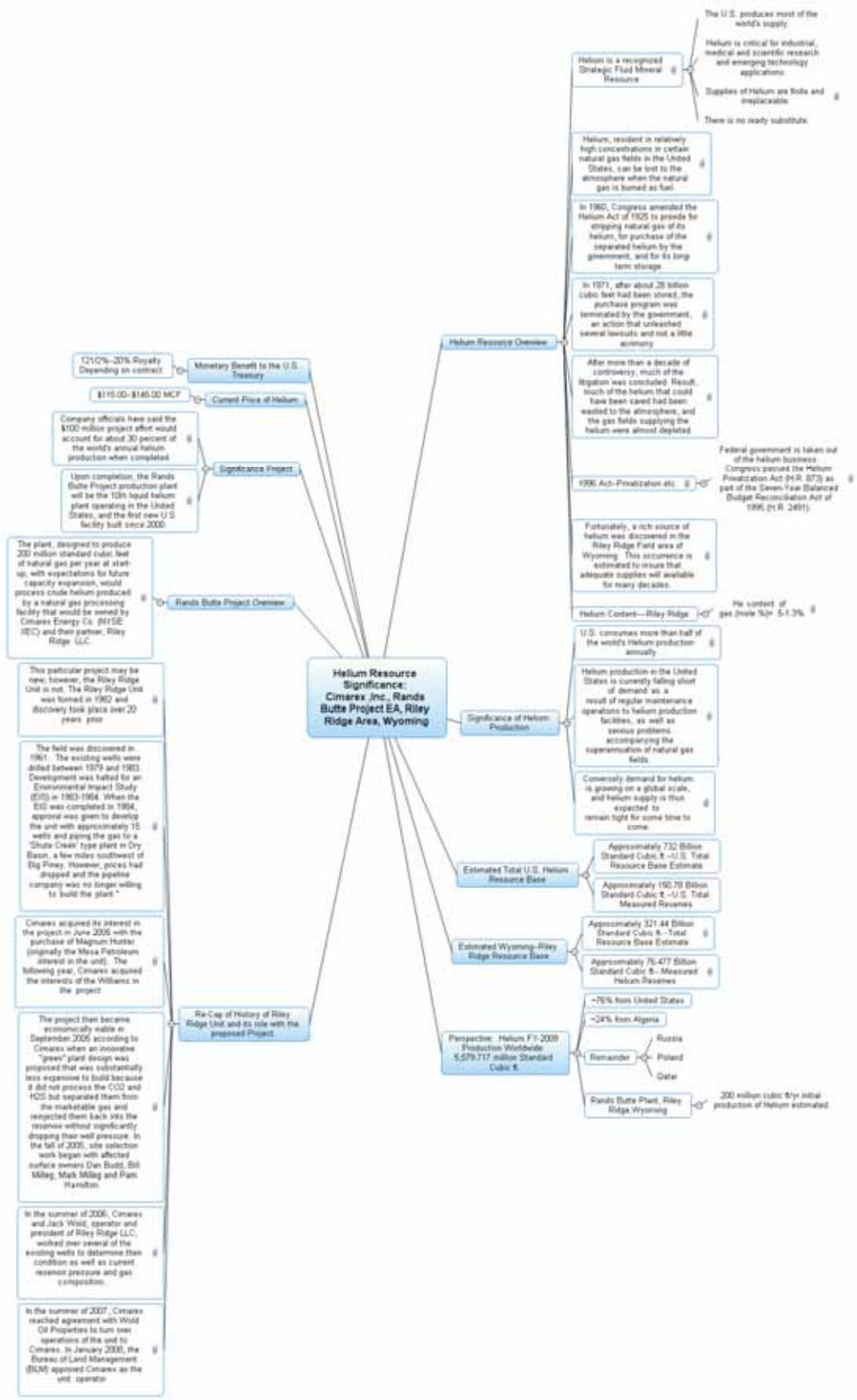
Helium Resource Significance: Cimarex ,Inc., Rands Butte Project EA, Riley Ridge Area, Wyoming
Helium Resource Overview
Helium is a recognized Strategic Fluid Mineral Resource
The U.S. produces most of the world's supply.
Helium is critical for industrial, medical and scientific research and emerging technology applications.
Supplies of Helium are finite and irreplaceable.
There is no ready substitute.
Helium, resident in relatively high concentrations in certain natural gas fields in the United States, can be lost to the atmosphere when the natural gas is burned as fuel.
In 1960, Congress amended the Helium Act of 1925 to provide for stripping natural gas of its helium, for purchase of the separated helium by the government, and for its long term storage.
In 1971, after about 28 billion cubic feet had been stored, the purchase program was terminated by the government, an action that unleashed several lawsuits and not a little acrimony.
After more than a decade of controversy, much of the litigation was concluded. Result, much of the helium that could have been saved had been wasted to the atmosphere, and the gas fields supplying the helium were almost depleted.
1996 Act--Privatization etc.
Federal government is taken out of the helium business. Congress passed the Helium Privatization Act (H.R. 873) as part of the Seven-Year Balanced Budget Reconciliation Act of 1996 (H.R. 2491).
Fortunately, a rich source of helium was discovered in the Riley Ridge Field area of Wyoming. This occurrence is estimated to insure that adequate supplies will available for many decades.
Helium Content—Riley Ridge
He content of gas (mole %)= 5-1.3%
Significance of Helium Production
U.S. consumes more than half of the world's Helium production annually.
Helium production in the United States is currently falling short of demand as a result of regular maintenance operations to helium production facilities, as well as serious problems accompanying the supersimulation of natural gas fields.
Conversely demand for helium is growing on a global scale, and helium supply is thus expected to remain tight for some time to come.
Estimated Total U.S. Helium Resource Base
Approximately 732 Billion Standard Cubic ft.--U.S. Total Resource Base Estimate
Approximately 150.78 Billion Standard Cubic ft.--U.S. Total Measured Reserves
Estimated Wyoming--Riley Ridge Resource Base
Approximately 321.44 Billion Standard Cubic ft.--Total Resource Base Estimate
Approximately 76.477 Billion Standard Cubic ft.--Measured Helium Reserves
Perspective: Helium FY-2009 Production Worldwide 5,579,717 million Standard Cubic ft.
~76% from United States
~24% from Algeria
Remainder
Russia
Poland
Qatar
Rands Butte Plant, Riley Ridge Wyoming
200 million cubic ft/yr initial production of Helium estimated
Monetary Benefit to the U.S. Treasury
12½%--20% Royalty Depending on contract
Current Price of Helium
$115.00--$145.00 MCF
Significance Project
Company officials have said the $100 million project effort would account for about 30 percent of the world's annual helium production when completed.
Upon completion, the Rands Butte Project production plant will be the 10th liquid helium plant operating in the United States, and the first new U.S. facility built since 2000.
Rands Butte Project Overview
The plant, designed to produce 200 million standard cubic feet of natural gas per year at start-up, with expectations for future capacity expansion, would process crude helium produced by a natural gas processing facility that would be owned by Cimarex Energy Co. (NYSE: XEC) and their partner, Riley Ridge LLC.
Re-Cap of History of Riley Ridge Unit and its role with the proposed Project
This particular project may be new; however, the Riley Ridge Unit is not. The Riley Ridge Unit was formed in 1982 and discovery took place over 20 years prior.
The field was discovered in 1961. The existing wells were drilled between 1979 and 1983. Development was halted for an Environmental Impact Study (EIS) in 1983-1984. When the EIS was completed in 1984, approval was given to develop the unit with approximately 15 wells and piping the gas to a "Shute Creek" type plant in Dry Basin, a few miles southwest of Big Piney. However, prices had dropped and the pipeline company was no longer willing to build the plant."
Cimarex acquired its interest in the project in June 2006 with the purchase of Magnum Hunter (originally the Mesa Petroleum interest in the unit). The following year, Cimarex acquired the interests of the Williams in the project.
The project then became economically viable in September 2006 according to Cimarex when an innovative "green" plant design was proposed that was substantially less expensive to build because it did not process the CO2 and H2S but separated them from the marketable gas and reinjected them back into the reservoir without significantly dropping their well pressure. In the fall of 2006, site selection work began with affected surface owners Dan Budd, Bill Millag, Mark Millag and Pam Hamilton.
In the summer of 2006, Cimarex and Jack Wold, operator and president of Riley Ridge LLC, worked over several of the existing wells to determine their condition as well as current reservoir pressure and gas composition.
In the summer of 2007, Cimarex reached agreement with Wold Oil Properties to turn over operations of the unit to Cimarex. In January 2008, the Bureau of Land Management (BLM) approved Cimarex as the unit operator.

TABLE OF CONTENTS

Page

1.0 HELIUM RESOURCE OVERVIEW POINTS 1
1.1 Helium is a recognized Strategic Fluid Mineral Resource 1
1.2 Helium, resident in relatively high concentrations in certain natural gas fields in the United States, can be lost to the atmosphere when the natural gas is burned as fuel. 1
1.3 In 1960, Congress amended the Helium Act of 1925 to provide for stripping natural gas of its helium, for purchase of the separated helium by the government, and for its long-term storage. 1
1.4 In 1971, after about 28 billion cubic feet had been stored, the purchase program was terminated by the government, an action that unleashed several lawsuits and not a little acrimony 1
1.5 After more than a decade of controversy, much of the litigation was concluded. Result, much of the helium that could have been saved had been wasted to the atmosphere, and the gas fields supplying the helium were almost depleted. 2
1.6 1996 Act--Privatization etc. 2
1.7 Fortunately, a rich source of helium was discovered in the Riley Ridge Field area of Wyoming. This occurrence is estimated to insure that adequate supplies will available for many decades. 2
1.8 Helium Content----Riley Ridge 2
2.0 SIGNIFICANCE OF HELIUM PRODUCTION 3
2.1 U.S. consumes more than half of the world's Helium production annually. 3
2.2 Helium production in the United States is currently falling short of demand as a result of regular maintenance operations to helium production facilities, as well as serious problems accompanying the superannuation of natural gas fields. 3
2.3 Conversely demand for helium is growing on a global scale, and helium supply is thus expected to remain tight for some time to come. 3
3.0 ESTIMATED TOTAL U.S. HELIUM RESOURCE BASE 4
3.1 Approximately 732 Billion Standard Cubic ft.--U.S. Total Resource Base Estimate 4
3.2 Approximately 150.78 Billion Standard Cubic ft.--U.S. Total Measured Reserves 4
4.0 ESTIMATED WYOMING--RILEY RIDGE RESOURCE BASE 5
4.1 Approximately 321.44 Billion Standard Cubic ft.--Total Resource Base Estimate 5
4.2 Approximately 76.477 Billion Standard Cubic ft--.Measured Helium Reserves 5
5.0 PERSPECTIVE: HELIUM FY-2009 PRODUCTION WORLDWIDE: 5,579.717 MILLION STANDARD CUBIC FT. 6
5.1 ~76% from United States 6
5.2 ~24% from Algeria 6
5.3 Remainder 6
5.4 Rands Butte Plant, Riley Ridge, Wyoming 6

6.0 RE-CAP OF HISTORY OF RILEY RIDGE UNIT AND ITS ROLE WITH THE PROPOSED PROJECT. 7
6.1 This particular project may be new; however, the Riley Ridge Unit is not. The Riley Ridge Unit was formed in 1982 and discovery took place over 20 years prior. 7
6.2 The field was discovered in 1961. The existing wells were drilled between 1979 and 1983. Development was halted for an Environmental Impact Study (EIS) in 1983-1984. When the EIS was completed in 1984, approval was given to develop the unit with approximately 15 wells and piping the gas to a 'Shute Creek' type plant in Dry Basin, a few miles southwest of Big Piney. However, prices had dropped and the pipeline company was no longer willing to build the plant." 7
6.3 Cimarex acquired its interest in the project in June 2005 with the purchase of Magnum Hunter (originally the Mesa Petroleum interest in the unit). The following year, Cimarex acquired the interests of the Williams in the project. 7
6.4 The project then became economically viable in September 2005 according to Cimarex when an innovative "green" plant design was proposed that was substantially less expensive to build because it did not process the CO2 and H2S but separated them from the marketable gas and reinjected them back into the reservoir without significantly dropping their well pressure. In the fall of 2005, site selection work began with affected surface owners Dan Budd, Bill Milleg, Mark Milleg and Pam Hamilton. 7
6.5 In the summer of 2006, Cimarex and Jack Wold, operator and president of Riley Ridge LLC, worked over several of the existing wells to determine their condition as well as current reservoir pressure and gas composition..... 8
6.6 In the summer of 2007, Cimarex reached agreement with Wold Oil Properties to turn over operations of the unit to Cimarex. In January 2008, the Bureau of Land Management (BLM) approved Cimarex as the unit operator. 8
7.0 RANDS BUTTE PROJECT OVERVIEW 9
7.1 The plant, designed to produce 200 million standard cubic feet of natural gas per year at start-up, with expectations for future capacity expansion, would process crude helium produced by a natural gas processing facility that would be owned by Cimarex Energy Co. (NYSE: XEC) and their partner, Riley Ridge LLC. 9
8.0 SIGNIFICANCE PROJECT 10
8.1 Company officials have said the $100 million project effort would account for about 30 percent of the world's annual helium production when completed. 10
8.2 Upon completion, the Rands Butte Project production plant will be the 10th liquid helium plant operating in the United States, and the first new U.S. facility built since 2000. 10
9.0 CURRENT PRICE OF HELIUM 11
9.1 $115.00--$145.00 MCF 11
10.0 MONETARY BENEFIT TO THE U.S. TREASURY 12
10.1 121/2%--20% Royalty Depending on contract. 12

LIST OF APPENDICES

Appendix

A. Background Paper in Support of the American Physical Society's Statement on Conservation of helium

B. CRS Report to Congress on Helium Divestment. October 9, 1996.: Abstracted Portion

1.0HELIUM RESOURCE OVERVIEW POINTS

1.1 HELIUM IS A RECOGNIZED STRATEGIC FLUID MINERAL RESOURCE

RE: http://minerals.usgs.gov/minerals/pubs/commodity/helium/myb1-2008-heliu.pdf, October 2009. Accessed: 04/08/10

A. The U.S. produces most of the world's supply.

B. Helium is critical for industrial, medical and scientific research and emerging technology applications.

C. Supplies of Helium are finite and irreplaceable.

See information resource at end of paper: "Background Paper in Support of the American Physical Society's Statement on Conservation of Helium", Gordon Dunn, University of Colorado; Edward Gerjuoy, University of Pittsburgh; Robert L. Park, University of Maryland

RE: http://www.aps.org/policy/reports/popa-reports/helium.cfm, 2010, Accessed: 04/08/10

D. There is no ready substitute.

1.2 HELIUM, RESIDENT IN RELATIVELY HIGH CONCENTRATIONS IN CERTAIN NATURAL GAS FIELDS IN THE UNITED STATES, CAN BE LOST TO THE ATMOSPHERE WHEN THE NATURAL GAS IS BURNED AS FUEL.

RE: http://scienceonline.org/cgi/content/abstract/223/4638/789, Science, 24 February 1984, Accessed: 04/08/10

1.3 IN 1960, CONGRESS AMENDED THE HELIUM ACT OF 1925 TO PROVIDE FOR STRIPPING NATURAL GAS OF ITS HELIUM, FOR PURCHASE OF THE SEPARATED HELIUM BY THE GOVERNMENT, AND FOR ITS LONG-TERM STORAGE.

RE: http://scienceonline.org/cgi/content/abstract/223/4638/789, Science, 24 February 1984, Accessed: 04/08/10

1.4 IN 1971, AFTER ABOUT 28 BILLION CUBIC FEET HAD BEEN STORED, THE PURCHASE PROGRAM WAS TERMINATED BY THE GOVERNMENT, AN ACTION THAT UNLEASHED SEVERAL LAWSUITS AND NOT A LITTLE ACRIMONY

RE: http://scienceonline.org/cgi/content/abstract/223/4638/789, Science, 24 February 1984, Accessed: 04/08/10

1.5 AFTER MORE THAN A DECADE OF CONTROVERSY, MUCH OF THE LITIGATION WAS CONCLUDED. RESULT, MUCH OF THE HELIUM THAT COULD HAVE BEEN SAVED HAD BEEN WASTED TO THE ATMOSPHERE, AND THE GAS FIELDS SUPPLYING THE HELIUM WERE ALMOST DEPLETED.

RE: http://scienceonline.org/cgi/content/abstract/223/4638/789, Science, 24 February 1984, Accessed: 04/08/10

1.6 1996 ACT--PRIVATIZATION ETC.

RE: http://scienceonline.org/cgi/content/abstract/223/4638/789, Science, 24 February 1984, Accessed: 04/08/10

A. Federal government is taken out of the helium business. Congress passed the Helium Privatization Act (H.R. 873) as part of the Seven-Year Balanced Budget Reconciliation Act of 1995 (H.R. 2491).

RE: http://ncseonline.org/NLE/CRSreports/Natural/nrgen-11.cfm?&CFID=8020441&CFTOKEN=57798360, 9 October 1996, Accessed: 04/08/10

See information resource at end of paper: CRS Report on Helium, 9 October 1996.

1.7 FORTUNATELY, A RICH SOURCE OF HELIUM WAS DISCOVERED IN THE RILEY RIDGE FIELD AREA OF WYOMING. THIS OCCURRENCE IS ESTIMATED TO INSURE THAT ADEQUATE SUPPLIES WILL AVAILABLE FOR MANY DECADES.

RE: http://scienceonline.org/cgi/content/abstract/223/4638/789, Science, 24 February 1984, Accessed: 04/08/10

1.8 HELIUM CONTENT----RILEY RIDGE

A. He content of gas (mole %)= .5-1.3%

RE: http://www.searchanddiscovery.net/documents/2006/06121broadhead/images/broadhead.pdf, Accessed: 04/08/10

2.0SIGNIFICANCE OF HELIUM PRODUCTION

2.1 U.S. CONSUMES MORE THAN HALF OF THE WORLD'S HELIUM PRODUCTION ANNUALLY.

RE: http://www.airproducts.com/NR/rdonlyres/F9D0CAA5-2A67-413B-A71F-54C72CD46E67/0/IHHeRecoveryArticlefinal.pdf, September 2004, Accessed 8 April 2010.

2.2 HELIUM PRODUCTION IN THE UNITED STATES IS CURRENTLY FALLING SHORT OF DEMAND AS A RESULT OF REGULAR MAINTENANCE OPERATIONS TO HELIUM PRODUCTION FACILITIES, AS WELL AS SERIOUS PROBLEMS ACCOMPANYING THE SUPERANNUATION OF NATURAL GAS FIELDS.

RE: http://www.tn-sanso.co.jp/en/ir/pdf/e20071018release-2.pdf, 18 October 2007, Accessed: 04/0810

2.3 CONVERSELY DEMAND FOR HELIUM IS GROWING ON A GLOBAL SCALE, AND HELIUM SUPPLY IS THUS EXPECTED TO REMAIN TIGHT FOR SOME TIME TO COME.

RE: http://www.tn-sanso.co.jp/en/ir/pdf/e20071018release-2.pdf, 18 October 2007, Accessed: 04/0810

3.0ESTIMATED TOTAL U.S. HELIUM RESOURCE BASE

3.1 APPROXIMATELY 732 BILLION STANDARD CUBIC FT.--U.S. TOTAL RESOURCE BASE ESTIMATE

3.2 APPROXIMATELY 150.78 BILLION STANDARD CUBIC FT.--U.S. TOTAL MEASURED RESERVES

4.0ESTIMATED WYOMING--RILEY RIDGE RESOURCE BASE

4.1 APPROXIMATELY 321.44 BILLION STANDARD CUBIC FT.--TOTAL RESOURCE BASE ESTIMATE

RE:
http://www.blm.gov/pgdata/etc/medialib/blm/nm/programs/0/helium_docs.Par.56459.File.dat/HeliumTN429_3-09.pdf, 2008. Accessed: 04/08/10

4.2 APPROXIMATELY 76.477 BILLION STANDARD CUBIC FT--.MEASURED HELIUM RESERVES

RE:
http://www.blm.gov/pgdata/etc/medialib/blm/nm/programs/0/helium_docs.Par.56459.File.dat/HeliumTN429_3-09.pdf, 2008. Accessed: 04/08/10

5.0PERSPECTIVE: HELIUM FY-2009 PRODUCTION WORLDWIDE: 5,579.717 MILLION STANDARD CUBIC FT.

5.1 ~76% FROM UNITED STATES

5.2 ~24% FROM ALGERIA

5.3 REMAINDER

A. Russia

B. Poland

C. Qatar

5.4 RANDS BUTTE PLANT, RILEY RIDGE, WYOMING

A. 200 million cubic ft/yr. initial production of Helium estimated.

6.0RE-CAP OF HISTORY OF RILEY RIDGE UNIT AND ITS ROLE WITH THE PROPOSED PROJECT.

6.1 THIS PARTICULAR PROJECT MAY BE NEW; HOWEVER, THE RILEY RIDGE UNIT IS NOT. THE RILEY RIDGE UNIT WAS FORMED IN 1982 AND DISCOVERY TOOK PLACE OVER 20 YEARS PRIOR.

RE: http://www.mathesontrigas.com/newsevents/releases/article.aspx?articleID=97, 22 Oct 2009, Accessed: 04/08/10

6.2 THE FIELD WAS DISCOVERED IN 1961. THE EXISTING WELLS WERE DRILLED BETWEEN 1979 AND 1983. DEVELOPMENT WAS HALTED FOR AN ENVIRONMENTAL IMPACT STUDY (EIS) IN 1983-1984. WHEN THE EIS WAS COMPLETED IN 1984, APPROVAL WAS GIVEN TO DEVELOP THE UNIT WITH APPROXIMATELY 15 WELLS AND PIPING THE GAS TO A 'SHUTE CREEK' TYPE PLANT IN DRY BASIN, A FEW MILES SOUTHWEST OF BIG PINEY. HOWEVER, PRICES HAD DROPPED AND THE PIPELINE COMPANY WAS NO LONGER WILLING TO BUILD THE PLANT."

RE: http://www.mathesontrigas.com/newsevents/releases/article.aspx?articleID=97, 22 Oct 2009, Accessed: 04/08/10

6.3 CIMAREX ACQUIRED ITS INTEREST IN THE PROJECT IN JUNE 2005 WITH THE PURCHASE OF MAGNUM HUNTER (ORIGINALLY THE MESA PETROLEUM INTEREST IN THE UNIT). THE FOLLOWING YEAR, CIMAREX ACQUIRED THE INTERESTS OF THE WILLIAMS IN THE PROJECT.

RE: http://www.mathesontrigas.com/newsevents/releases/article.aspx?articleID=97, 22 Oct 2009, Accessed: 04/08/10

6.4 THE PROJECT THEN BECAME ECONOMICALLY VIABLE IN SEPTEMBER 2005 ACCORDING TO CIMAREX WHEN AN INNOVATIVE "GREEN" PLANT DESIGN WAS PROPOSED THAT WAS SUBSTANTIALLY LESS EXPENSIVE TO BUILD BECAUSE IT DID NOT PROCESS THE CO2 AND H2S BUT SEPARATED THEM FROM THE MARKETABLE GAS AND REINJECTED THEM BACK INTO THE RESERVOIR WITHOUT SIGNIFICANTLY DROPPING THEIR WELL PRESSURE. IN THE FALL OF 2005, SITE SELECTION WORK BEGAN WITH AFFECTED SURFACE OWNERS DAN BUDD, BILL MILLEG, MARK MILLEG AND PAM HAMILTON.

RE: http://www.mathesontrigas.com/newsevents/releases/article.aspx?articleID=97, 22 Oct 2009, Accessed: 04/08/10

6.5 IN THE SUMMER OF 2006, CIMAREX AND JACK WOLD, OPERATOR AND PRESIDENT OF RILEY RIDGE LLC, WORKED OVER SEVERAL OF THE EXISTING WELLS TO DETERMINE THEIR CONDITION AS WELL AS CURRENT RESERVOIR PRESSURE AND GAS COMPOSITION.

RE: http://www.mathesontrigas.com/newsevents/releases/article.aspx?articleID=97, 22 Oct 2009, Accessed: 04/08/10

6.6 IN THE SUMMER OF 2007, CIMAREX REACHED AGREEMENT WITH WOLD OIL PROPERTIES TO TURN OVER OPERATIONS OF THE UNIT TO CIMAREX. IN JANUARY 2008, THE BUREAU OF LAND MANAGEMENT (BLM) APPROVED CIMAREX AS THE UNIT OPERATOR.

RE: http://www.mathesontrigas.com/newsevents/releases/article.aspx?articleID=97, 22 Oct 2009, Accessed: 04/08/10

7.0RANDS BUTTE PROJECT OVERVIEW

7.1 THE PLANT, DESIGNED TO PRODUCE 200 MILLION STANDARD CUBIC FEET OF NATURAL GAS PER YEAR AT START-UP, WITH EXPECTATIONS FOR FUTURE CAPACITY EXPANSION, WOULD PROCESS CRUDE HELIUM PRODUCED BY A NATURAL GAS PROCESSING FACILITY THAT WOULD BE OWNED BY CIMAREX ENERGY CO. (NYSE: XEC) AND THEIR PARTNER, RILEY RIDGE LLC.

RE: http://www.mathesontrigas.com/newsevents/releases/article.aspx?articleID=97, 22 Oct 2009, Accessed: 04/08/10

8.0SIGNIFICANCE PROJECT

8.1 COMPANY OFFICIALS HAVE SAID THE $100 MILLION PROJECT EFFORT WOULD ACCOUNT FOR ABOUT 30 PERCENT OF THE WORLD'S ANNUAL HELIUM PRODUCTION WHEN COMPLETED.

RE: http://www.warws.com/documents/OfficialslookatcontestedRileyRidgesiteforgasplant.pdf, Casper Star Tribune, , Accessed: 040810

8.2 UPON COMPLETION, THE RANDS BUTTE PROJECT PRODUCTION PLANT WILL BE THE 10TH LIQUID HELIUM PLANT OPERATING IN THE UNITED STATES, AND THE FIRST NEW U.S. FACILITY BUILT SINCE 2000.

RE: http://www.eetimes.com/news/semi/showArticle.jhtml?articleID=202403994, 17 October 2007. Accessed: 04/08/10

9.0CURRENT PRICE OF HELIUM

9.1 $115.00--$145.00 MCF

10.0 MONETARY BENEFIT TO THE U.S. TREASURY

10.1 121/2%--20% ROYALTY DEPENDING ON CONTRACT.

Appendix A

Background Paper in Support of the American Physical Society's Statement on Conservation of Helium

RE: http://www.aps.org/policy/reports/popa-reports/helium.cfm, 2010, Accessed: 04/08/10

Gordon Dunn, University of Colorado; Edward Gerjuoy, University of Pittsburgh; Robert L. Park, University of Maryland

Helium Properties and Uses

Helium is absolutely essential to achieving the extremely cold temperatures required by many current and emerging technologies. The cryogenic (low temperature) uses of helium stem from the fact that liquefied helium has the lowest boiling point of any substance, including hydrogen. Helium boils at only 4 K (-452 Fahrenheit). On this same scale, hydrogen boils at 20 K, and at 4 K is already a solid. All other gases boil at substantially higher temperatures; nitrogen and oxygen, for instance, boil at 77 K and 90 K respectively. Since modern technologies often require extremely low temperatures, cryogenic applications of helium have risen steadily in recent years and currently amount to 25% of total usage.

In particular, liquid helium is the only cryogenic fluid that can be used to reach the low temperatures required for today's superconducting electromagnets. Helium-cooled superconducting magnets are employed in the increasingly important medical diagnostic tool known as MRI (magnetic resonance imaging). Superconducting magnets also are a standard feature of the high-energy accelerators physicists use for research on fundamental particles, and superconducting magnets will be required in the emerging transportation technology known as MAGLEV, wherein trains are to be magnetically levitated above their tracks, thereby permitting very high speed operation without the usual friction losses.

Superconducting electric power transmission lines are a potential technology that will require large quantities of helium. Such lines would avoid the wasteful energy losses in present electric power transmission. Although a new unconventional class of superconductors was discovered in 1986, the so-called high-temperature superconductors which maintain their superconducting properties at temperatures well above the 77 K temperature of liquid nitrogen, it has not yet been possible to fabricate these new superconductors into wires capable of carrying large currents.

Superconductivity is also essential to so-called Josephson junctions, from which SQUIDs (superconducting quantum interference devices) are manufactured. SQUIDs can detect very minute changes in electric currents and/or magnetic fields, even permitting the mapping of brain activity. Josephson junctions also can be used in very high speed micro-electronic switching devices for possible incorporation into the computers of the future.

In addition to these technological applications, liquid helium is an essential cryogenic fluid in almost every field of modern laboratory research, and thus to the technologies of the future. Indeed, it was basic research into the unusual properties of matter at liquid helium temperatures that led to the technological uses of superconductivity. Helium is also used to cool infrared and other detectors (in modern telescopes for example) to very low temperatures to reduce background noise, permitting detection of far weaker signals. Cryogenic pumping at liquid helium temperatures produces the extremely high vacuums often required in research.

Apart from its cryogenic applications, there are also more conventional uses for helium. The second lightest gas (after hydrogen), it is also chemically inert, which makes it a safe "lifting gas," as compared to hydrogen, but less than 10% of current helium consumption is for lifting. Helium is also used to create an inert environment to prevent oxidation or corrosion in welding, which accounts for about 25% of total helium consumption. Other uses include inert atmospheres for advanced fabrication techniques, such as semiconductor crystal growth and fiber-optic production (about 12%), purging large tanks, such as NASA fuel tanks (23%), leak detection in sealed systems (2%), and medical applications (another 2%).

Helium Resources

Supplies of helium are finite and irreplaceable. Although the atmosphere contains the vast bulk of the world's helium, about 700,000 billion cubic feet (BCF), it is at such small concentration (0.0005%) that the energy cost of recovering it is prohibitive. The remaining helium, about 1120 BCF, is a constituent of some natural gas (methane) fields. Of these fields, helium is most inexpensively recoverable from the so-called "helium-rich" fields, defined as fields containing more than 0.3% helium. Helium-rich fields are found only in the U.S. and to a small extent in Canada. About 85% of the helium-rich U.S. resources are in the large Hugoton and Panhandle fields covering parts of Kansas, Oklahoma and Texas, and in the Riley Ridge fields of southwest Wyoming.

Most of the helium in gas fields outside the U.S. is at a concentration less than 0.1%. Based on the reasonable assumption that extraction energy costs are proportional to the inverse of the helium concentration, the energy required to extract helium from a helium-rich U.S. field is considerably less than the corresponding energy for extraction from fields elsewhere in the world. The actual costs in dollars of helium extraction from the gas fields, however, are not easily compared, since those costs depend on the economic worth of the methane that contains the helium. However, the U.S. is the world's major producer, consumer and exporter of helium. Typically, exports account for about one-third of total domestic production. For example, in 1992 the U.S. exported 1.09 BCF, far more than all the rest of the world produced, and consumed 2.26 BCF domestically; about 0.3 BCF of this domestic consumption is by U.S. agencies, mainly NASA and the DOD. U.S. helium sales have increased from .67 BCF in 1970, to 1.1 BCF in 1980, to 3.5 BCF in 1995.

About 6.9 BCF of helium is contained in the natural gas pumped from U.S. wells each year. About 3.3 BCF is extracted by helium producers for domestic and foreign consumption; 0.36 BCF is lost to the atmosphere during the extraction process; and the other 3.2 BCF is simply lost to the atmosphere during the burning of natural gas. Thus, the rate at which helium is depleted depends in large part on the rate of natural gas consumption. Some 10% of the total production of refined helium in the United States presently is performed by the Bureau of Mines, using facilities dating from 40 to 60 years ago; this helium production just about meets U.S. agency needs. The remaining 3.0 BCF annual helium production is extracted by private producers and sold to private consumers.

The 3.2 BCF presently being vented to the atmosphere is lost forever. Recapture from the atmosphere is made quite impractical by the enormous cost. To extract 3.2 BCF of helium from the atmosphere would require an expenditure of energy amounting to perhaps 5% of the total energy consumption of the U.S. Presumably, however, private industry would be willing to extract the helium that is now wasted if a buyer could be found. Under the Helium Act of 1960, 50 U.S. Code '160 ff., the Secretary of the Interior was authorized to

make just such purchases, for the purpose of establishing a helium conservation program. During the years 1962-1973, 34 BCF of helium were purchased under this program and stored by the Bureau of Mines in a gas field (Cliffside) near Amarillo, TX; the Cliffside reservoir is connected via pipelines to many of the helium-producing fields in the region. This purchasing program was terminated in 1973; the government-owned helium stored in Cliffside has remained approximately constant, at 32 BCF, since 1990.

Even if the demand for U.S. helium does not grow as rapidly as might be inferred from comparison of the 1970 and 1995 sales figures quoted earlier, a rising demand for natural gas will accelerate the depletion of our helium reserves. Any unextracted helium will simply be lost during burning. The Bureau of Mines estimates that the helium-rich high BTU gas fields presently producing the bulk of this nation's helium will be depleted in about 25 years, after which the cost of helium is likely to rise greatly in constant dollars.

Legislation and Policy Considerations

Legislation enacted by Congress as part of the Budget Reconciliation bill would completely remove the U.S. government from helium extraction and related activities and require the selloff of the helium reserve beginning in 2005. The Clinton Administration has also sponsored legislation to abolish the helium reserve and, in fact, proposed to do so on an even shorter time scale. The following comments are offered on the current legislation:

1. New production of helium by the Secretary of the Interior is forbidden; the Bureau of Mines' production facilities will be sold as excess property. The Bureau of Mines already has been abolished by other legislation, starting January 1, 1996, but the present legislation would make it impossible for the government to continue helium production via another U.S. agency. There is no objection to this feature of the Act. The private extractors surely will increase their production to make up for the 0.3 BCF of helium now being produced by the Bureau; there is no reason why the cost to the government for purchase of helium from private industry should significantly exceed the government's own costs of production.

2. The legislation requires that all but 0.6 BCF of the 32 BCF helium reserve in Cliffside be offered for sale by January 1, 2015; 0.6 BCF is just enough to meet present U.S. agency needs for a period of two years. The helium sales offering must begin no later than January 1, 2005, and continue at a rate that would minimally disrupt the private helium extraction industry. This feature of the act is seriously misguided. It is prudent to maintain a helium reserve against the not very distant day when essential high-tech helium needs must be met by extraction, if not from the atmosphere at enormous cost, then surely from gas fields which require very much greater helium prices (in constant dollars) than today in order to produce helium profitably. Moreover, retention costs are extremely small. Since the terms of the Act require that some helium be retained in the Cliffside reserve even until 2015, the government will realize little savings in its annual costs of operating and maintaining the Cliffside reserve. In any case, these operating and maintenance costs have been very modest (they are budgeted to total only $2 million in fiscal year 1996) and were just about met by the revenue Cliffside earned for storing privately extracted helium during periods when production exceeds demand (usually the winter months, when very large amounts of natural gas are used for residential heating).

3. The legislation makes no provision for saving helium that is now being wasted. Because more helium is being pumped from the ground along with natural gas than the private extractors presently can market, 3.2 BCF per year is being lost to the atmosphere. We believe the arguments for retaining the reserve make an equally compelling case for storage of this otherwise wasted helium. The helium reserve should be a very valuable asset in the coming decades. It seems likely that, during the next two decades, the market price of helium will increase at an average rate of no less than 6.5%, the approximate interest rate on Treasury bonds. The costs of extracting helium will increase enormously once our helium-rich gas reserves are exhausted. Mechanisms to finance the storage of helium against that day, such as a consumption fee, should be examined.

The helium issue has been badly muddled by claims that the selloff is required to pay off the reserve's $1.4 billion "debt". This so-called "debt" was incurred because the helium purchasing program was financed by a "loan" of $252 million from the Treasury to the Bureau of Mines, instead of by a direct appropriation; compound interest since 1960 has increased the total "owed" to $1.4 billion. From the viewpoint of the U.S. government's net worth, however, regarding this $1.4 billion as a "debt" to the Treasury, which the Treasury should collect from the Bureau, is purely illusory; any transfer of funds from one government agency to another neither reduces the Treasury's national debt nor increases the budget deficit by a single penny, as the General Accounting Office (GAO), the Office of Management and Budget (OMB) and the Department of Interior Inspector General have sought to make clear. Selling off the nation's helium reserve would be both economically and technologically shortsighted.

(This Background Paper was prepared by members of the Panel on Public Affairs of the American Physical Society. It is meant to reflect the considerations that underlie the Statement on Conservation of Helium issued by the American Physical Society. It has not, however, been reviewed by the Society.)

Appendix B.

CRS Report to Congress on Helium Divestment. October 9, 1996.: Abstracted Portion

RE: http://ncseonline.org/NLE/CRSreports/Natural/nrgen-11.cfm?&CFID=8020441&CFTOKEN=57798360, 9 October 1996, Accessed: 04/08/10

Helium, present in relatively high concentrations in only a few natural gas fields, is released to the atmosphere and wasted when the natural gas is burned as fuel. Government involvement in helium conservation dates to the Helium Act of 1925 which authorized the Bureau of Mines to build and operate a large-scale helium extraction and purification plant. From 1929 until 1960 the federal government was the only domestic helium producer. In 1960, Congress amended the Helium Act to provide incentives to natural gas producers for stripping natural gas of its helium, for purchase of the separated helium by the government, and for its long-term storage. With over 960 million cubic meters (34.6 billion cubic feet) of helium in government storage and a large private helium recovery industry, questions arise as to the need for either the federal helium extraction program or the federally maintained helium stockpile.

Amid controversy between Congress and the President over the Department of the Interior appropriations and the federal budget, the Bureau of Mines has been terminated. The budget battle has not been fought over the Bureau of Mines specifically, but it has become a casualty of the conflict. Several functions have been transferred to other agencies within the Department of the Interior or to other departments. (See Endnote 1.)

In a move which would take the federal government out of the helium business, Congress passed the Helium Privatization Act (H.R. 873) as part of the Seven-Year Balanced Budget Reconciliation Act of 1995 (H.R. 2491). Although the measure died when the President vetoed the Budget Act on December 6, 1995, the Administration has made a goal the privatization of the federal helium program. On April 30, 1996, the House suspended the rules and passed H.R. 3008, the Helium Privatization Act as agreed to in the House-Senate conference on the Budget Act. Subsequently, the Senate Energy and Natural Resources Committee amended the bill to provide for the National Academy of Sciences to study how best to dispose of the helium reserve. On September 26, 1996, with limited time remaining for the 104th Congress, the House again suspended the rules and passed H.R. 4168, a new bill containing the Senate Committee language. This would avoid the need for a conference if the Senate would also pass the same bill. The Senate did so on September 28, 1996. This report reviews the origin and development of the Federal Helium Program; analyzes the choices that Congress faced in terminating the program; reviews the issues that the National Academy of Sciences will study, and summarizes H.R. 4168.

Background

Helium is an inert gas with unique properties. It is used in large quantities in space, defense, and advanced energy systems. Its major uses include cryogenics in medical and superconductivity applications, cover gas in arc welding, and for pressurizing and purging fuel tanks and vessels in the space program. Other important uses include breathing gas mixtures for deep sea diving, controlled atmospheres for growing crystals for transistors, heat transfer mediums for nuclear power generators, leak detection, chromatography, and lifting gas. If temperatures below -429 F are required, there is no substitute for helium. Argon can be substituted for helium in welding and hydrogen for helium as a lifting gas if flammability is not a concern.

Federal interest in helium began with World War I when its military value as an inert lifting gas was recognized by the Army and Navy. The Bureau of Mines' involvement in the Helium Program dates back to passage of the Helium Act of 1925 under which the Bureau was authorized to build and operate a large-scale helium extraction and purification plant. This plant went into operation in 1929 at Amarillo, Texas. Demand increased significantly during World War II and four more plants were built, including the Exell, Texas plant, which is now the Bureau's only operating plant. Private helium operations followed passage of the Helium Act Amendments of 1960 (P.L. 86-777) which authorized the Secretary of the Interior (authority delegated to the Bureau of Mines) to enter into long-term contracts for the acquisition and conservation of helium to be stored in the Cliffside Reservoir near Amarillo, Texas. The Act directed the Secretary of the Interior to operate and maintain helium production and purification plants and related storage, transmission, and shipping facilities. The Act also authorized the Secretary to borrow from the Treasury up to $47.5 million per year, at compound interest, to purchase helium in lieu of direct appropriations. The 1960 Act required the Secretary of the Interior to determine the net worth of assets of the Helium Program acquired prior to 1960 ($40 million) and establish this as debt in the Helium Fund to which subsequent borrowing would be added. The Act stipulated that the Bureau of Mines set prices that would cover all of the program's costs, including debt and interest, and provided a period of 25 years to pay back the debt (with a 10-year extension to 1995). In addition, federal agencies and contractors were required to buy helium from the Bureau of Mines.

As a result of the 1960 Act, four private natural gas producing companies built five helium extraction facilities and entered into 22-year contracts with the Bureau of Mines. Because demand for helium did not meet the forecast of the late 1950s, the Bureau of Mines began to borrow from the Treasury as authorized to pay for helium purchases. In 1973, the government had 970 million cubic meters (35 billion cubic feet) of helium in storage, which was far in excess of projected government needs, and canceled the purchase contracts. This led to several years of litigation during which most private helium extraction plants remained idle.

Helium is a constituent of natural gas deposits ranging from a trace to about 8 percent by volume. Helium is also a minor constituent (0.0005 %) of the atmosphere. Most natural gas is burned as fuel without first recovering the helium. Consequently, much helium is lost to the atmosphere and diluted beyond effective recovery.

The helium resources of the United States are estimated to be about 13 billion cubic meters (470 billion cubic feet). This includes 1.0 billion cubic meters (34 billion cubic feet) in storage in the government stockpile, 6.8 billion cubic meters (250 billion cubic feet) in helium-rich natural gas (0.3% helium or more), and 5.2 billion cubic meters (190 billion cubic feet) in helium-lean natural gas (less than 0.3% helium). Other than the two major helium-rich natural gas fields (Riley Ridge in southwestern Wyoming and Hugoton extending from southwest Kansas through the Oklahoma and Texas Panhandles), most of the helium-rich natural gas fields in the United States will be exhausted by the year 2000. (See Endnote 2.) As these fields deplete, future production will probably shift to extracting helium from helium-rich natural gas with little fuel value and from helium-lean resources.

World helium resources exclusive of the United States are estimated at 18 billion cubic meters (650 billion cubic feet) of which 9.2 billion cubic meters are in the former Soviet Union, mostly in Russia. Other helium resources are located in Algeria, 2.1 billion cubic

meters; Canada, 2.1 billion cubic meters; China, 1.1 billion cubic meters; Poland, 0.8 billion cubic meters; and the Netherlands, 0.7 billion cubic meters.

Prior to passage of the Helium Act Amendments of 1960, the only helium extraction plants in the world were those owned by the U.S. Bureau of Mines. The United States remains the world's major producer and consumer of helium, consuming approximately 72 million cubic meters and exporting 24 million cubic meters in addition. The United States exports over 4 times as much helium as is produced in all of the rest of the world. The total sales value of domestic consumption and exports of refined helium is nearly $200 million of which the government produces less than 10%. Domestic production comes from the government helium extraction plant in Texas and twelve privately owned plants (five in Kansas, four in Texas, and one each in Colorado, Utah, and Wyoming).

Appendix B
Project Design Schematics

Drilling Prognosis

Well:	**Riley Ridge 20-14**	**AFE No.:**	247007
County, State	Sublette Co., WY	**API #:**	49-035-26670
Surface Location:	836' FSL & 2442' FEL Sec 17 T29N R114W	**Property No.:**	497199-003
Wellhead:	16" 5M SOWx 16-3/4" 5M x 13-5/8" 5M x 11"5M	**Field:**	Riley Ridge Field
Tubing Head:	5-1/8" 5M side valves		
Xmas Tree	11" 5M with 5-1/8" 5M bore & side valves		
Tubing:	5-1/2" 17# SM2245/VM825 120 VAM Top Reg 12,800' MD / 12,245' TVD	5" 15# SM2245/VM825 120 FJL 15,880' MD / 15,266' TVD (3,080')	

Hole Size	Formation Tops / Logs	Cement	Mud Weight
24"	**140' 30" Conductor** **2,225' 16" 84# P-110 BTC**	Lead cement, 3510 sx. Yld 1.8 @12.5 ppg. (1181.5 bbls), Tail 855 sx. Yld 1.21 @15.4 ppg. 184 bbls Total cement to surface approx. 605 bbls.	
14-3/4"	**TOC 4,750' per bond long 7/25/09** **9,427' MD / 9,016' TVD 10-3/4" 65.7# HCQ-125 BTC**	Pump 50 bbls 10.0 ppg spacer, mix & pump 1030 sacks premium lite lead cmt + .2% R-3 + .2% FL-63 + .25% CD-32 .04 static free + 1gal/100 sks FP-13L; followed by 290 sacks class G tail cmt + 3% fL-63 + .25% R-3 + .2% CD-32 + 20% silica sand + .04 static free + 1gal/100 sks FP-13L.	
9-1/2"	**11,500' MD 11,000' TVD Planned TOC** **Salt** **Packer set at 15,880' MD/15,266' TVD** **2,386' MD/2,386'TVD 7-5/8" 39# C-110 TC-II** **12,872' MD/12,317'TVD 7-5/8" 39# T-95 TC-II** **14,364' MD/13,762'TVD 7-5/8" 55.30# L-80 LTC** **16,895' MD/16,280'TVD 7" 32# HCL-80 LTC**	Pump 50 bbls Ultra Spacer at 11.2 ppg. Lead Cement 336 sks Light weight + 5% alt + 1% FL-63 + 0.06 gps R-8L + 5% MPA-3 + 20% Silaca Flour mixed at 12.0 ppg. yield 3.06, total slurry 183 bbls.(TOC estimate 11,500' md/11,000' TVD) Tail Cement 410 sks 50:50:2 + 1% FL-63 + .08 gps R-8L + 0.5% SMS + 20% Silica Flour + 1 gal/100sk FP-13L mixed at 14.5 ppg. yield 1.41, total slurry 103 bbls. (TOC estimate 15,400' md/14,800' tvd)	

TI 251 _ _ _ _ _

RCMS Code: CU

230 kV Structure—Shielded, Single-Circuit—Dead-End, 15° to 65°

May be used
In raptor areas

Scope

This structure is used for strain deadends with line angles up to 65° when shielding is required.

Line Angle: 15° to 65°

Standard References

TD 001	*Poles—General Information*
TD 100	*Conductor—General Information*
TD 200	*Shield and Guy Wire—General Information*
TD 300	*Grounding—General Information*
TD 500	*Tension Hardware—General Information*
TD 600	*Guys and Anchors—General Information*
TD 800	*Insulators—General Information*
TD 900	*Bolts, Nuts, and Washers—General Information*

Conductor	Code
1/0 ACSR "Raven"	A
4/0 ACSR "Penguin"	B
397.5 ACSR "Ibis"	C
795 ACSR "Drake"	D
954 ACSR "Cardinal"	E
1272 ACSR "Bittern"	F
795 AAC "Arbutus"	G
1272 AAC "Narcissus"	H
None	Z

Conductor Accessories	Code
Suspension Hardware	
Armor rod	A
Line guard	B
None	Z
Tension Hardware Compression Fittings	
Jumper w/armor rod	C
Jumper w/o armor rod	D
Tension Hardware Bolted Fittings	
Jumper w/armor rod	E
Jumper w/o armor rod	F

Shield Wire	Code
3/8 EHS	A
1/2 EHS	B
7#8 AW	C
7#6 AW	D
3/8 EHS w/AGS	E
1/2 EHS w/AGS	F
7#8 AW w/AGS	G
7#6 AW w/AGS	H
3/8 EHS w/armor rod	I
1/2 EHS w/armor rod	J
7#8 AW w/armor rod	K
7#6 AW w/armor rod	L
None	Z

Insulation	Code
Porcelain	A
Polymer	B

Pole Class	Species	Code
3	Douglas fir	A
2	Douglas fir	B
1	Douglas fir	C
H1	Douglas fir	D
H2	Douglas fir	E
3	Western red cedar	F
2	Western red cedar	G
1	Western red cedar	H
H1	Western red cedar	I
H2	Western red cedar	J

TI 251

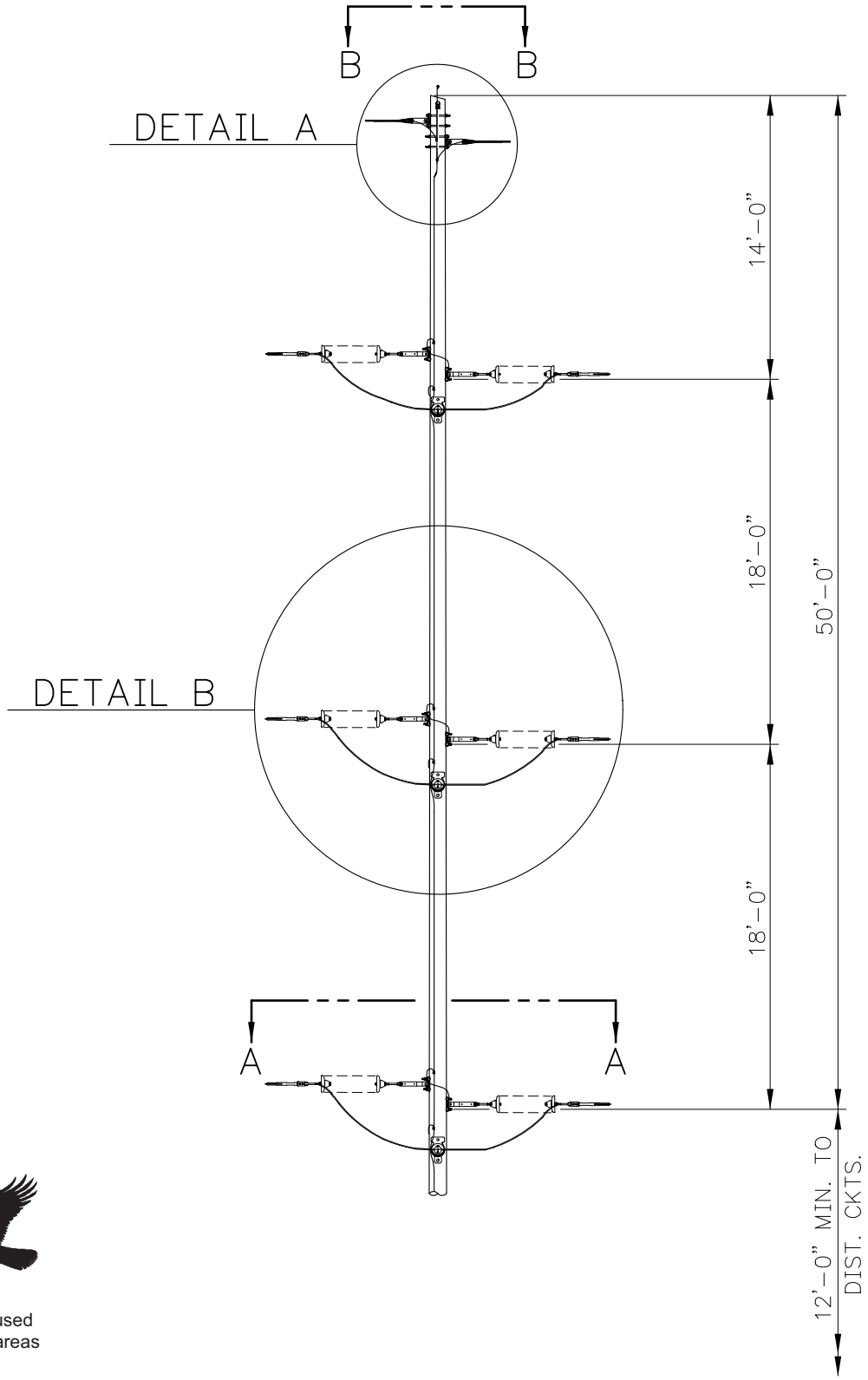

May be used
In raptor areas

PACIFICORP PACIFIC POWER UTAH POWER		230 kV Structure Shielded, Single-Circuit Dead-End, 15° to 65°	Transmission Construction Standard
TI 251 Page 2 of 4	17 Mar 97		Stds Team Leader (C. L. Wright): CLW Standards Services (M. Brimhall): MB

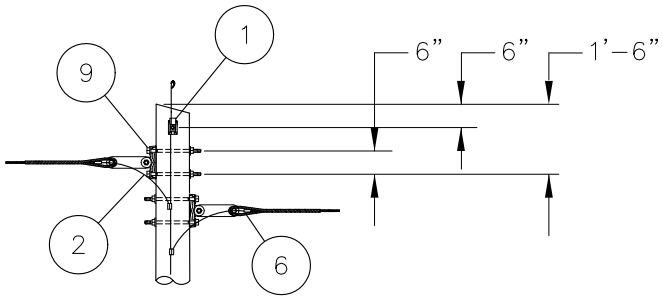

DETAIL A

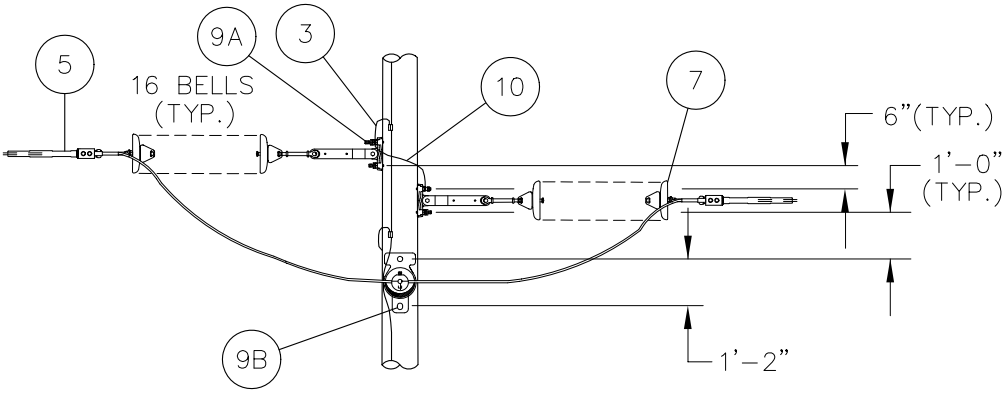

DETAIL B

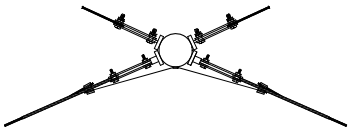

SECTION B-B

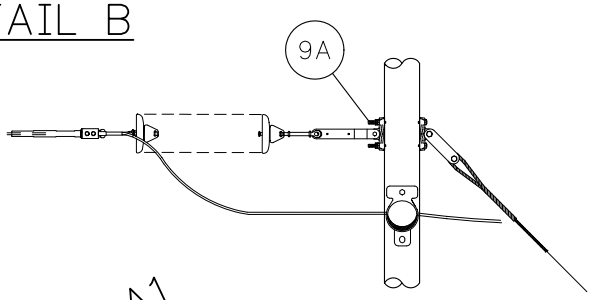

SECT. A1-A1

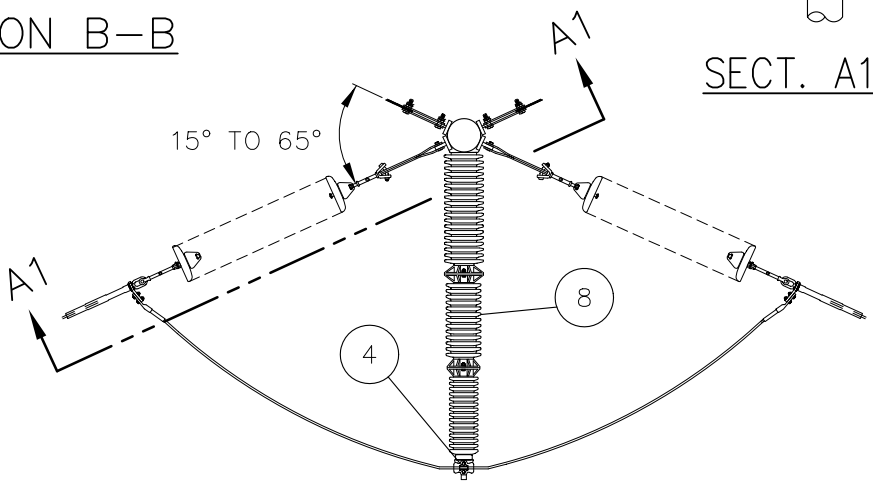

SECTION A-A

Transmission Construction Standard	230 kV Structure Shielded, Single-Circuit Dead-End, 15° to 65°	PACIFICORP PACIFIC POWER UTAH POWER	
Stds Team Leader (C. L. Wright): CLW Standards Services (M. Brimhall):		17 Mar 97	TI 251 Page 3 of 4

Table 1 – Components

Item	Qty.	Standard	Description
1	1	TD 022_	Pole Assembly, Split-Bolt, 3/4” Diameter
2	2	TD 325_	Grounding Assembly, Shield Wire–to–Pole Ground
3	6	TD 322E	Grounding Assembly, Hardware-to-Structure Ground
4	3	TD 420_ _ A	Suspension Assembly, Conductor
5	6	TD 520_ _	Tension Assembly, Conductor
6	2	TD 525_ A	Tension Assembly, Shield Wire, Guy Grip
7	6	TD 826E _ A	Insulator Assembly, Dead-End, with Link
8	3	TD 831F	Insulator, Post, Horizontal, Polymer
8	3	TD 835F	Insulator, Post, Horizontal, Porcelain
9A	16	■TD 928_ D	Bolt Assembly, Machine, 1-Inch
9B	6	TD 928_ E	Bolt Assembly, Machine, 1-Inch
10	4	TD 321E Z	Grounding Assembly, Hardware–to–Hardware

Table 2 – Additional Material To Be Specified To Complete This Structure

Item	Qty.	Standard	Description
A	1	TD 020_ _ A	Wood Pole Assembly
B	8	TD 620A _ _ _	Guy Assembly
C	AS REQ	TD 630_ _ _	Anchor Assembly

Notes

1. All hardware is to be bonded when it is separated by less than 8 inches. Bond wire shall loop around the bolt.
2. Install spring washers with loop end up where possible.
3. All pole attachment hardware shall be bonded to the pole grounding assembly.
4. In contaminated areas, use TD 840, code “F” for post insulators.
5. ■ Class 1 or better pole is recommended.

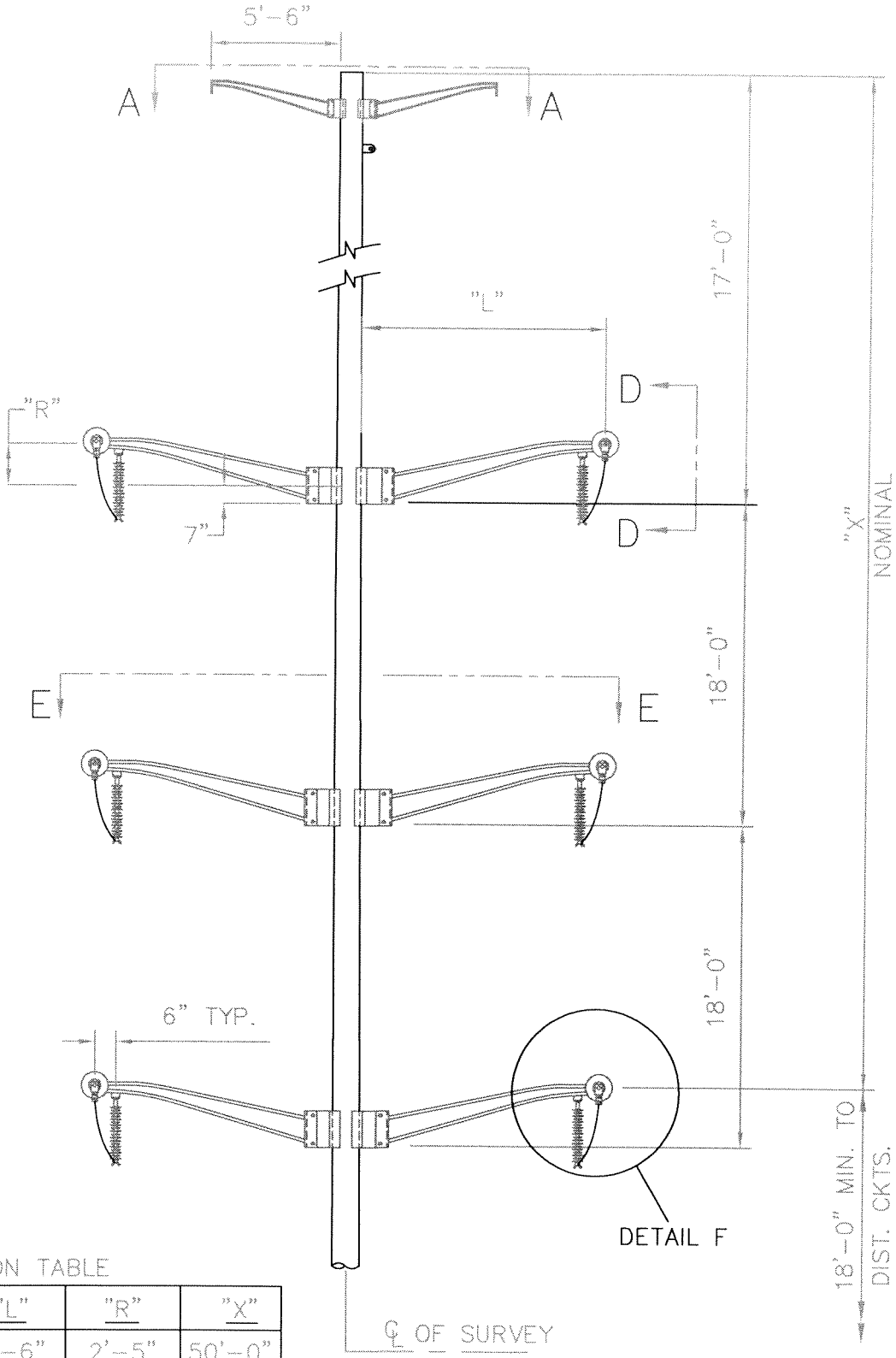

DIMENSION TABLE

LINE ANGLE	"L"	"R"	"X"
0°-30°	9'-6"	2'-5"	50'-0"
30°-60°	10'-6"	2'-9"	49'-8"
60°-90°	12'-6"	3'-5"	49'-0"

REV	DATE	DESC.	BY	CHK	APP

ER/PR		230KV STRUCTURE SHIELDED, D. C. DEADEND, 0° TO 90°, STEEL POLE W/ DAVIT ARMS	PACIFICORP PACIFIC
DATE	6 SEPT 06		
ENG	DES		SHEET 1 of 2 / SCALE NONE
DR	CH		
APP			T1285 / REV. 0

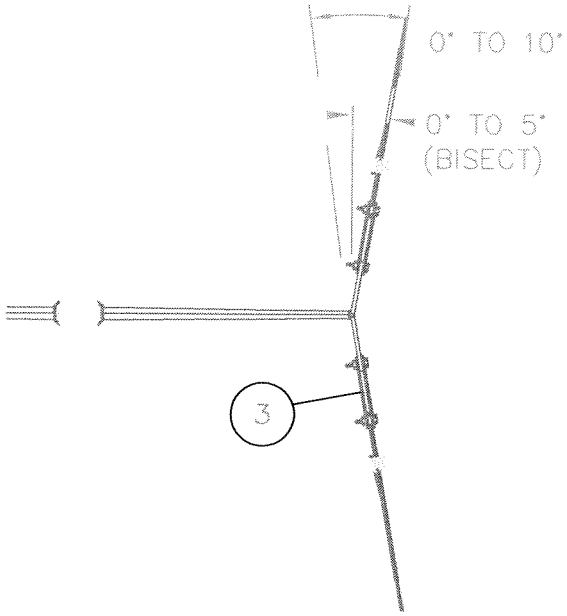

SECTION A–A

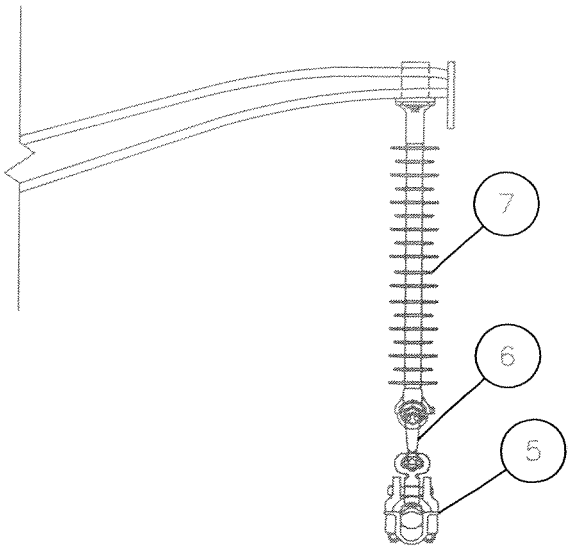

DETAIL F

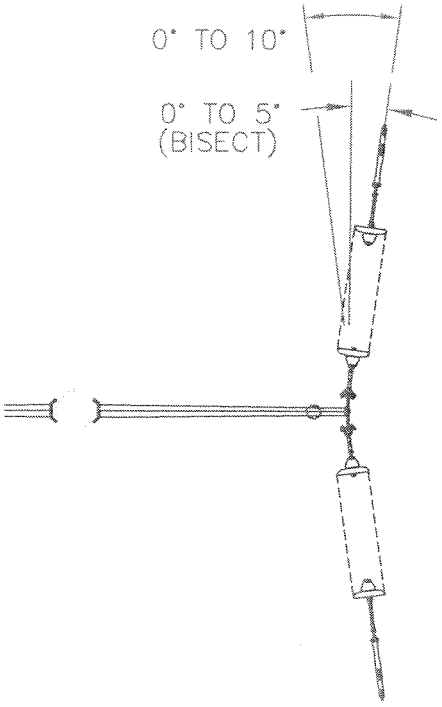

SECTION E–E

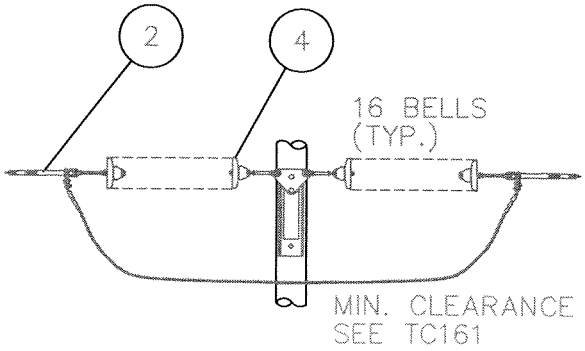

SECTION D–D

(TYPICAL)

REV	DATE	DESC.	BY	CHK	APP

ER/PR		230KV STRUCTURE SHIELDED D. C. DEAD–END, 0° TO 90°, STEEL POLE W/ DAVIT ARMS	PACIFICORP PACIFIC
DATE	9/6/06		
ENG	DES		
DR	CH		SHEET 2 of 2 / SCALE NONE
APP			TI285F2 / REV. 1

TI 403 _ _ _ _ _

RCMS Code: CU

May be used
In raptor areas

230 kV Structure—Shielded, H Frame—Tangent, with Steel Truss

Scope

This structure is used when shielding is required.

Line Angle: 0° to 1°

Standard References

TD 001	*Poles—General Information*
TD 100	*Conductor—General Information*
TD 200	*Shield and Guy Wire—General Information*
TD 300	*Grounding—General Information*
TD 400	*Suspension Hardware—General Information*
TD 700	*Crossarms and Braces—General Information*
TD 800	*Insulators—General Information*
TD 900	*Bolts, Nuts, and Washers—General Information*

Conductor	Code
1/0 ACSR “Raven”	A
4/0 ACSR “Penguin”	B
397.5 ACSR “Ibis”	C
795 ACSR “Drake”	D
954 ACSR “Cardinal”	E
1272 ACSR “Bittern”	F
795 AAC “Arbutus”	G
1272 AAC “Narcissus”	H
None	Z

Conductor Accessories	Code
Suspension Hardware	
Armor rod	A
Line guard	B
None	Z
~~Tension Hardware Compression Fittings~~	
~~Jumper w/armor rod~~	~~C~~
~~Jumper w/o armor rod~~	~~D~~
~~Tension Hardware Bolted Fittings~~	
~~Jumper w/armor rod~~	~~E~~
~~Jumper w/o armor rod~~	~~F~~

Shield Wire	Code
3/8 EHS	A
1/2 EHS	B
7#8 AW	C
7#6 AW	D
3/8 EHS w/AGS	E
1/2 EHS w/AGS	F
7#8 AW w/AGS	G
7#6 AW w/AGS	H
3/8 EHS w/armor rod	I
1/2 EHS w/armor rod	J
7#8 AW w/armor rod	K
7#6 AW w/armor rod	L
None	Z

Insulation	Code
Porcelain	A
Polymer	B

Pole Class	Species	Code
3	Douglas fir	A
2	Douglas fir	B
1	Douglas fir	C
H1	Douglas fir	D
H2	Douglas fir	E
3	Western red cedar	F
2	Western red cedar	G
1	Western red cedar	H
H1	Western red cedar	I
H2	Western red cedar	J

TI 403

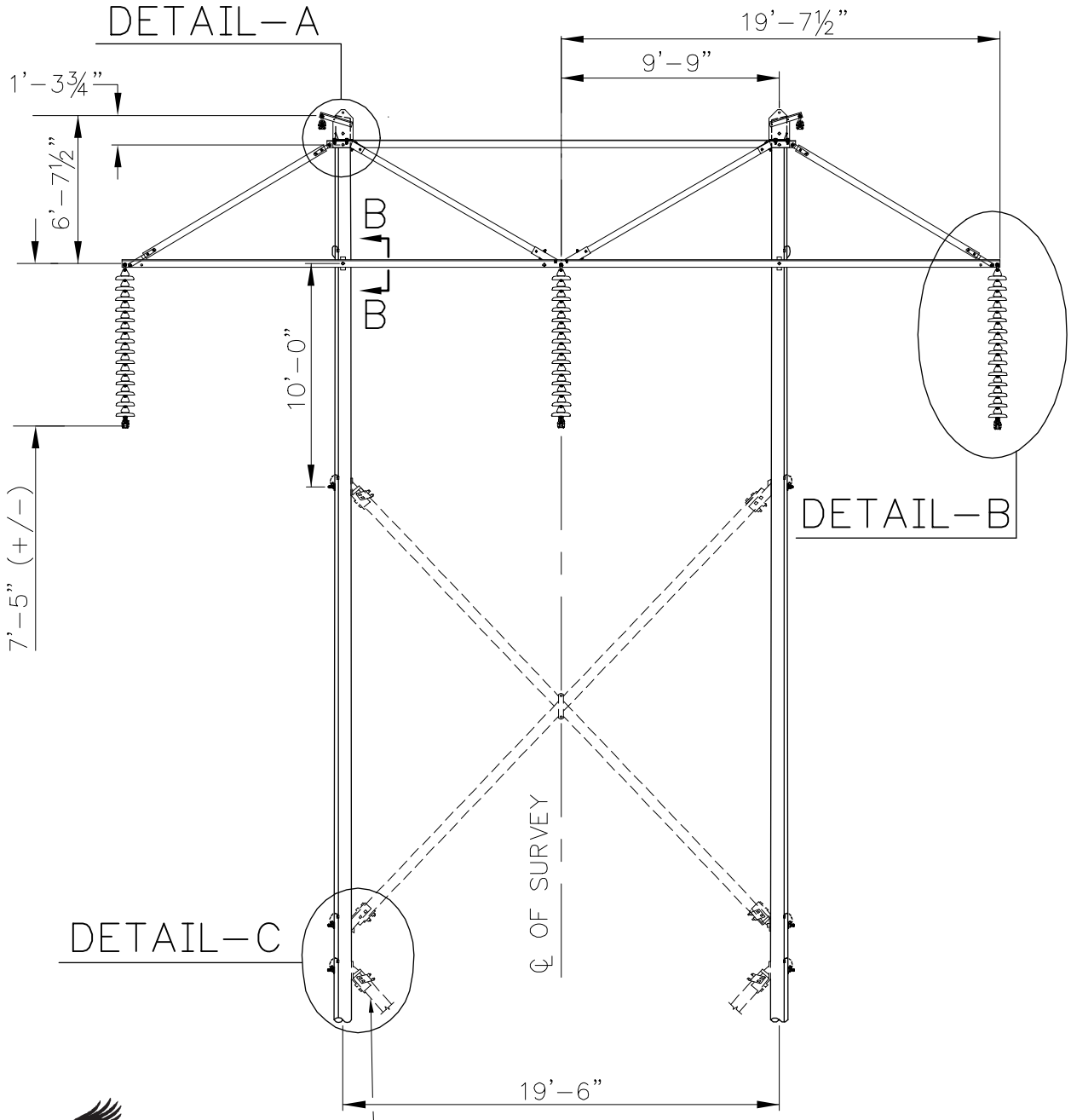

May be used
In raptor areas

PACIFICORP PACIFIC POWER UTAH POWER		**230 kV Structure Shielded, H Frame Tangent, with Steel Truss**	**Transmission Construction Standard**
TI 403 Page 2 of 4	27 May 97		Stds Team Leader (C. L. Wright): CLW Standards Services (M. Brimhall): MWB

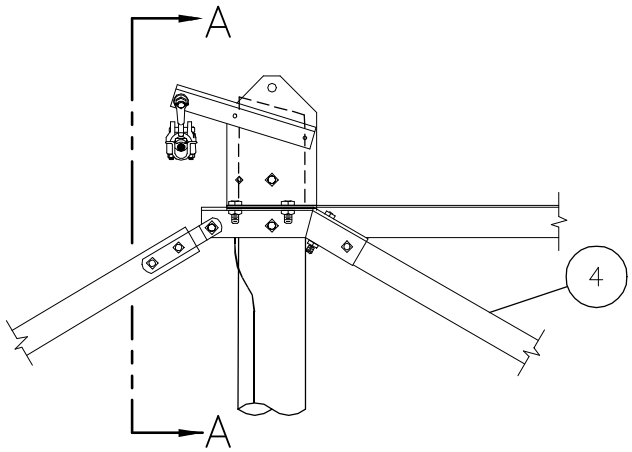

DETAIL A

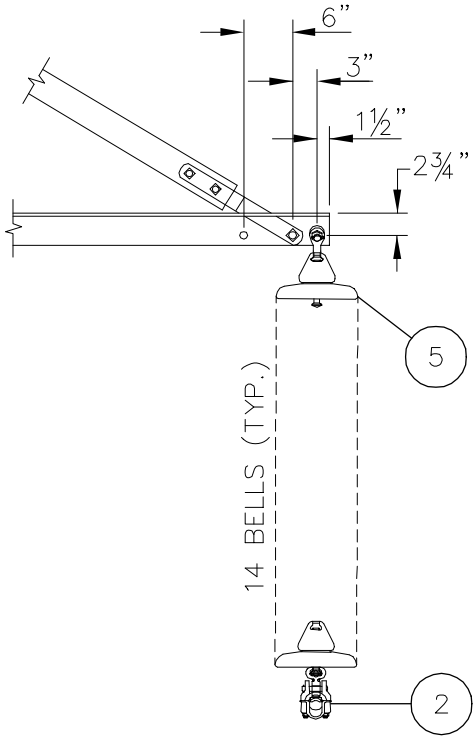

DETAIL B

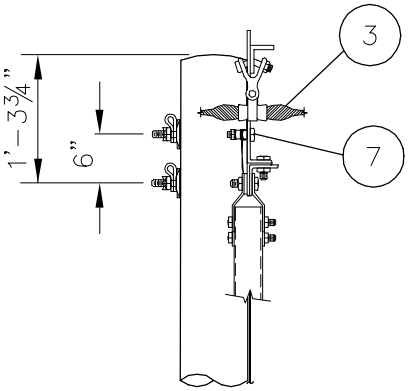

SECTION A–A

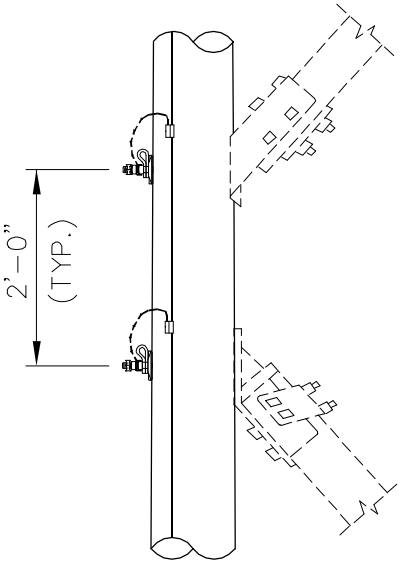

DETAIL C

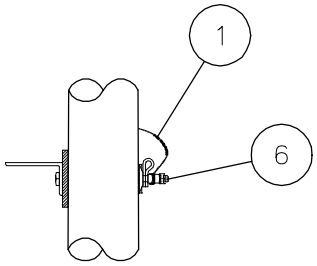

SECTION B–B

Transmission Construction Standard	230 kV Structure Shielded, H Frame Tangent, with Steel Truss	PACIFICORP PACIFIC POWER UTAH POWER	
Stds Team Leader (C. L. Wright): CLW Standards Services (M. Brimhall): MMB		27 May 97	TI 403 Page 3 of 4

Table 1 – Components

Item	Qty.	Standard	Description
1	2	TD 322D	Grounding Assembly, Hardware-to-Structure Ground
2	3	TD 420_ _ C	Suspension Assembly, Conductor
3	2	TD 425_ _ C	Suspension Assembly, Shield Wire
4	1	TD 728C	Arm Assembly, Suspension, Steel Truss
5	3	TD 824E _	Insulator Assembly, Suspension, Tangent
6	6	TD 927_ A	Bolt Assembly, Machine, 7/8-Inch
7	2	TD 361Z	Grounding Clip

Table 2 – Additional Material To Be Specified To Complete This Structure

Item	Qty.	Standard	Description
A	2	TD 020_ _ A	Wood Pole Assembly
B	1 or More	TD 774A _ A A	Brace, Cross, Wood Assembly with Double Bolt Connection

Notes

1. All hardware is to be bonded when it is separated by less than 8 inches. Bond wire shall loop around the bolt.
2. Install spring washers with loop end up where possible.
3. All pole attachment hardware shall be bonded to the pole grounding assembly.

TI 432 _ _ _ _ _

RCMS Code: CU

May be used
In raptor areas

230 kV Structure—Shielded, 3-Pole—Angle, 8° to 20°

Scope

This structure is used for small to medium line angles when shielding is required.

Line Angle: 5° to 30°

Standard References

TA 181	General—Blowout and Right-of-Way Width Considerations
TC 161	*Clearances—for Conductors on the Same Support*
TD 001	*Poles—General Information*
TD 100	*Conductor—General Information*
TD 200	*Shield and Guy Wire—General Information*
TD 300	*Grounding—General Information*
TD 400	*Suspension Hardware—General Information*
TD 600	*Guys and Anchors—General Information*
TD 700	*Crossarms and Braces—General Information*
TD 800	*Insulators—General Information*
TD 900	*Bolts, Nuts, and Washers—General Information*

Conductor	Code
795 ACSR “Drake”	D
954 ACSR “Cardinal”	E
1272 ACSR “Bittern”	F
795 AAC “Arbutus”	G
1272 AAC “Narcissus”	H
None	Z

Conductor Accessories	Code
Suspension Hardware	
Armor rod	A
Line guard	B
None	Z

Shield Wire	Code
3/8 EHS	A
1/2 EHS	B
7#8 AW	C
7#6 AW	D
3/8 EHS w/AGS	E
1/2 EHS w/AGS	F
7#8 AW w/AGS	G
7#6 AW w/AGS	H
3/8 EHS w/armor rod	I
1/2 EHS w/armor rod	J
7#8 AW w/armor rod	K
7#6 AW w/armor rod	L
None	Z

Insulation	Code
Porcelain	A
Polymer	B

Pole Class	Species	Code
1	Douglas fir	C
H1	Douglas fir	D
H2	Douglas fir	E
1	Western red cedar	H
H1	Western red cedar	I
H2	Western red cedar	J

TI 432

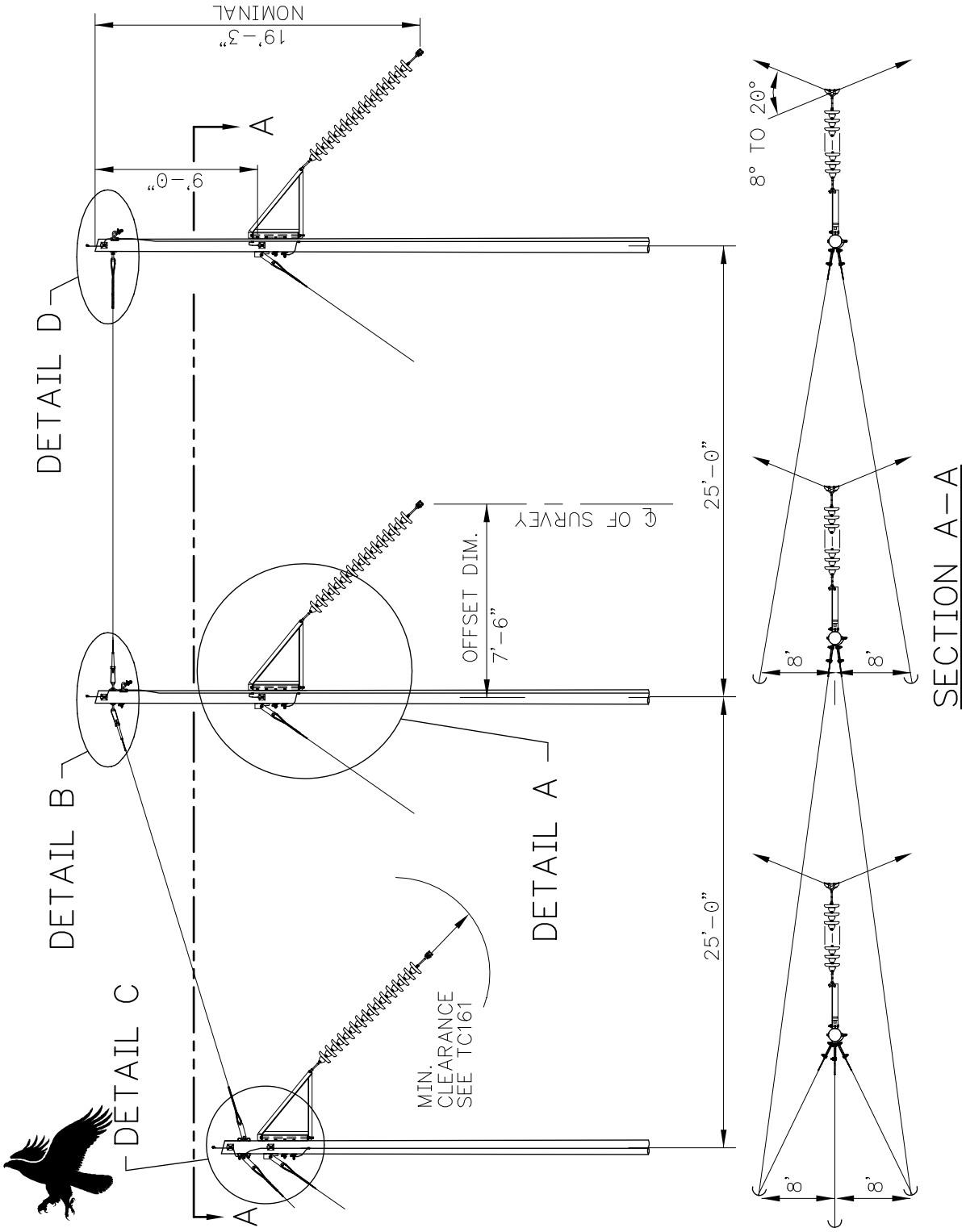

May be used
In raptor areas

PACIFICORP PACIFIC POWER UTAH POWER		**230 kV** **Structure—Shielded,** **3-Pole—Angle, 8° to 20°**	**Transmission** **Construction Standard**
TI 432 Page 2 of 4	6 Nov 00		Asset Policy Engineer (C. L. Wright): Asset Policy Manager (G. Shaw):

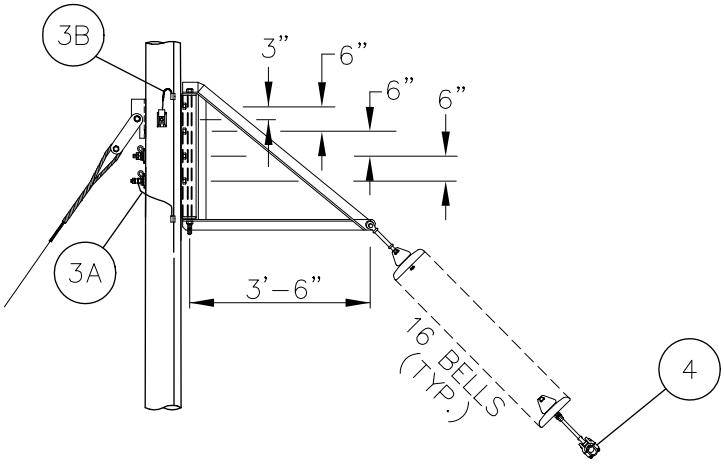

DETAIL A

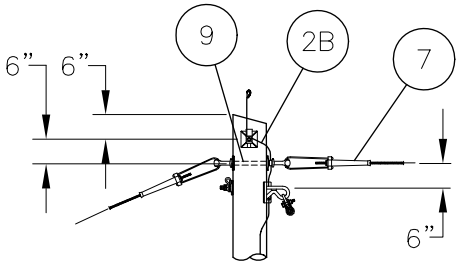

DETAIL B

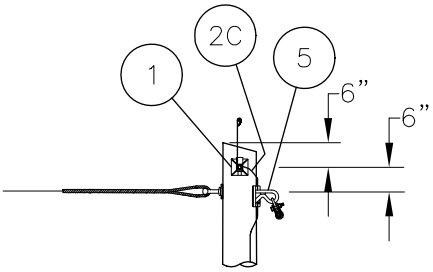

DETAIL D

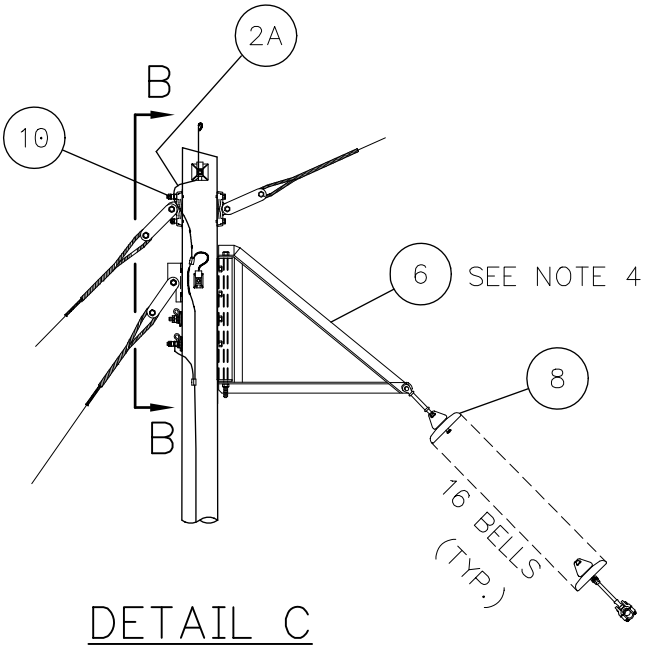

DETAIL C

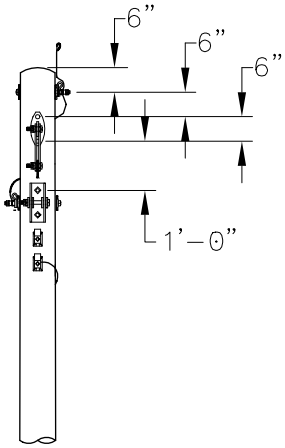

SECTION B–B

Transmission Construction Standard	230 kV Structure—Shielded, 3-Pole—Angle, 8° to 20°	PACIFICORP PACIFIC POWER UTAH POWER	
Asset Policy Engineer (C. L. Wright): CLW Asset Policy Manager (G. Shaw): GS		6 Nov 00	TI 432 Page 3 of 4

Table 1 – Components

Item	Qty.	Standard	Description
1	6	TD 022_	Pole Assembly, Split-Bolt, 3/4″ Diameter
2A	1	TD 321C E	Grounding Assembly, Hardware-to-Hardware
2B	1	TD 321C C	Grounding Assembly, Hardware-to-Hardware
2C	1	TD 321C Z	Grounding Assembly, Hardware-to-Hardware
3A	3	TD 322D	Grounding Assembly, Hardware-to-Structure Ground
3B	3	TD 322C	Grounding Assembly, Hardware-to-Structure Ground
4	3	TD 420_ _ D	Suspension Assembly, Conductor
5	2	TD 425_ _ A	Suspension Assembly, Shield Wire
6	3	TD 430E _ _	Bracket Assembly
7	1	TD 540_ F B	Tie Wire Assembly
8	3	TD 828E _	Insulator Assembly, Suspension or Strain, Y-Clevis Ball, Hot-Line
9	1	TD 921_ B	Bolt Assembly, Double-Arming, 3/4-Inch
10	2	TD 928_ D	Bolt Assembly, Machine, 1-Inch

Table 2 – Additional Material To Be Specified To Complete This Structure

Item	Qty.	Standard	Description
A	3	TD 020_ _ A	Wood Pole Assembly
B	1	TD 622_ _ _ _	Guy Assembly, Dead-End Tee Pole Attachment
C	3	TD 624_ _ _ _	Guy Assembly, 2-Bolt Splayed Channel Pole Attachment
D	AS REQ	TD 630_ _ _	Anchor Assembly

Notes

1. All hardware is to be bonded when it is separated by less than 8 inches. Bond wire shall loop around the bolt.
2. Install spring washers with loop end up where possible.
3. All pole attachment hardware shall be bonded to the pole grounding assembly.
4. See Notes section in TD 430 for installation details for attaching bracket assemblies to pole.
5. Clearance between the conductor and the structure shall be maintained under reverse wind conditions.
6. Class 1 or better pole is recommended.

TI 435 _ _ _ _ _

RCMS Code: CU

May be used
In raptor areas

230 kV Structure—Shielded, 3-Pole—Angle, 30° to 45°

Scope

This structure is used for medium line angles when shielding is required.

Line Angle: 30° to 45°

Standard References

TA 181	General—Blow-out and Right-of-Way Width Considerations
TC 161	*Clearances—for Conductors on the Same Support*
TD 001	*Poles — General Information*
TD 100	*Conductor—General Information*
TD 200	*Shield and Guy Wire—General Information*
TD 300	*Grounding—General Information*
TD 400	*Suspension Hardware—General Information*
TD 600	*Guys and Anchors—General Information*
TD 800	*Insulators—General Information*
TD 900	*Bolts, Nuts, and Washers—General Information*

Conductor	Code
795 ACSR "Drake"	D
954 ACSR "Cardinal"	E
1272 ACSR "Bittern"and 1557.4 ACSR/TW "Potomac"	F
795 AAC "Arbutus"	G
1272 AAC "Narcissus"	H
None	Z

Conductor Accessories	Code
Suspension Hardware	
Armor rod	A
Line guard	B
None	Z

Shield Wire	Code
3/8 EHS	A
1/2 EHS	B
7#8 AW	C
7#6 AW	D
3/8 EHS w/armor rod	I
1/2 EHS w/armor rod	J
7#8 AW w/armor rod	K
7#6 AW w/armor rod	L
None	Z

Insulation	Code
Porcelain	A
Polymer	B

Pole Class	Species	Code
1	Douglas fir	C
H1	Douglas fir	D
H2	Douglas fir	E
1	Western red cedar	H
H1	Western red cedar	I
H2	Western red cedar	J

© 2007 by PacifiCorp. All rights reserved.

TI 435

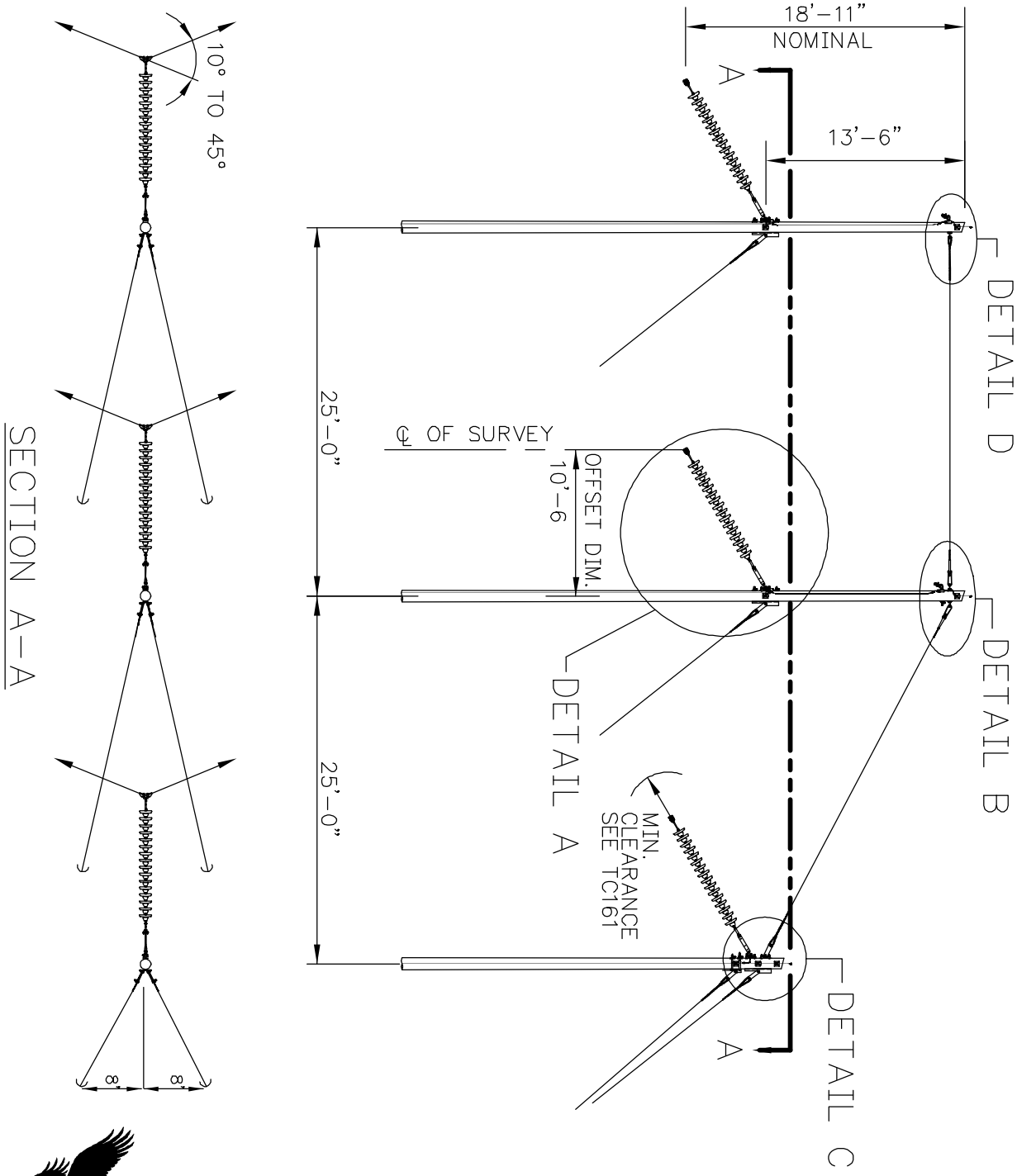

May be used
In raptor areas

PACIFICORP
A MIDAMERICAN ENERGY HOLDINGS COMPANY

TI 435
Page 2 of 4

24 Jul 07

230 kV Structure Shielded, 3-Pole Angle, 30° to 45°

Transmission Construction Standard

© 2007 by PacifiCorp. All rights reserved.

Engineer (C. Wright): CLW
Standards Manager (G. Lyons): GS

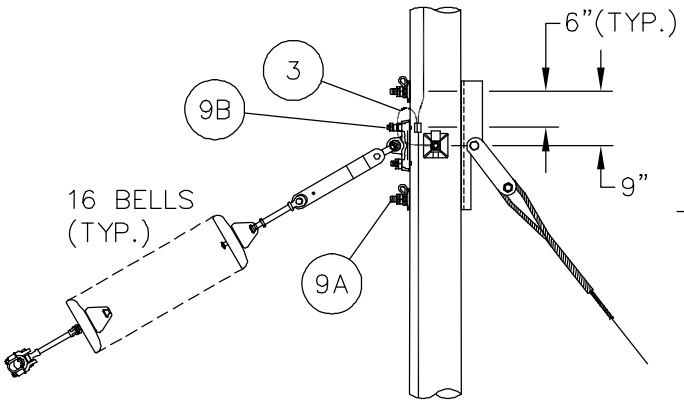

DETAIL A

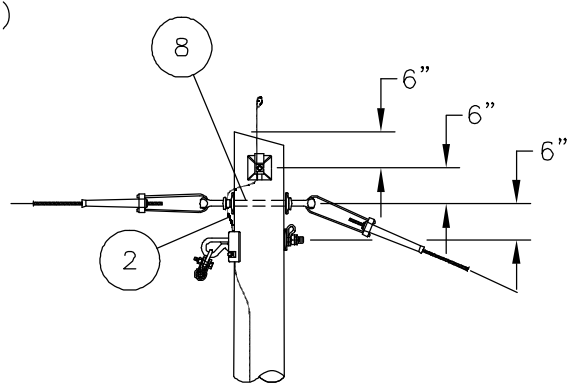

DETAIL B

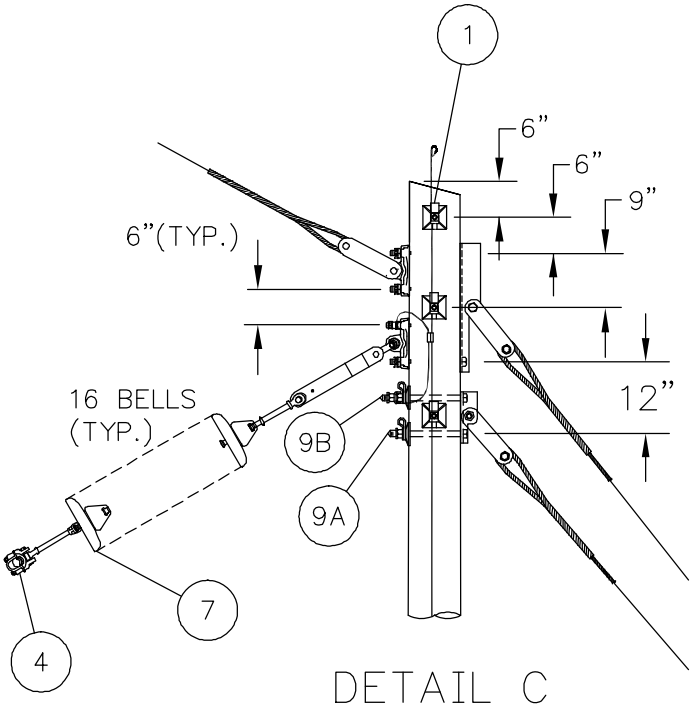

DETAIL C

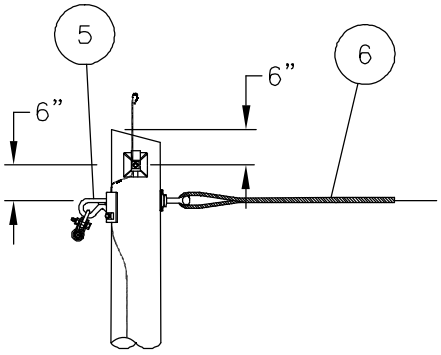

DETAIL D

Transmission Construction Standard	**230 kV Structure Shielded, 3-Pole Angle, 30° to 45°**	PACIFICORP A MIDAMERICAN ENERGY HOLDINGS COMPANY
© 2007 by PacifiCorp. All rights reserved.		24 Jul 07
Engineer (C. Wright): CLW Standards Manager (G. Lyons): GS		**TI 435** Page 3 of 4

Table 1 – Components

Item	Qty.	Standard	Description
1	7	TD 022_	Pole Assembly, Split-Bolt, 3/4″ Diameter
2	6	TD 321C E	Grounding Assembly, Hardware-to-Hardware
3	4	TD 322E	Grounding Assembly, Hardware-to-Structure Ground
4	3	TD 420_ _ E	Suspension Assembly, Conductor
5	2	TD 425_ _ B	Suspension Assembly, Shield Wire
6	1	TD 540_ F B	Tie Wire Assembly
7	3	TD 827E _ A	Insulator Assembly, Suspension, with Link and Y-Clevis-Eye
8	1	TD 921_ D	Bolt Assembly, Double-Arming, 3/4-Inch
9A	5	TD 928_ A	Bolt Assembly, Machine, 1-Inch
9B	9	TD 928_ D	Bolt Assembly, Machine, 1-Inch

Table 2 – Additional Material To Be Specified To Complete This Structure

Item	Qty.	Standard	Description
A	3	TD 020_ _ A	Wood Pole Assembly
B	3	TD 625_ _ _ _	Guy Assembly, 4-Bolt Splayed Channel Pole Attachment
C	1	TD 624_ _ _ _	Guy Assembly, 2-Bolt Splayed Channel Pole Attachment
D	AS REQ	TD 630_ _ _	Anchor Assembly

Notes

1. All hardware is to be bonded when it is separated by less than 8 inches. Bond wire shall loop around the bolt.
2. Install spring washers with loop end up where possible.
3. All pole attachment hardware shall be bonded to the pole grounding assembly.
4. Clearance between the conductor and the structure shall be maintained under reverse wind conditions.
5. Class 1 or better poles are recommended.

© 2007 by PacifiCorp. All rights reserved.

TI 451 _ _ _ _ _

RCMS Code: CU

May be used
In raptor areas

230 kV Structure—Shielded, 3-Pole—Dead-End, 10° to 65°

Scope

This structure is used for deadends with line angles up to 65° when shielding is required.

Line Angle: 10° to 65°

Standard References

TD 001	*Poles—General Information*
TD 100	*Conductor—General Information*
TD 200	*Shield and Guy Wire—General Information*
TD 300	*Grounding—General Information*
TD 500	*Tension Hardware—General Information*
TD 600	*Guys and Anchors—General Information*
TD 700	*Crossarms and Braces—General Information*
TD 800	*Insulators—General Information*
TD 900	*Bolts, Nuts, and Washers—General Information*

Conductor	Code
795 ACSR "Drake"	D
954 ACSR "Cardinal"	E
1272 ACSR "Bittern"	F
795 AAC "Arbutus"	G
1272 AAC "Narcissus"	H
None	Z

Conductor Accessories	Code
Tension Hardware Compression Fittings	
Jumper w/armor rod	C
Jumper w/o armor rod	D
Tension Hardware Bolted Fittings	
Jumper w/armor rod	E
Jumper w/o armor rod	F
None	Z

Shield Wire	Code
3/8 EHS	A
1/2 EHS	B
7#8 AW	C
7#6 AW	D
None	Z

Insulation	Code
Porcelain	A
Polymer	B

Pole Class	Species	Code
3	Douglas fir	A
2	Douglas fir	B
1	Douglas fir	C
H1	Douglas fir	D
H2	Douglas fir	E
3	Western red cedar	F
2	Western red cedar	G
1	Western red cedar	H
H1	Western red cedar	I
H2	Western red cedar	J

© 2004 by PacifiCorp. All rights reserved.

TI 451

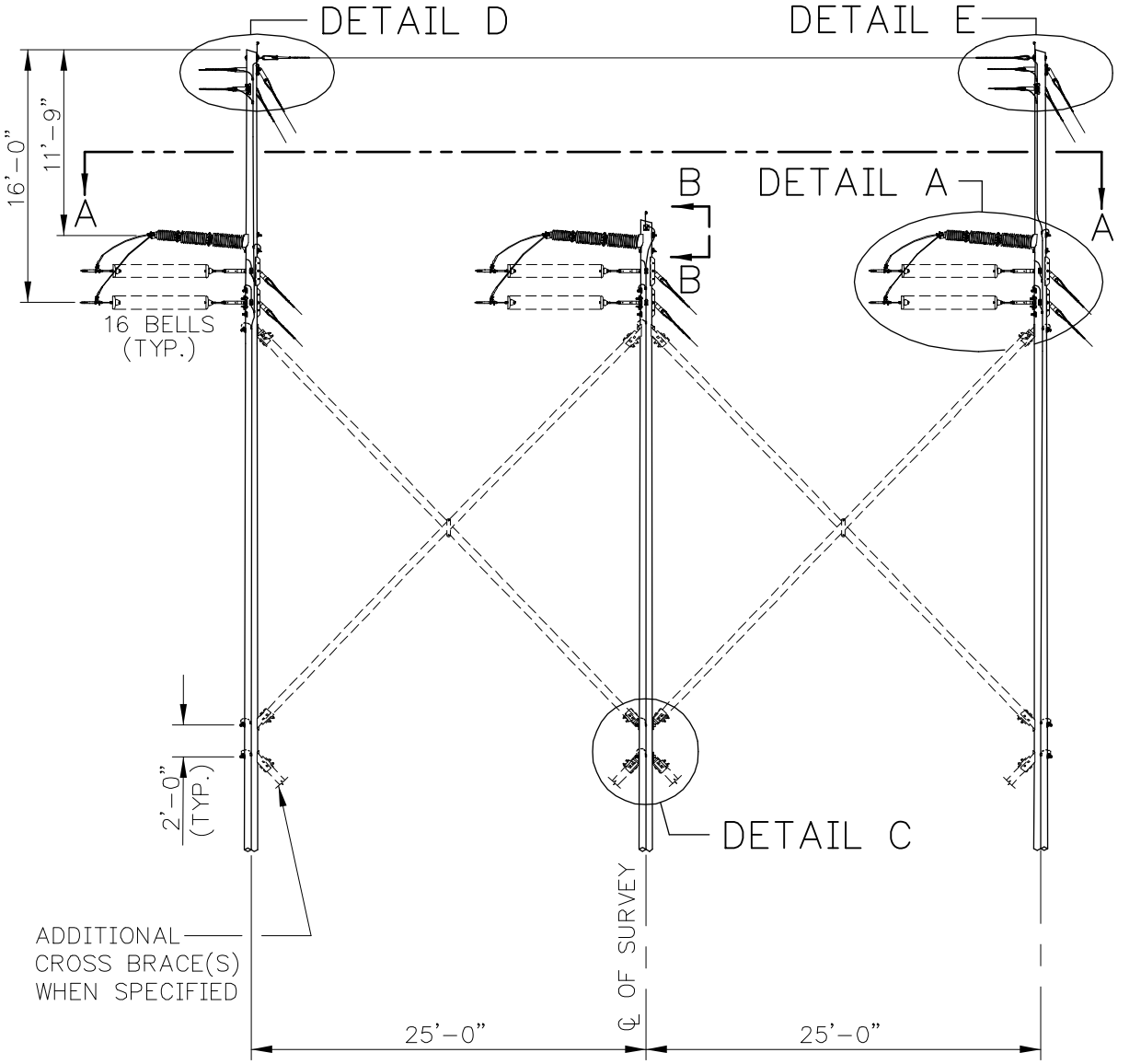

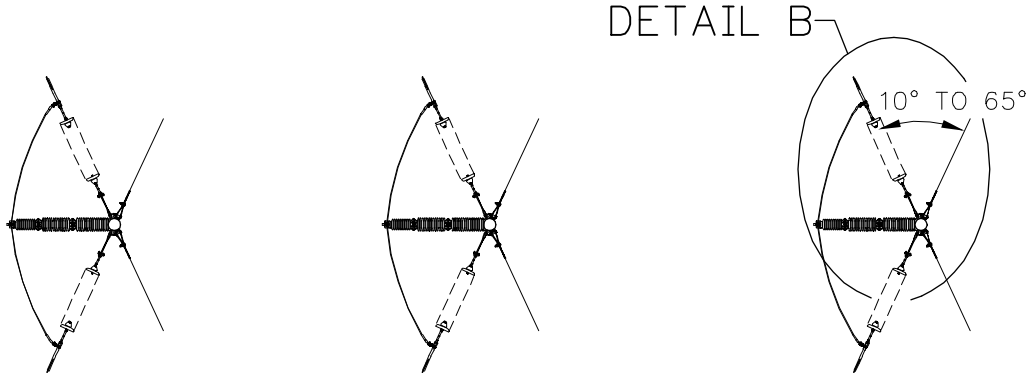

May be used
In raptor areas

SECTION A–A

PACIFICORP		230 kV Structure—Shielded, 3-Pole—Dead-End, 10° to 65°	Transmission Construction Standard
TI 451 Page 2 of 6	28 Apr 04		Engineer (C. Wright): CLW Standards Manager (G. Shaw):

© 2004 by PacifiCorp. All rights reserved.

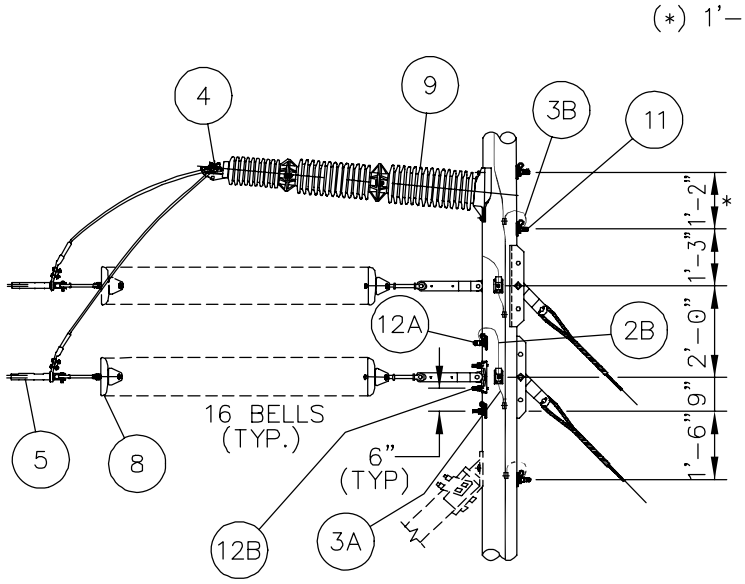

DETAIL A

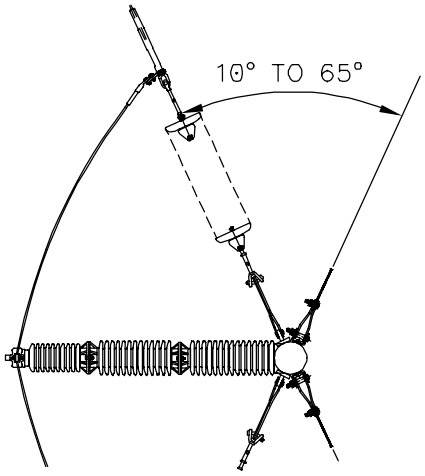

DETAIL B

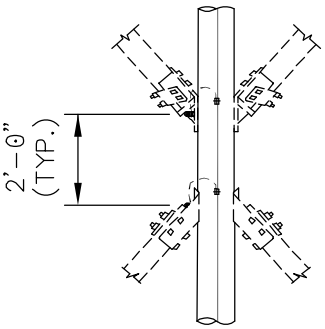

DETAIL C

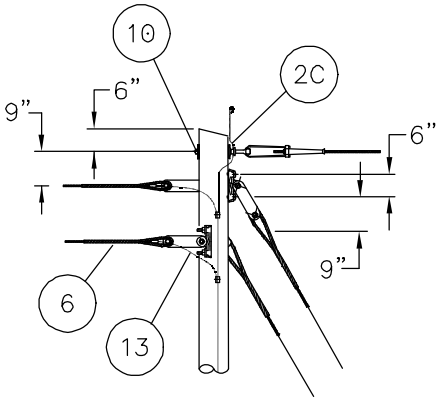

DETAIL D

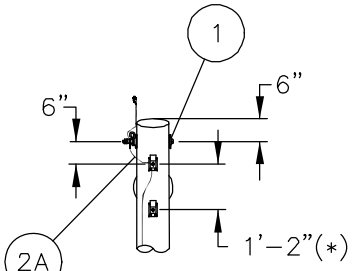

(*) 1'–0" POLYMER INSUL.

SECTION B–B

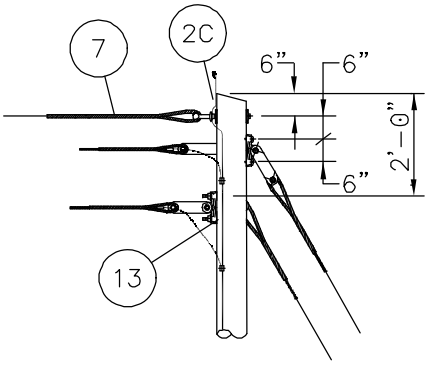

DETAIL E

Transmission Construction Standard

© 2004 by PacifiCorp. All rights reserved.

Engineer (C. Wright): CLW

Standards Manager (G. Shaw):

230 kV Structure—Shielded, 3-Pole—Dead-End, 10° to 65°

PACIFICORP

28 Apr 04

TI 451

Table 1 – Components

Item	Qty.	Standard	Description
1	7	TD 022_	Pole Assembly, Split-Bolt, 3/4″ Diameter
2A	1	TD 321C D	Grounding Assembly, Hardware-to-Hardware
2B	6	TD 321E Z	Grounding Assembly, Hardware-to-Hardware
2C	2	TD 321C Z	Grounding Assembly, Hardware-to-Hardware
3A	6	TD 322C	Grounding Assembly, Hardware-to-Structure Ground
3B	2	TD 322D	Grounding Assembly, Hardware-to-Structure Ground
4	3	TD 420_ _ A	Suspension Assembly, Conductor
5	6	TD 520_ _	Tension Assembly, Conductor
6	4	TD 525_ A	Tension Assembly, Shield Wire, Guy Grip
7	1	TD 540_ E A	Tie Wire Assembly
8	6	TD 826E _ A	Insulator Assembly, Dead-End, with 15″ Link
9	3	TD 831G	Insulator, Post, Horizontal, Polymer
9	3	TD 835F	Insulator, Post, Horizontal, Porcelain
10	2	TD 926_ F	Bolt Assembly, Machine, 3/4-Inch
11	6	TD 927_ A	Bolt Assembly, Machine, 7/8-Inch
12A	12	TD 928_ A	Bolt Assembly, Machine, 1-Inch
12B	20	TD 928_ D	Bolt Assembly, Machine, 1-Inch
13	4	TD 325_	Grounding Assembly, Shield Wire-to-Pole Ground

Table 2 – Additional Material to Be Specified to Complete this Structure

Item	Qty.	Standard	Description
A	3	TD 020_ _ A	Wood Pole Assembly
B	4	TD 622B_ _ _	Guy Assembly, Dead-End Tee Pole Attachment
C	6	TD 623_ _ _ _	Guy Assembly, 4–Bolt Channel Pole Attachment
D	6	TD 627_ _ _ _	Guy Assembly, Bent Link Attachment
E	AS REQ	TD 630_ _ _	Anchor Assembly
F	1	TD 774F_B A _	Brace, Cross, Wood Assembly with Double Bolt Connection

© 2004 by PacifiCorp. All rights reserved.

Notes

1. All hardware is to be bonded when it is separated by less than 8 inches. Bond wire shall loop around the bolt. All pole attachment hardware shall be bonded to the pole grounding assembly.
2. Install spring washers with loop end up where possible.
3. In contaminated areas, use TD 840, code “F” for post insulators.
4. Class 1 or better poles are recommended.

© 2004 by PacifiCorp. All rights reserved.

Engineer (C. Wright): CLW
Standards Manager (G. Shaw):

230 kV Structure—Shielded, 3-Pole—Dead-End, 10° to 65°

PACIFICORP

28 Apr 04

CONCRETE CAISSON SCHEDULE

STR. NO.	STRUCTURE FRAMING TYPE	A.B. CAGE UNIT WEIGHT	TOTAL NO. REQD.	CONCRETE			REINFORCING BARS		
				DIAM. D	LENGTH L	CY/ PIER	TIES (HORIZONTAL)		
							SIZE C	ANCHOR BOLT CIRCLE DIA.	TOTAL
4	TE252	5740 LBS.	1	4.5'	27'	16	#4	45"	26

VERTICAL REINFORCING BARS		
SIZE	REBAR LENGTH	TOTAL
#8	27'	4

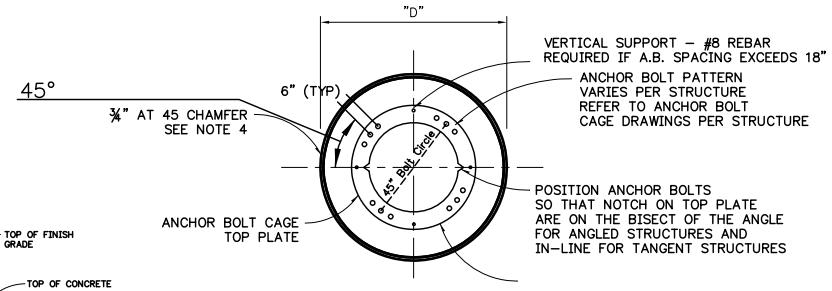

DETAIL 1: Top Plate

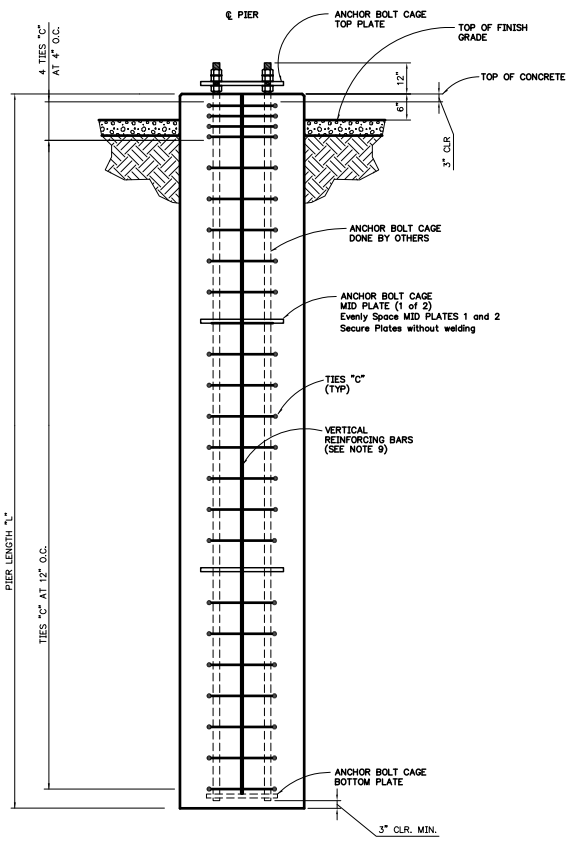

SECTION A–A
TYPICAL DRILLED PIER

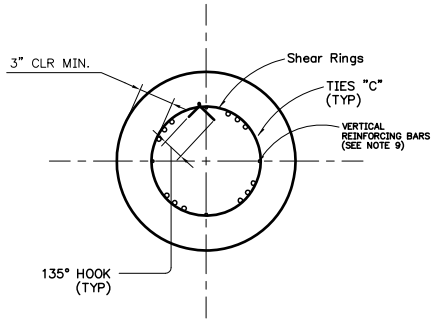

Detail 2: Rebar Reinforcement

NOTES

1. ALL CONCRETE SHALL HAVE A MINIMUM STRENGTH OF 3,500 PSI AT 28 DAYS WITH 6% ENTRAINED AIR.
2. ALL REINFORCING STEEL SHALL BE DEFORMED INTERMEDIATE GRADE NEW BILLET STEEL CONFORMING TO ASTM A615 GRADE 60.
3. TIE WIRE SHALL BE #18 GAUGE MINIMUM.
4. BEVEL ALL EXPOSED PROJECTING CORNERS OF CONCRETE WORK ¾" X ¾" UNLESS INDICATED OTHERWISE.
5. MINIMUM REINFORCING COVER SHALL BE AS FOLLOWS, UNLESS NOTED OTHERWISE:
   CONCRETE CAST AGAINST EARTH.....3"
   ALL OTHER SURFACES.....2"
6. HORIZONTAL TOLERANCE FOR ANCHOR BOLT LOCATION TO BE +/– ⅛".
7. SEE CONCRETE SPECIFICATIONS FOR DETAILED CONCRETE REQUIREMENTS.
8. ANCHOR BOLT CAGE AND STRUCTURES SUPPLIED BY SABRE TUBULAR STRUCTURES. CONTACT PERSON IS KEN TAYLOR. P.O. #4500389776
   PHONE: (817) 852–1840
9. NOTCH MIDDLE TEMPLATES TO ACCOMODATE VERTICAL REINFORCING BARS.

PROJ/ERP# 02920003	Woods Cross–Holly Oil 46kV TRANSMISSION LINE CONCRETE CAISSON SCHEDULE
PL#	
DATE 2/15/2008	
ENG ASL / DES	
DR / CH	
APPROVAL	PACIFICORP TRANSMISSION
	SCALE: N.T.S. / SHEET 1 OF 1 / REV. 0

CAD NO: CAISSON SCH. ATTOFD WRT/MASTERNONE PLOT SCALE:

No.	DATE	REVISION	BY	CHK	APP	No.	DATE	REVISION	BY	CHK	APP	DRAWING No.	REFERENCE DRAWINGS	DRAWING No.	REFERENCE DRAWINGS

BORDER REVISED 06-27-02 R.J.R.

DRILLING PROGNOSIS

Well:	**Riley Ridge #24-16**	**AFE No.:**	
Location:	SE SW Sec 16 - T29N - R114W	**Property No.:**	
County, State	Sublette Co., Wyoming	**Field:**	Madison
Surface Location:	371' FSL & 2971 FEL	**Objective:**	Nugget
Target Location:	Same	**TVD/MD:**	11460
E-Mail:		**Cementing:**	
Wellhead:		**Mud:**	
Spool:		**Rig:**	
Xmas Tree		**Offset Wells:**	
Tubing:			

Superintendent: Larry Seigrist
Engineer: Eddie Wright

Hole Size	Formation Tops	Logs	Cement	Mud Weight
17-1/2"	xx" Conductor BTW xxx' 13-3/8" @ 886'		Cemented with 975 sacks of cement and circulated to surface	
8-3/4"	**11,100' 2-7/8" 8.7# I-80 BTS-6 internally coated** TOC Estimated @ 6000' 7,005 Frontier - 1 7,496 Frontier - 2 7,762 Frontier - 3 8,088 Frontier - 4 8,262 Frontier - 5 8,460 Bear River 8,879 Duddy **DV Tool 9,000'** 9,035 Dakota 9,425 Beckwith 10,240 Stump 10,272 Pruess 10,443 Twin Creek 11,100' Production Packer 11,220 Gypsum Spring 11,310 Nugget 11,310-11,350' Potential perfs for injection 12,000' 5-1/2" 17# T-95 LTC		**Lead:** 290/330 sks (Stage 1/2) Premium Lite II Plus + 0.2% Retarder + 0.2% Fluid Loss + 0.25% Dispersant + 0.04 Static Free + 0.01 gps Foam Preventer, 11.5 ppg (20%), Yield 2.65 cuft/sk, Water 15.74 gal/sk, , TOC: 9,000'/6,000' **Tail:** 120/ 50/50 sk Class G + 0.3% Fluid Loss + 0.25% Retarder + 0.2% Dispersant + 20% Silica Sand + 0.04% Static Free + 0.01 gps Foam Preventer, 15.8 ppg (20%), Yield 1.36 cuft/sk, Water 5.64 gal/sk TOC 11,680' / 8,870'	Low Solids Non-Dispersed to Lightly Dispersed 8.4 - 9.5 ppg

Riley Ridge #20-14
Produced Waste Gas Injection Well

Maximum Pressure Calculations

Well: **Riley Ridge 20-14**
County, State Sublette Co., WY
Surface Location: 836' FSL & 2442' FEL Sec 17 T29N R114W
Wellhead: 16" 5M SOWx 16-3/4" 5M x 13-5/8" 5M x 11"5M
Tubing Head: 5-1/8" 5M side valves
Xmas Tree 11" 5M with 5-1/8" 5M bore & side valves

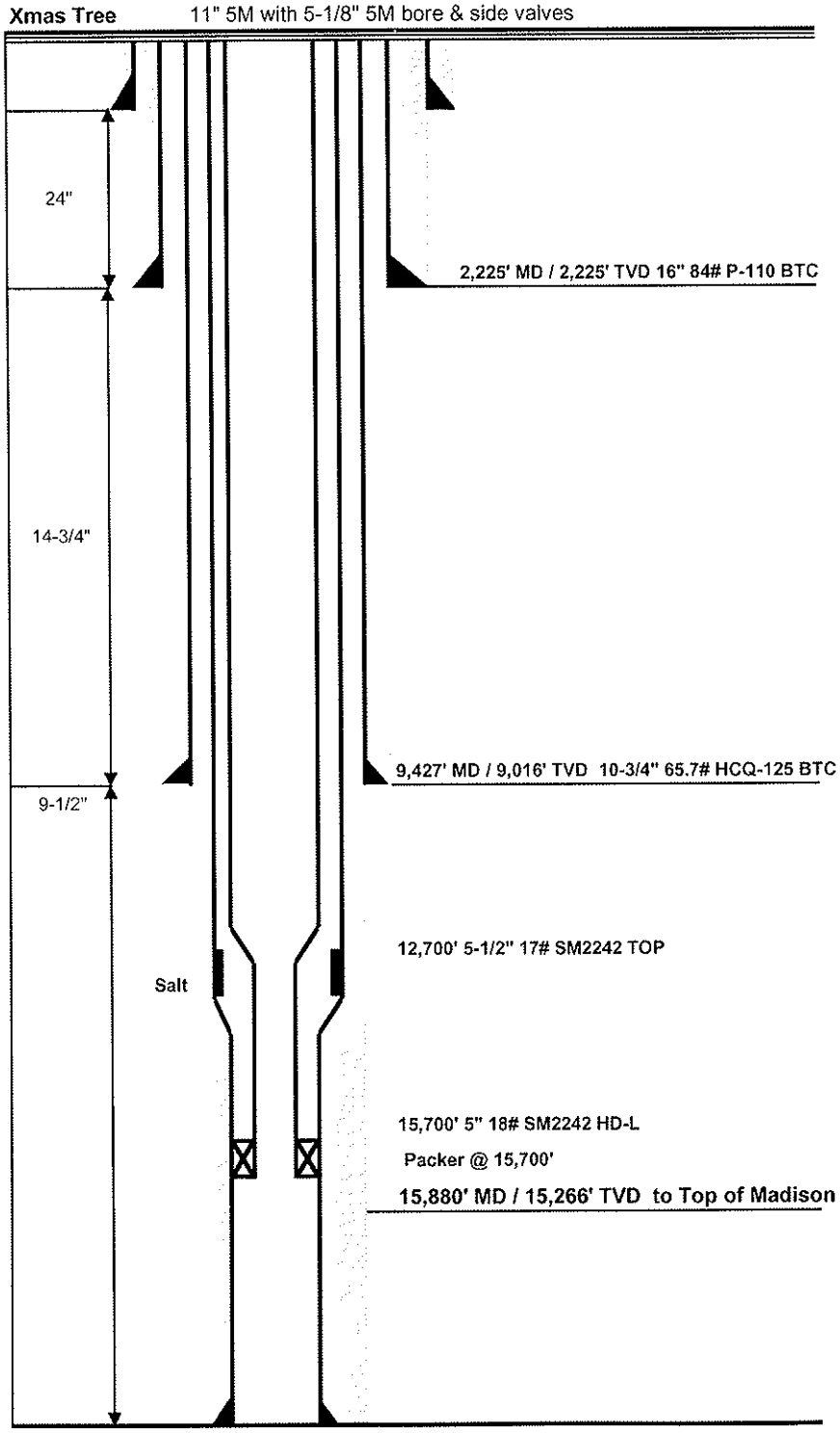

Assumptions:
Surface Injection Temperature (max) = 90 Deg F
Design Maximum Surface Pressure = 3500 psi

Injection Fluid Gradient
Based on Peng Robinson EOS - 0.423 psi/ft

Maximum Bottomhole Pressure at 3500 psi (surface)
Pbh = Psur + P Head
Phead = 0.423 psi/ft X 15266 = 6458 psi
Pbh = 3500 psi + 6458 psi = 9958 psi
Implied Gradient = 9958/15226 = 0.65 psi/ft

Estimated Frac Pressure at Top of Madison
Based on 0.85 psi/ft Fracture Gradient
= 0.85 X 15226' = 12942 psi

Therefore, max surface injection pressure of 3500 ps
is 2984 psi <u>less</u> than fracture pressure

Cause _____
Docket _____

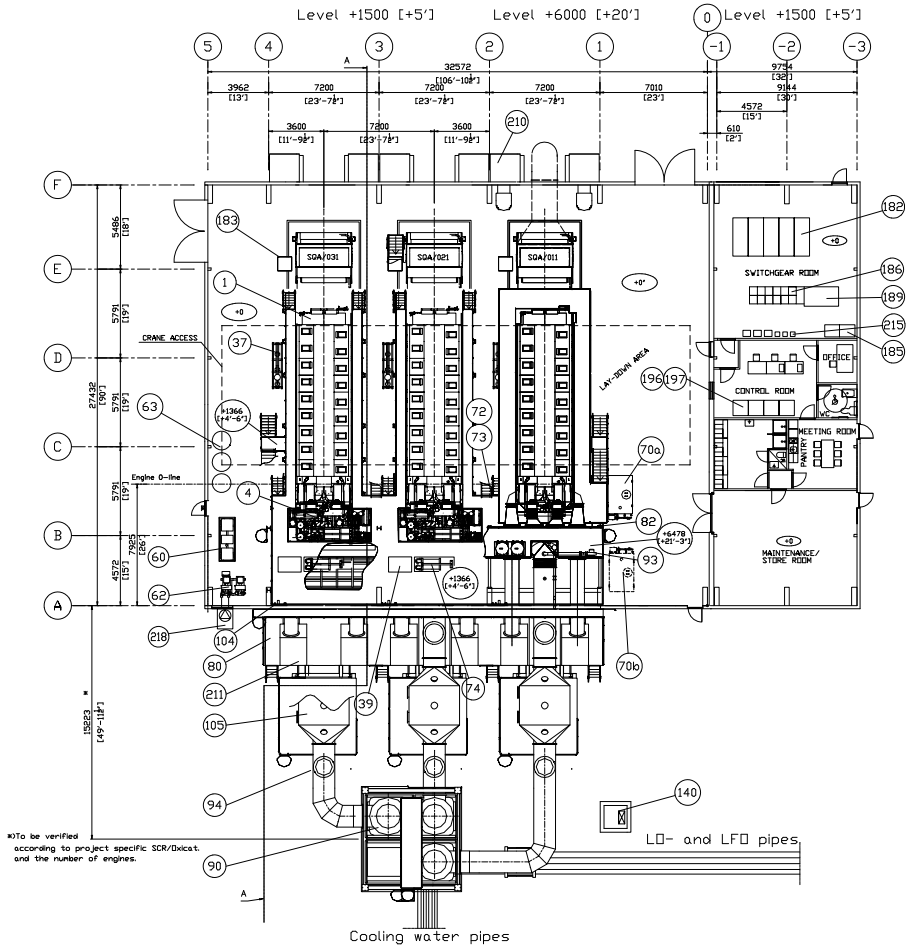

ENGINE HALL & UTILITY BLOCK

Item No	Pcs.	Code (First)	DESCRIPTION	WEIGHT/lb Incl. liquids kg	lb	MOUNTING LEVEL millim.	(Floor level) inch.
1	3	SQA	Engine generator set	363 ton	800 ton	+0.000	0'- 0"
4	3	QEA	Pipe module		-	+0.000	0'- 0"
37	3	ZBB	Gas regulating unit		-	+0.000	0'- 0"
39	3		Additional preheater (optional)		-	+0.000	0'- 0"
60	1	TCA	Working air unit		-	+0.000	0'- 0"
62	1	TSA	Starting air unit		-	+0.000	0'- 0"
63	3	TSB	Starting air bottle 3000l/793 gal		-	+0.000	0'- 0"
70a	1	VBA	Maintenance water tank 5m3/1321gal		-	+0.000	0'- 0"
70b	1	VBA	Glycol tank 5m3/1321gal (optional)		-	+0.000	0'- 0"
72	3	VEA	LT-water expansion vessel 600l/159gal		-	+6.250	20'-6"
73	3	VEA	HT-water expansion vessel 600l/159gal	glycol	(optional)	+6.250	20'-6"
74	3	VGB	Central cooler (optional)		-	+550	1-10"
80	6	NGA	Charge air filter		-	+915	3'-0"
82	3		Charge air & Exhaust gas module				
93	3	NHA	Exhaust gas ventilation unit		-	+6.250	20'-6"
104	3	YCA	Urea dosing unit (optional)		-		-
182	-	BAC	MV Switchgear		-	+0.000	0'- 0"
183	3	BAN	Neutral point cubicle		-	+0.000	0'- 0"
185	2	BEY	DC-Unit		-	+0.000	0'- 0"
186	-	BFA	LV switchboard		-	+0.000	0'- 0"
189	1	BFB	Station transformer		-	+0.000	0'- 0"
196	1	CFA	Control panel, common		-	+0.000	0'- 0"
197	3	CFC	Control panel, engine wise		-	+0.000	0'- 0"
210	6		Ventilation unit (enginehall)		-	+0.000	0'- 0"
211	3		Ventilation unit (aux. area)		-	+1.470	4'- 10"
215	6		Frequency converter		-	+0.000	0'- 0"
218	1		Ventilation unit for compressor		-	+0.000	0'- 0"

MECHANICAL UTILITY AREA

Item No	Pcs.	Code (First)	DESCRIPTION	WEIGHT/kg Incl. liquids kg	lb	MOUNTING LEVEL millim.	(Floor level) inch.
71	15	VCA	Radiator		-	-	-
90	3	NHA	Exhaust gas silencer		-	+4.470	14'-8"
94	6	NGA	Rupture disc		-	-	-
105	3		SCR/OXI-CAT (Optional)		-	+3.962	13'-0"
106	1		SCR gas analyzer (Optional)		-	+0.000	0'-0"
140	1	DAA	Oily water collecting pit		-	-	-

FOR TENDERING ONLY

WÄRTSILÄ

© Wärtsilä Finland Oy Power Plants

MASTER LAYOUT, PLAN
ENGINE HALL
18V50DF GAS POWER PLANT
3x18V50DF

Product 18V50DF | ACA | UNITS mm [in]

MADE	15.9.2003	MMy/Myllymäki	KS(X).DRG -		
CHKD	15.9.2003	KVA/Vilta-aho	SCALE 1:150	SIZE A1	Page No. 1/1
APPD	29.9.2003	MJU/Juopperi			

DRG. No. WDAAA294490 a Rev.

Proj. no.

This drawing is the property of Wärtsilä NSD Corp. and shall neither be copied, shown nor communicated to a third party without the consent of the owner.

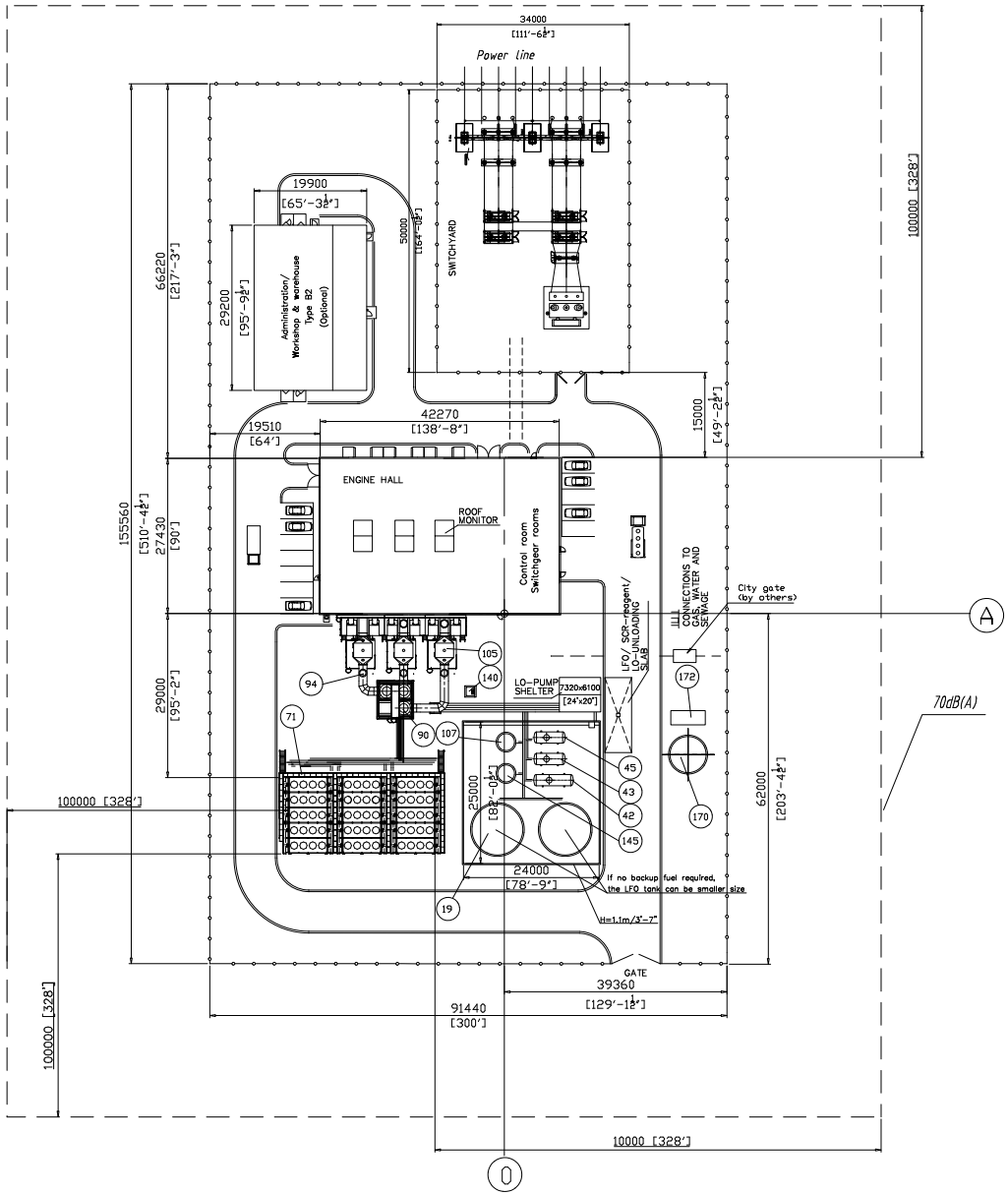

MECHANICAL UTILITY AREA							
Item No	Pcs.	Code (First)	DESCRIPTION	WEIGHT Incl. liquids kg	lb	MOUNTING LEVEL millim.	(Floor level) inch.
71	15	VCA	Radiator		-	-	-
90	3	NHA	Exhaust gas silencer		-	4470	14'-8"
94	6	NGA	Rupture disc		-	-	-
105	3		SCR/OXI-CAT (Optional)		-	3962	13'-0"
106	1		SCR gas analyzer (Optional)		-	0	0'-0"
140	1	DAA	Oily water collecting pit/separator		-	-	-
170	1	VFB	Fire / raw water tank		-	-	-
172	1		Fire fighting container		-	-	-

DAY / STORAGE TANK / UNLOADING AREA							
Item No	Pcs.	Code (First)	DESCRIPTION	WEIGHT Incl. liquids kg	lb	MOUNTING LEVEL millim.	(Floor level) inch.
19	2	PAE	LFO storage tank 500m3/132085gal		-		-
42	1	QAC	Clean LO tank 20m3/5284gal		-		-
43	1	QAD	Used LO tank 16m3/4227gal		-		-
45	1	QAM	Lube oil service tank 16m3/4227gal		-		-
107	1		SCR reagent tank 35m3/9246gal (optional)		-		-
145	1	DDB	Sludge tank 35m3/9246gal (optional)		-		-

FOR TENDERING ONLY

WÄRTSILÄ

© Wärtsilä Finland Oy
Power Plants

MASTER LAYOUT, SITE
POWER PLANT
18V50DF GAS POWER PLANT
3x18V50DF

Product 18V50DF | ACA | UNITS mm [in]

MADE	15.9.2003	MMy/Myllymäki	RSK X.DRG -			
CHKD	15.9.2003	KVA/Vilta-aho	SCALE 1:400	SIZE A1	Page No. 1/1	DRG. No. WDAAA294491
APPD	29.9.2003	MJU/Juopperi				Rev. a

Proj. no.

This drawing is the property of Wärtsilä and shall neither be copied, shown nor communicated to a third party without the consent of the owner.

Appendix C
Cimarex Wyoming Special Use Permit

ACTION: APPROVAL OF SPECIAL USE LEASE APPLICATION

AUTHORITY: W.S. 36-5-114; Rules Chapter 5, Section 3

Type of Use:	Methane and Helium Recovery Facility
Lease No.:	SU-599
Applicant:	Cimarex Energy, Inc.
County:	Sublette
Acres:	33.83
Description:	Tract in E2 Section 16, Township 29 North, Range 114 West, 6th P.M.
Improvements:	Proposed Improvements: Seven Buildings with Equipment in each building described as: Control Room/Office/Shop, Motor Control Center 1 and 2, Compressor Building, Processing Building, Sour Gas Building, Carbon Dioxide/Hydrogen Sulfide Injection Pump Building, Warehouse, Switchgear/Control Building with the Electrical Substation plus Plat Inlet facility, Propane Refrigeration System, Flare Stack, Atmospheric Storage Tanks, Cryogenic Separation Equipment, Communications Infrastructure, Various Plant Pipe Racks and Appurtenances, a Warehouse Building, Plant Security Fencing, Electrical Pole Structures, Well Flow Pipelines, etc., Water Well, Waste Facilities with an applicant estimated value of $40,000,000.00
Recommended Rental:	$19,000.00, per year adjusted annually by 2.7% to offset inflationary pressure and subject to five year rental review
Recommended Term:	September 1, 2008 to September 1, 2058 (50 Years)

Discussion:

The Rands Butte Project entails the building and installation of a Methane & Helium Recovery Facility (MHRF) which will produce methane and helium from the Madison formation in the Riley Ridge Federal Unit (RRU) and will re-inject all byproduct gasses such as carbon dioxide and hydrogen sulfide back into their source producing formation. No liquid petroleum products will be produced. No sulfur products will be produced.

This application was submitted to the Board for consideration during the June 5, 2008 Board meeting. Following testimony from the Wyoming Game and Fish Department (Game and Fish), the grazing lessee and Cimarex, the matter was deferred pending further investigation by the Office and scheduling of a field inspection by the Board.

Since the June meeting, the Board of Land Commissioners has conducted an onsite field inspection (June 16, 2008) to gather specific facts related to the proposed project. Additionally, a meeting involving Cimarex, Game and Fish and affected landowners was held on June 24, 2008 to identify and discuss specific concerns and possible solutions related to the proposed MHRF plant. Finally, a meeting was held on July 11, 2008 between Game and Fish and Cimarex to discuss the mitigation measures and possible stipulations that would be placed on the Special Use Lease should it be approved.

Recently, a Mitigation Agreement between the Game and Fish and Cimarex has been agreed upon that would provide funding for elk monitoring and research, habitat enhancement and elk damage prevention. Correspondence detailing the Agreement is attached as Exhibit A. The projects would be funded by Cimarex with funds held by a mutually agreed upon third party and administered by the Game and Fish. Additionally, lease stipulations have been agreed to that would serve to reduce /mitigate impacts associated with the facility (Exhibit B).

An analysis of the proposal including discussions regarding background, siting considerations, construction and operational impacts, potential impacts to elk winter range and income to trust beneficiaries is attached as Exhibit C.

Public / Agency Comment

Comment from the Game and Fish and the public regarding the proposed project has been received by the Office. General concerns related to the proposed MHRF can be summarized as follows:

1) Negative impacts to the Riley Ridge elk herd and potential increased threat of brucellosis transmission.
2) Air quality impacts related to ozone and Hydrogen sulfide
3) Potential water quality impacts
4) Reduction or cancellation of BLM or State grazing lease(s)

As stated earlier, the Game and Fish has approved the Mitigation Agreement and lease stipulations that would serve to reduce/mitigate impacts to the elk herd and adjacent landowners that may be affected by change in elk distribution patterns. As the plant will be essentially a zero emissions facility, negative impacts to air quality are expected to be minimal. Hydrogen sulfide gas is easily dispersed by air movement. Due to wind intensity and flow at the preferred location, dispersion of any Hydrogen sulfide, that may be accidently released, would be maximized. Cimarex is currently working with the Department of Environmental Quality to conduct an extensive analysis of air quality in the Riley Ridge area. As the gasses will be re-injected into source formation, no water quality impacts would be expected. In addition, this potential will be evaluated by the Wyoming Oil and Gas Commission prior to approval of required permits. Finally, there are no anticipated effects related to the cancellation or a reduction in AUMs of either a State or federal grazing lease resulting from the proposed plant, Mitigation Agreement or the lease stipulations.

Comments received by the Office are attached as Exhibit D.

Other permitting requirements associated with construction of the MHRP are detailed under Section E of the Detailed Analysis (attached). These permitting and regulatory compliance measures will provide the public additional opportunities for comment on the project.

It has been determined that this special use lease application site is not in a sage grouse habitat core area.

DIRECTOR'S RECOMMENDATION:

The Director provides this Board Matter for the above described Special Use Lease application for consideration with a recommendation to approve conditioned upon Cimarex compliance with provisions of the Mitigation Agreement with the Wyoming Game and Fish Department, lease stipulations designed to minimize disturbance to the Riley Ridge Elk herd and compliance with all other applicable local, state and federal regulations. Should the Board approve the application, the lease would be for a fifty year term at a rental of $19,000.00 per year adjusted annually by 2.7% to offset inflationary pressure and subject to a rental review every five years. A bond required by Cimarex Energy, Inc. equal to an Engineer's estimate for reclamation of the site until such time as it is no longer being used would be required. Approval of the application is not to be considered as an approval of the applicant's estimated value of improvements.

BOARD ACTION: Board Approved

EXHIBIT A

WYOMING GAME AND FISH DEPARTMENT

5400 Bishop Blvd. Cheyenne, WY 82006

Phone: (307) 777-4600 Fax: (307) 777-4610

Web site: http://gf.state.wy.us

GOVERNOR
DAVE FREUDENTHAL

DIRECTOR
STEVE FERRELL

COMMISSIONERS
JERRY GALLES – President
CLIFFORD KIRK – Vice President
CLARK ALLAN
FRED LINDZEY
RON LOVERCHECK
ED MIGNERY
BILL WILLIAMS, DVM

July 23, 2008

Lynn Boomgaarden, Director
Office of State Lands and Investments
122 West 35th Street, Herschler Bldg 3rd Floor West
Cheyenne, WY 82001

RE: Memorandum of Agreement for ("MOA") Wildlife Mitigation of the Riley Ridge Methane & Helium Recovery Facility

Dear Director Boomgaarden:

This letter shall summarize the understanding between Cimarex Energy Co. (Cimarex) and Wyoming Game and Fish Commission (WGFC) regarding Wildlife Mitigation measures for the construction, operation and maintenance of a natural gas sequestration plant known as the Riley Ridge Methane & Helium Recovery Facility located in T29N, R114W, Sec.16, Sublette County, Wyoming ("Facility").

WGF and Cimarex have agreed to enter into an MOA that will contain, among others, the following terms and conditions.

1. A mitigation fund in the amount of up to $1,550,000.00 will be funded by Cimarex and held by a third party as mutually agreed upon by WGFC and Cimarex.

2. The mitigation fund is intended to provide financial resources for three specific mitigation objectives to be undertaken as they relate to Cimarex's Facility which are: (i) elk damage prevention; (ii) elk monitoring/research; and, (iii) elk habitat enhancement.

3. Cimarex agrees to provide the following mitigation funds as described:

   a. Elk Monitoring/Research - not to exceed $450,000.00
   b. Habitat Enhancement - not to exceed $350,000.00
   c. Elk Damage Prevention - not to exceed $750,000.00

The total portion of the fund applicable to Elk Monitoring/Research is expected to be available in the first year of the project and maintained up to five years as needed. The portion of the fund applicable to Habitat Enhancement is expected to be maintained for up to 10 years as needed with the goal of maintaining an annual account balance up to $100,000, but in no event will the total habitat enhancement amount paid by Cimarex exceed $350,000. The portion of the fund applicable to Elk Damage Prevention is expected to be maintained for the life of the project as needed with the goal of maintaining an annual account balance of up to $50,000, but in no event will the total amount paid by Cimarex exceed $750,000 for elk damage prevention. Funds not previously disbursed within the prescribed time lines will be returned to Cimarex.

4. The geographic area covered by the Memorandum of Agreement is expected to fall into three (3) categories:

   a. Elk Monitoring and Research: The geographic area for capturing elk for monitoring and research will be the general geographic area from Middle Piney Creek (immediately north of Finnegan Feed ground) south to LaBarge Creek within the Hunt Area 94, South Piney. Elk monitoring would include the geographic areas used by radio-collared elk.

   b. Elk Habitat Enhancement: The geographic area for elk habitat enhancement will be expected to cover all occupied elk transitional and winter range in the Riley Ridge/Rand's Butte areas Hunt Area 94, South Piney. Documented movements of radio-collared elk may more closely define the area.

   c. Elk Damage: The geographic mitigation area for elk damage prevention will encompass lands that have direct surface impacts from elk displaced by the construction and operation of the Riley Ridge Facility. Such areas are expected to be South Piney and Middle Piney drainages within the geographic scope of Hunt Area 94, South Piney. However, elk damage prevention would occur wherever radio-collared elk are displaced.

Cimarex and WGF agree to finalize the MOA prior to the August 7, 2008 State Land Board Meeting and look forward to presenting the final Wildlife Mitigation plan to the Board.

Thank you in advance for your cooperation and support.

Cimarex Energy Co.

By: Michael M. Wolfe
Michael M. Wolfe, Regional Land Manager

Wyoming Game and Fish Department

By: for John Emmerich, Deputy Director

JE/cmc

EXHIBIT B

Example/Proposed Wildlife Stipulations

Pre-Construction Phase

1. Prohibit site preparation activities in designated parturition areas from May 1 to June 20.
2. Prohibit site preparation activity in designated elk crucial winter range from November 15 to April 30.
3. Maintain locked gates at private land crossings to prevent unauthorized access.
4. No possession of firearms by employees or contractors on, to, or from the site.

Construction Phase

1. Prohibit project related human activity in designated parturition areas from May 1 to June 20.
2. Prohibit project related human activity in designated elk crucial winter range from November 15 to April 30.
3. Maintain locked gates at private land crossings to prevent unauthorized access.
4. No possession of firearms by employees or contractors on, to, or from the construction site.
5. When accessing the 17-34 well site, limit motorized access to established roads.
6. Dogs (excluding guide dogs) shall be prohibited at construction site.
7. Mandatory reprimand or dismissal for employees convicted of unlawful take (hunt, pursue, catch, capture, shoot, fish, seine, trap, kill or possess, or attempt to hunt, pursue, catch, capture, shoot, fish seine, trap, kill or possess) of wildlife while employed or contracted by the company or on company property. This applies to unlawful activities that occur within the Riley Ridge Unit and main access routes to the Unit
8. Project proponent shall comply with all applicable Federal wildlife laws and regulations to eliminate/minimize potential impacts to endangered, threatened, proposed or protected species, and their habitat (i.e. Migratory Bird Treaty Act, Golden Eagle/Bald Eagle Act) determined to be present through on-site inventories conducted by the proponents during pre-construction phase.

Post-Construction/Operations Phase

1. Limit routine maintenance flaring operations from November 15 to April 30 to reduce disturbance to wintering elk
2. Limit snow plowing operations to only main road to plant/well site (17-34).

3. When accessing the 17-34 well site, limit motorized access to established road.

4. No possession of firearms by employees or contractors on, to, or from the plant site.
5. Winter road maintenance must include blading turnouts on both uphill and downhill sides of the road at one-half to one-mile intervals and at known game crossings to allow wildlife escape routes.
6. Dogs (excluding guide dogs) shall be prohibited at the plant site.
7. Mandatory reprimand or dismissal for employees convicted of unlawful take (hunt, pursue, catch, capture, shoot, fish, seine, trap, kill or possess, or attempt to hunt, pursue, catch, capture, shoot, fish seine, trap, kill or possess) of wildlife while employed or contracted by the company or on company property. This applies to unlawful activities that occur within the Riley Ridge Unit and main access route to the Unit.
8. Use best efforts to carpool or bus work crews during shift changes to reduce vehicle disturbance to wildlife.
9. Use best efforts to minimize vehicle travel between dawn (6-8 a.m.) and dusk (4-6 p.m.) during critical winter months.
10. Off-road travel shall be minimized to prevent habitat damage.
11. Use best efforts to limit routine visits to well sites on crucial winter range to times when big game are typically bedded (i.e., mid-day), to reduce disturbance and stress on wildlife.
12. Use best efforts to employ remote sensing technology to reduce daily/weekly truck trips to well sites.
13. All compressor engines/exhaust stacks shall be adequately muffled, to reduce noise levels to 49dBA; Use best and practical efforts to ensure compressor engines/exhaust stacks meet a noise level of 10 dBA (with a standard deviation of + or – 3dBA) above ambient background noise at the lease line fenced perimeter.
14. Powerlines and conductors shall be constructed in accordance with raptor-safe design criteria.
15. Project proponent is to provide information to their employees and contractors about wildlife laws and regulations, and about the sensitivity of wildlife to disturbance.
16. Garbage disposal must be strictly monitored. Open pits or landfills are prohibited and garbage collection and/or disposal must minimize bear-human conflicts. Garbage containers shall be bear-proof.
17. Project proponents shall comply with all applicable Federal wildlife laws and regulations to eliminate/minimize potential impacts to endangered, threatened, proposed, or protected species, and their habitat (i.e. Migratory Bird Treaty Act, Golden Eagle/Bald Eagle Act) determined to be present through on site inventories conducted by the proponents during pre-construction phase.

EXHIBIT C

CIMAREX ENERGY, INC.

SPECIAL USE LEASE APPLICATION

SU-599

DETAILED ANALYSIS

August 7, 2008

Prepared by the

Office of State Lands and Investments

Herschler Building, 3W

122 West 25th Street

Cheyenne, WY 82002

PROPOSAL:

Cimarex Energy has submitted a Special Use Lease application on State trust lands located in Sublette County. Termed the Rands Butte Project, the proposal entails the building and installation of a 200 MMSCFD capacity Methane & Helium Recovery Facility (MHRF) that will recover methane and helium from the Madison formation in the Riley Ridge Federal Unit (RRU) and will re-inject all byproduct gasses such as carbon dioxide and hydrogen sulfide back into their source producing formation. No liquid petroleum products or sulfur products will be produced. The plant would be owned, and operated by Cimarex Energy and would be staffed with approximately 15-20 employees for year-round operations.

AUTHORITY:

W.S. 36-5-114, Leasing for industrial, commercial and recreational purposes.

Rules: Chapter 5, Section 3.

LEGAL / LAND DESCRIPTION:

Section 16 (E2), Township 29 North, Range 114 West, 6th P.M., Sublette, County, Wyoming (see Attachment A). The preferred MHRF would occupy approximately 10 acres within a total area of 33.83 acres and would be enclosed with 10 ft. chain link fence.

The site is at an elevation of approximately 8,500 feet along Riley Ridge, an west-east trending sedimentary formation east of the Wyoming Range, in Sublette County, Wyoming approximately 17 miles west of Big Piney. It is marked by steep slopes and patches of aspen woodlands within extensive stands of Wyoming big sagebrush vegetation.

Based on ecoregion mapping compiled by the Environmental Protection Agency (EPA), the preferred plant site is generally located within the Level III Middle Rockies ecoregion, which is characterized by glaciated mountains with moderately steep to steep slopes. Deep, V-shaped drainages with moderate to high gradient perennial streams and boulder, cobble, and bedrock substrates are common. Common soil series that may be found in this area are Sapphire, Redfeather, Tongue River, Starley, Farlow, Nathrop, Starman, and Turnerville. These shallow to moderately deep, well-drained soils are indicative of the rolling to steep topography in the area. Geologic conditions, combined with the parent materials, have produced variable soil textures and very complex soil/landform relationships.

Vegetation communities in the preferred plant site are dominated by sagebrush. The Wyoming big sagebrush vegetation community is characterized by a mosaic distribution of sagebrush stands ranging from moderate density to high density. Other shrub species that occur within the sagebrush community include rabbitbrush (Chrysothamnus spp.), winterfat (Krascheninnikovia lanata), Gardner's saltbush (Artiplex gardneri), and occasionally black greasewood (Sarcobatus vermiculatus). Mountain big sagebrush (A. t. ssp. vaseyana) and silver sagebrush (A. cana) also occur in or near the preferred plant site and are interspersed with the mixed conifer, aspen, and lodgepole pine forests. Mixed conifer forest, which consists mainly of Engelmann spruce (Picea engelmanii) and subalpine fir (Abies lasiocarpa), and lodgepole pine (Pinus contorta) can also occur in the area.

The Wyoming big sagebrush community provides forage for livestock and big game, and nesting cover and forage for sage-grouse and some big game species, depending on elevation and density. The site is not located within a defined sage grouse core area. There are no known threatened or endangered plant species at this elevation or on Riley Ridge in general.

BACKGROUND:

The Special Use Lease application for the MHRF facility was received by the Office in January of 2008. The Project was presented to the Board of Land Commissioners for consideration at the June 5, 2008 Board meeting. Testifying on the matter were representatives of Cimarex Energy, the Wyoming Game and Fish Department (WGFD) and the current grazing lessee.

The primary issues of concern raised during the meeting were 1) the current preferred plant location, 2) potential negative impacts to the Piney Elk herd and 3) potential economic loss to trust beneficiaries.

No action was taken by the Board pending further review of the proposal.

EXISTING LEASES / RIGHTS OF WAY:

The current grazing lessee is Dan H. Budd and Sons (#3-6884). The lease expires on March 1, 2017. True Oil, LLC currently has two gas wells in the section. Both wells are located south of the preferred MHRF and outside of the subject area. To date, there are no current rights of way (ROW) of record on the parcel.

PROPOSED IMPROVEMENTS:

The proposed MHRF will consist of the following buildings and equipment; control room/office/shop, motor control center 1 and 2, compressor building, processing building, sour gas building, Carbon Dioxide/Hydrogen Sulfide injection pump building, warehouse, switchgear/control building with the electrical substation plus plat inlet facility, propane refrigeration system, flare stack, atmospheric storage tanks, cryogenic separation equipment, communications infrastructure, various plant pipe racks and appurtenances, a warehouse building, plant security fencing, electrical pole structures, well flow pipelines, water well, and waste facilities. The applicant estimates the value of improvements to be approximately $40,000,000.00

DISCUSSION POINTS:

A) Siting Considerations

During early Project development, several options for Project location were reviewed. The primary and most critical consideration for all location reviews was employee and public health and safety and using the natural wind normally present. Preservation of the view shed of the Piney Creek drainages and their historic western character along with preservation of the view shed of the Lander Cutoff of the Oregon Trail were also highly important. Reduction of human

activities and surface disturbance along with minimizing impact on wildlife were important considerations as well.

The Project will not require construction of new roads. Reduction of human and truck traffic and the use of multi-well pad drilling were key principals in location selection and review.

The following detail discusses salient points regarding the locations reviewed by Cimarex Energy:

1. Location of MHRF at a lower elevation in the general Riley Ridge area on private fee or state lands outside the Riley Ridge Federal Unit (Attachment B, sites A, B and C).

   These locations were rejected for the following reasons:

   a. Wind velocity and turbulent mixing were judged to be somewhat less effective in the lower elevation, more open environment.
   b. Public surface occupancy is considerably closer to this location than the Cimarex preferred alternative raising the potential for safety concerns.
   c. The location would be near open, flowing springs and well established traditional agricultural uses on the private fee property.

2. Location of the MHRF on State land (Attachment B, sites D,E,F and preferred site location).

   Cimarex considered a total of four possible alternative locations for the MHRF on State lands in Section 16, T29N, R114W. In addition to the current preferred site, the following locations were considered:

   i. Site D: Located in Section 16, T29N, R114W generally north of current preferred site.
   ii. Site E: Located in Section 16, T29N, R114W generally northeast of current preferred site and west of Well RRU 10-14.
   iii. Site F: Located in Section 16, T29N, R114W generally south of current preferred site.

   After considering all options and potential issues, the current site was selected as the Cimarex preferred location for the MHRF.

   The other three locations (D, E and F) were rejected for location of the MHRF for the following reasons:

   a. Wind velocity and turbulent mixing were judged to be slightly less effective in the more open environment.
   b. Public surface occupancies are slightly closer to these locations as opposed to the Cimarex preferred alternative (16-D).
   c. In consultation with the state grazing lessee, the plant site was located in an area to account for minimal impact to AUM's and cattle distribution.

d. This location would require development of a new and/or upgraded road system to improve access. This would result in increased disturbance and potential public demand for access.
e. The location would be near open, flowing springs and well established traditional agricultural uses on the private Fee property in 2 of the 3 rejected locations.

3. Location of the MHRF to serve the RRU and operated as a third party processing facility (Attachment B, sites G, H and I).

Cimarex considered building the Facility outside the RRU as a third party processing facility. Any third party processing facility would have been problematic due to issues related to transfer metering, ownership and liability associated with moving fluids across unit and lease boundaries. Three primary options for a third-party MHRF co-located on non-federal land northeast of the RRU were considered.

i. Location H on private Fee lands
ii. Location I on private Fee lands
iii. Location G on State of Wyoming lands

These locations are at lower elevation in the Piney Creek drainage and on existing developed road infrastructure.

The above three locations (G, H, and I) were rejected for location of the MHRF for the following reasons:

a. The producing wells on the RRU would be some 5 to 8 miles away and across flowing streams. This exposes the public to more miles of sour gas gathering flow lines installed at lower elevations close to public use and occupancy with potentially increased risk to public health and safety compared to the Cimarex preferred alternative in the unlikely event of an accidental leak or release.
b. This location could potentially result in increased environmental disturbance to wildlife habitats and existing agricultural land uses.
c. All facilities, as well as the production flow lines and their reclaimed ROW would be more visible from the Lander Cutoff of the Oregon Trail than in other locations.
d. Wind velocity and turbulent mixing were judged to be slightly less effective in the more open environment.
e. Public surface occupancies are closer to these locations as opposed to the Cimarex preferred alternative.
f. The sour gas gathering flow lines from the producing wells to the MHRF would cross several public roads thence exposing the travelling public to increased risk in the event of a flow line leak

4. Location of the MHRF on BLM land outside the boundaries of the RRU to serve the RRU (Attachment B, site J).

Cimarex considered an option presented at a meeting with WGFD that would have located the MHRF on BLM land approximately 2 to 3 miles south and/or southeast on lower Reed Ridge or lower Trail Ridge.

This location was rejected for the following reasons:

a. The producing wells on the RRU would be several miles away from the MHRF. This location would require the construction and continued operation of longer production flow lines through a difficult pipeline construction topography, high gradient environment from the wells on the RRU to the MHRF. This exposes the public to more flow line miles of sour gas gathering flow lines installed at lower elevations and crossing natural air channels (deep valleys) close to public use and occupancy with potentially increased risk to public health and safety compared to the Cimarex preferred alternative in the unlikely event of an accidental leak or release.
b. Construction of the production flow lines will disturb more surface in this option and could increase the potential for ongoing surface damage due to erosion of the ROW's due to the steep gradients involved along the route(s).
c. The need for winter access to the entire Project area including flow line ROW's is not decreased. Periodic human intrusion on wildlife winter range may be increased due to the length of such ROW with possible increased impact to wildlife on winter range.
d. Increased human disturbance in big game crucial winter range due to the need for periodic monitoring access along the increased length of flow line ROW; monitoring of the Multi-Well pad envisioned for the RRU 17-34 site and for access to the RRU 10-14. Winter access to the RRU 17-34 site in the absence of an opened road to the MHRF located per the Cimarex preferred alternative will likely involve use of heavy equipment on at least a periodic basis to ensure access.
e. This option increases the overall human disturbance and project footprint. Human presence on Riley Ridge is lowered but is still required. Increased surface disturbance occurs and human presence is dispersed over a larger area than other options.
f. If used, a successful deployment of remote monitoring technology for the producing wells will still require periodic human presence for verification, calibration and maintenance.
g. Human presence on Reed Ridge and Trail Ridge is potentially increased thus dispersing activity across the landscape within new areas considered to be within big game crucial winter range.
h. Relocation of the MHRF to this location appears to have potential affect on BLM sensitive fish species due to MHRF location on the upper Beaver Creek drainage.
i. There are complex BLM administrative policies for the use and management of non-unitized lands used in servicing the RRU gas. There is no assurance that such policies can be successfully modified to ensure Cimarex comparable access to their RRU resources.
j. If the MHRF is located outside the unit boundaries, additional facilities and surface footprint is required for transfer metering and associated preprocessing.
k. The MHRF could possibly be visible from the historic Lander Cutoff of the Oregon Trail due to construction of the facility on north-eastern and eastern facing slopes.
l. To protect the RRU from drainage; preserve the BLM mineral interest and royalty from RRU production and preserve the State's royalty interest intact, the project wells will need to remain located as currently planned in the Rand's Butte Project.
m. Disposal of produced water would be difficult if the plant site is not located within the unit boundaries and absent a good Nugget formation test.

n. State of Wyoming and other RRU owners would sustain a dilution in their ownership interests in the RRU if the facility was moved to another location off RRU with subsequent loss of royalty revenue to the State and the School Trust Fund.
o. The State of Wyoming and the Common School Permanent Land Income Fund would lose rental payments if the MHRF or other parts of the project were moved off the preferred location on State lands.

The WGFD has also indicated that alternative sites would require an evaluation of feasibility and possible impacts to other wildlife values in the area including:

- Colorado River Cutthroat (CRC) Trout habitat associated with Beaver Creek and Trail Ridge Creek.
- Given the sensitive nature of habitat for CRC trout along Beaver Creek, the Bureau of Land Management (BLM) designated this area as an Area of Critical Environmental Concern (ACEC).
- Potential Canadian Lynx habitat is mapped for many of the Conifer/Aspen stands along the ridge tops to the west and southwest of the proposed plant site.

B) CONSTRUCTION AND OPERATIONAL IMPACTS:

The Plant site as previously indicated will cover/disturb 33.83 acres and is the only new disturbance within the RRU which covers 9,780 acres. The Unit is designated by the red crosshatched area and extends to the North of the map perimeter (see attachment C). Two existing well sites will be utilized as indicated by the green boxes (10-14 well site and 17-34 well site). Regardless of the plant site location both these well sites will exist and be accessed over the life of the project. Access to these well sites and the preferred plant site is by way of an existing road shown "roughly" by the dark green line, and again, will be utilized over the life of the project.

The facility is designed to have a capacity of 200 MMSCFD. Processing capacity at start up would only be 100 MMSCFD. The limiting factor will likely be the production capacity of the two producing wells. The drilling of two additional wells and the installation of additional electrically compressors will allow the full capacity to be utilized.

Construction of substantial portions of the MHRF will be performed off-site in fabrication shops in Midland, Texas and Pocatello, Idaho. The modular components would be transported to the plant site and assembled. The plant site will be tiered to follow the natural contour of the site and minimize the amount of surface disturbance.

All aboveground MHRF components would be painted a BLM-accepted environmental color that blends with the surrounding landscape, except for structures that require hot or cold insulation and subsequent metal cover and structures that require safety coloration to comply with Occupational Safety and Health Administration (OSHA) regulations.

Specific design features have been selected to minimize the visibility of the MHRF and to lower the visual profile of the facility. The facility as currently proposed should not be visible from the Lander Cutoff of the Oregon Trail. Some of the taller equipment may be visible from certain areas distant to the facility but designs have been selected to lower visual impact. Aircraft warning lights should not be required on the facility permanent structures

A new electrical substation will be constructed at the site along with major processing equipment and related piping. Construction would involve normal oil and gas construction equipment including cranes, welding machines, forklifts, graders and other equipment required by the contractor.

Summary of anticipated surface activity for the proposed MHRF:

Pre-construction Phase:

Activity on the State lands prior to construction would entail individual site visits by Cimarex employees and contractors to do tasks such as surveys, soil samples, water samples air monitoring etc. and meeting with applicable regulatory agencies. No disturbance of the surface would take place and no heavy equipment would be traveling on to the "State site" (other than the existing road access for the drilling of unit wells to the west of the State section).

Construction Phase:

Construction of the MHRF would take place following approval of the State Lease as well as all other agency approvals (BLM, Wyoming DEQ etc.) The total time required to complete all components of the project is estimated to be approximately 28 months. The majority of the outside construction will likely be completed during a single construction season (May-November). A work crew of 50 to 150 may be present on the construction site during certain periods and will require 200-400 heavy truck loads depending of the phase of the construction. Construction period will take into account and will be limited by seasonal stipulations.

Post- Construction Phase:

The MHRF will be operated 24 hours per day, 365 days per year and maintained by a total staff of approximately 15-20. This total staff would not likely all be on site at any one time. Typical staffing may be as low as two during the night shift and 8-10 during the day. The personnel would travel from local communities to the plant site daily. Snow control structures and snow removal programs will be required for winter access

Cimarex will make efforts to "car pool" personnel when applicable.

Due to design of the project, with CRA flowlines eliminating chemical injection and where metering and flow control of the wells is handled at the plant site, access to the multi-well pad (the 17-34 site) will be much less than is typical. This will further decrease human presence on the ridge, particularly in the more sensitive areas to the west.

C) POTENTIAL IMPACTS TO CRUCIAL ELK WINTER RANGE

The Cimarex MHRF in the Riley Ridge area (Section 16,T29N, R114W) is located along the Wyoming Range Front, and includes crucial winter range for a free-ranging elk herd segment in Sublette County. The Riley Ridge area is one of two native elk winter ranges remaining in the entire Piney Elk Herd unit. Mid-winter surveys conducted by the WGFD for the past 3 years indicate on average, 198 elk have used this winter range complex (approximately 50% of the elk in Hunt Area 94 that winter on native range). Attachment C depicts results of a study conducted

as a University of Wyoming Cooperative Wildlife Unit master's project (2000-2002). The study monitored elk distribution for three consecutive winters and shows elk use on Section 16 and the surrounding area. Winter use is significant around the proposed plant location (Section 16,T29N, R114W).

If development activity displaced these elk from native winter range and elk sought forage from nearby private lands, the WGFD would be forced to either haze the animals from the conflict areas or establish emergency feeding operations. Personnel costs to haze animals from conflict areas would be highly variable and difficult to project. However, emergency feeding costs could be estimated based on data from the WGFD elk feedground program. Operational costs for the closest elk feedground to the Riley Ridge area averaged $132 per elk over the last 5 years. Projecting displacement of 50 to 100% of the Riley Ridge elk to an emergency feeding operation, annual cost could range from $13,200 to $26,400. The WGFD estimates the economic return per elk harvested is $1,527. Annually, sportsmen in elk Hunt Area 94 record a 30% success rate during the hunting season. Based on the past 3 year average of ~ 200 elk wintering in the Riley Ridge complex, and a harvest of 50 to 60 elk, the economic return to the state totals between $80,000 and $90,000, annually.

D) INCOME TO TRUST BENEFICIARIES

Should the plant be constructed, the following revenues could be anticipated by the state;

1) Special Use Lease

Pursuant to Chapter 5, section 7 of the Rules and Regulations of the Board of Land Commissioners, the annual rental for a special Use Lease shall be the amount bid by the applicant, if accepted by the Board, or as set by the Board as part of its decision in a case of conflicting applications. The minimum annual rental shall be based on fair market value for the same or similar use of the land and any improvements owned by the State after an economic analysis is made. In cases where annual rental cannot be established based on fair market value for the same or similar use of the land, the minimum rental shall not be less than $250.00 or 51/2% of the appraised land value and any improvements owned by the State.

A staff appraiser completed an evaluation of the lease application in February of 2008. Based upon comparables of similar land use in the area, the appraiser recommended that the rental rate be established at $19,000 annually. This rate would be adjusted annually by 2.7% to offset inflationary pressure and subject to five year rental review. The recommended term of the lease is 50 years.

2) Royalty Income

Within the Riley Ridge Unit, there are 640 acres of State land, 40 acres of fee land and 9,100 acres of federal lands. The location of the plant within the unit on either state, federal or fee lands would have no affect on the gas royalties received by the State. The State's share of the unit production is 6.54341% on Methane and Helium sales following production and processing. The State would also receive 50% of the royalties generated from methane production on the federal lands. The State would not realize revenue from Helium produced from federal lands.

Based upon projected plant production of 620 bcf and current Methane pricing, the State could expect approximately $32.1MM over the life of the plant should it be installed. Additionally, Helium production is estimated to be 17 bcf and would generate estimated revenues of $8.5MM over the expected plant life.

E) REGULATORY PERMITTING SUMMARY

Below is a summary and status of permits required for the proposed MHRF plant:

1. BLM Permit for Power Line and Pipeline corridor and associated actions
    a. Scoping document for preparation of a Environmental Assessment has been prepared and submitted
        i. Scoping document includes reference to MHRF as well as the proposed wells and associated actions (including a third party operated Helium recovery facility located at Calpet Road and HWY 189)
2. APD for the drilling of the 20-14 well in the Riley Ridge Unit
    a. Application submitted in April, anticipate approval in July 2008
    b. Application has already been made with the Wyoming OGCC for this well
3. DEQ Air Emissions permit
    a. This is associated with the any emissions from the MHRF
    b. Application has been made and approval anticipated this summer via a public hearing
4. DEQ Construction permit, timing unknown
5. Wyoming OGCC permit for CO2 and H2S injection well
    a. Permit will be applied for once the 20-14 well is drilled and applicable well information is obtained; approval anticipated in late '08 or early '09
6. Wyoming OGCC permit for the drilling of a Unit Water Injection well to be located on State Section 16 T114N-R29W
    a. Two permits are required, 1 for drilling and a UIC permit; application to be made in summer of '09
7. Local Construction Permit from Sublette County/Big Piney for the construction of the MHRF; subject to approval of BLM EA application, application could be as early as late '08
8. Water well permit from the State of Wyoming, Office of the State Engineer; anticipated application to be made in summer of '09
9. Eventually 3 more well permits will be applied for with the Wyoming OGCC and the BLM (APD's) all of which are to be dilled from the same existing pad.; will submit APD's in June of '08, approval subject to BLM EA (note wells have already received approval from Resource Management group of BLM under an existing Plan of Development)

F) PUBLIC COMMENT

Comment regarding the proposed project was invited in either written or electronic format from adjacent landowners and other who expressed interest. Comments can generally be summarized as follows:

1) Negative impacts to the Riley Ridge elk herd and potential increased threat of brucellosis transmission.

    The Game and Fish and Cimarex have settled on language for a Mitigation Agreement

and lease stipulations that would serve to reduce/mitigate impacts to the elk herd and adjacent landowners that may be affected by change in elk patterns.

2) Air quality impacts related to ozone and Hydrogen sulfide

   As the plant will be essentially a zero emissions facility, negative impacts to air quality are expected to be minimal. Hydrogen sulfide gas is easily dispersed by air movement. The preferred location would maximize dispersion of any Hydrogen sulfide that may be accidently released due to wind intensity and flow. Cimarex is currently working with the Department of Environmental Quality to conduct an extensive analysis of air quality in the Riley Ridge area.

3) Potential water quality impacts

   As the waste gasses will be re-injected into source formation, no water quality impacts would be expected. In addition, this potential will be evaluated by the Wyoming Oil and Gas Commission prior to approval of required permits.

4) Reduction or cancellation of BLM or State grazing lease(s)

   There are no anticipated reductions in either AUMs or cancellation of lease agreements, whether Federal or State, associated with the proposed MHRF plant.

ATTACHMENT A

N

Cimarex Riley Ridge Site
Sec 16 T29N, R114W

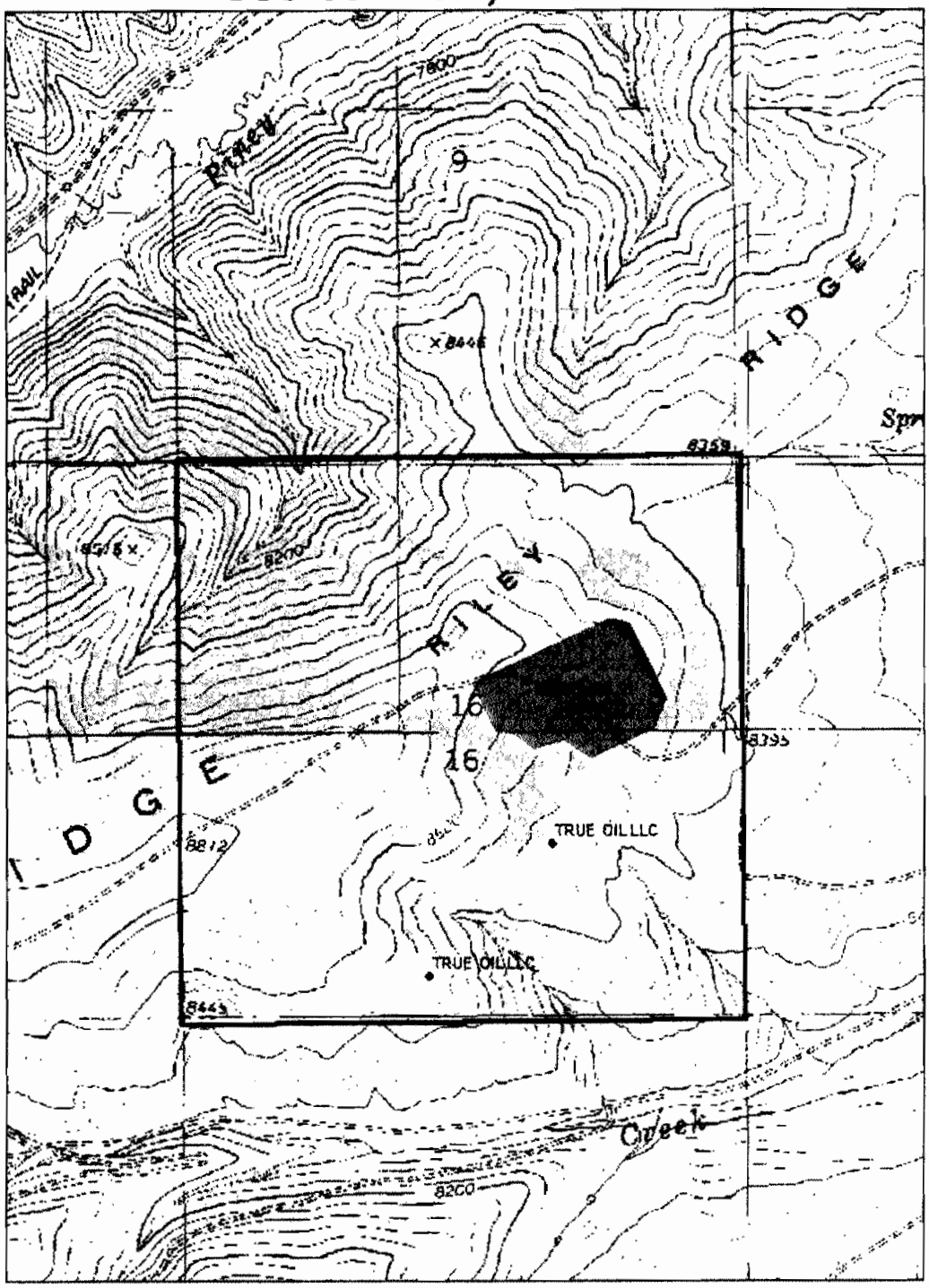

1 inch equals 0.25 miles

Rands Butte Siting Considerations

ATTACHMENT B

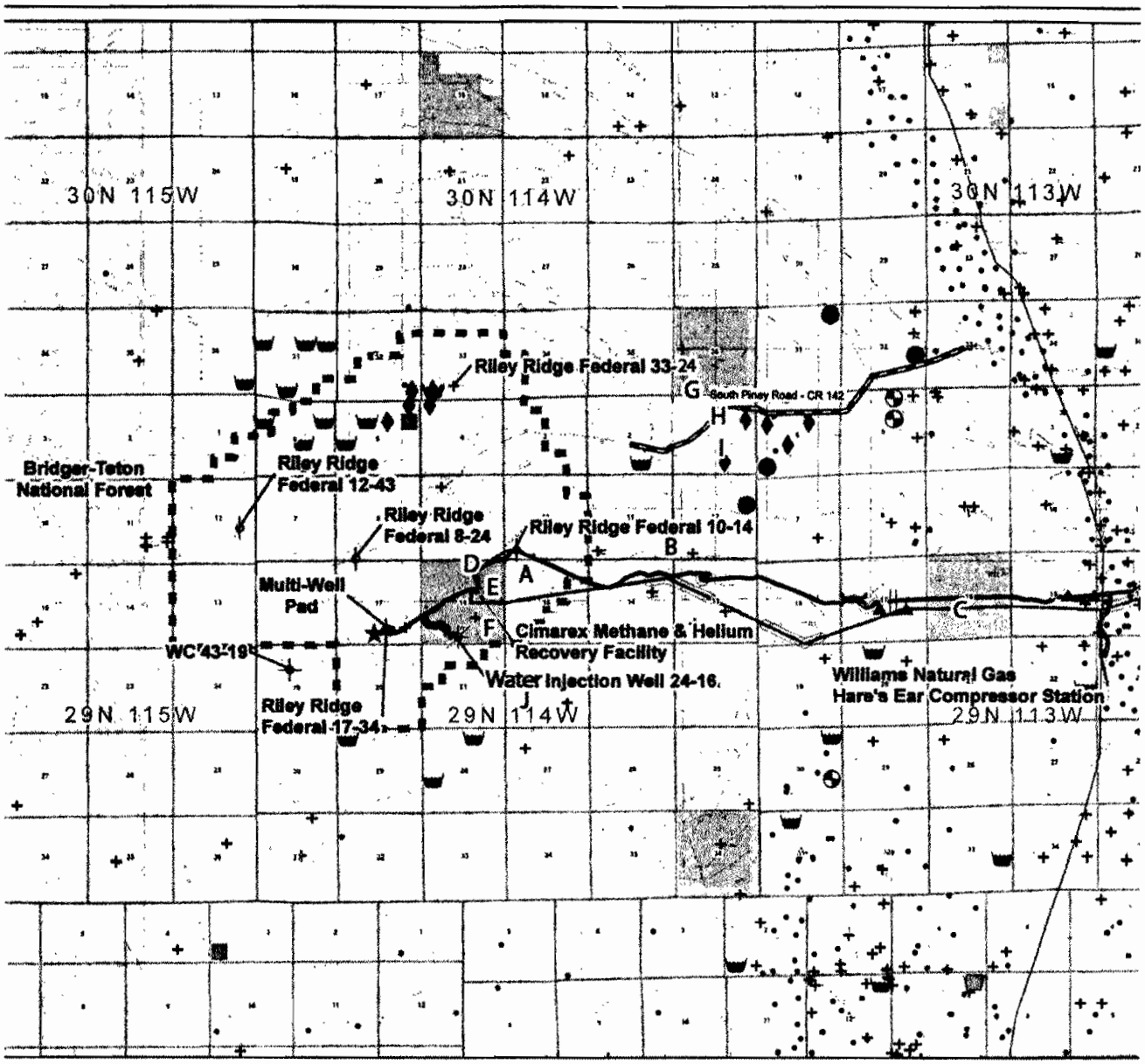

Legend

- Helium Plant
- PA Gas Well
- Shutin Gas
- Meteorological Tower
- Water Injection Well
- CBM Water Well
- Domestic Water Well
- Stock/Domestic Water Well
- Stock Water Well
- MIS Water Well
- Active Well
- Plugged & Abandoned Well
- Existing Culvert
- Existing Cattle Guard
- Existing Cattle Guard & Gate
- Proposed Electric
- Proposed Electric, Water & Fiber Optic Line
- Proposed Gas, Electric, Water & Fiber Optic Line
- Proposed Gas & Fiber Optic Line
- Proposed Gas, Electric & Fiber Optic Line
- Proposed Helium & Fiber Optic Line
- Proposed Electric, Helium & Fiber Optic Line
- Proposed Electric, Gas, Helium & Fiber Optic Line
- Proposed Electric & Fiber Optic Line
- Existing Williams' Pipeline
- Existing Improved Road
- Pending Final Design and Alignment
- Well Pad
- Substation

Ownership

- BLM
- Forest Serv
- State
- Private
- Riley Ridge

ATTACHMENT C

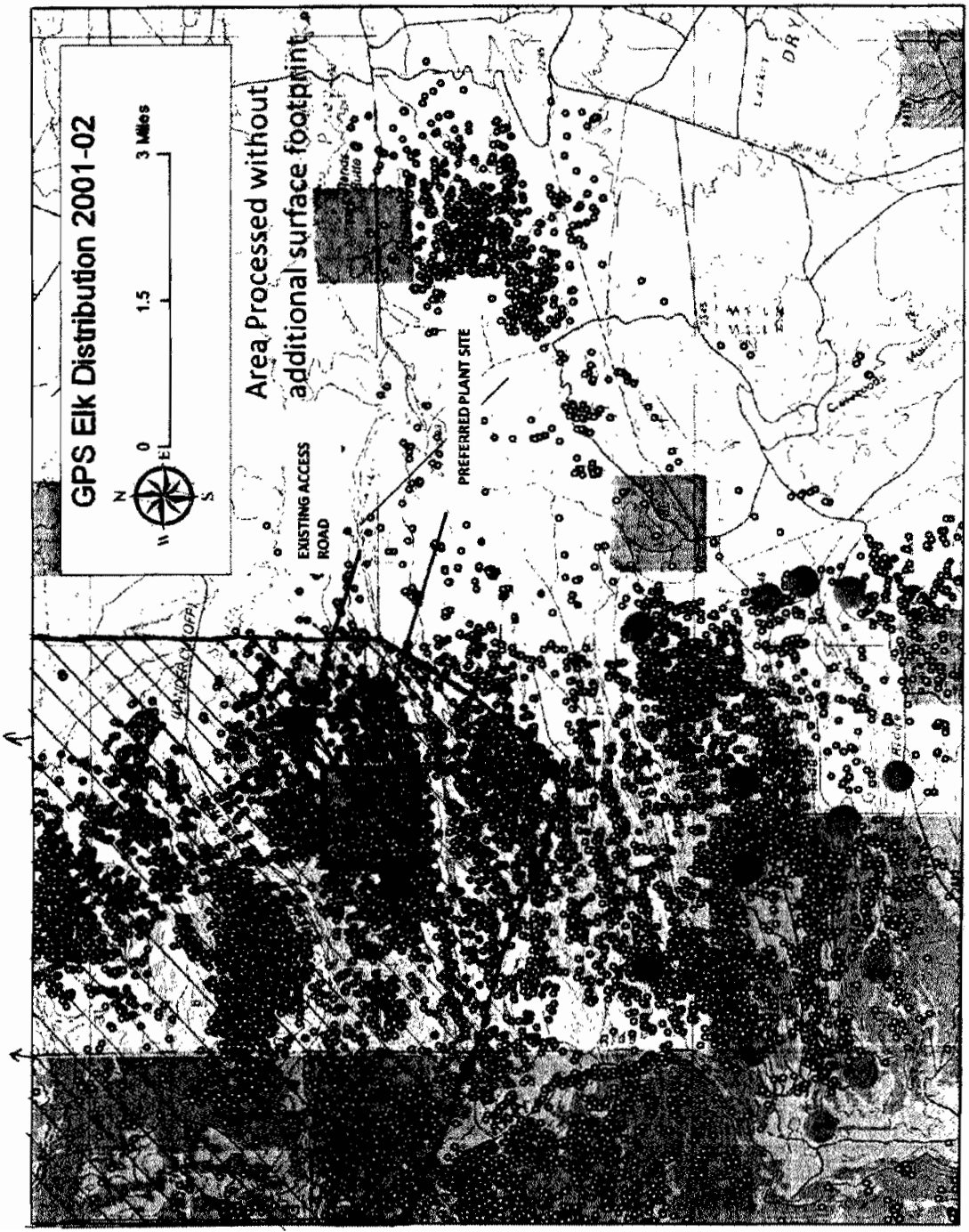

Exhibit D

WYOMING GAME AND FISH DEPARTMENT

5400 Bishop Blvd. Cheyenne, WY 82006

Phone: (307) 777-4600 Fax: (307) 777-4610

Web site: http://gf.state.wy.us

GOVERNOR
DAVE FREUDENTHAL

DIRECTOR
TERRY CLEVELAND

COMMISSIONERS
RON LOVERCHECK – President
BILL WILLIAMS, DVM – Vice President
LINDA FLEMING
CLARK ALLAN
JERRY GALLES
CLIFFORD KIRK
KERRY POWERS

March 17, 2008

WER 11757
Office of State Lands and Investments
Cimarex Riley Ridge Project
(AKA Rand's Butte Project)
Sublette County

Mr. Jim Arnold
Real Estate Management - Assistant Director
Office of State Lands and Investments
Herschler Building, 3rd West
122 West 25th Street
Cheyenne, Wyoming 82002-0600

Dear Mr. Arnold:

Cimarex Energy Company proposes to construct a 200 MMSCFD capacity Gas Processing and Carbon Sequestration Plant on a State Land parcel (Section 16, T29N, R114W) in Sublette County. Wyoming Game and Fish Department (WGFD) have identified this location as important winter wildlife habitat for elk and moose. This area, known as Riley Ridge, includes crucial winter range for the largest wintering elk herd in Sublette County.

Cimarex expects the plant construction to take 12 months. Once complete, the plant will operate year-round, including during winter when access to and activity at the proposed plant location would be expected to result in considerable disturbance to the elk.

WGFD data indicate elk concentrate on this State section during winter months. Typically, free-ranging elk will avoid winter habitats where human disturbance occurs. The Riley Ridge area provides native elk winter range for approximately 150-200 elk, or about 40% of all elk in the Piney Elk Herd that winter on native ranges along the Wyoming Range Front. There are no other native elk winter ranges remaining outside of the Riley Ridge area that provide the vital requirements of security, freedom from human disturbance, and natural forage to support this number of elk each winter. Thus, we expect significant impacts to the elk if they cannot access this area.

WGFD has been working with Cimarex to identify an alternate location for the plant. To avoid the expected impacts to elk, WGFD recommends the plant location be moved approximately two miles southeast of the currently proposed location. We have also visited with the BLM to discuss other resource issues for the alternate location, and plan to continue working with Cimarex and the BLM to identify an appropriate alternate location.

WGFD appreciates the benefit of carbon sequestration, but we would certainly like to avoid impacting crucial elk habitat function on this particular location. We ask that you consider these impacts and the decreased habitat value for the elk when assessing this proposal. We would be happy to take part in any discussions with you and Cimarex regarding possible alternate locations for this project.

Thank you for the opportunity to provide comments.

Sincerely,

for JOHN EMMERICH
DEPUTY DIRECTOR

JE:VS

cc: Ryan Lance – Governor's Planning Office

WYOMING GAME AND FISH DEPARTMENT

5400 Bishop Blvd. Cheyenne, WY 82006

Phone: (307) 777-4600 Fax: (307) 777-4610

Web site: http://gf.state.wy.us

GOVERNOR
DAVE FREUDENTHAL

DIRECTOR
TERRY CLEVELAND

COMMISSIONERS
JERRY GALLES – President
CLIFFORD KIRK – Vice President
CLARK ALLAN
FRED LINDZEY
RON LOVERCHECK
ED MIGNERY
BILL WILLIAMS, DVM

May 21, 2008

WER 11757
Office of State Lands and Investments
Cimarex Riley Ridge Project
Gas Plant proposal
Sublette County

Jim Arnold
Real Estate Management - Assistant Director
Office of State Lands and Investments
Herschler Building, 3rd West
122 West 25th Street
Cheyenne, Wyoming 82002-0600

Dear Mr. Arnold:

We understand that Cimarex Energy Company has submitted an application to construct a 200 MMSCFD capacity Gas Processing and Carbon Sequestration Plant on a State Land parcel (Section 16, T29N, R114W) in Sublette County.

This is located along the Wyoming Range Front, in the Riley Ridge area, and includes crucial winter range for the largest wintering elk herd in Sublette County (200+, or about 40% of the Piney Elk Herd Unit that winter on native range). Attached are maps from a University of Wyoming Cooperative Wildlife Unit master's project (2000-2002) that shows elk use on Section 16 and the surrounding area. Winter use is highest, and there is also spring use and likely some calving there as well.

Cimarex expects the plant construction to take 12 months. Once complete, the plant will operate year-round, including during winter when access to and activity at the proposed plant location would be expected to result in considerable disturbance and significant impact to the elk. Mitigation opportunities for the elk impacts are extremely limited and not considered a viable option.

We previously asked, in a letter dated March 17, 2008, that you consider these impacts and the decreased habitat value for the elk when assessing this proposal, and indicated that we were working with Cimarex to find a possible solution.

We have had additional discussions with Cimarex and have been unable to find a solution for the elk issue on the State section. We must continue to recommend that options for siting the plant in a less crucial habitat area be considered.

Toward that end, it is our understanding that Cimarex has an option to place the plant on the adjoining Section 10, which is private land. While this would still be on crucial winter range, it would be farther onto the periphery of the winter range. Our field biologists have indicated that the plant site for this location has less elk use and the elk impact there would be much less significant.

Given that option, it would certainly be our strong recommendation that the plant be located on the optional site and off State land.

Thank you for your consideration of this issue. We continue to be available for discussion.

Sincerely,

for TERRY CLEVELAND
DIRECTOR

TC:VS

Attachments

June 16, 2008

To Governor Dave Freudenthal and the Wyoming State Land Board,

I have lived within a few miles of the proposed Cimarex Energy Company's Madison Gas Development Project site for 25 years and I have some very pressing concerns about their proposal. The venting of poisonous gas during a mechanical malfunction and the release of hydrogen sulfide[1] into the air on a calm night would be totally devastating to everything in its path, as was demonstrated when the well at this location blew out during its original drilling (necessitating the evacuation of the local residents). Even if the escaping gas is burned, thus changing it to sulfur dioxide, the ramifications to my greenhouse operation, which earns over $300,000 per year, could be a loss of approximately $200,000. Sulfur dioxide, although not *as* poisonous to people, *is* highly toxic to tomato plants. In the event of a mandatory evacuation heating systems for my greenhouses would shut down resulting in an immediate freeze (during much of the year) of our entire 28,000 sq ft facility. This would result in not only the loss of plants, but also the freeze and rupture of the boiler and water system resulting in an additional $100,000 worth of damage. Other agricultural losses in the area would be in the millions, and each agricultural operator would have to estimate their own values. I am sure the loss of wildlife can be estimated by Wyoming Game and Fish. Although a cash bond to cover possible damages resulting from the planned system might be acceptable for business losses, it would of course never be able to cover the loss of human life. All sour-gas processing facilities that I am aware of are always located in totally unpopulated areas, which would be a better option. Given the fact that there are approximately 35 winter residents, not including daytime employees, within approximately 6 miles and an unknown increase of this number in the summertime due to recreational activities, I feel this needs to be addressed in a satisfactory manner. Notification by telephone would be difficult and cell phone signal is pretty much nonexistent in much of the area. A sheriff's deputy dispatched from Big Piney would have a hard time locating a rancher who's working out on their property. The wind speed and direction in this area are consistently inconsistent. Water quality is also an extreme concern. Loss of quality water would of course be devastating to the agricultural community here.

This operation is not your average natural gas processing plant. It brings up highly toxic gas and attempts to re-inject it at extreme pressures through a system that has yet to be tested on such a scale. Residents who I have talked with in Big Piney range in opinion from "it shouldn't be built in the forest" to flatly saying that "we don't want it and we don't need it". Of the people with whom I've discussed this, the general opinion is that Sublette County has no more room for construction workers' housing or the desire to bring more jobs to an economy that is overwhelmed by workers at this point.

While it is true that the Cimarex plant is not being built in a major city, I feel people who have invested their lives in this valley should have the right not to be cast aside in the name of progress. Many of these people have lived here for generations. We have chosen to live here, and have survived the winters, the wind, and the droughts. Please don't think of us as disposable. We are an important part of Wyoming, its history, and its future.

Stewart M. Doty
WYOMATOES
PO Box 375
Big Piney, WY 83113
(307) 276-3057
Wyomatoes@wyoming.com

[1] The toxicity levels of hydrogen sulfide can be found online at a site such as Wikipedia.

Wyoming Outdoor Council
wyomingoutdoorcouncil.org

444 East 800 North
Logan, UT 84321
t: 435.752.2111
f: 435.753.7447

July 10, 2008

Mr. Jim Arnold
Real Estate Management—Assistant Director
Office of State Lands and Investments
Herschler Building, 3rd West
122 West 25th Street
Cheyenne, WY 82002-0600

Re: Cimarex Energy, Inc. Rands Butte Project Methane and Helium Recovery Facility

Dear Mr. Arnold:

Please accept these comments from the Wyoming Outdoor Council regarding the above project, which is proposed in Sublette County (hereinafter we will refer to it as the "Cimarex Project"). This large industrial facility in the foothills of the Riley Ridge would recover methane and helium, at least partially from the approximately four new wells that would be drilled, and reinject gasses, apparently primarily carbon dioxide and toxic hydrogen sulfide, back into the ground. The project would be located in the Riley Ridge Federal Unit. The preferred location for this project from Cimarex's standpoint is Site 16-D, which is located in T29N R114W Section 16.

This proposed site is problematic and should be rejected by the Office of State Lands and Investments because construction of the Cimarex Project on this location will be harmful to elk that winter in the area. In correspondence from the Wyoming Game and Fish Department (WGFD) to the land board, the WGFD stated that this area is critically important for wintering elk and moose, that access to the proposed plant site would "result in considerable disturbance to the elk," and that about 40% of the elk in the Piney Elk Herd that winter on native ranges (a relatively rare situation in northwestern Wyoming) rely on this area. The WGFD stated, "There are no other native elk winter ranges remaining outside of the Riley Ridge area that provide the vital requirements of security, freedom from human disturbance, and natural forage to support this number of elk each winter. Thus, we expect significant impacts to the elk if they cannot access this area." In addition to providing winter range for the elk herd, some calving also may occur there, and as the WGFD also stated, "Mitigation opportunities for the elk impacts are extremely limited and not considered a viable option." Given these severe problems, we urge

the Office of State Lands and Investments to reject construction of the Cimarex Project on the proposed site.

We would also note that at least on federal lands in the Riley Ridge Unit, the BLM has not been permitting oil and gas development activities since a March 2005 Documentation of Land Use Plan Conformance and NEPA [National Environmental Policy Act] Adequacy, or DNA, found that the 1983 Riley Ridge Environmental Impact Statement was deficient is several regards. We have enclosed that DNA for your consideration. We especially note the concerns raised over the air quality analysis in this DNA. We feel this is a significant issue that must be addressed before the Cimarex Project is approved.

As the State knows, last winter the Wyoming Department of Environmental Quality (DEQ) was forced to issue five health advisories due to elevated ozone levels in the Pinedale area. Clearly air quality is a major concern in this area. If the Cimarex Project Plant will emit precursors to ozone formation such as volatile organic compounds and nitrogen oxides, the State must have assurance that this will not lead to or contribute to violation of air quality standards *before* this plant is approved by the land board, not after. At the June 5, 2008 Air Quality Advisory Board meeting in Casper, Air Division Administrator Dave Finley stated to the Board, "We are anticipating we are going to have a non-attainment area" in Sublette County. Because this area is nearing noncompliance with the National Ambient Air Quality Standard for ozone, the implications of that change in status are numerous and highly significant. Thus, the State Lands Board should ensure this issue is fully considered prior to permitting the Cimarex Project. Given the numerous other large industrial projects undergoing environmental analysis in this area—including the Pinedale Anticline infill on BLM land and the Plains Exploration and Development (PXP) project on the Bridger-Teton National Forest—there is likely little room for increased emissions of ozone precursors. In addition, Class I areas in this area (principally the Bridger Wilderness Area) must receive full protection of visibility under the provisions of the Clean Air Act, and both ozone and nitrogen oxide emissions are significant contributors to visibility problems.

Another significant concern with this project is that it will apparently be processing and/ or producing large quantities of hydrogen sulfide, a very toxic gas. This seems to be driving many of the siting and other planning considerations for this project. For example, in the document before the board entitled "Board Matter D-14," Cimarex stated that "The primary and most critical consideration for all location reviews was employee and public health and safety and using the natural wind normally present." It seems apparent that this industrial site will be a dangerous place that the public must be protected from. If this is true, this raises grave questions in our view as to whether this project should be approved at all. Creating a public health hazard does not seem like good public policy to us. We know that much of the natural gas from the Riley Ridge area is "sour" (i.e., it contains hydrogen sulfide), but there is much "sweet" natural gas available in Wyoming, so there seems to be little need to pursue development of sour gas if doing so presents public health threats, or potentially does. We ask the Office of State Lands and Investments to fully consider this issue before approving this project.

Thank you for considering these comments, and please keep us apprised of the status of this project.

Sincerely,

Bruce Pendery

cc: Governor Dave Freudenthal
Secretary of State Max Maxfield
State Auditor Rita Meyer
State Treasurer Joseph B. Meyer
Superintendent of Public Instruction Dr. Jim McBride

Documentation of Land Use Plan Conformance and NEPA Adequacy (DNA)

U.S. Department of the Interior Bureau of Land Management
WY100-DNA05-107

Note: This Worksheet is to be completed consistent with the policies stated in the Instruction Memorandum entitled, "Documentation of Land Use Plan Conformance and National Environmental Policy Act (NEPA) Adequacy" transmitting this Worksheet and the "Guidelines for using the DNA Worksheet," located at the end of the Worksheet.

A. Describe the Proposed Action

B. Land Use Plan (LUP) Conformance

LUP Name:* *Pinedale RMP* Date Approved: *12/12/88*
Other document: *Bridger-Teton NF Land and RMP* Date Approved: *3/2/90*
Other document _____ Date Approved

* List applicable LUPs (e.g., Resource Management Plans and activity, project, management, or program plans, or applicable amendments thereto)

☐ The proposed action is in conformance with the applicable LUPs because it is specifically provided for in the following LUP decisions:

According to provisions held within the Pinedale RMP, the planning area will be open to consideration for exploration, leasing, and development for all leasable minerals, which include oil, gas, coal, shale, and geothermal steam.

☐ The proposed action is in conformance with the LUP, even though it is not specifically provided for, because it is clearly consistent with the following LUP decisions (objectives, terms, and conditions):

C. Identify applicable NEPA documents and other related documents that cover the proposed action.

List by name and date all applicable NEPA documents that cover the proposed action.

Riley Ridge Natural Gas Project Environmental Impact Statement, November 1983
Riley Ridge NGP Supplemental Environmental Assessment, Exxon LaBarge Project Well Field Changes, February 1985
Riley Ridge NGP Supplemental Environmental Assessment Exxon LaBarge Project Phase II, May 1985
Riley Ridge NGP Supplemental Environmental Assessment, Exxon LaBarge Project Waste Water Disposal, June 1985

List by name and date other documentation relevant to the proposed action (e.g., biological assessment, biological opinion, watershed assessment, allotment evaluation, and monitoring report).

Big Piney/La Barge Coordinated Activity Plan Environmental Assessment, August 1991
Mobil Tip Top/Hogsback Unit Natural Gas Project, Big Piney/LaBarge Coordinated Activity Plan Area Environmental Assessment, March 1994
Supplemental Information Report (SIR) Riley Ridge Natural Gas Project, August 2004
Biological Evaluation to supplement SIR, July 2004
Biological Assessment to supplement SIR, May 2004

D. NEPA Adequacy Criteria

1. Is the current proposed action substantially the same action (or is a part of that action) as previously analyzed? Is the current proposed action located at a site specifically analyzed in an existing document?

Documentation of answer and explanation:

Both the current proposal and the proposed action for the 1984 Riley Ridge EIS have a natural gas well development component. Beyond the fact that both would develop wells, the proposed actions vary substantially.

Within the Riley Ridge DEIS, major project actions and components included the following: (1) exploration, development and abandonment of a 159,928-acre, low-Btu gas well field projected to develop 238 Hydrogen Sulfide (H2S) sour gas wells; (2) construction, operation, maintenance, and abandonment of four sour gas treatment plants with a total processing capacity of 2.8 billion cubic feet per day (cfd) and a production threshold of 576 cfd of methane; (3) construction, operation , maintenance, and abandonment of associated rights-of-way for gathering lines, trunk lines, railroads, access roads, transmission lines, and other ancillary facilities; and (4) processing and transportation of products and by-products.

The proposed action as it relates to the Riley Ridge EIA, addresses sweet gas development as opposed to sour gas development of which have entirely different health, safety, and production requirements. The proposed action is consistent with the number of wells analyzed within the Riley Ridge EIS, but the spacing analyzed was approximately 1 well per 640 acres. The proposed action would significantly increase the density of well spacing previously analyzed. Development of a sweet gas natural gas field would also require the authorization of a new sweet gas pipeline corridor, requiring additional compression, which was not analyzed within the original Riley Ridge EIS.

In 1994, an Environmental Assessment was completed for Mobil Tip Top/Hogsback Unit Natural Gas Project which overlapped a portion of the Riley Ridge project area. While the analysis area for both of these documents overlap a portion of the Riley Ridge EIS area, neither document states or infers that they supplement, augment or otherwise modify or apply to the Riley Ridge EIS area.

2. Is the range of alternatives analyzed in the existing NEPA document(s) appropriate with

respect to the current proposed action, given current environmental concerns, interests, and resource values?

Documentation of answer and explanation:

NO—The range of alternatives analyzed within the 1984 Riley Ridge EIS focused on the placement/siting of four processing plants that would be needed to make the sour gas saleable. Other components of these alternatives included two methodologies addressing sulfur transport; three possible routes for power supply; the placement of man-camps which would provide employee housing; as well as the well field development of 238 H2S wells. A No Action alternative was also analyzed in the 1984 Riley Ridge EIS document. Several alternatives were considered but dropped from detailed analysis. These include: additional treatment plan siting scenarios and the use of multi-well directional drilling.

The current proposed action, given current environmental concerns, interests, and resource values was not addressed by any of the above referenced alternatives as written within the Riley Ridge document. On page 1-53 of the DEIS, an allowance for approximately 21 sweet gas wells per year was made and the impacts of said sweet gas wells was to have been included as part of the baseline conditions from which impacts could be measured. It was ***not carried forward*** *in any of the subsequent decision documents. Some aspects of the proposed action, such as the processing of rights-of-ways actions, overall well pad design, road and pipeline placement would not change. However, alternatives which would have addressed tighter well spacing beyond the 1 well per 640 acres or the location of a new sweet gas pipeline corridor, were not included as part of the 1984 document. The current project would require no new employee housing, and power sources are already in existence. Because sweet gas is made saleable at the well site location, no new processing facilities would be required beyond in-situ production activities.*

3. Is the existing analysis valid in light of any new information or circumstances?

Documentation of answer and explanation:

NO- Within the Pinedale Field Office, there are currently two areas, the Pinedale Anticline and the Jonah field, which have undergone rapid development. The Pinedale Anticline is currently piloting 20 acre-spaced wells and the Jonah Infill may be going to 5-10 acre-spaced wells. Because of the rapid rate of development, it is hypothesized that emissions of Nitrous Oxide (NOx) are beyond what has been analyzed in any existing documents for these areas, and may require new, additional monitoring to determine impacts on the adjacent Class I Bridger National Forest airshed and high-quality area lakes. Because of NOx concerns, additional air quality monitoring is in the foreseeable future. In particular, previous analysis of air quality within the Pinedale Field Office as a whole has classified drilling rigs as non-point sources but because of the sheer number of rigs operating at one time, they may need to be addressed as a point source. Existing air quality analysis within the Riley Ridge document concentrated on emissions of SO_2 and H_2S, not NOx.

Additionally, several species became eligible for listing under the Endangered Species Act following the implementation of the Riley Ridge decision document. The Riley Ridge document

has not been updated with n[illegible] analyses addressing impacts to the Threatened and/or Endangered Species. The T&E species of concern include: the Grizzly Bear (Ursus arctos horribilis), Gray Wolf (Canis lupus), and Canada lynx (Lynx Canadensis). Also not included in the original evaluation were probable water depletions in the Colorado River System and impacts to threatened and/or endangered aquatic species. These include: the Bonytail chub (Gila elegans), Colorado pikeminnow (Ptychocheilus lucius), Humpback chub (Gila cypha, and Razorback sucker (Xyrauchen texanus). Water depletions could also affect the native, pure strain Cutthroat trout for which an upper watershed area was designated as an Area of Critical Environmental Concern after the Riley Ridge document.

Impacts to a BLM sensitive species, the greater sage-grouse, have not been addressed within the Riley Ridge documents.

Because the CAP EA addressed concerns under an 80-acre spacing scenario, analyses are valid but the cumulative impacts have not been addressed to the full extent required under a 40-acre spacing scenario. In addition, the above-listed Threatened and/or Endangered Species, and the sensitive greater sage-grouse, were accounted for in the CAP analyses, but possible impacts to Canada lynx or their habitat, was not.

4. Do the methodology and analytical approach used in the existing NEPA document(s) continue to be appropriate for the current proposed action?

Documentation of answer and explanation:

NO- The EIS for the Riley Ridge Natural Gas Project was completed 21 years ago (January 84) and several significant issues have arisen since. The methodology and analytical approach employed are still valid and applicable to some but not all elements of the current proposed action. Some significant issues identified during public scoping of the original project as well as new issues that have surfaced/re-surfaced. In recent discussions between Forest Service and BLM personnel, it has become apparent that new circumstances as well as current conditions and potential impacts warrant additional analysis. These issues include but are not limited to 1) air quality, 2) Threatened and Endangered Species, 3) Cumulative Impacts due to proposed tighter spacing of well sites as well as proposed pipelines that were not analyzed, 4) sour gas wells vs. conventional gas wells

The air quality methodology used in the 1984 analysis is considered archaic to air quality modeling procedures and techniques used today. Industry analysis completed in 1999 adjusted qualitatively to a current 2004 figure shows actual impacts are in excess of those analyzed and approved in the original Pinedale Anticline EIS. NOx levels adjusted from the 1999 analysis indicate we are above the threshold or additional cumulative Air Quality impact analysis in the original Pinedale Anticline EIS. This is without taking into account emissions from the Jonah field and the Riley Ridge Natural Gas Project and how they will affect current conditions related to NOx emission levels in the upper Green River Basin at this time.

Since 1984 new Threatened and/or Endangered Species have been listed that were not analyzed nor were they included in a biological assessment to determine if the proposed project will affect the species. Some of these species include the Grizzly Bear (Ursus arctos horribilis), Gray Wolf (Canis lupus), Canada lynx (Lynx Canadensis). Also not included in the original evaluation was

the possibility of water depletions in the Colorado River System and the impacts to threatened and endangered species (Bonytail chub (Gila elegans), Colorado pikeminnow (Ptychocheilus lucius), Humpback chub (Gila cypha, and Razorback sucker (Xyrauchen texanus)) inhabiting the downstream reaches.

Current and planned spacing density vs. the 1 well per section that was analyzed, as well as sour gas wells vs. conventional wells with pipelines that were not analyzed, raises concerns regarding surface placement and the quantity of new surface disturbance, dust and habitat fragmentation. This tighter spacing as well as the proposing of conventional wells and pipelines requires that the Effected Environment be further analyzed to determine the effect on Wildlife and Fisheries, Water Resources, Air Quality, Soils and Vegetation, Visual Resources, Cultural Resources, Recreation Resources, Grazing, Timber and Transportation Networks.

5. Are the direct and indirect impacts of the current proposed action substantially unchanged from those identified in the existing NEPA document(s)? Does the existing NEPA document analyze site-specific impacts related to the current proposed action?

Documentation of answer and explanation:

NO- While many of the direct and indirect impacts identified in the existing Riley Ridge EIS would remain substantially unchanged with the current proposed action there will be some elements of the current proposed action that would substantially change direct and indirect impacts that were identified in the existing NEPA document. The proposed planned and current spacing density and addition of pipelines would result in additional surface disturbance. This tighter spacing and new surface disturbance would increase human activity levels, erosion and sedimentation, air quality impacts, habitat fragmentation, as well as possibly affecting newly listed T&E Species and impacting visual resources, among other elements identified in the existing NEPA. The existing NEPA document does not analyze site specific impacts related to the current proposed action as spacing density was analyzed at 1 well per section and the new proposed pipeline was not analyzed. Current and proposed spacing density is greater than 1 well per section. Multiwell Directional Drilling was an alternative considered in the original Riley Ridge EIS but eliminated from further analysis.

6. Are the cumulative impacts that would result from implementation of the current proposed action substantially unchanged from those analyzed in the existing NEPA document(s)?

Documentation of answer and explanation:

NO-*Two additional natural gas projects are proposed in this area, one is the Jonah Infill project which proposes up to 3100 additional well on 5 to 10 acre spacing within the Jonah Field. The other is the South Piney Coalbed Methane project which is proposing up to 210 wells. The cumulative impacts from these proposed projects in conjunction with the current proposed activities in the Riley Ridge area would not be the same as those described in the initial EIS for the Riley Ridge Natural Gas Project.*

The air quality methodology used in the 1984 analysis is considered archaic to air quality modeling procedures and techniques used today. Industry analysis completed in 1999 adjusted

qualitatively to a current 2004 figure shows actual impacts are in excess of those analyzed and approved in the original Pinedale Anticline EIS. NOx levels adjusted from the 1999 analysis indicate we are above the threshold for additional cumulative Air Quality impact analysis in the original Pinedale Anticline EIS. This is without taking into account emissions from the Jonah field and the Riley Ridge Natural Gas Project and how they will affect current conditions related to NOx emission levels in the upper Green River Basin at this time.

7. Are the public involvement and interagency review associated with existing NEPA document(s) adequate for the current proposed action?

Documentation of answer and explanation:

Public involvement including interagency review for Riley Ridge Natural Gas Project EIS occurred during the preparation of the November 1983 EIS and January 1984 Record of Decision and then again for the Supplemental EA for the Riley Ridge Project in February 1985. New circumstances (outlined above #4) as well as current conditions and potential impacts require new public involvement and interagency review to some but not all elements of the current proposed action.

E. Interdisciplinary Analysis: Identify those team members conducting or participating in the NEPA analysis and preparation of this worksheet. (See attached specialist input sheets)

David Geer	*Natural Resource Specialist*
Merry Gamper	*Natural Resource Specialist*
Bill Lanning	*Supervisory Natural Resource Specialist*
Lisa Solberg	*Wildlife Biologist*
Steve Laster	*Rangeland Management Specialist*
Carol Kruse	*Planning & Environmental Coordinator*

Conclusion

☐ Based on the review documented above, I conclude that this proposal conforms to the applicable land use plan and that the NEPA documentation fully covers the proposed action and constitutes BLM's compliance with the requirements of NEPA

Note: If you found that one or more of these criteria is not met, you will not be able to check this box.

Based on the preceding evaluation, we found the 1984 Riley Ridge EIS to be deficient in several categories. Therefore to implement additional actions under the umbrella of this EIS supplemental NEPA analysis is needed.

NEPA options available include: 1) Individual EA's for individual APD's, 2) Programmatic EA to supplement the EIS, 3) Supplemental EIS, 4) New stand alone EIS.

***Individual EA/APD**: This would not be practical because it would not be expedient or realistic to prepare comprehensive air quality/emissions cumulative impact analysis for each and every*

APD and to do less than a c[illegible]prehensive analysis would result in piece mealing the effects.

***Programmatic EA**: Air quality impacts would likely be significant, consequently a FONSI could not be achieved. Additionally USFS EA process is essentially the same as the EIS process in terms of public comment periods and overall processing time.*

***Supplemental EIS**: This would be the recommended option. It will allow the specific deficiencies to be corrected without re-creating those EIS sections that are still viable and applicable to the current proposed actions.*

***New EIS**: This is not recommended because it would duplicate/re-create portions of the existing EIS that are still viable and applicable to current proposed actions.*

/s/ Priscilla E. Mecham
Signature of the Responsible Official

March 3, 2005
Date

Note: The signed Conclusion on this Worksheet is part of an interim step in the BLM's internal decision process and does not constitute an appealable decision.

From: Jim Arnold
To: Fresquez, Lorraine
Date: 8/1/2008 9:11 AM
Subject: Fwd: Cimarex Plant

>>> "Tim Thompson" <crosslazytwo@wildblue.net> 7/20/2008 7:58 PM >>>
To: State Land and Investments, Director Lynn Boomgaarden, Assistent Director Jim Arnold. State Loan and Investment Board,:Chairman, Governor Dave Freudenthal, Secretary of State Max Maxfeild, State Auditor Rita Meyer, State Treasure Joseph Meyer, Superintendent of Public Instruction Dr. Jim McBride.

I would like to voice my concerns and comments pertaining to the Cimarex Energy Co. Application for a helium processing plant and the infrastructure associated with this plant located in a state school section in the Riley ridge area on the Southern end of the Wyoming range. The approval of this application will have numerous effects to large tracts of land outside the permit area which is home to many types of wildlife along with permitted livestock allotments both state and federal along with, private lands. Inevitable complications to a herd of elk, local livestock producers their lifestyle and the risk of losing grazing allotments and permits.

A brief history begins with a small group of elk staying in this area from late fall through winter and into spring seasons in the early 1980's with numbers around 15-25 head growing to over 300 head to date. The past 25 plus years this herd has remained in this same area through fall, winter, spring and summer, thriving and prospering with minimal oil and gas impacts, the siege of the wolf reintroduction, state regulated hunting seasons, and forage competition from agriculture users such as myself throughout their entire natural range and existence. In this area and time frame this particular herd has caused minimal cost to local agriculture producers our ranch in particular in lost forage and fence damage, again minimal, and to the people and the State of Wyoming 0 $ cost for what is and should be looked at as an indigenous herd, a hidden gem competing against nature, some unnatural nature, industry, agriculture, and government making this herd prime for study and documentation.

Concerns for impacts caused from the dispersal of this elk herd has a serious brucellosis alert and a much higher contact opportunity than already excites with our operation that borders this project area and lies with in the improved roads, pipe- lines, and power line easements to be constructed, along with the traffic and man power to operate such a project. Historically our cow calf operation has of late professionally brucellosis tested our herd each fall for the voluntary State of Wyoming test results and personal knowledge. The managers of this particular elk herd have no documentation relating to there health status, or the extent of their entire range. Through several phone conversations mitigation was never directly addressed towards local livestock producers with the concerns of elk/ cattle contact, exposure, and competition seemed a non issue or concern of the Wyoming Game and Fish or Cimarex Energy personal. This is a real issue and concern to our operation and adjacent allotment and permit users as well as private land owners.

Meetings have taken place between Wyoming Game and Fish and Cimarex Energy Co. to discuss various mitigation plans along with dollar amounts for potential problems, conflicts, and managements plans for winter feeding, habitat improvement, studies of migratory patterns and health documentation. Our ranches private ground, state grazing leases, BLM allotments of summer range lies within and next to this herd natural range. This exposes our

family owned and operated of 106 years federal and state permits for grazing first in line for reduction or cancellation as steps to these mitigation plans are implemented with no input from agriculture / livestock producers in the immediate area.

The boards decision towards this permit should be put on hold to allow state agencies, and the energy company along with interested land owners, and permit holders the proper time and professional opportunity to document the full extent of this particular herds range, patterns, routes, tendencies, along with a complete health status report for the better understanding of how and why this area has allowed this particular herd to survived and produce the healthy numbers that have remained obscure to so many for so long, posing such controversies and alarms to the numbers of different entities involved directly or indirectly. A moratorium of this permit will not only allow the full understanding of this herd it will allow the needed time to look at the protection and preservation of the cutthroat trout in the Spring and Beaver creeks drainage, the historically safe and healthy preservation of the livestock and other wildlife, maintaining existing allotment size and permit numbers for agriculture, and the paramount importance of safety practices, secure methods and procedures to drilling , the production procedure along with the handling and transporting of H2s sour gas in the weather conditions and prevailing wind factors in the area directly up wind of us with concerns .

Sincerely Yours,

Timothy S Thompson
President. Cross Lazy Two L & L
PO Bx 220
Big Piney, Wyo 83113
307 276 3660
crosslazytwo@wildblue.net

Appendix D
Cimarex Air Quality Permit CT-8093

DEPARTMENT OF ENVIRONMENTAL QUALITY
AIR QUALITY DIVISION
122 WEST 25TH STREET
HERSCHLER BUILDING
CHEYENNE, WY 82002

FAX TRANSMITTAL COVER SHEET

No. of Pages: 22 (Cover Sheet Included)

DATE: 6/19/09

TO: Cimarex Energy

PHONE NO.: 918-295-1632 FAX NO.: 918-699-5795

FROM: DEQ/AQD PHONE NO.: 307-777-7340

COMMENTS: We will be mailing out the original signed copies in the mail

Thanks!!

Kim

IF YOU DID NOT RECEIVE ALL OF THE PAGES, PLEASE NOTIFY THE SENDER AS SOON AS POSSIBLE.

OFFICE NO. (307) 777-7391 *FAX NO. (307) 777-5616*

Department of Environmental Quality

To protect, conserve and enhance the quality of Wyoming's environment for the benefit of current and future generations.

Dave Freudenthal, Governor

John Corra, Director

June 18, 2009

Mr. Clay Duellman
Special Project Manager
Cimarex Energy Company
15 East 5th Street, Suite 1000
Tulsa, OK 74103

Re: Air Quality Permit CT-8093
Cimarex Energy Company
Permit Application AP-8093

Dear Mr. Duellman:

Enclosed is a copy of the air quality permit referenced above to construct the Riley Ridge Plant for methane and helium recovery. The facility will be capable of processing 200 MMscfd of gas produced from wells comprised primarily of carbon dioxide (CO_2), nitrogen (N_2), methane (CH_4), helium (He), and hydrogen sulfide (H_2S). Nearly all of the CO_2 and H_2S will be extracted and injected back into the producing reservoir, the nitrogen will be extracted and vented to the atmosphere, and the helium and methane will be recovered and sold. Facility equipment will include a heat medium heater, electrical compression, propane refrigerant, a diesel or propane fired auxiliary electrical generator and an emergency flare. The Riley Ridge Plant is located in Section 16, T29N, R114W, approximately sixteen (16) miles west-southwest of Big Piney, in Sublette County, Wyoming.

Comments received during the public comment period and hearing were considered in the final permit. A copy of the decision document for this permit is included. A new condition has been added and proposed conditions have been modified in the final permit. Below is a summary of the changes.

- Condition 23 (new) establishing a VOC limit for fugitive emissions.
- Condition 25 (revised) changed to the submittal of the annual emissions inventory from January 31 to March 1 of each year.
- Condition 30 (new) to comply with applicable requirements of 40 CFR part 63, Subpart ZZZZ.
- Condition 32 (revised) to include a notification within 15 days of replacement of the Tier 0 engine.
- Condition 33 (revised) to indicate the equipment to be replaced at the respective facilities and permits which are to be modified prior to startup of the Riley Ridge Plant. The Division has also included a requirement for notification of replacement of the respective equipment at each facility within 15 days of replacement.

If we may be of further assistance to you, please feel free to contact this office.

Sincerely,

David A. Finley
Administrator
Air Quality Division

cc: Tony Hoyt

Enclosures

Department of Environmental Quality

To protect, conserve and enhance the quality of Wyoming's environment for the benefit of current and future generations.

Dave Freudenthal, Governor

John Corra, Director

June 18, 2009

Mr. Clay Duellman
Special Project Manager
Cimarex Energy Company
15 East 5th Street, Suite 1000
Tulsa, OK 74103

Permit No. **CT-8093**

Dear Mr. Duellman:

The Division of Air Quality of the Wyoming Department of Environmental Quality has completed final review of Cimarex Energy Company's application to construct the Riley Ridge Plant for methane and helium recovery. The facility will be capable of processing 200 MMscfd of gas produced from wells comprised primarily of carbon dioxide (CO_2), nitrogen (N_2), methane (CH_4), helium (He), and hydrogen sulfide (H_2S). Nearly all of the CO_2 and H_2S will be extracted and injected back into the producing reservoir, the nitrogen will be extracted and vented to the atmosphere, and the helium and methane will be recovered and sold. Facility equipment will include a heat medium heater, electrical compression, propane refrigerant, a diesel or propane fired auxiliary electrical generator and an emergency flare. The Riley Ridge Plant is located in Section 16, T29N, R114W, approximately sixteen (16) miles west-southwest of Big Piney, in Sublette County, Wyoming.

Following this agency's proposed approval of the request as published April 16, 2009 and in accordance with Chapter 6, Section 2(m) of the Wyoming Air Quality Standards and Regulations, the public was afforded a 30-day period in which to submit comments concerning the proposed new source, and a public hearing was held May 18, 2009. Public comments were received and have been considered in the final permit. Therefore, on the basis of the information provided to us, approval to construct the Riley Ridge Plant as described in the application is hereby granted pursuant to Chapter 6, Section 2 of the regulations with the following conditions:

1. That authorized representatives of the Division of Air Quality be given permission to enter and inspect any property, premise or place on or at which an air pollution source is located or is being constructed or installed for the purpose of investigating actual or potential sources of air pollution and for determining compliance or non-compliance with any rules, standards, permits or orders.

2. That all substantive commitments and descriptions set forth in the application for this permit, unless superseded by a specific condition of this permit, are incorporated herein by this reference and are enforceable as conditions of this permit.

3. That a permit to operate in accordance with Chapter 6, Section 2(a)(iii) of the WAQSR is required after a 120-day start-up period in order to operate this facility.

4. That all notifications, reports and correspondences associated with this permit shall be submitted to the Stationary Source Compliance Program Manager, Air Quality Division, 122 West 25th Street, Cheyenne, WY 82002 and a copy shall be submitted to the District Engineer, Air Quality Division, 510 Meadowview Drive, Lander, WY 82520.

5. That written notification of the anticipated date of initial start-up, in accordance with Chapter 6, Section 2(i) of the WAQSR, is required not more than 60 days or less than 30 days prior to such date. Notification of the actual date of start-up is required within 15 days after start-up.

6. That the date of commencement of construction shall be reported to the Administrator within 30 days of commencement. In accordance with Chapter 6, Section 2(h) of the WAQSR, approval to construct or modify shall become invalid if construction is not commenced within 24 months after receipt of such approval or if construction is discontinued for a period of 24 months or more. The Administrator may extend the period based on satisfactory justification of the requested extension.

7. That performance tests be conducted, in accordance with Chapter 6, Section 2(j) of the WAQSR, within 30 days of achieving a maximum design rate but not later than 90 days following initial start-up, and a written report of the results be submitted. The operator shall provide 15 days prior notice of the test date. If a maximum design rate is not achieved within 90 days of start-up, the Administrator may require testing be done at the rate achieved and again when a maximum rate is achieved.

8. Initial performance tests, as required by Condition 7 of this permit, shall be conducted on the following source:

   i. Heat Medium Heater:

      NO_x, CO, and VOC Emissions: Testing shall consist of three (3) 1-hour tests following EPA Reference Methods 1-4, 7E, 10, and 25.

   A test protocol shall be submitted to this office for review and approval prior to testing. Notification of the test date shall be provided to the Division fifteen (15) days prior to testing. Results shall be submitted to this Division within 45 days of completion.

9. That emissions from the Heat Medium Heater shall be limited to the following:

Pollutant	lb/MMBtu	lb/hr	tpy
NO_x	0.03	2.7	7.9
CO	0.08	7.5	22.3
VOC	0.0055	0.5	1.5

10. That the Heat Medium Heater shall be limited to 583.1 MMscf/year of fuel usage. Cimarex Energy Company shall install, maintain, and operate a fuel meter(s) with a continuous recording device(s) on the Heat Medium Heater. The fuel meter(s) and recording device(s) shall be maintained per manufacturer's specifications. Cimarex Energy Company shall keep and maintain records of the fuel usage of the Heat Medium Heater.

11. That Cimarex Energy Company shall follow the testing requirements as follows for the Heat Medium Heater:

    a. Annually, the Heat Medium Heater shall be tested to verify compliance with the NO_x and CO limits set forth in this permit. The first annual tests are required the following calendar year after completion of the initial performance tests. Testing shall be conducted using EPA Reference Methods or a portable analyzer, following the State of Wyoming's Portable Analyzer Protocol. Notification of the test date shall be provided to the Division fifteen (15) days prior to testing. A written report of the results is to be submitted to the Division within 45 days of completion.

    b. The Air Quality Division shall be notified within 24-hours of the heat medium heater where the testing/monitoring required by (a) of this condition shows operation outside the permitted emission limits. By no later than seven (7) calendar days of such testing/monitoring event, the owner or operator shall repair and retest/monitor the affected heater to demonstrate that the heater has been returned to operation within the permitted emission limits. Compliance with this permit condition regarding repair and retesting/monitoring shall not be deemed to limit the authority of the Air Quality Division to cite the owner or operator for an exceedance of the permitted emission limits for any testing/monitoring required by (a) of this condition which shows noncompliance.

12. That the emergency generator engine for the Riley Ridge Plant shall be less than or equal to 800 horsepower and limited to the following:

    a. Tier II certified diesel engine (≥750 hp)
    b. Tier III certified diesel engine (<750 hp)
    c. Propane fired engine equipped with an air fuel ratio controller and a NSCR catalyst

    Cimarex Energy Company shall notify the Division of the engine type installed for the emergency generator within fifteen (15) days of installation. Such notification shall be submitted on a complete Engine Installation/Removal form. The form can be downloaded from the Air Quality website http://deq.state.wy.us/aqd or obtained from the Air Quality Division.

13. Cimarex Energy Company shall maintain documentation that the emergency generator engine is Tier II certified if a diesel fired unit greater than or equal to 750 horsepower is installed. If a diesel fired unit less than 750 horsepower is installed Cimarex Energy Company shall maintain documentation that the emergency generator engine is Tier III certified.

14. That the propane generator shall be limited to the horsepower and g/hp-hr limits in the table. Emission limits for NO_x, CO, and VOCs on a pound per hour basis are established based on the g/hp-hr limits and the engine information submitted in the Engine Installation/Removal form required by Condition 12 of this permit. Compliance with the g/hp-hr limit is presumed to demonstrate compliance with the lb/hr limit as long as the engine is operated within the horsepower reported in the Engine Installation/Removal form.

hp	NO_x g/hp-hr	CO g/hp-hr	VOC g/hp-hr
Max. 800	1.0	2.0	0.7

15. The emergency generator engine installed under Condition 12 shall be limited to 100 hours of operation per year. Cimarex Energy Company shall install and maintain an hour meter on the engine to demonstrate compliance with the hours limit in this condition. A record of hours of operation for the generator shall be maintained for a period of at least five (5) years and shall be made available to the Division upon request.

16. That for the emergency generator engine installed under Condition 12, Cimarex Energy Company shall operate and maintain the engine, air pollution control equipment, and monitoring equipment according to good air pollution control practices at all times, including startup, shutdown, and malfunction. Records of any maintenance or corrective actions shall be kept and maintained for a period of five (5) years and shall be made available to the Division upon request.

17. That H_2S emissions during power failures or upset conditions shall be controlled by the emergency flare.

18. Cimarex Energy Company shall keep and maintain records of flaring events at the Riley Ridge Plant. These records shall include:

    a. flaring events associated with malfunctions, maintenance, and/or adjustments of the compression equipment
    b. the duration of flaring events
    c. the amount of gas flared during the event
    d. the reason for the flaring event

19. Cimarex Energy Company shall maintain and operate the emergency flare during all period of active operation such that the controls remain effective as viable emission control device.

20. The emergency flare shall be designed, constructed, operated and maintained to be smokeless per Chapter 3, Section 6 (b)(i) of the WAQSR, with no visible emissions except for periods not to exceed a total of five (5) minutes during any two (2) consecutive hours as determined by 40 CFR, part 60, appendix A, Method 22.

21. The presence of the emergency flare pilot flame shall be monitored using a thermocouple and continuous recording device or any other equivalent device to detect and record the presence of the flame. Records shall be maintained noting periods during active operation when the pilot flame is not present.

22. Emission control equipment, all vent lines, connections, fittings, valves, relief valves, hatches or any other appurtenance employed to contain and collect vapors and transport them to the emission control system or device, shall be maintained and operated during any time the facility is operating such that the emissions are controlled at all times. Records shall be maintained noting dates and durations of times during such operation when any control system or device or the associated containment and collection equipment is not functioning to control emissions as required by this permit.

23. That fugitive VOC emissions shall be limited to 12.2 tpy from the Riley Ridge Plant.

24. Cimarex Energy Company shall utilize a LDAR program in accordance with 40 CFR part 60, subpart VVa. Monitoring under the LDAR program shall be conducted a minimum of every six (6) months. Records of monitoring and repair measures shall be kept for a period of at least 5 years and shall be made available to the Division upon request.

25. Cimarex Energy Company shall submit by March 1 of each calendar year a report on actual VOC, NO_x and SO_2 emissions for the facility for the previous year. This report shall include the following:

    1. Fugitive: VOC emissions shall be calculated using the methodology in the permit application, and the average measured leak detection rates for the past calendar year.
        a. Total fugitive VOC emissions for the facility in tons per year
        b. Average leak detection rate by equipment in ppm (equipment as defined in 40 CFR part 60, subpart VVa)
        c. Documentation of fugitive VOC emission calculations
    2. Heat Medium Heater: VOC and NO_x emissions shall be calculated based on actual fuel usage (MMBtu/yr) and the annual test results (lb/MMBtu)
        a. Total VOC and NO_x emissions in tons per year
        b. Actual fuel usage MMSCF/yr
        c. Average Heat Content
    3. Flare: SO_2 emissions calculated based on the amount of gas flared and the average H_2S Content
        a. Total SO_2 emissions in tons per year
        b. Summary of information required by Condition 18 of this permit

26. Cimarex Energy Company shall comply with the applicable requirements of 40 CFR part 60, subpart Dc for the Heat Medium Heater.

27. Cimarex Energy Company shall comply with the applicable requirements of 40 CFR part 60, subpart IIII for the emergency generator engine.

28. Cimarex Energy Company shall comply with the applicable requirements of 40 CFR part 60, subpart JJJJ for the emergency generator engine.

29. Cimarex Energy Company shall comply with the applicable requirements of 40 CFR part 60, subpart Kb for the methanol storage tank.

30. Cimarex Energy Company shall comply with the applicable requirements of 40 CFR part 63, subpart ZZZZ for the emergency generator engine.

31. That all records required by this permit shall be kept for a period of at least 5 years and shall be made available to the Division upon request.

32. That Cimarex Energy Company shall replace the Caterpillar 3408 Tier 0 (SN 4999) engine owned by Teletractors Incorporated with a Caterpillar 3408 Tier 3 engine. The engine replacement and Teletactors Incorporated air quality permit CT-4401 shall be modified to reflect the engine replacement prior to startup notification, under Condition 5 of this permit, for the Riley Ridge Plant. Cimarex Energy Company shall provide notification within 15 days of replacement of the Caterpillar 3408 Tier 0 (SN 4999) engine.

33. That Cimarex Energy Company shall replace the gas driven pneumatic pumps with electric pumps at the following facilities: Birch Creek Unit 98, Birch Creek Unit 108, Birch Creek Unit 116, Birch Creek Unit 117, Birch Creek Unit 129, Birch Creek Unit 130, Birch Creek Unit 133, Birch Creek Unit 138, Birch Creek Unit 140, Birch Creek Unit 141, Birch Creek Unit 149, Birch Creek Unit 191, Birch Creek Unit 192, LaBarge Unit 27, LaBarge Unit 28A, LaBarge Unit 35, and LaBarge Unit 38. The pneumatic pump replacements and Chevron USA air quality permits wv-KX9, wv-ZQ1, wv-UT2, wv-YU2, wv-1885, wv-8E2, wv-0401, wv-4566, and wv-3404 shall be modified to reflect the pneumatic pump replacement prior to startup notification, under Condition 5 of this permit, for the Riley Ridge Plant. Cimarex Energy Company shall provide notification within 15 days of replacement of the pneumatic pump(s) at each facility.

It must be noted that this approval does not relieve you of your obligation to comply with all applicable county, state, and federal standards, regulations or ordinances. Special attention must be given to Chapter 6, Section 2 of the Wyoming Air Quality Standards and Regulations, which details the requirements for compliance with conditions 3, 5, 6 and 7. Any appeal of this permit as a final action of the Department must be made to the Environmental Quality Council within sixty (60) days of permit issuance per Section 16, Chapter I, General Rules of Practice and Procedure, Department of Environmental Quality.

If we may be of further assistance to you, please feel free to contact this office.

Sincerely,

David A. Finley
Administrator
Air Quality Division

John V. Corra
Director
Dept. of Environmental Quality

cc: Tony Hoyt

Table I
Riley Ridge Plant
Facility Emissions

Emission Unit	NO_x		CO		VOC		SO_2		PM_{10}	
	lb/hr	tpy	lb/hr	tpy	lb/hr	tpy	lb/hr	tpy	lb/hr	tpy
Heat Medium Heater	2.7	7.9	7.5	22.3	0.5	1.5	0.1	0.2	--	--
Emergency Generator (worst case)	8.5	0.4	4.6	0.2	--	--	--	--	0.3	<0.1
Emergency Flare	<0.1	<0.1	<0.1	0.1	<0.1	<0.1	--	--	--	--
Tanks	--	--	--	--	<0.1	<0.1	--	--	--	--
Fugitives [1]	--	--	--	--	2.8	12.2	--	--	--	--
Facility Total	**11.2**	**8.3**	**12.1**	**22.6**	**3.3**	**13.7**	**0.1**	**0.2**	**0.3**	**<0.1**

[1] Methanol emissions (HAPs) are estimated to be 4.0 tpy of the fugitive emissions.

IN THE MATTER OF A PERMIT APPLICATION (AP-8093) FROM CIMAREX ENERGY COMPANY TO CONSTRUCT THE RILEY RIDGE GAS PLANT LOCATED IN SUBLETTE COUNTY, WYOMING

DECISION

I. Introduction

The Air Quality Division received a permit application from Cimarex Energy Company on July 28, 2008 to construct the Riley Ridge Plant for methane and helium recovery. The facility will be capable of processing 200 MMscfd of gas produced from wells comprised primarily of carbon dioxide (CO_2), nitrogen (N_2), methane (CH_4), helium (He), and hydrogen sulfide (H_2S). Nearly all of the CO_2 and H_2S will be extracted and injected back into the producing reservoir, the nitrogen will be extracted and vented to the atmosphere and the helium and methane will be recovered and sold. Facility equipment will include a heat medium heater, electrical compression, propane refrigerant, a diesel or propane fired auxiliary electrical generator and an emergency flare. The Riley Ridge Plant is located in Section 16, T29N, R114W, approximately sixteen (16) miles west-southwest of Big Piney, in Sublette County, Wyoming.

The Division conducted an analysis of this application and on April 16, 2009, published in the Pinedale Roundup, in Pinedale, Wyoming, a public notice and notice of public hearing of the proposed intent to approve the application. A copy of the application and Division's analysis was placed in the office of Sublette County Clerk in accordance with regulations. The public notice period ran from April 16, 2009 to May 18, 2009 and a public hearing was held on May 18, 2009, at the Marbleton Town Hall, located at 10700 Hwy 189, in Marbleton, Wyoming.

The Division received comments from the public during the public hearing on May 18, 2009 in Pinedale and during the public comment period. The comments received and responses to the comments are provided below.

II. Analysis of Public Comments:

II.1 **Interim Policy** – Comment was received that the application submitted by Cimarex fails to comply with the Division's Interim Policy for at least three reasons: 1) the Interim Policy forbids inter-company emission reductions like the kind proposed by Cimarex; 2) the application fails to provide assurances (i.e., a "demonstration") that emissions from the facility will in fact be offset and fails to provide a meaningful opportunity to review specific and detailed proposals for offsets; 3) Cimarex makes no effort to offset significant new emissions from other project components and activities such as well drilling, operation of pipelines and other project-related facilities and construction.

Response – 1) Section 4 of the Interim Policy states "No trading (i.e. inter-company emissions reductions) will be allowed". The prohibition on Inter-Company trading was not intended to restrict such trades, where companies involved in a trade can reach agreement on the value of any offset involved. Nor was the policy intended to prohibit new companies from operating in Sublette County. Given Cimarex Energy Company does not operate any other facilities in Sublette County and they have reached agreement with Teletractors and Chevron to obtain offsets, the Division accepted offsets obtained through inter-company trading for this permitting action. While the Interim Policy clearly states that it is not a regulation, the Division will be issuing a letter clarifying that a Chapter 6, Section 2 (c)(ii) Demonstration that involves emission

reductions obtained through inter-company trading will be considered on a case-by-case basis. The letter will be posted on our website upon issuance.

2) The Division has established federally enforceable permit conditions to ensure that the required VOC and NO_x offsets are obtained prior to the startup of the Riley Ridge Plant. Condition 31 (previously Condition 30) of the permit specifies the Tier 0 diesel engine must be replaced with a Tier 3 diesel engine and the Teletractors air quality permit modified prior to startup of the Riley Ridge Plant. Condition 32 (previously Condition 31) has been modified based on the information provided by Cimarex (Attachment A). This condition requires replacement of seventeen (17) pneumatic pumps with electric pumps at Chevron's Birch Creek and Labarge units and the Chevron air quality permits are modified prior to startup of the Riley Ridge Plant.

3) The Division considered the emissions represented in Cimarex's application associated with the operation of the Riley Ridge Plant, and did not include emissions which are considered to be secondary emissions in determining the facility's potential to emit. In Chapter 6, Section 4 of the Wyoming Air Quality Standards and Regulations (WAQSR), a facility's potential to emit is defined as follows:

> *"Potential to emit" means the maximum capacity of a stationary source to emit a pollutant under its physical and operational design. Any physical or operational limitation on the capacity of the source to emit a pollutant, including air pollution control equipment and restrictions on hours of operation or the type or amount of material combusted, stored, or processed, shall be treated as part of its design if the limitation or the affect it would have on emissions is enforceable. Secondary emissions do not count in determining the potential to emit of a stationary source.*

In Chapter 6, Section 4 secondary emissions are defined as follows:

> *"Secondary emissions" means emissions which occur as a result of the construction or operation of a major stationary source or major modification, but do not come from the major stationary source or major modification itself. For the purposes of this section, secondary emissions must be specific, well defined, quantifiable, and impact the same general areas as the stationary source or modification which causes the secondary emissions. Secondary emissions include emissions from any offsite support facility which would not be constructed or increase its emissions except as a result of the construction or modification of the major stationary source or major modification. Secondary emissions do not include any emissions which come directly from a mobile source, such as emissions from the tailpipe of a motor vehicle or from a train.*

The Division considers well drilling and completions, pipeline construction and operation, electric transmission construction to be secondary emissions and not part of the Riley Ridge Plant. Therefore, Cimarex was not required to offset these emissions because they were not considered in the potential to emit for the Riley Ridge Plant.

II.2 **Impacts from accidental release** – Comment was received that the Division must evaluate the potential public health and safety impacts from the proposed project, including a comprehensive assessment of the consequences of an accidental release of hazardous chemicals, such as the release of hydrogen sulfide (H_2S), caused by equipment failure, failure of sequestration, human error, well blowouts, acts of terror, etc. In particular, the Division should require the applicant to explain how it intends to comply with the "general duty" provisions set forth in 112(r), and allow the public an opportunity to review and comment on the applicant's statements.

Response – The Division does not administer the provision under §112(r) of the Clean Air Act (CAA) in Wyoming. Therefore, the Division cannot require Cimarex to provide information required under §112(r) prior to issuing a permit.

II.3 **CO_2 and H_2S sequestration** – Comment was received that the Division should defer any further action on Cimarex's application pending the promulgation of rules by the EPA and by DEQ governing the injection of CO_2 and H_2S, and pending submittal of application by Cimarex for the necessary injection permits. Additionally, attachments were provided which include scoping comments provide to the Bureau of Land Management (BLM) on the Rand Butte Project.

Response – The Division does not have the authority to defer issuance of the air quality permit until other permits, not required by the WAQSR, are obtained. The Riley Ridge Plant complies with all applicable requirements of the WAQSR and, therefore, the Division is obligated under the Environmental Quality Act to grant the permit (W.S. 35-11-801).

II.4 **Aggregation** – Comment was received that the Riley Ridge Plant described in the public notice and analyzed by the Division is just one component of a much larger and more complex methane and helium recovery project named the Rand's Butte Project. Emissions from the project are much greater than the limited analysis of the Riley Ridge Plant, and emission offsets proposed by Cimarex don't come close to offsetting total project emissions. Emissions from the entire operation, including all its various components must be aggregated and offset by emission reductions elsewhere in order to avoid a significant increase in ozone forming pollutants. Further total project emissions must be aggregated for purposes of Title V and New Source Review.

Response – See response to Public Comment II.1 item 3 in regards to defining the potential to emit for the Riley Ridge Plant. Emission increases from any other sources that require an air quality permit will be addressed in the associated permitting action. Cimarex has addressed all emission sources associated with the Riley Ridge Plant in this permitting action.

III. Analysis of Comments from Cimarex:

III.1 **LDAR Monitoring Frequency** – Compliance Partners, Inc. (CPI) commented on behalf of Cimarex requesting that the minimum frequency under the LDAR program be changed to once annually instead of semi-annually.

Response – The minimum frequency under the LDAR program specified in the permit was established under BACT. Therefore, the Division has not revised the monitoring frequency in Condition 24 (proposed Condition 23). However, once Cimarex has completed at least two (2) years of monitoring the Division would be willing to discuss the possibility of revising the frequency based on monitored data.

III.2 **Annual Emission Inventory** – CPI commented on behalf of Cimarex requesting that the deadline for submitting the annual emission inventory be revised to March 1 instead of January 31 to be consistent with reporting requirements for major sources.

Response – Upon review of the conditions and the information required to be submitted the Division revised Condition 25 (proposed Condition 24) to require submittal of the annual emission inventory by March 1 of each year.

IV. Division

IV.1 Upon reviewing the proposed conditions it was noted that the permit did not include fugitive VOC limits. Based on the fact that the Division established VOC emission limits for the generator engines and heat medium heater the Division has included Condition 23 limiting fugitive VOC emissions to 12.2 tpy to be consistent.

IV.2 Upon reviewing the proposed conditions it was noted that the permit did not include the requirement to comply with the applicable requirements of 40 CFR part 63, subpart ZZZZ. EPA promulgated revisions to Subpart ZZZZ on January 18, 2008, which included area sources of HAPs. Therefore, the Division has included Condition 30 for compliance with Subpart ZZZZ.

V. Decision:

On the basis of comments received during the public comment period and at the public hearing, an analysis of those comments, and representations made by Cimarex Energy Company in the application, the Department of Environmental Quality has determined that the permit application filed by Cimarex Energy Company complies with all applicable Wyoming Air Quality Standards and Regulations and that a permit will be issued to Cimarex Energy Company allowing construction of Riley Ridge Plant as described in the application. All of the conditions proposed in the Division's analysis will be included in the permit with the following changes and additions:

1. The Division has included as a condition of the permit (Condition 23) a limit on fugitive VOC emissions. (See response to Division Comment IV.1)

2. The Division has included as a condition of the permit (Condition 30) a requirement to comply with the applicable requirements of 40 CFR part 63, subpart ZZZZ. (See response to Division Comment IV.2)

3. The Division has revised Condition 25 (proposed Condition 24) to change the submittal date of the annual emissions inventory from January 31 to March 1 of each year. (See response to Cimarex Comment III.2)

4. The Division has revised Condition 32 (proposed Condition 30) to include a notification within 15 days of replacement of the Tier 0 engine. (See Public Comment II.1)

5. The Division has revised Condition 33 (proposed Condition 31) to indicate the equipment to be replaced at the respective facilities and permits which are to be modified prior to startup of the Riley Ridge Plant. The Division has also included a requirement for notification of replacement of the respective equipment at each facility within 15 days of replacement. (See Public Comment II.1)

Dated this 18th day of June, 2009

David A. Finley
Administrator
Wyoming Air Quality Division

John V. Corra
Director
Wyoming Department of Environmental Quality

Attachment A
Cimarex Letter

Cimarex Energy Co.
15 East 5th Street
Suite 1000
Tulsa, Oklahoma 74103-4346
PHONE 918.585.1100
FAX 918.585.1133

June 2, 2009

Mr. Chad Schlichtemeier
Wyoming Department of Environmental Quality
Division of Air Quality
122 W. 25th Street
Herschler Bldg 2E
Cheyenne, WY 82002

JUN 2009
RECEIVED
AIR QUALITY
DIVISION

RE: Riley Ridge Air Permit (AP-8093) Discussion

Mr. Schlichtemeier,
Cimarex Energy Co. is responding to your request for additional information since our public hearing on May 18, 2009. This letter addresses emissions offsets and public comments for permit approval.

Emissions Offsets
Cimarex Energy Co. has completed additional work with Chevron U.S.A. Inc and identified specific sources to be used to offset VOC emissions for the Riley Ridge plant. The VOC offsets will be gained by converting 17 pneumatic pumps at Chevron's Birch Creek and Labarge Units to electric driven pumps. The attached documents provide facility identification, pump model, pump use description, applicable WDEQ permit number, and the VOC emissions gained by each pump. Gas compositions are also attached for each pneumatic pump currently in use and these compositions provide the data used in the calculations to determine the VOC's being emitted.

The NOx Offsets with Teletractors Incorporated are specified with previous documentation.

All NOx and VOC emissions offsets will be in place prior to plant startup.

Public Comments
Cimarex Energy Co. understands air quality in Sublette County is very important and our Riley Ridge plant design demonstrates our commitment to minimize environmental impacts. Cimarex is not aware of any negative concerns related to air emissions that we have not addressed.

Permit Approval
Cimarex has work restrictions imposed between the winter months of November through May of each year. One month in our current work season has passed and Cimarex is eager to begin earthwork as soon as possible. Please advise if any additional data is required. Otherwise, we respectfully request permit approval as soon as possible.

Please contact me with any questions @ (918) 295-1667.

Sincerely,

Clay Duellman
Special Projects Manager

CC: Mr. Gary McFadden, Compliance Partners
Mr. Patrick Shevlin, Chevron U.S.A. Inc.

CIMAREX-Offsets: Pneumatic Pump Replacement Schedule

No#	Facility ID	Date	TPY	Permit	Description
1	BCU 98		0.54	AP-KX9	Texsteam 3701 methanol pump
2	BCU 108		0.54	AP-KX9	Texsteam 3701 methanol pump
3	BCU 116		0.54	AP-KX9	Texsteam 3701 methanol pump
4	BCU 117		0.54	AP-ZQ1	Texsteam 3701 methanol pump
5	BCU 129		1.1	AP-KX9	Wilden Heat Trace Pump
6	BCU 130		0.54	AP-KX9	Texsteam 3701 methanol pump
7	BCU 133		0.54	AP-KX9	Texsteam 3701 methanol pump
8	BCU 138		1.1	WV-UT2	Wilden Heat Trace Pump
9	BCU 140		0.54	AP-KX9	Texsteam 3701 methanol pump
10	BCU 141		0.54	AP-KX9	Texsteam 3701 methanol pump
11	BCU 149		0.54	WV-YU2	Texsteam 3701 methanol pump
12	BCU 191		1.1	WV-1885	Wilden Heat Trace Pump
13	BCU 192		1.1	WV-1855	Wilden Heat Trace Pump
14	LBU 27		1.1	AP-8E2	Wilden Heat Trace Pump
15	LBU 28A		1.1	AP0-401	Wilden Heat Trace Pump
16	LBU 35		1.1	WV-4566	Wilden Heat Trace Pump
17	LBU 38		1.1	WV-3404	Wilden Heat Trace Pump
		Total	13.66		

BCU = Birch Creek Unit
LBU = Labarge Unit

Pneumatic Calculations

Birch Creek 149 Sample

	Mol %	mw	Mol % x MW	Wt %
carbon dioxide	0.59%	44.01	0.2608913	1.4164%
nitrogen	0.67%	28.01	0.1878631	1.0199%
methane	89.47%	16.04	14.350796	77.9104%
ethane	5.69%	30.07	1.7102613	9.2850%
propane	2.19%	44.1	0.9653931	5.2411%
isobutane	0.35%	58.12	0.2032456	1.1034%
butane	0.50%	58.12	0.2897282	1.5729%
isopentane	0.14%	72.15	0.1014429	0.5507%
pentane	0.12%	72.15	0.0847041	0.4599%
n-hexanes	0.04%	86.16	0.0337747	0.1834%
other hexanes	0.10%	86.16	0.084523	0.4589%
heptanes	0.10%	100.2	0.1011018	0.5489%
C8+ heavies	0.01%	114.23	0.014393	0.0781%
benzene	0.01%	78.11	0.0067175	0.0365%
toluene	0.02%	92.13	0.016307	0.0885%
ethylbenzene	0.00%	106.17	0.000637	0.0035%
xylenes	0.00%	106.17	0.003716	0.0202%
Trimethly	0.00%	114.24	0.0041126	0.0223%
Totals	100.00%			100.00%
VOC (C3+)	3.58%			10.3683%
HAPs (Total)	0.07%			0.35%

Stream Mol Wt = 18.419608

Wilden Pump (PX200 spec sheet)

X Factor setting, based on Ops input	1		
"X Factor", air @ 48 psig	0.08		
"X Factor", flow @ 48 psig	0.12		
Actual Flow rate	1	gpm	
Equivalent Flow Rate at Setting 4	8.3	gpm	
Air Consumption, Setting 4 Performance Curve	10	SCFM	
Air Consumption, Setting 1	0.8	SCFM	
Vented SCF / year (8760 hr) =	420,480		
Vented lb-mol/yr (@379.7 SCF/lb-mol) =	1107.40		
Total emissions, lb-mol x lb/lb-mol (lb/yr) =	20,398		
VOC, total x wt% VOC (lbs/yr) =	2,115	or	1.06 TPY
HAPs, total x wt% HAP (lbs/yr) =	72.27	or	0.04 TPY

Texsteam Pump Calculator

Birch Creek 149 Sample

	Mol %	mw	Mol % x MW	Wt %
carbon dioxide	0.59%	44.01	0.2608913	1.4164%
nitrogen	0.67%	28.01	0.1878631	1.0199%
methane	89.47%	16.04	14.350796	77.9104%
ethane	5.69%	30.07	1.7102613	9.2850%
propane	2.19%	44.1	0.9653931	5.2411%
isobutane	0.35%	58.12	0.2032456	1.1034%
butane	0.50%	58.12	0.2897282	1.5729%
isopentane	0.14%	72.15	0.1014429	0.5507%
pentane	0.12%	72.15	0.0847041	0.4599%
n-hexanes	0.04%	86.16	0.0337747	0.1834%
other hexanes	0.10%	86.16	0.084523	0.4589%
heptanes	0.10%	100.2	0.1011018	0.5489%
C8+ heavies	0.01%	114.23	0.014393	0.0781%
benzene	0.01%	78.11	0.0067175	0.0365%
toluene	0.02%	92.13	0.016307	0.0885%
ethylbenzene	0.00%	106.17	0.000637	0.0035%
xylenes	0.00%	106.17	0.003716	0.0202%
Trimethly	0.00%	114.24	0.0041126	0.0223%
Totals	100.00%			100.00%
VOC (C3+)	3.58%			10.3683%
HAPs (Total)	0.07%			0.35%

Stream Mol Wt = 18.419608

Texsteam 3701 Series Pumps

Dischrarge Pressure, typical ~85 psig	100	psig
Gallons of methanol pumped per year	550	gal
SCF gas comsumption per gallon (spec sheet)	390	
Vented SCF / year (8760 hr) =	214,500	
Vented lb-mol/yr (@379.7 SCF/lb-mol) =	564.92	
Total emissions, lb-mol x lb/lb-mol (lb/yr) =	10,406	
VOC, total x wt% VOC (lbs/yr) =	1,079	or 0.54 TPY
HAPs, total x wt% HAP (lbs/yr) =	36.87	or 0.02 TPY

Department of Environmental Quality

To protect, conserve and enhance the quality of Wyoming's environment for the benefit of current and future generations.

Dave Freudenthal, Governor

John Corra, Director

June 18, 2009

Re: Air Quality Permit CT-8093
Cimarex Energy Company
Permit Application AP-8093

Dear Commenter:

Enclosed is a copy of the air quality permit referenced above to construct the Riley Ridge Plant for methane and helium recovery. The facility will be capable of processing 200 MMscfd of gas produced from wells comprised primarily of carbon dioxide (CO_2), nitrogen (N_2), methane (CH_4), helium (He), and hydrogen sulfide (H_2S). Nearly all of the CO_2 and H_2S will be extracted and injected back into the producing reservoir, the nitrogen will be extracted and vented to the atmosphere, and the helium and methane will be recovered and sold. Facility equipment will include a heat medium heater, electrical compression, propane refrigerant, a diesel or propane fired auxiliary electrical generator and an emergency flare. The Riley Ridge Plant is located in Section 16, T29N, R114W, approximately sixteen (16) miles west-southwest of Big Piney, in Sublette County, Wyoming.

Comments received during the public comment period and hearing were considered in the final permit. A copy of the decision document for this permit is included. A new condition has been added and proposed conditions have been modified in the final permit. Below is a summary of the changes.

- Condition 23 (new) establishing a VOC limit for fugitive emissions.
- Condition 25 (revised) changed to the submittal of the annual emissions inventory from January 31 to March 1 of each year.
- Condition 30 (new) to comply with applicable requirements of 40 CFR part 63, Subpart ZZZZ.
- Condition 32 (revised) to include a notification within 15 days of replacement of the Tier 0 engine.
- Condition 33 (revised) to indicate the equipment to be replaced at the respective facilities and permits which are to be modified prior to startup of the Riley Ridge Plant. The Division has also included a requirement for notification of replacement of the respective equipment at each facility within 15 days of replacement.

If we may be of further assistance to you, please feel free to contact this office.

Sincerely,

David A. Finley
Administrator
Air Quality Division

cc: Tony Hoyt
Clay Duellman, Cimarex Energy Company

Enclosures

Appendix E
Cimarex Protection Plans

Cimarex Energy Company
Riley Ridge Project
Public Protection Plan
4/18/08, Rev 1

The Public Protection Plan (Plan) is required for drilling/completion/workover operations on the Riley Ridge Wells. This Plan is prepared due to the Hydrogen Sulfide (H_2S) concentrations as seen in the Riley Ridge Federal #10-14 gas analysis. This Plan has been prepared per the Bureau of Land Management (BLM) Onshore Oil & Gas Order No. 6, Hydrogen Sulfide Operations, effective 1/22/1991.

Riley Ridge Federal #10-14 gas analysis data is published in the BLM database and shown in Attachment #1. The average concentrations of the major components are H_2S (4.6%), Helium (0.5%), Methane (18.4%), Nitrogen (10.1%), and CO_2 (66.3%).

In Attachment #2, calculations were made using the Pasquill -Gifford derived equation from BLM Order No. 6 for the 500 ppm ROE and the 100 ppm ROE. Both were greater than 3,000 feet for a gas rate of 120,000,000 scfd. Attachment #3 is an aerial map with the 500 ppm ROE and 100 ppm ROE circles. The West to East prevailing winds are shown on Attachment #4 as noted by the surveyor on 11/8/07.

From the aerial photo with the 500 ppm ROE and 100 ppg ROE, there are no areas of high population density, and no schools shown. **One private dwelling and multiple business buildings are shown.** There are county maintained roads, recreational areas, and other areas where the public might reasonably be expected to frequent. **Pamela Hilton's ranch home is seen off South Piney Road.** The ExxonMobil Lake Ridge Unit falls in the 100 ppm ROE with wellsites and buildings.

This Plan provides details of actions to alert and protect the public in the event of an H_2S release of a potentially hazardous volume. This Plan shall be submitted to the BLM as part of the Riley Ridge #20-14 Application for Permit to Drill (APD).

This Plan shall be maintained and updated on annual basis and a copy of any revisions shall be submitted to the BLM authorized officer upon request. Copies of this Plan will be available at the drilling/completion site from the Cimarex Well Site Supervisor. Other copies may be found on location with the Drilling Contractor's wellsite superintendent and other onsite vendors.

This Plan shall be activated immediately upon detection of release of a potentially hazardous volume of H_2S. Any release of a potentially hazardous volume of H_2S shall be reported to the BLM authorized officer as soon as practicable, but no later than 24 hours following identification of the release.

To better inform the public, there may be public education seminars, mass alert

systems, and use of sirens, telephone, radio, and television. These steps may be taken due to the large area involved and the limited number of people at risk and their location with respect to the remote well site.

The Public Protection Plan includes the responsibilities and duties of key personnel, and instructions for alerting the public and requesting assistance as follows:

1. Initial **key personnel** will be identified prior to the start of location construction. A list will be generated along with the Drilling Program. Additional names and phone numbers will be added to the list during move in and rig up of the drilling equipment. Additional names and phone numbers will be added for specific site safety personnel prior to setting the intermediate casing.
2. All well **site workers** are responsible for notifying their immediate supervisor and the Cimarex Well Site Supervisor of any problems, emergency situations, or releases of gas from the well bore.
3. The various well **site supervisors** are responsible for notifying the Cimarex Well Site Supervisor.
4. The **Cimarex Well Site Supervisor** will notify his immediate supervisor, the Cimarex Field Drilling Superintendent. If the Field Drilling Superintendent is not available, contact the Drilling Superintendent or Cimarex Drilling Manager. The Cimarex Well Site Supervisor will contact location police, hospitals, and other law enforcement personnel. The Well Site Supervisor may call the various governmental agencies as requested by the Cimarex Field Drilling Superintendent or the Cimarex Drilling Superintendent. The Cimarex Well Site Supervisor will begin a timeline of events leading up to and the resolution of any incident.
5. **Cimarex Field Drilling Superintendent** is responsible for contacting the Drilling Superintendent. If he is not available, contact the Cimarex Drilling Manager. He will review the timeline and include information when available.
6. **Cimarex Drilling Superintendent** is responsible for contacting the Cimarex Drilling Manager and the Cimarex ES&H personnel. He may initiate contact with the Bureau of Land Management within the first 24 hours of a release. He will continue to add to the Timeline of events and list of persons contacted.
7. **Cimarex Drilling Manger** will notify other Cimarex officials and advise of the situation. The Drilling Manager, Drilling Superintendent, Field Drilling Superintendent, and Well Site Supervisor will establish the protocol for contacting others.
8. Final assignment of personnel has not be made. The Cimarex **Drilling Manager** is **Steve Simonton**. It will be his responsibility to assign staff members to work on this project based on workload. The Cimarex **Drilling Engineers** are **Eddie Wright** and **Robert Huizenga**. The Cimarex **Drilling Superintendent** is **Larry Seigrist**.

Additional efforts will be made to identify and list any names and telephone numbers of

those responsible for safety of public roadways, and individuals responsible for the safety of occupants of any private buildings within the 100 ppm radius of exposure (ROE) as follows:

1. **Private Homes, Ranches, and Buildings**
    a. **Pamela C Hamilton, 441 South Piney Fish Creek Road, Big Piney, WY 83113 (307) 276-5424**
2. Private businesses
    a. ExxonMobil Corporation, 2515 Warren Ave., Cheyenne, WY 82001, (307) 638-0067
    b. Exxon Corp
        i. Big Piney, WY 83113, (307) 276-6200
        ii. 1482 County Road 23 134 LaBarge, WY 83123, (307) 386-2266, (307) 386-9283,
        iii. 911 Hogsback Ridge, LaBarge, WY 83123, (307) 386-2262, (307) 386-2263
        iv. 83374 US Highway 189, LaBarge, WY 83123, (307) 386-9285
3. Telephone numbers of those responsible for the safety of public roadways.
    a. Local Sheriff's Department, Big Piney, WY 83113, (307) 276-3554
    b. Sublette County Sheriff Emergency, 3512 S. Tyler Ave, Pinedale, WY 82941
    c. (307) 367-6593, (307) 367-2284
    d. State of Wyoming Transportation Department, 3200 Elk St., Rock Springs, WY 82901, (307) 352-3100
4. National Weather Service, 1800 Mount Airy, Pinedale, WY 82941, (307) 367-3201
5. A Call list with telephone numbers for requesting assistance from law enforcement, fire department, and medical personnel and Federal and State regulatory agencies, as required are:.
    a. Pinedale Fire Department, 130 S. Fremont Ave., Pinedale, WY 82941, (307) 367-4550
    b. Sublette County Firefighters, 12962 US Highway 191, Pinedale, WY 82941, (307) 859-8872
    c. Wyoming Range Medical, 307 Main St., Big Piney, WY 83113, (307) 276-4700
    d. Angel Worldwide Air Ambulance Medflight Service, (Attachment #5) info@angelmedflight.com , (877) 264-3570, fax (623) 910-4647
    e. Bureau of Land Management, 1625 Pine St., Pinedale, WY 8294, (307) 367-4358, (307) 367-6510, (307) 367-4359, (307) 367-4350
        i. Mike McLaren, Field Office Petroleum Engineer, (307) 367-5380, fax (307) 367-5329, cell (307) 360-6974
    f. Wyoming Oil & Gas Conservation Commission, 2211 King Blvd., Casper, WY 82602, mailing address P.O. Box 2640, Casper, WY 82602, (307) 234-7147, fax (307) 234-5306
        i. After-Hours Emergency Contacts
            1. Mr. Don Likwartz, Oil & Gas Supervisor, (307) 237-4590

2. Mr. Rick Marvel, Engineering Manager, (307) 472-7401

g. Other names, addresses, and phone numbers will be identified and added.

Necessary information to be communicated and the emergency responses that may be required shall be listed on the Cimarex Incident Report Form. This form is found in Attachment #6, Cimarex Environmental Safety & Health (ES&H) Manual. Individual governmental agencies and other regulatory agencies will be contacted and their appropriate forms will be added to this Plan prior to the start of location construction.

These following items are covered by the Cimarex ES&H Manual issued October 2007 with a specific section for Accident and Incident Investigations (pg 21) and Hydrogen Sulfide (H_2S) Safety Program (pg 33). Advance briefings, by visit, meeting or letters may be prepared and conducted to provide additional explanation and information on the following items:

- Hazards of H_2S and SO_2;
- Necessity for an emergency action plan;
- Possible sources of H_2S and SO_2;
- Instructions for reporting a leak to the operator;
- The manner in which the public shall be notified of an emergency; and
- Steps to be taken in case of an emergency, including evacuation of any people;

The Cimarex Well Site Supervisor or his on site supervisor has the authority to ignite the escaping gas. He will determine when, how, and by whom the gas may be ignited. Site specific equipment and operating plans will be provided by the selected vendor for this specialized equipment and training.

The Cimarex Well Site Supervisor will be responsible to initiate the Plan and take any additional measures necessary following the release ofH_2S and SO_2 until the release is contained are as follows:

- Monitoring of H_2S and SO_2 levels and wind direction in the affected area;
- Maintenance of site security and access control; and
- Other necessary measures as required by the BLM authorized officer
- The site specific vendor(s) assigned the responsibility of providing monitoring equipment, site security and access control will provide training and explanation of the appropriate steps required for monitoring equipment, site security, and access control.

Revisions and updates to this Plan will be numbered and dated. Meeting and/or training will be provided to site workers, law enforcement, fire departments, sheriff's department(s) and other visitors/casual access controlled to

Attachment #1 - Riley Ridge Federal #10-14 - Average Gas Analysis

BLM - AMARILLO FIELD OFFICE

QUAD H GAS CHROMATOGRAPHIC ANALYSIS

COMPANY NAME: WOLD OIL PROPERTIES
WELL NAME: RILEY RIDGE FEDERAL 10-14
DATE COLLECTED: 060924
LAB NUMBER: FS-21566
SAMPLED BY: R. KING
DATE ANALYZED: 061005
#, CO, ST, SEC
T&R: SUBLETTE WY 10 T29N R114W
API #, LAT, LONG: 49035206030051 N42.5066409° W-110.4130952°
"UNNAMED" FIELD, MADISON FORMATION, SE SW SW SPOT, 16160 ft DEEP, 15712-15762 ft DEPTH, 8555 ft KB ELEVATION, DEVONIAN-UPPER DEVONIAN AGE

Component	Average	Std. Dev.
Hydrogen	0.16	0.001
Helium	0.53	0.001
Methane	17.16	0.004
Nitrogen	7.33	0.002
Ethane	0.01	0.000
Oxygen	0.00	0.000
H2S	1.34	0.008
Argon	0.05	0.000
CO2	73.28	0.001
Propane	0.00	0.000
I-Butane	0.13	0.003
N-Butane	0.00	0.000
I-Pentane	0.00	0.000
N-Pentane	0.00	0.000
Hexanes+	0.02	0.000
Btu	188.00	0.000
Sp. Gr.	1.300	0.000

ExxonMobil Production Company, U.S. Production
LaBarge Operations, Shute Creek Laboratory, Lincoln County, WY

Product Analyst: C.F. Conroy Analysis Date: 10/29/2006

Norm%	He	Ar	N2	CH4	CO2	C2H6	H2S	COS
RUN 1	0.5198	0.0620	10.1338	18.5222	66.2339	0.0123	4.4836	0.0324
RUN 2	0.5228	0.0563	10.0951	18.4806	66.2198	0.0123	4.5791	0.0320
RUN 3	0.5202	0.0580	10.0622	18.4275	66.2789	0.0114	4.5078	0.0340
RUN 4	0.5256	0.0584	10.0652	18.4345	66.2759	0.0111	4.5987	0.0327
RUN 5	0.5242	0.0580	10.0763	18.4492	66.2010	0.0124	4.6463	0.0328
AVG. 3-5	0.523	0.058	10.069	18.437	66.252	0.012	4.617	0.033
Norm%	He	Ar	N2	CH4	CO2	C2H6	H2S	COS

Sample Information:
Wold Oil Properties
Riley Ridge Fed. 10-14
SW SW Sec. 10 T29N R114W
Sublette County, WY
High Pressure Gas Sample
10/26/06 @ 16:30
Serial # HDF4 500
From: Test Separator Meter Run
Pressure: 530 PSI
Temp: 103 F
Taken By: Pure Energy Services LTD.
307-789-4227
Wold Company Rep: Rocky Moeller 307-389-4458
Formation: Madison

RILEY RIDGE UNIT
WYW109661X
Federal No. 10-14
WYW78475
SW SW Sec. 10 T29N R114W
630' FSL 827' FWL
Sublette County, Wyoming
8323' GL 8355' KB
API #49-035-20603

12/29/80	Spud by American Quasar.
10/31/81	Completed. 24" @ 40' GL. 16" 75/84# K55 @ 2017' w/ 1900 sks. DST #1 (2nd Frontier 7695'-7820') weak blow, lost pkr seat. Rec 93' GCM. 10-3/4" 55.7/60.7# L80/SS95 @ 10,956' w/ DV @ 4948'. Cmt 1st stage w/ 4500 sks & 2nd stage w/ 2800 sks. DST #2 (Phosphoria 13,970'-14,200') misrun. 7-5/8" 39# L80/SS95 liner 10,688'-15,195' cmt w/ 865 sks. Perf 11,380'. Sqz w/ 155 sks. Drill to 15,695'. Well blew out during fishing job. Control blow out and repair rig. Tie back 7-5/8" liner to surface w/ 7-5/8" 33.7/39# L80/SS95 set @ 10,697'. Cmt w/ 1868 sks. Perf csg @ 1800' w/ 2 shots. Cmt top of tie-back w/ 500 sks. Clean out to top of fish @ 14,475'. Tite spot 13,072'-13,077'. Attempt to recover fish (2 DC=s, jar bbl, JS, BS, bit). No success. Set Baker whipstock @ 15,078'. Cut window in 7-5/8" csg. Drill new 6-1/2" hole to TD 16,220'. Set 5" 18# L80 liner 10,561'-16,217', cmt w/ 500 sks. PBTD 16,200'. Displace hole w/ inhibited water. LD DP.
8/18/87	Change of operator to Wolverine Exploration.
9/24/93	MIT csg 1000 psig OK.
8/1/95	Change of operator to Wold Oil Properties, Inc.
10/4/05	MIT 7-5/8" csg 1000 psig OK. Witnessed by BLM.
11/6/06	Identify minor csg leak 1699'-2137', not repaired. Set pkr on work string @ 15,398', test csg 2500 psig OK. **Perf Madison 15,742'-62', 15,712'-22'** w/ 1spf. Liven well w/ CTU & N_2. Flow test, take gas samples. Run BHP survey, wireline parted. Attempt to fish wireline & bombs unsuccessful. Chase fish to 15,698'. Set CIBP on wireline @ 15,430', capped w/ 2 sks cmt. Run TCP perforating & pressure gauge assy, set pkr @ 15,237'. **Perf Madison 15,317'-37'** w/ 1spf. Flow test, take gas samples. TOH w/ perf assy. Set CIBP on wireline @ 15,215' capped w/ 2 sks cmt. Test csg to 2000 psig OK. Load hole w/ 9.2# inhibited KCl.

Attachment #2 - Radius of Exposure (ROE) Calculations

From BLM Onshore Order 6:

Radius of exposure means the calculation resulting from using the following Pasquill -Gifford derived equation, or by such other method(s) as may be approved by the authorized officer

1. For determining the 100 ppm radius of exposure where the H_2S concentration in the gas stream is less than 10 percent:

$$X = [\ (1.589)(H_2S\ \text{concentration})(Q)\ ]^{(0.6258)} \quad \text{or}$$

2. For determining the 500 ppm radius of exposure where the H2S concentration in the gas stream is less than 10 percent:

$$X = [\ (0.4546)(H_2S\ \text{concentration})(Q)\ ]^{(0.6258)}$$

Where:
X = radius of exposure in feet:
H_2S Concentration = decimal equivalent of the mole or volume fractions of H_2S in the gaseous mixture;
Q = maximum volume of gas determined to be available for escape in cubic feet per day (at standard condition of 14.73 psia and 60°F).

Escape rate means that the maximum volume (Q) used as the escape rate in determining the radius of exposure shall be that specified below, as applicable:

2. For gas wells, the escape rate shall be calculated by using the current daily absolute open flow rate against atmospheric pressure;
4. For a well being drilled in a developed area, the escape rate may be determined by using the offset wells completed in the interval(s) in question.

100 PPM ROE $X= [\ (1.589)(H_2S\ \text{concentration})(Q)\ ]^{(0.6258)}$

Q,scfd	40,000,000	80,000,000	120,000,000
H_2S	0.04617	0.04617	0.04617
X, feet	11,153	17,210	22,181
X, Miles	2.1	3.3	4.2

500 PPM ROE $X=[\ (0.4546)(H_2S\ \text{concentration})(Q)\ ]^{(0.6258)}$

Q,scfd	40,000,000	80,000,000	120,000,000
H_2S	0.04617	0.04617	0.04617
X, feet	5,096	7,864	10,136
X, Miles	1.0	1.5	1.9

Attachment #3 - Aerial View with ROE Circles

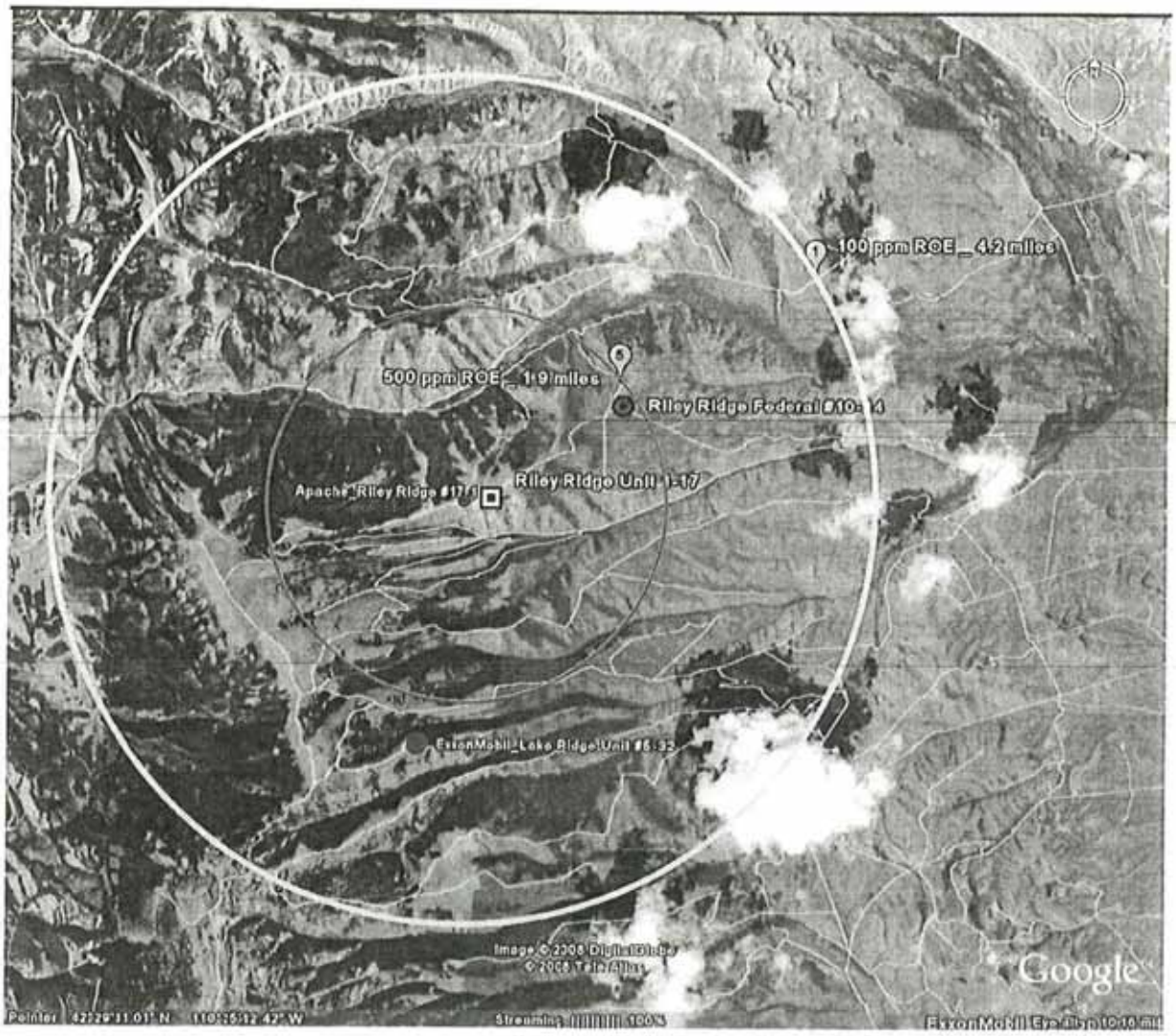

Prevailing winds are West to East as defined by the site survey company on 11/8/07.

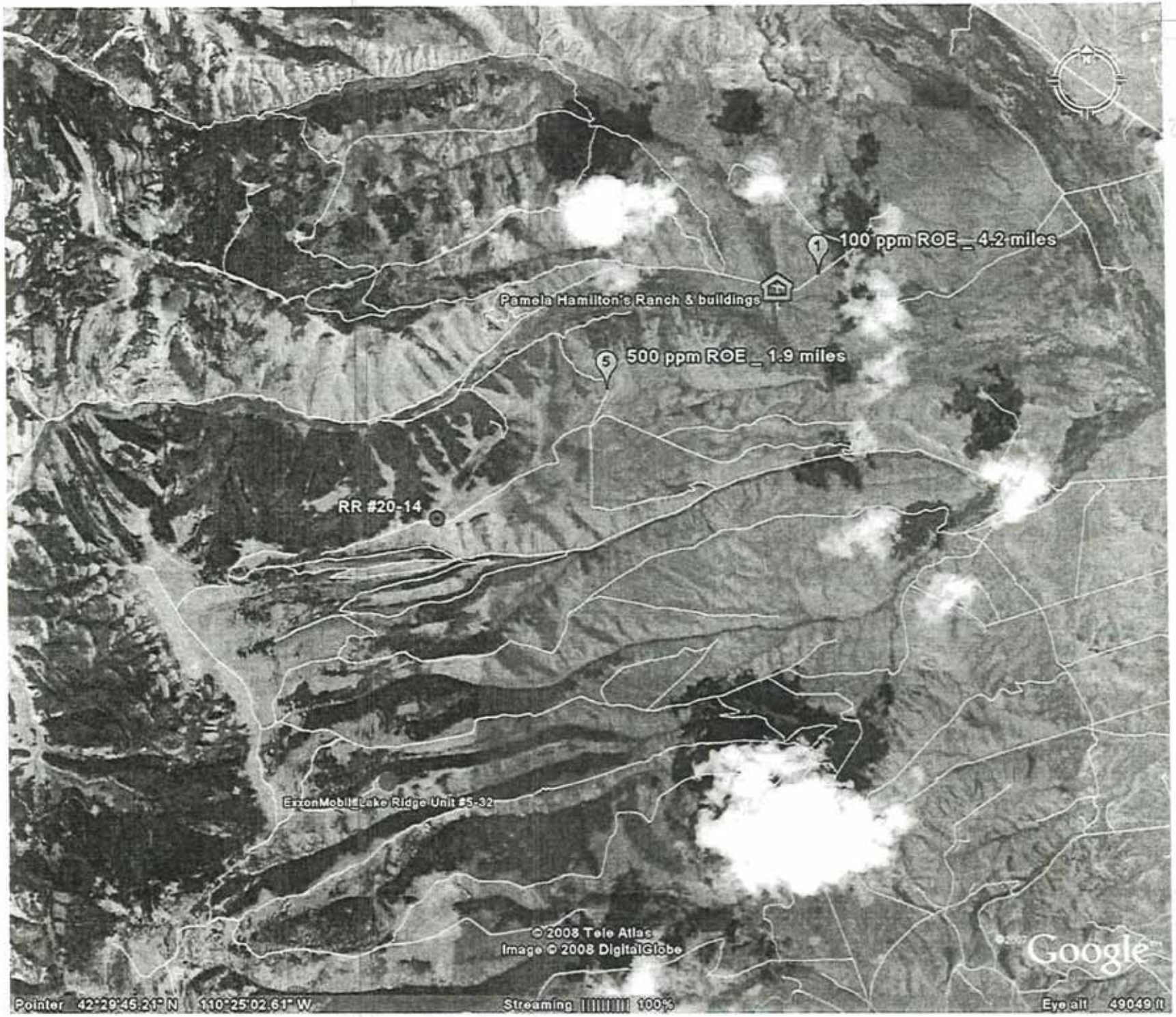
100 ppm ROE _ 4.2 miles
Pamela Hamilton's Ranch & buildings
500 ppm ROE _ 1.9 miles
RR #20-14
ExxonMobil Lake Ridge Unit #5-32
© 2008 Tele Atlas
Image © 2008 DigitalGlobe
Google
Pointer 42°29'45.21" N 110°25'02.61" W
Streaming 100%
Eye alt 49049 ft

Attachment #4 - Prevailing West to East Winds as noted by the surveyor on 11/8/07.

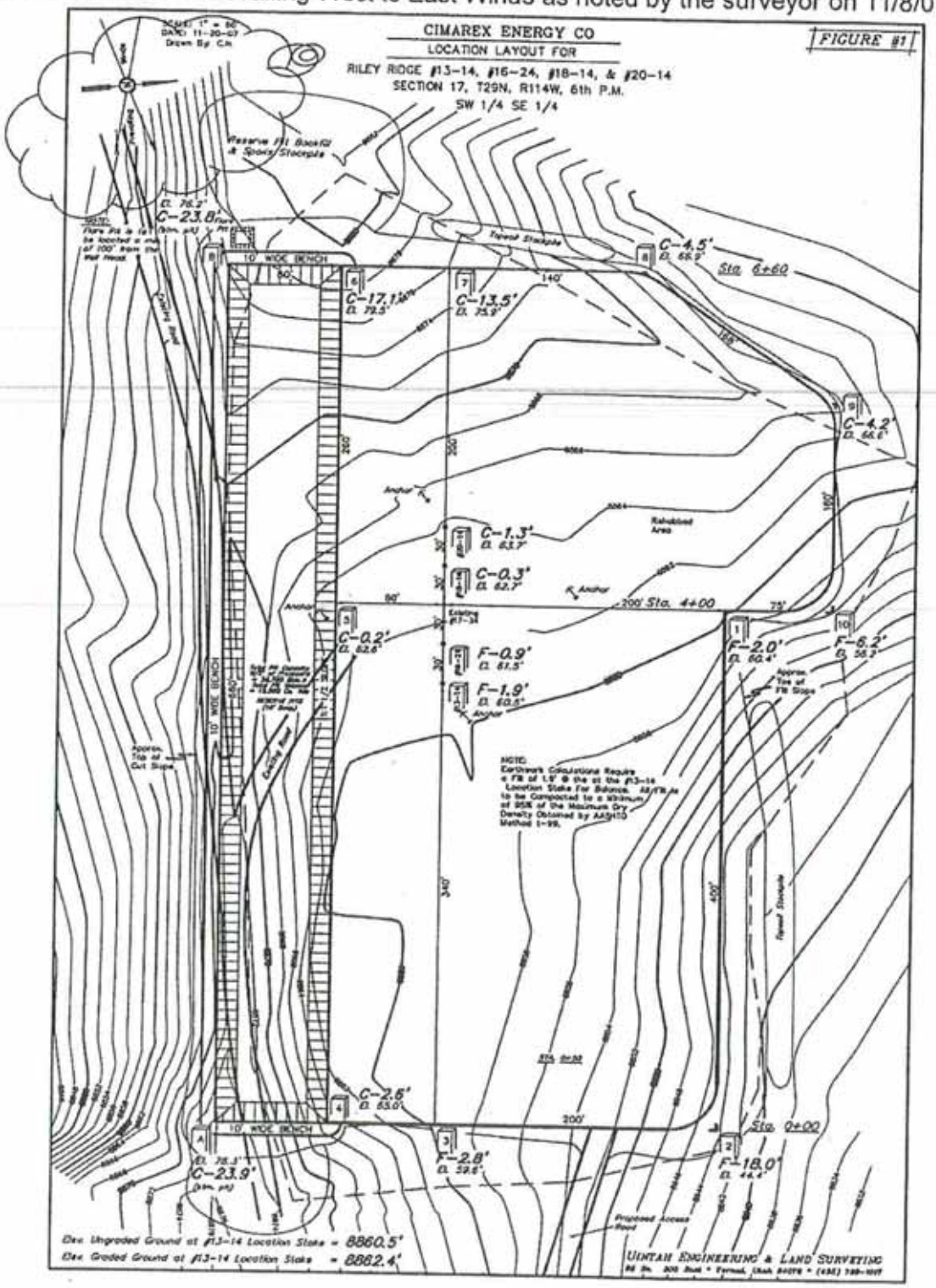

Attachment #5

Emergency Medical Assistanc

Angel Medflight
Worldwide Air Ambulance Service

877-ANGEL70
877-(264-3570)
888-883-9506 Fax
623-910-4647

info@angelmedflight.com

One Touch Promise

We take care of the patient, and everything else
When a patient needs a medical transport, only one touch of the phone is needed. Call **1-877-ANGEL70** and Angel Medflight will coordinate every aspect of patient transport.
Ground ambulance
We are the only air medical transport company in the country that will arrange ground ambulance whether in conjunction with or separate from an air transfer.
Air transportation
We utilize aircraft that are FAA Part 135 compliant. Gulfstream, Lear, King Air and other quality aircraft available.
Board certified, experienced medical staff
A minimum of 2 professional, experienced, top notch medical staff are by the patient's side at all times.
Coordination of receiving physicians & hospitals
We coordinate sending and receiving physicians and hospitals to ensure continuity of care. We arrange all the details, but case managers are always involved in the process.

Attachment #6 - Cimarex ES&H Manual

- Company Memorandum dated October 2006
- Introduction
- Employee Safety and Environmental Guidelines
- Supervisors (Area Superintendents, Supervisors & Foremen) Safety and Environmental Guidelines
- Company Safety and Environmental Guidelines and Goals
- Stop Program (Safety Training Observation Program)
- TIF (Think Incident Free) Program
- Accident and Incident Investigations
- Hydrogen Sulfide (H_2S) Safety Program

CIMAREX

To: All Cimarex Employees

Date: October 2007

Subject: Cimarex's Environmental, Safety and Health (ES&H) Manual

Oil and Gas operations by their very nature, involve potentially significant risks. With that in mind, safety is of critical importance. It is everyone's responsibility. All employees are responsible for their individual safety performance and the prevention of accidents. It is the responsibility of each employee to comply with safety guidelines and to work in such a manner as to prevent injuries to themselves and to others.

Each employee and supervisor has the responsibility to create a climate of safety awareness, to adopt safe work habits and practices, and to observe safety guidelines. Safety and loss prevention will be part of measuring performance when considering compensation, continued employment or promotions. Again, each employee shares in the responsibility for maintaining a safe and healthful work environment.

This safety manual sets forth safety guidelines that are to be followed by all company employees. While this manual and our STOP Program will help you recognize and avoid obvious hazards, it cannot cover all situations. When in doubt, consult your immediate supervisor and/or your ES&H Department.

The provisions set forth in this manual shall apply to operations conducted by Cimarex Energy Co. and its subsidiaries. Throughout this manual Cimarex may be referred to as "Company".

Joe Albi
Executive V.P. of Operations

Dick Dinkins
V.P. of Human Resources

Jerry Nagel
V.P. of Operations

Roger Burau
V.P. of Drilling

Bob Jennings
Manager of ES&H

Cimarex Energy Co.
Revised September 2007

INTRODUCTION

This Environmental, Safety & Health (ES&H) Manual is distributed to the Cimarex field employees in an effort to develop safety and environmental awareness and thereby help prevent personal injury, damage to property and the environment, both on and off the job. It covers many situations you may encounter and provides safety principles for you to follow, but it cannot cover every situation that arises, nor can every safe practice be listed.

The Safety & Health of our employees, our contractors, and our co-workers are of the utmost importance. This manual is intended to assist you in performing your work safely. You should familiarize yourself with its content and follow the guidelines that are contained in the manual.

Safety guidelines alone cannot prevent accidents. You, as part of this work force, must develop a personal safety awareness that all accidents and injuries are preventable. This philosophy starts with you and can only be accomplished by developing and practicing safe work habits.

Federal, state, and local laws, from which much of this material was derived, are by extension, be considered a part of this manual and must be followed. It is the responsibility of each ployee to protect themselves, their fellow workers, the public, and the environment. You are urged to become familiar with all sections of this manual, refer to it frequently, and to comply with all the principles contained herein. The ES&H manual consists of five sections, these are:

I. Cimarex Guidelines
II. OSHA Procedures
III. Safe Work Practices
IV. Environmental
V. Forms

Contractors performing work on our locations are expected to comply with all health, safety and environmental laws and regulations that pertain to the work they are performing.

If you have any questions regarding this manual or the means necessary to operate safely and in an environmentally sound manner, please discuss them with your immediate supervisor or the ES&H Department.

Upon receipt of this manual, each employee shall sign an Employee Statement of Commitment form and will give it to his/her supervisor who will then forward it to the ES&H department.

Cimarex Energy Co.
Revised October 2007

EMPLOYEE
SAFETY AND ENVIRONMENTAL
GUIDELINES

Company personnel should observe the following guidelines for safe and environmentally sound operations. Failure to do so is grounds for disciplinary action up to and including termination of employment.

ENVIRONMENTAL

Any unsafe or environmentally threatening conditions or practices should be promptly reported and immediately corrected as long as the act is not Immediately Dangerous to Life and Health (IDLH). Oil, condensate, chemical, produced water, and natural gas reportable spills/leaks should be reported immediately to your supervisor. The supervisors should then follow the proper reporting procedures for making the necessary contacts and filling out the appropriate reporting forms. A copy of the spill report should be sent to your ES&H Department.

No waste should be improperly or illegally disposed of.

ACCIDENT & INJURY RECORDING PROCEDURES

All injuries, accidents, and damage to Company property should be reported immediately to your supervisor. The supervisors should then follow the proper reporting procedures, making the necessary contacts, and appropriate completion of the accident / incident reporting forms. (Refer to the section on "ACCIDENT/INCIDENT REPORTING PROCEDURES".)

Employees are responsible for exercising care and good judgment in preventing accidents.

PERSONAL PROTECTIVE EQUIPMENT (PPE)

Personnel should wear the appropriate "Personal Protective Equipment" (PPE) while performing their jobs. (Refer to the section on "PERSONAL PROTECTIVE EQUIPMENT".)

Cimarex Energy Co.
Revised October 2007

ANSI approved safety-toed footwear should be worn by personnel at all field, drilling and gas plant locations. (Refer to the section on "PERSONAL PROTECTIVE EQUIPMENT".)

Proper eye and face protection should be worn when sanding, grinding, buffing, welding, chipping, working with chemicals, and anywhere else that conditions require. (Refer to the section on "EYE AND FACE PROTECTION".)

Hearing protection should be used as required in posted areas and in other areas where there is high noise levels. (Refer to the section on "HEARING CONSERVATION PROGRAM".)

FALL PROTECTION

Employees working at a height above six feet should use fall protection equipment. (Refer to the section on "FALL PROTECTION PROGRAM".)

CONFINED SPACE

Personnel should not enter a permit required confined space until a Hazardous Work Permit has been approved by the qualified person on location and/or a Cimarex supervisor. (Refer to the section on "CONFINED SPACE ENTRY PROGRAM".)

HOT WORK

Cutting and welding operations carried out in areas where flammable vapors may be present should not be initiated until a combustible gas detector survey has been performed and a Hazardous Work Permit signed by the qualified person on location and/or a Cimarex Supervisor. (Refer to the section on "HOT WORK PROGRAM".)

GENERAL SAFETY GUIDELINES

Employees will attend scheduled safety meetings and training sessions unless prior arrangements have been made with the employee's supervisor. Your active participation in these meetings, sharing your thoughts and knowledge, could prevent injuries. Alternative arrangements for safety meeting and training re-scheduling shall be made by the supervisor and or the ES&H Department.

Each employee shall abide by all Cimarex safety and environmental guidelines as well as federal, state, and local laws while performing duties.

Develop safe work habits, attitudes and encourage safe behavior and positive attitudes in your fellow employees.

Never bypass or otherwise make inoperable any safety device or any anti-pollution device unless authorized by a supervisor. Report all safety and anti-pollution device malfunctions to your supervisor promptly and flag the device immediately to warn others of the hazard.

Cimarex Energy Co.
Revised October 2007

Smoking or open flame is prohibited within 50 feet of any oil or gas production facility or well site and elsewhere, where "NO SMOKING" signs are posted.

During inclement weather where lightning may occur, employees should avoid working on elevated structures such as tanks, tank walkways, etc.

Safety and warning signs should be posted as required and should be obeyed by all personnel.

Personal misconduct, such as horseplay, fighting or practical jokes is prohibited.

Follow proper procedures and use the proper tools and equipment in your daily work. Only tools in good condition designed for the particular job being done should be used. Any tool or device subject to bearing a load or withstanding pressure should be engineered for the purpose and purchased from a reputable manufacturer.

Protective guards on moving machinery should be in place before start-up and should not be removed while equipment is operating. Equipment should not be operated without guards in place.

High standards of good housekeeping and conduct are aids to safety and should be required of all Cimarex properties. Tools, equipment, Company vehicles and all field locations should be kept clean and orderly.

Personnel should be trained in emergency response and reporting procedures pertaining to their area of operation.

Safety equipment should be located and maintained in each Company vehicle, field office, and other areas as required.

Sleeping while on duty is prohibited, unless housing is provided on location, such as at drilling locations, and the employee is on an "on-call" status.

Possession or use of controlled substances or illegal drugs, and any paraphernalia associated with their use, intoxicating beverages, firearms, fireworks, weapons, or explosives are prohibited on any Company property.

Personnel should report to work in a fit condition to perform the duties required by their job in a safe and healthful manner. Reporting to work in an unfit condition may put you or a co-worker in danger and render you less able to respond effectively in an emergency. Driving Company vehicles under the influence of alcohol is strictly prohibited. Employees should notify their Supervisor of any medication or any physical or mental condition which could affect the safety of their work performance.

USCG approved life jackets or work vests should be worn while working on water, including operating or being transported in small boats.

Employees should use the Think Incident Free (TIF) program as key job planning tools to identify hazards and safeguards associated with tasks they are asked to perform.

Cimarex Energy Co.
Revised October 2007

Employees should participate in the STOP program and all unsafe acts and/or conditions should be reported and documented on the STOP Card.

Any employee having doubts about the safety of a job is authorized to immediately stop the work, step back, and re-evaluate the task. Only when all present are satisfied that the work is being done safely should the work resume.

Employees will be responsible and held accountable for their environmental and safety performance.

SUPERVISOR'S
(AREA SUPERINTENDENTS, SUPERVISORS & FOREMEN)
SAFETY AND ENVIRONMENTAL GUIDELINES

Every supervisor shall strive to see that all work in their area is performed in a safe manner. Supervisors are responsible for seeing that each employee receives the necessary instructions and training they need to complete any assigned task in a safe manner. It is also the responsibility of supervisors to make available to all Company personnel any personal protective equipment, tools, supplies and any other equipment they need to perform their job and to see that all equipment is used in accordance with any safety rules outlined in this manual. Itemized below are specific requirements that a supervisor should follow in order to comply with Cimarex's ES&H Manual. Supervisors should do the following:

Promote Cimarex's ES&H guidelines.

Set a good example for employees to follow.

Be aware of the hazards associated with each operation.

Enforce all safety and environmental guidelines.

Attend or conduct regular safety meetings with all employees.

Report all accidents/incidents to the ES&H Department in a timely manner by telephone, and by using properly completed forms. In coordination with the ES&H Department, investigate all serious accidents/incidents involving Cimarex employees and recommend corrective actions.

Cimarex Energy Co.
Revised October 2007

Complete and distribute any required safety and environmental reports, including proper permits for all hazardous work procedures in a timely manner.

Perform safety and environmental evaluations as frequently as required. Corrective actions should be taken and documented.

When possible, hold pre-job safety briefings when new or hazardous work is being undertaken.

Where inherent hazards exist that cannot be eliminated, familiarize the work group with the situation and develop a safe method for controlling it.

If possible, review all design and operational revisions in your area with the ES&H Department during the design and construction phase of any project to make sure they are in accordance with all approved standards and codes. More formal procedures to deal with management of change are prescribed by Process Safety Management (PSM) Standards for certain processing operations.

Contact the ES&H Department to obtain appropriate safety and environmental training for employees when there is a change in their employees' job functions or a new employee is hired.

Actively participate in the STOP and TIF programs.

Cimarex Energy Co.
Revised October 2003

COMPANY
SAFETY AND ENVIRONMENTAL GUIDELINES AND GOALS

Taking reasonable steps to protect our employees, contractors, the public, and the environment are essential. Cimarex will diligently strive to provide human health and safety protection and environmental stewardship by establishing and maintaining:

Compliance programs that are intended to meet or exceed the regulatory requirements of the applicable governmental requirements.

Industrial hygiene, personal protection, and medical monitoring programs to control harmful and toxic agents and conditions affecting employee health and welfare.

Programs that will strive to provide an accident free workplace by anticipating, evaluating, and managing risks through emphasis on prevention, preparedness, and response to potential hazards.

Training that will encourage the employees to perform their jobs in a safe and environmentally responsible manner.

Necessary resources to support its safety, health, and environmental goals.

Processes to analyze and review safety & environmental programs to try and detect, eliminate or control, in advance the sources of personal injury, property damage, and harmful environmental releases in our operations.

An effective means of communication, education, and training that will enhance our health, safety, and environmental work procedures and practices.

Promote the STOP and TIF programs.

NOTE: Any exceptions to these Safety and Environmental guidelines outlined in this manual should have prior approval from the Vice President of Production, Operations or Drilling, and/or consultation with the Manager of the ES&H Department.

Cimarex Energy Co.
Revised October 2007

STOP PROGRAM

Safety Training Observation Program (STOP)

The STOP Program is a behavioral based safety program that trains "you to observe, correct, prevent, and report unsafe acts systematically." Only 4% of injuries are caused by unsafe conditions, the other 96% of all injuries are caused by unsafe acts. Therefore, most of Cimarex's Safety Training will focus on the actions of employees and contractors in an effort to prevent accidents. The remaining training will cover operating exposures and what to do in case of an accident.

Listed below are some of the basic principles that STOP and Cimarex's Safety Program are based on:

- Safety is everyone's responsibility.
- Most if not all injuries and occupational illnesses can be prevented.
- All construction and operating exposures can be reasonably safeguarded.
- Preventing injuries and incidents is good business.
- All employees, both Cimarex and contractor, have the authority to stop any work where imminent danger exists, and are expected to do so.

All employees are expected to participate in this program and the supervisors are responsible for reviewing corrective actions identified by the STOP card and for implementing as appropriate. If an action will not be implemented, the reason for this decision should be reviewed.

Cimarex Energy Co.
Revised October 2007

THINK INCIDENT FREE

Think Incident Free (TIF)

The TIF process is a tool to aid employee's efforts to work safely. The process consists of a series of questions grouped in four categories, which should be asked by each employee prior to beginning any job.

Planning

Do I understand the task and how to perform it?
Have I identified all hazards associated with the task?
What could go wrong?
How will I eliminate or minimize the hazards associated with this task?
Have I planned all job tasks?
Have I considered all safe practices/guidelines that apply to this task?
Can I work the plan safely?
Do I need help to do this work safely?
Do I need a permit?

Proper Tools and Equipment

Do I have the personal protective equipment (PPE) I need?
Do I have the right tools and equipment?
Have I checked if tools/equipment are in good working condition?

Training

Am I trained to do this work?
Am I trained to use the equipment or tools required?

State of Mind

Will I give my full attention to this task?
Will I stop and redo my plan if something unforeseen happens?
Am I meeting or exceeding safety requirements for this task?

Cimarex Energy Co.
Revised October 2007

ACCIDENT AND INCIDENT INVESTIGATIONS

I. Investigations

A. Accident investigations may be required by the ES&H Department or the supervisor in charge at that location for any accidents involving:

1. Serious employee injuries, except fatal employee injuries.
2. Property damage to Company facilities only.
3. Property damage to third parties or their facilities / equipment.
4. Other valid reasons such as near miss incidents or equipment failures.
5. Near miss incidents as defined by the Process Safety Management (PSM) Standard (OSHA 1910.119(m).)

B. Accident investigations shall be conducted in accordance with Company set guidelines.

C. Documentation of investigations should be handled in accordance with Company policies and as directed by the supervisor or the ES&H Department.

II. Incident / Accident Investigation Procedures

A. The plant or field supervisor and/or the ES&H Department may conduct an investigation within 48 hours of the time of the incident.

1. The investigation will consist of a thorough review of the circumstances leading to the incident/accident.
2. Upon conclusion of the investigation, local operating management should communicate the information in the report to the affected Company or contractor employees.
3. The incident investigation should be documented using the attached form or an equivalent (Appendix A-II).
4. The report shall contain the following:
   a. Date of the incident;

b. Date the investigation began;

c. A description of the incident,

d. A description of the possible contributing factors. Use facts, DO NOT SPECULATE; and

e. Possible recommended solutions to avoid recurrence.

5. The report should include a time-table which outlines the implementation schedule for initiation of recommended corrective action(s).

6. The report will be maintained on file for a minimum of 5 years.

APPENDIX A-II

Supervisor's Accident Investigation

(To be completed by the employee's supervisor or other responsible administrative official)

Location where accident occurred:	Employer's Premises: Yes ☐ No ☐ Job site: Yes ☐ No ☐	Date of accident or illness:
Who was injured?	☐ Employee ☐ Non-Employee	Time of accident a.m. ☐ p.m. ☐

Length of time with firm	Job title or occupation	Name of dept. normally assigned to	How long has employee worked at job where injury or illness occurred?

What property/ equipment were damaged?	Property/ equipment owned by:

What was employee doing when injury/ illness occurred? What machine or tool was being used? What type of operation?

How did injury/ illness occur? List all objects and substances involved?

Part of body affected/ injured?	Any prior physical conditions? If so, what? ☐ Yes ☐ No

Nature and extent of injury/ illness and property damaged (be specific)

PLEASE INDICATE ALL OF THE FOLLOWING WHICH CONTRIBUTED TO THE INJURY OR ILLNESS

____ Improper instruction	____ Failure to lockout	____ Unsafe arrangement or process
____ Lack of training or skill	____ Unsafe position	____ Poor ventilation
____ Operating without authority	____ Improper dress	____ Improper guarding
____ Horseplay	____ Improper protective equipment	____ Improper maintenance
____ Physical or mental impairment	____ Unsafe equipment	____ Inoperative safety device
____ Failure to secure	____ Poor housekeeping	____ Other

Supervisor's corrective action to ensure this type of accident does not recur:

Was employee trained in the appropriate use of Personal Protective Equipment/ Proper safety procedures?	Yes ___ No ___
Was employee cautioned for failure to use Personal Protective Equipment/ Proper safety procedures?	Yes ___ No ___
Did employee promptly report the injury/ illness?	Yes ___ No ___
Is there modified duty available?	Yes ___ No ___

Supervisor's Name	Supervisor's Signature	Phone #	Date

Cimarex Energy Co.
Revised October 2007

ACCIDENT REPORTING PROCEDURES FOR PERSONAL INJURY/ILLNESS, VEHICLE AND CONTRACTOR ACCIDENTS

I. General

A. All vehicle accidents occurring while operating a Company owned or leased motor vehicle or personal vehicles used on Company business and all injuries occurring to all personnel on Company business should be reported immediately to the employees' immediate supervisor. This should be done immediately via a telephone conversation or a facsimile. The supervisor shall report the incident to the ES&H Department.

B. One of the following accident reports should be completed for all accidents / injuries depending on the type.

1. Form –Occupational Injury or Illness Report (Appendix A-III)
2. Form –Vehicle Accident Report (Appendix A-IV Minor or Appendix A-IV Major)
3. Form – Incident Report (Appendix A-V)

C. The completed accident report will be faxed or emailed to the ES&H Department. The ES&H Department or the Assistant Treasurer upon review will forward it to the insurance Carrier.

II. Occupational Injuries and Illnesses - Employees

A. The injured employee shall report any and all injuries to his immediate supervisor as soon as possible after they occur.

B. The employee shall complete all sections required on the First Report of Injury / accident form and sign it.

C. The immediate supervisor must sign the report.

D. The ES&H Department must be notified of any lost time accident by any employee immediately by phone, electronic mail and/or facsimile.

Cimarex Energy Co.
Revised October 2007

III. Vehicle Accidents - Employees

A. Employees involved in a motor vehicle accident, shall report all such accidents to their immediate supervisor as soon as possible after the accident occurs.

NOTE: A motor vehicle accident is defined as an occurrence that results in death, injury or property damage involving the use of Company owned, rented or personal vehicles used on Company business.

B. The employee shall complete all sections of the Vehicle accident form (Appendix II), sign it, and forward it to his or her immediate supervisor.

C. The form must be signed by the employee's immediate supervisor.

D. If injuries occur to occupants (Cimarex employees) of the vehicle in the course of Company business, then Form must be completed as well to report such injuries. Injuries to non-Cimarex employees, in a Company owned vehicle, must be reported on the form and forwarded to the ES&H Department.

E. The immediate supervisor shall route the completed signed forms to the ES&H Department.

F. The Company driver shall obtain personal information along with any insurance information from the other driver, and, if applicable, the name and addresses of any witnesses, police reports and any other related information. This information should be sent to the ES&H Department, the Cimarex Legal Department and the company's insurance carrier depending on how serious the accident is.

IV. Occupational Injuries and Illnesses to Contractors and/or others

A. Injuries or illness to contractors should be documented.

B. The completed contractor's first report of injury or illness form should be requested and filed at field office and a copy sent to the ES&H Department.

V. Regulatory Reporting Requirements Injuries and Fatalities

A. ES&H Department will notify the nearest office of the Area Director of the Occupational Safety and Health Administration (OSHA) must be notified within eight (8) hours after the death of any employee from a work related incident or the in-patient hospitalization of three or more employees as a result of a work-related incident. The ES&H Department will make the telephone call to OSHA. All incidents/accidents must be reported immediately to the ES&H Department.

Cimarex Energy Co.
Revised October 2007

B. The report shall be made by the ES&H Department. They will contact the OSHA office nearest the incident or to the OSHA toll free central telephone number at 1-800-321-OSHA (1-800-321-6742).

C. The report must include the following information: name of establishment, location of incident, time of incident, number of fatalities and/or hospitalized employees, contact person, telephone number, and a brief description of the incident.

D. Injuries to Cimarex employees that require doctors' services must be filed with workers compensation. Please fill out the appropriate forms, sign them and forward them to your supervisor. The supervisor will review the form and then send it to the ES&H Department.

E. The immediate supervisor shall complete the previously identified accident report forms and send to the ES&H Department.

VI. References

1. Occupational Safety and Health Administration, Department of Labor, 29 CFF Part 1904.8.

2. American National Standards Institute, D16.1-1976 and 216.4-1977.

APPENDIX A-III

Cimarex Energy Co

Employer's First Report of Injury

Complete this form and fax or email as soon as possible following a Workers' Compensation accident or illness to the ES&H Department

Employee

Last Name: _____ First Name: _____

Social Security Number: _____ Date of Birth: _____

Employee Home Address: _____

Employee Phone Number: _____ Gender: _____ Marital Status: _____

Injury/Accident Date: _____ Injury/Accident Time: _____

Date Employer Notified: _____ If fatal, date of death: _____

Missed Work Days: _____ State Employee Reports In: _____

Branch Name: _____

Employment Status: Full time ☐ Part time ☐ Date of Hire: _____

Job Description: _____

Department Name: _____ Supervisor's Name: _____

# of Days Worked Per Week: _____ Average Hours Worked Per Week: _____

Injury or Illness

Part of body injured: _____ Type of Injury: _____

Description of injury or illness: (Do not speculate – Facts Only) _____

_____

_____

Accident location (at branch or other location?) _____
(Give address if other)

Medical Provider Name: _____

Medical Provider Address: _____

Medical Provider Phone Number: _____

Did Employee leave work? ☐Yes ☐ No Date Employee returned to work: _____

Witnesses to accident: _____
(Name and Phone Number)

_____

Paid for Date of Injury: _____

Form completed by: _____

osition: _____ Date: _____

Cimarex Energy Co.
Revised October 2007

\PPENDIX A-IV (Minor)

VEHICLE ACCIDENT FORM

*TIP: Keep a disposable camera in glove department for damage documentation!

NAME: _____

ADDRESS: _____

PHONE: WORK: ( ) _____ CELL: ( ) _____

HOME: ( ) _____

VEHICLE REGISTRATION # _____

YEAR MAKE _____ MODEL _____

VEHICLE PLATE #: _____

DRIVER'S LICENSE # _____

INSURANCE CARRIER: _____ INSURANCE PHONE #: _____

POLICY #: _____

INSPECTION UP TO DATE: _____

DATE OF ACCIDENT: _____

TIME OF ACCIDENT: _____

LOCATION (Draw location & direction of each vehicle at time of collision. Indicate street, flow of traffic, stoplights, signs, etc.):

ROAD CONDITIONS *(Clear, rain, Snow, Mist, Fog, etc.)*: _____

CONDITION OF OTHER DRIVER *(Sober, Drunk, Hurt, etc.)*: _____

OTHER DESCRIPTION OF DAMAGE: _____

CALL POLICE TO REPORT ACCIDENT

NAME OF POLICE OFFICER(S): _____

Cimarex Energy Co
Revised October 200

APPENDIX A-IV (Major)

Driver's Name
License No.
Company / Department

ACCIDENT TIME / PLACE

Date ____ Time ____ AM ☐ PM ☐
in
(City or Town) (County) (State)
On
(Street or Highway)
At
(Cross Address or Intersection)
Distance and Direction from
(Nearest community landmark, etc.)
☐ Own Country ☐ Business-Shopping
☐ Residence ☐ Manufacturing-Industrial
☐ Other (Describe)

WITNESSES

Persons seeing the accident will be of service to the driver for giving the names and addresses.

NAME
Address Phone
NAME
Address Phone

POLICE / FIRE / OTHER OFFICIALS

NAME
Badge No. Dept.
Citation No. Other

VEHICLE DAMAGE

COMPANY VEHICLE (VEHICLE #1)

Make & Model
VIN No. Fleet No.
Tag No. & State

OTHER VEHICLE (VEHICLE #2)

Make & Model
Tag No. & State
Driver
Address
Driver's License No.
Name, address and phone of owner (if not the driver)

Insurance Co. Policy No.
Insurance Co. Phone #

OTHER VEHICLE (VEHICLE #3)

Make & Model
Tag No. & State
Driver
Address
Driver's License No.
Name, address and phone of owner (if not the driver)

Insurance Co. Policy No.
Insurance Co. Phone #

INJURED PERSONS

Number of persons injured
Name Age
Address
Injuries
Where taken
Photo number

VEHICLE ACCIDENT

☐ Collision with Other Vehicle ☐ Collision with Fixed Object

	Veh.1	Veh.2	Veh.3
☐ Ran off Road	☐	☐	☐
☐ Overturn in Road	☐	☐	☐
☐ Mechanical Breakdown	☐	☐	☐
☐ Fire	☐	☐	☐
☐ Loading or Unloading	☐	☐	☐
☐ Occupant fell out	☐	☐	☐
☐ Occupant injured inside vehicle	☐	☐	☐
☐ Other			

PEDESTRIAN ACTION

Crossing at intersection ☐ Between intersections ☐
With Signal ☐ Against Signal ☐
No Signal ☐ Roadway ☐
Walking in Roadway ☐ Sidewalk ☐ No Sidewalk ☐
Other (Describe)

VEHICLE MOVEMENT

	Veh.1	Veh.2	Veh.3
Straight Ahead	☐	☐	☐
Turning Right	☐	☐	☐
Turning Left	☐	☐	☐
Starting or Stopping	☐	☐	☐
Stopped in Traffic	☐	☐	☐
Starting in Traffic	☐	☐	☐
Parked	☐	☐	☐
Backing	☐	☐	☐
U-Turn	☐	☐	☐
Sideswipe	☐	☐	☐
Overtaking	☐	☐	☐
Weaving	☐	☐	☐
Wrong Side	☐	☐	☐
Crossing of Road	☐	☐	☐
Extra-ve Action	☐	☐	☐
Other			

VEHICLE CONDITION

MECHANICAL CONDITION

	Veh.1	Veh.2	Veh.3
No Defect	☐	☐	☐
Lights	☐	☐	☐
Brakes	☐	☐	☐
Tires/Wheels	☐	☐	☐
Windshield/Windows	☐	☐	☐
Disabled	☐	☐	☐
Other			

ROAD CONDITION

☐ Not at Intersection ☐ Bridge-Overpass
☐ Street Intersection ☐ Underpass
☐ Drive or Alley ☐ Private property
☐ Crosswalk ☐ Other off-street
Other (describe)
☐ Not Divided ☐ Divided ☐ Limited Access
☐ No. of Lanes 2 3 4 5

ROAD SURFACE

☐ Lanes Marked ☐ Unmarked
☐ Concrete ☐ Gravel
☐ Blacktop ☐ Other surface
☐ Varied Grading (Describe)
Other (specify)
☐ No Defects ☐ Mud
☐ Dry ☐ Loose Material
☐ Wet ☐ Potholes, ruts, etc.
☐ Ice ☐ Fresh Oil
☐ Snow ☐ Uneven Settlement in roadway
Other (describe)
☐ Straight ☐ Level ☐ Hills ☐ Sharp ☐ Hairpin
☐ Curve ☐ R ☐ L ☐ Sharp ☐ Moderate

TRAFFIC CONTROLS

☐ Traffic Lights ☐ R.R. Crossing Signal/Gates
☐ Stop Sign ☐ No Traffic Control
☐ Yield Sign ☐ Posted Speed Limit ____
☐ Police Officer ☐ Other
Were contrails warning? Yes ☐ No ☐

Cimarex Energy Co.
Revised October 2007

APPENDIX V (Major)

WEATHER CONDITIONS

- ☐ Clear
- ☐ Snow
- ☐ Rain
- ☐ Fog
- ☐ Ice
- ☐ Other (specify) _____
- ☐ Daylight
- ☐ Dawn
- ☐ Sunset
- ☐ Dark-road lighted
- ☐ Dark-road unlighted

KINDS OF DAMAGE

Point of Impact

	Veh 1	Veh 2	Veh 3
Front	☐	☐	☐
Rear	☐	☐	☐
Right Front	☐	☐	☐
Left Front	☐	☐	☐
Right Rear	☐	☐	☐
Left Rear	☐	☐	☐
Right Side	☐	☐	☐
Left Side	☐	☐	☐
Roof	☐	☐	☐

Other _____

Cargo/Weight Type _____

Cargo Damage _____

Other Property Damage _____

HOURS OF SERVICE

Time you reported for duty _____

Total preceding hours off duty _____

Hours since last sleep at time of going on duty _____

Hours on duty at time of accident _____

ACCIDENT DIAGRAM

At what distance did you first see danger? _____ Ft.

How fast were you going? _____ MPH

What was your speed at impact? _____ MPH

How far did your vehicle go after impact? _____ Ft.

Describe in your own words the circumstances of the accident.

_____

Describe damage to:

Your vehicle _____

Other vehicles _____

Accident Scene

Instructions for Accident Diagram

Fill in dotted lines to correspond with road at accident site. Show position of all vehicles, pedestrians, etc. as follows:

Your vehicle

Other vehicle(s) 2 (numbered necessary)

Pedestrian

Traffic Signal

Traffic Sign (indicate type)

Signature _____

Date _____

CIMAREX

Fleet Accident Report

To be completed at Accident Scene

WHAT TO DO IN CASE OF AN ACCIDENT

1. STOP AT ONCE and INVESTIGATE.
2. Protect the scene. Use warning devices. Get help from bystanders. Turn off all engines. No smoking. Guard against fire.
3. Assist injured persons. Don't move them unless absolutely necessary. Summon ambulance if needed.
4. Get help. Use nearby phone or send reliable person by. Notify police. Give location and nature of accident accurately. Do not leave the accident scene.
5. Identify yourself and company. Show license and registration on request.
6. BE COURTEOUS. Make no statement about accident except to police or company and insurance company representative.
7. Fill out and check off all applicable information on enclosed form BEFORE YOU LEAVE THE SCENE.
8. File accident report with police.
9. Inform your manager immediately of accident.

Cimarex Energy Co.
Revised October 2007

APPENDIX A-V

INCIDENT REPORT

CASE FILE # _____
(For office use only)

DATE OF RECORD: _____ REPORTED BY: _____
DATE OF INCIDENT: _____ REPORTED TO: _____
DEPARTMENT: _____ DIVISION: _____

INCIDENT TYPE

*SECURITY	*DESTRUCTION	*THEFT
☐ Bomb Threat	☐ Fired Explosion	Est. Value:
☐ Ethics	☐ Spill Pollution	List stolen items on reverse side
☐ Workplace Violence	☐ Weather	Include: Description
☐ Sexual Harassment	☐ Vandalism	Value
☐ Threats	☐ Safety	Model
☐ Contraband	☐ Regulatory	Serial #
☐ Other	☐ Other	Any other identifying marks

LOCATION OF INCIDENT (Office, Plant, Yard, Lease, etc.)

Address of Nearest Town:
Address City State County

DESCRIBE WHAT HAPPENED: (Use reverse side for additional space) Do Not Speculate.

ATTACH DESCRIPTION & DETAILS FOR THEFTS/ OTHER INCIDENTS FORMS IF APPLICABLE

HAVE LAW ENFORCEMENT/ REGULATORY AGENCIES BEEN NOTIFIED? ☐ YES ☐ NO

LIST AGENCIES, NAMES, REPORT NUMBERS (IF KNOWN)

THIS REPORT PREPARED BY:

NAME: DEPARTMENT: DATE & TIME:

Pg. 1

Cimarex Energy Co.
Revised October 2007

PROPERTY/PRODUCT TAKEN, MISSING OR DAMAGED

Quantity	Units	DESCRIPTION OF ITEM (include make, model & serial #) Product Description (crude oil, gasoline, antifreeze, etc.)	New	Used	Est. Value or Replacement Cost

HYDROGEN SULFIDE (H_2S) SAFETY PROGRAM

I. Program Overview

A. Each field or plant location where employee exposures to hydrogen sulfide gas (H_2S) may exceed 10 parts per million (ppm) by volume in air should have a (H_2S) safety program to govern Company field activities that may expose employees to H_2S. This program will satisfy the requirement above if all provisions set forth below are met. Any site specific procedures that may be developed for a location in addition to this program must be as stringent as those outlined herein and established in writing.

B. Each field or plant location that is considered "sour" as described above shall comply with all aspects of governmental regulations (OSHA) and Company policy regarding operations where H_2S may be present. The ES&H Department along with the field supervisors will be responsible for implementation and enforcement of the H_2S safety program.

C. No person shall enter an area where high concentrations of H_2S are known or suspected to be greater than ten (10) parts per million (ppm) by volume in the employees breathing zone without wearing proper respiratory protective equipment or having the equipment available.

D. All contract personnel working for Cimarex should be required to be H_2S certified and will carry an H_2S monitor while working on any company location where H2S is present. Cimarex employees are required to comply with the same H_2S safety requirements.

E. "APPENDIX H-VI" provides background information regarding exposure levels, tank gauging, and various topics concerning H_2S.

F. Personnel with perforated eardrum may not be safe even with proper respiratory protection equipment.

II. Training Program

A. Safety training will be provided to all personnel who may be required to work in a known or suspected H_2S environment. This training must be given prior to entering or working in an H_2S environment. The following areas must be covered in the program:

Cimarex Energy Co.
Revised October 2007

1. Hazards, properties and characteristics of H_2S and sulfur dioxide (S02) gases;
2. Sources of H_2S and SO_2;
3. Use of H_2S detection devices;
4. Description of H_2S and/or $S0_2$ detection systems used at some locations;
5. Symptoms of exposure;
6. Use and limitations of respiratory protection equipment. Hands-on training is essential;
7. First aid procedures and equipment including location of safety equipment;
8. Use of the "buddy system" and emergency rescue procedures;
9. Wind direction awareness and routes of egress (exits);
10. Confined space and enclosed space entry procedures;
11. Contingency plans including gauging procedures; and
12. Company policy and procedures for H_2S locations. This should include a discussion of workplace practices and relevant maintenance procedures established to protect personnel.

B. All personnel who work in or may be required to work in an H_2S area (employees and contractors) shall complete a refresher course in H_2S safety annually.

C. All training shall be documented. In addition, it is recommended that wallet cards be issued to those successfully completing the course.

D. Contractors shall document and provide verification of such training to Cimarex upon request.

III. Hydrogen Sulfide Respiratory Protective Equipment

A. Type/Selection

1. Only positive pressure self-contained breathing apparatus (SCBA) or positive pressure air line units with an escape unit will be used in any known or suspected H_2S environment of 20 ppm or greater in the breathing zone. The use of canister type gas masks for protection against H_2S is prohibited.

2. Only positive pressure SCBA or positive pressure air line respirators with an emergency egress bottle shall be used when an employee is exposed to hydrogen sulfide (H_2S), oxygen deficient atmospheres, or atmospheres designated as immediately dangerous to life and health (IDLH). The ES&H Department should be consulted if there are questions as to when or what type respiratory protective equipment is necessary.

B. Personnel Requirements

1. Company employees must be physically able to utilize a SCBA or airline unit if they are to be assigned to a work location where H_2S is present or suspected. Personnel who may be required to wear respiratory protection equipment on a routine basis will undergo an annual pulmonary function test. A physician or a qualified medical person should determine if an employee is physically able to wear a respirator. A routine basis is defined as having to wear respiratory protection at least monthly.

2. Facial hair shall not come into contact with the sealing portion of the face - piece. (See the "FACIAL HAIR POLICY")

C. Respirator Maintenance, Cleaning, Storage

1. Respirators should be visually inspected prior to and after each use to ensure they are in proper working condition. Visual inspections do not have to be documented. Respirators should be inspected monthly and documented.

2. Supervisors or a designated person at each field location where respirators are available are responsible for ensuring that monthly inspections and any necessary maintenance are performed on the units.

3. Respirators should be cleaned after each use in accordance with the procedures outlined in the "Respiratory Protection Program".

4. Breathing equipment must be stored in its carrying case or other designated container in a convenient location to facilitate easy access in an emergency situation.

5. Respirator air cartridges or tanks should be kept in a full and ready state at all times. They shall be refilled if the air supply falls below 85 percent of the cylinder capacity.

6. Respirator storage areas must be clearly identified.

7. Compressed breathing air cylinders shall be hydrostatically tested in accordance with the manufacturer's recommendation.

IV. Breathing Air Quality

A. All breathing air in SCBA and airline respirators shall meet or exceed ANSI Z66-1-1973 specifications for Grade D breathing air.

B. Suppliers of compressed breathing air must furnish written documentation at each batch filling of air cylinders that the air meets Grade D specifications. A copy of this documentation must be kept on file at each operating location where breathing air is used.

V. Atmospheric Testing and General Sign Requirements

A. H_2S concentrations are to be measured level with the thief hatch on all sour crude, condensate and produced water tanks where there is potential for employee exposure. H_2S concentration measurements for areas other than tank openings can be performed in the breathing zone. A standby person should be available when performing initial H_2S concentration testing of areas known or suspected to have H_2S.

B. All field and plant locations along with all wells and production facilities that present potential H_2S exposure shall be so designated at all of their access points with danger signs that warn personnel of potential H_2S exposure.

C. Locations with limited public road access may use one H_2S sign at each given access point to a group of well locations. All H_2S locations must have the proper signs attached to access points.

VI. Specific Work Procedures

A. No tank, line, valve, flange, etc. which could produce an H_2S concentration of 10 ppm or greater in the employees breathing zone shall be opened to the atmosphere unless proper respiratory protection is worn by the employee performing the job.

B. When possible, equipment that contains H_2S should be depressurized, isolated, purged and cleaned before opening.

C. After opening equipment to atmosphere, the atmosphere inside the equipment shall be sampled to determine the H_2S level. Respiratory protection must be worn when opening the equipment to atmosphere and during testing. If concentrations exceed 10 ppm in the breathing zone, respiratory protection must be worn for the duration of the job or until the H_2S level drops below 10 ppm.

D. Personal monitoring equipment shall be used by employees working without respiratory equipment where there is a probability that H_2S levels may exceed 10

ppm in the breathing zone (i.e. catwalks at sour tanks, water stations and header buildings where dissolved H_2S in the water may create airborne levels in excess of 10 ppm. The field supervisor will determine where such probabilities might exist in a given facility. The H_2S personal monitoring alarm must be set to alarm at 10 ppm so the employee is alerted to vacate the area to get respiratory equipment. If the area is equipped with a fixed detection system then personal monitoring devices are optional. These devices shall be calibrated per the manufacturer's specifications.

E. The buddy system should be used when employees may be exposed to 300 ppm of H2S in their breathing zone during the course of their work other than working at or near an open thief hatch. For fieldwork that requires the opening of a thief hatch, a standby person should be utilized when the concentration of H_2S exceeds 300 ppm measured level with the thief hatch. OSHA equates the breathing zone as being level with the thief hatch for tank gauging operations. The standby person and the employee must be equipped with a SCBA and must wear the SCBA if the potential exists for his exposure to exceed 10 ppm H_2S.

F. Relief valves venting dangerous concentrations of (>300 ppm) H_2S vapors must be vented to flare or where personnel will not be exposed.

G. Sour gas wells shall not be left unattended during blow-down.

VII. H_2S Emergencies

A. Once the H_2S alarm goes off Cimarex employees should evacuate the area, account for personnel, secure the area, and isolate the leak, etc.

B. Field or plant employees should not respond to an H_2S alarm / leak alone. The buddy system must always be used in response to alarm situations.

C. All personnel will be trained in their responsibilities regarding H_2S alarms and emergencies. Training shall be documented.

D. Contractors and visitors should be aware of their responsibilities during an H_2S alarm before they begin work on any potential H_2S location. Unless otherwise defined, their responsibilities shall be to evacuate the area and report to a safe briefing area immediately.

E. Safe briefing areas shall be established for all manned H_2S locations.

F. The supervisor or the designated person in charge of the site has the authority to decide whether an H_2S leak is to be ignited. **Note:** Some state law enforcement agencies have jurisdiction on deciding whether or not to ignite an H_2S leak.

VIII. H_2S Detection Equipment

A. Fixed H_2S detection systems shall be considered for areas that may experience H_2 leaks, where employees are present on a daily basis or where the locations are near residences or other public buildings. The system shall activate a distinctive alarm.

B. Sensors shall be set to annunciate at 10 ppm for a low alarm and at a maximum of 300 ppm for a high alarm on fixed systems.

C. The system should be calibrated at least every 90 days.

D. All H_2S alarms that are activated shall be treated as an actual gas release.

E H_2S alarms shall be distinctive from all other alarms and shall be consistent throughout the facility.

F. Hand held detection instruments should be utilized for spot-checking areas. All electronic hand held instruments shall be calibrated per the manufacturer's specifications.

IX. First Aid Treatment of Hydrogen Sulfide Victims

A. Activate your Emergency Response Plan and telephone for help.

B. Always put on a SCBA before entering a potential H_2S area, then remove the victim to a safe area and begin artificial resuscitation.

C. If breathing has stopped, request mechanical resuscitator (use mouth to mouth resuscitation until it arrives). Employees must be trained in resuscitation techniques when working around any H_2S location. This training should be taught during the CPR training.

D. Initiate CPR if no pulse is detected.

E. Treat for possible shock (keep the victim warm).

F. Ensure that all Cimarex employees that are overcome by H_2S are examined by a physician before returning to work.

X. Safe Operating Procedures for Tank Gauging Operations Containing Hydrogen Sulfide Gas (H_2S)

A. Equipment Requirements and Testing:

1. Personal H_2S monitors should be worn by all employees during tank gauging

operations in areas known or suspected to contain H_2S.

2. Personal H_2S monitors shall be set on 10 ppm.

3. Respiratory protective equipment shall be worn by all employees during tank gauging operations when hydrogen sulfide concentrations in the breathing zone are equal to or greater than 20 ppm. Local exhaust ventilation may be used in lieu of respiratory protective equipment if it is capable of reducing the H_2S concentrations in the employees breathing zone to less than 20 ppm.

4. Positive pressure supplied airline respirator equipped with a five-minute escape pack, or a positive pressure SCBA shall be used by personnel gauging tanks.

5. When concentrations measured level with the thief hatch exceed 300 ppm of H_2S, or when performing other functions that equal or exceed 300 ppm in the breathing zone, the use of a standby person should be utilized. The standby person must have a positive pressure SCBA immediately available on the work site so he/she may perform a rescue if needed.

6. Tests may be done using hand held pumps and detector tubes or an approved electronic tester. Preferably, sampling of H_2S at the thief hatches should be done during the warmer months to determine the highest concentrations that a worker might be exposed to.

7. Testing shall be done in accordance with H_2S testing Requirements for Production Tanks in "Known or Suspected H_2S Locations" section XI below.

B. Warning Sign Requirements

1. When concentrations of hydrogen sulfide gas, level with the thief hatch exceed 10 ppm a sign, as the one below shall be posted at the base of the stairs. The sign shall be at all locations where the tank vents through the hatch.

Danger (red, black and white)

Hydrogen Sulfide

Positive Pressure

Respiratory Protection Required

2. At those locations where concentrations exceed 300 ppm of hydrogen sulfide measured level with the thief hatch, warning signs indicating the need for a standby person shall be posted.

3. A sign shall be installed at the base of the stairs and shall consist of the following wording.

Danger (red, black and white)

Hydrogen Sulfide

Positive Pressure Respiratory Protection and

Standby Person Required

4. When concentrations are less than 20 ppm, level with the thief hatch open, no sign or respiratory protection is required for tank gauging operation.

5. Those central tank batteries (CTB) that have various hydrogen sulfide concentration levels in the tank must be properly identified on the individual tank or with the appropriate warning signs installed at the base of the stairs. If a standby man is necessary, it should be appropriately identified.

C. Additional Facility Guidelines – Sour Tank Batteries

1. At all tank battery locations where concentrations of hydrogen sulfide gas, level with the thief hatch can exceed 20 ppm (100 ppm level with the thief hatch open), a windsock or similar wind direction indicator shall be installed.

2. The wind indicators should be installed as to give an accurate indication of the wind direction at the height gauging operations would be performed.

XI. H_2S Testing Requirements for Production Tanks in Known or Suspected H_2S Locations

A. Production tanks are defined as all tanks that are used in storing, shipping, or holding produced fluids. Produced fluids are oil, condensate, and water, or any combination thereof. These tanks include but are not limited to production, shipping, slop, recycle or pop tanks. Production tanks do not include process vessels, towers, columns, or bullets.

B. All production tanks in areas known or suspected to have H_2S contaminated production must be tested initially to determine the H_2S levels. A standby person is required when performing initial H_2S concentration testing of areas known or suspected to have H_2S. Documentation of previous tests will satisfy the initial testing requirement.

C. All samples can be taken level with the thief hatch or in the vapor space. The thief hatch samples must be taken level with the hatch.

D. After the initial tests in areas known or suspected to have H_2S, retesting is required depending on the level of H_2S, changes in the process which might cause

concentration levels to change. Check with the ES&H Department for testing intervals.

II. References

1. Occupational Health and Safety Administration, Department of Labor; 29 CFR 1910.134,1910.1000
2. American National Standards Institute, 286-1-1973 and 237.2-1972

APPENDIX H-VI

Background – H_2S Tank Gauging Procedures

Manual tank measurements from the top of crude oil and produced water tanks are sometimes necessary for a variety of reasons. These reasons vary from the need to know the fluid change in a tank not equipped with a LACT (Lease Automatic Custody Transfer) unit to the actual sale and transfer measurements of product from tanks not accessible by pipeline.

The most common measurement made from the tank top is fluid volume. This is made through the thief hatch using a gauge tape and plumb bob. Other activities that require an employee to open and stand nears tank's thief hatch include measurement of oil temperature, gravity, and sample collection (thieving) for BS&W concentration. None of those measurements require more than approximately five minutes time to complete at the thief hatch.

Opening the thief hatch allows the release of gases and vapors that have accumulated in the vapor space of the storage tank. The rate of release of those gases change with such variables as the rate of fluid influx into the tank, fluid level in the tank, fluid temperature, gas break-out rates, how long the fluid has weathered, etc.

Vapors and gases from petroleum tanks and produced water tanks do not normally present known or recognized health hazards requiring any special precautions unless they contain a toxic chemical such as hydrogen sulfide (H_2S). The majority of vapors and gases are composed of simple asphyxiants such as methane, ethane, propane and butane. Simple asphyxiants must dilute the oxygen content of air before they become a serious health hazard. Dilution with outside air is rapid once the gas has escaped the thief hatch. The presence of hydrogen sulfide in the vapor space of a tank, however, presents a different problem. Hydrogen sulfide is a toxic gas that has little or no warning properties at lethal concentrations.

The following is a summary of H_2S exposure limits and appropriate precautions required by Field Locations:

> 20 ppm is the ACGIH eight-hour, time-weighted average (TWA) exposure limit. Exposures equal to or above this limit require the use of a positive pressure SCBA or supplied air with a five-minute escape pack. Exposures below 10 ppm require no respiratory protection. 20 ppm is the federal OSHA acceptable ceiling concentration.
>
> 300 ppm - Requires the use of positive pressure type breathing apparatus and the presence of a standby man trained and equipped for rescue when breathing zone exposures are equal to or above this concentrations wind sacks are required when thief hatch concentrations exceed 100 ppm or breathing zone concentrations exceed 10 ppm.
>
> Based on the toxicity of H_2S as described in API Recommended Practices RP 55 and the ANSI Standard, the current practice is that employees wear a full-face supplied air pressure demand type breathing apparatus when breathing zone exposures equal or exceed 10 ppm.

Cimarex Energy Co.
Revised October 2007

A total catastrophic failure of the respiratory equipment during tank gauging operations should not impair employee's ability to lower the thief hatch and move to a safe area when airborne concentrations of H_2S are below 300 ppm.

Usually, lowering the thief hatch will be the only action necessary to lower the exposure concentration to a safe level.

H_2S Health Effects and Exposure Standards

The American Conference of Governmental Industrial Hygienists (ACGIH) has adopted an eight-hour time-weighted average (TWA) exposure limit of 10 parts per million (ppm). The federal OSHA acceptable ceiling concentration is 20 ppm.

The National Institute for Occupational Safety and Health (NIOSH) lists 300 ppm (unprotected exposure) as its 30 minute Immediately Dangerous to Life or Health (IDLH) atmosphere. Concentrations of 1,000 ppm hydrogen sulfide gas may cause cessation of respiration and death if not properly resuscitated.

The API Recommended Practices for Conducting Oil and Gas Operations Involving Hydrogen Sulfide (API RP 55 October, 1981) indicates H_2S concentrations of 100 ppm will cause "coughing, eye irritation, loss of sense of smell after 3 to 15 minutes." H2S Concentrations at 200 ppm "kills sense of smell rapidly, burns eyes and throat". H_2S concentrations of 500 ppm cause "dizziness, loss of sense or reasons and balance, breathing problems in a few minutes." API RP 55 goes on to state that H_2S concentrations at 700 ppm can cause unconsciousness quickly" Similarly, the American National Standards Institute (ANSI) Standard No.237.2-1972 regarding hydrogen sulfide indicates the H_2S exposures in the 500 to 700 ppm range cause "loss of consciousness and possibly death in 30 minutes to one hour."

Emergency Contingency Plan

Rands Butte Gas Development Project

Sublette County, Wyoming

DRAFT

Prepared by

SWCA Environmental Consultants

Sheridan, Wyoming

for

Cimarex Energy

1700 Lincoln Street, Suite 1800

Denver, CO 80203

May 1, 2009

Introduction

Cimarex Energy (Cimarex) is committed to protecting the health and safety of all who work, live, and recreate within the region. Cimarex has developed this Emergency Contingency Plan (Plan) to manage risk and mitigate emergency situations that may arise during the development and operation of the proposed Rands Butte project. The purpose of this Plan is to act as a guide for Cimarex personnel, contractors, and emergency response officials who may be in or near the project area in the event of an emergency situation occurring. For the Plan to be effective, all employees, contractors, and emergency response personnel must be familiar with and trained regarding all aspects of the Plan. The Plan will also be used in concurrence with the existing Cimarex Environmental, Safety, and Health Manual (ES&H) (Cimarex 2007).

It is the policy of Cimarex to provide a safe work environment to all employees, contractors, and local residents who work, live or recreate in or near the project area. The Plan describes how Cimarex will manage risk and emergency response associated with the project. Details of emergency response policies and procedures used for the assessment and response of the Cimarex operations will provide for a safe environment for the Rands Butte project. The Plan will ensure that Cimarex will:

- Make certain that all Cimarex employees and contactors understand working safely is necessary part of their employment and inherent risks of their jobs are managed continuously to achieve a desired level of safety.
- Provide all employees, contractors, and visitors to the project area the capabilities, knowledge, and resources necessary to respond correctly and efficiently to any emergency situation that may arise.
- Manage all aspects of the project during construction and production in a way that protects employees, contractors, the general public, and the environment with the utmost regard and accountability.
- Work with government agencies and the general public to provide an operation which performs in the highest standard and protects the environment in which it exists and will respond in a prudent manner to any emergency situation that could occur within the project area.

The Plan within this document will detail emergency responses to a hydrogen sulfide (H_2S), methane, or any hazardous substance release that may occur within the project area during the construction and operation of the project. All Cimarex personnel, including company contractors, will be trained in all aspects of the project operation, operator safety, and emergency response protocol before allowing admittance to the project area. The training will be given in conjunction with the ES&H training for all new employees, visitors, and contractors. All trained Cimarex personnel and contractors will complete an annual refresher course which will cover the Cimarex ES&H and the Plan.

DRAFT

Plan Distribution and Emergency Contact Information

This document will be supplied to emergency agencies and to personnel within all federal, state, and local emergency agencies responsible for response to emergency conditions. These conditions may arise from any accidental release of any hazardous substances from within the project area. All pertinent emergency response agencies are included within Table 1 below as well as emergency notification outlets.

The distribution of the Plan will provide all agencies and emergency organizations with the primary information necessary to respond to any type of emergency that could occur within the project area. **An electronic copy of this manual will also be posted on the Cimarex Energy website at www.cimarex.com.** Included within this Plan is a community notification and evacuation checklist to be used by emergency personnel for the determination of necessary evacuation procedures in the event of an urgent situation which would require evacuation (See Table 2).

Table 1. Emergency Management Contacts for Federal, State, and Local Agencies

Agency	Address	Phone Contact	Contact
Sublette County Emergency Management Agency	P.O. Box 701 Pinedale, WY 82941	307-367-4378 or 307-276-5448	Emergency Response Coordinator
Sublette County Sheriff's Department	P.O. Box 701 Pinedale, WY 82941	307-367-4378 or 307-276-5448	Sublette County Sheriff
Sublette County Tip Top Search and Rescue	P.O. Box 913 Big Piney, WY 83113	307-367-4378 or 307-276-5448	Search and Rescue Coordinator
United States Forest Service	P.O. Box 218 Big Piney, WY 83113	307-276-5800	District Ranger
BLM Pinedale Resource Area	P.O. Box 768 Pinedale, WY 82941	307-367-5300	Field Manager
Wyoming Highway Patrol	P.O. Box 1260 Rock Springs, WY 82901	(800) 442-9090 or 911	Emergency Response Coordinator
City of Big Piney	P.O. Box 70, Big Piney, WY 83113	307-276-3554	Town Clerk
City of Marbleton	10700 US 189 Marbleton, WY 83113	307-276-3815	Town Clerk
Marbleton/Big Piney Medical Clinic	17 W 3rd, Marbleton, WY 83113	307-276-3306	Emergency Room
Medical Helicopter	Air Med Salt Lake City, UT	(800) 453-0120	
Pinedale Fire Department	130 S Fremont PO Box 653, Pinedale, WY 82941	(307) 367-4550	Emergency Manager

DRAFT

KPIN Radio	219 E Pine St, Ste 112, PO Box 2000, Pinedale, WY 82941	307-367-2000	

Emergency Organization of Cimarex Energy

Cimarex has an existing internal organization of trained personnel to handle emergency situations at the companies Project Area. The Cimarex emergency response team is comprised of trained employees who have the knowledge and skills for handling emergency situations under varying conditions. The following emergency organizational chart (Figure 1) provides information about Cimarex's emergency organization chain-of-command which would be present during any emergency operational situations. Included within the chart are the construction, drilling, and the plant operations organizational chains with appropriate contact information.

DRAFT

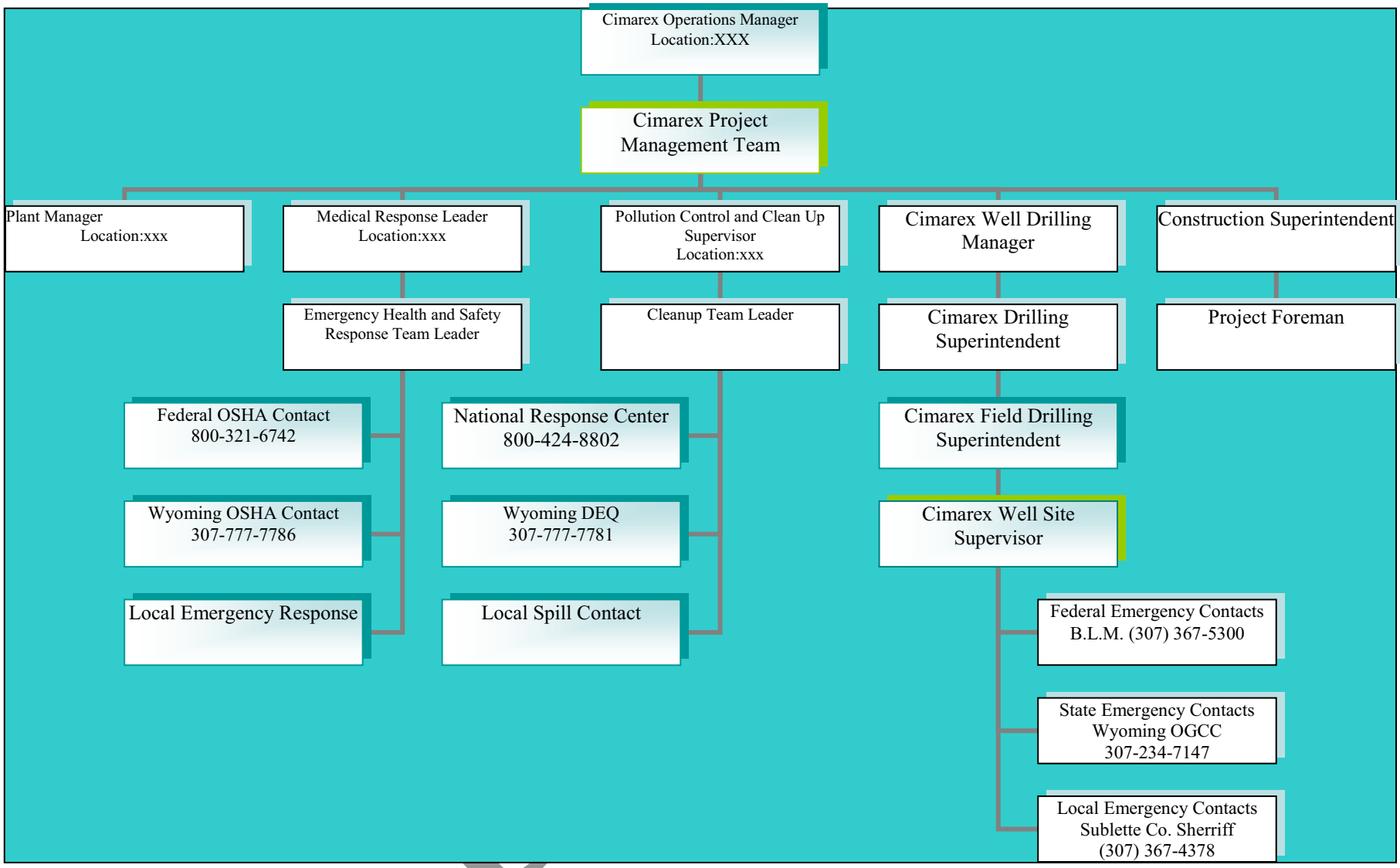

Figure 1. Cimarex Energy Emergency Response Organization Chart

Leak Detection and Alarm System

Cimarex has established systems for the detection of gas escape, determination of the exact location and magnitude of any leak, and verification of real problems vs false alarms. Leak detection systems include the following:

- All production and processing facilities will have electronic sensors installed to continuously monitor production levels and pressure.
- Sensors will be continuously monitored at control centers located in the Methane and Helium Recovery Facility (M&HRF) and Cimarex project office located within the town of Big Piney.
- Air sensors with alarms (both visual and audible) will be located throughout the project area to detect and alert personnel of possible H_2S leaks within the production and processing areas.
- Determination of leak magnitude will be made by air sensors and will be automatic.
- Audible and electrononic alarms will be automatic and continuous until disengaged by the Emergency Response Facilities.
- Determination of climatic conditions affecting gas movement will be automatic based on real-time data communication from Ambient Air Quality and Air Monitoring Station.
- Data communication between air sensors and air monitoring station and the Emergency Response Centers will be instantaneous and continuous via buried fiber optic lines.
- Determination of the exact location of detected leaks will be electronic and linked to the location of the sensor.

Emergency Response Facilities

In the event that a leak is detected and verified, Cimarex has two local operational emergency response locations, each location having process shutdown and emergency response capabilities. The first emergency response site is located within the project area and would be situated in the Methane and Helium Recovery Facility (M&HRF) at Township 29 North, Range 114 West, Section 17. A second remote monitoring and emergency shutdown location would be located at the Cimarex project office located within the town of Big Piney approximately 17 miles east of the production and injection well sites and the M&HRF.

Both operation locations would continuously monitor all aspects of recovery, production, injection, and transport of raw and processed gases and by-products. All operations and current conditions will be monitored real-time and a response to any emergency situation may occur directly from an operation center upon receiving information from any sensors. All wells, including the injection well, the M&HRF, as well as an installed meteorological station located within the project area would be connected to the operation center by a buried fiber optic cable. The communication cable would provide

DRAFT

constant data transmissions to the control rooms. In the event of any power failure, a diesel generator, located at the M&HRF location, would supply backup power to the project area and still provide remote shutoff capabilities in the event of any emergency situation.

All Cimarex employees have the authority to shutdown any operation if they believe there are possible risks to the health or safety of personnel or the environment. Any emergency incident report or response will be directed to the Cimarex project office at the company emergency notification number. This is the same number that is posted on all Cimarex project signs positioned throughout the project area. Other contacts may include the Sublette County Sheriff's office or the Pinedale Fire Department.

ALL NUMBERS TO BE DETRMINED IN FINAL PLAN

Cimarex 24-Hour Emergency Number	(800) XXX-XXXX
Cimarex Project Office – Pinedale	(XXX) XXX-XXXX
Methane & Helium Recovery Facility	(XXX) XXX-XXXX
Cimarex Operations Manager	(XXX) XXX-XXXX (office)
	(XXX) XXX-XXXX (cell)
Cimarex Plant Manager	(XXX) XXX-XXXX (office)
	(XXX) XXX-XXXX (cell)
Drilling Superintendent	(XXX) XXX-XXXX (office)
	(XXX) XXX-XXXX (cell)

DRAFT

Cimarex Notification of Emergency Agencies

In any case of an emergency situation, Cimarex will enact the company emergency contingency response. The Cimarex Operations Manager or his designated alternate will contact the Sublette County Sheriff's Office. The Operation Manager will inform the Sheriff office the nature and extent of emergency as well as the existing site conditions. The Cimarex Operations Manager will also advise the Sheriff's office personnel as to the extent of the emergency response required and possible evacuation and project area closures necessary to protect the general public.

Community Notification and Evacuation

Any emergency situation to occur within the project area should be reported directly to Cimarex at the operations centers which are manned 24 hours per day, 7 days a week. Both the M&HRF plant and the project office located within Big Piney have emergency response and operations shutdown capabilities. The emergency contact phone numbers for each facility is listed below:

- Methane and Helium Recovery Facility Plant – (XXX)XXX-XXXX
- Cimarex Project Office, Big Piney, Wyoming – (XXX)XXX-XXXX

The Operations Manager or designate has the authority upon the report of emergency conditions to activate the emergency contingency response. The Operations Manager will notify the designated emergency response agencies to report the emergency situation and define the affected areas where public warning and evacuation may be necessary. The Operations Manager or designate will be the direct point-of-contact for Cimarex with the emergency response agency manager during existing emergency conditions.

In consultation with the emergency response agency, if an area is determined to require emergency evacuation, the area prescribed for evacuation will be defined by the Operations Manager based upon known conditions within the Project Area upon consultation with the Sublette County Sheriff's office. Evacuation information will be relayed directly to the Sublette County emergency response manager or official. The emergency response agency will use available personnel from listed agencies within Table 1 necessary to complete the evacuation order within the most prudent time frame possible. Agencies included within Table 1 include Federal, State, and Local emergency managers and personnel.

Emergency Response Evacuation

Hydrogen Sulfide (H_2S) Release

Any release of H_2S with a concentration present within the ambient atmospheric media greater than the specified 10 part per million (ppm) health threshold pose a threat to Cimarex personnel, contractors, and the general public who may be present within the

DRAFT

project area. At H_2S atmospheric concentrations which may greater than 100 ppm, a rapid response and evacuation of possible receptors is necessary to protect human life. Procedures for an emergency area evacuation are designed to reduce the risk of exposure to all people who may be within the specified 100 and 500 ppm radius-of-exposure (ROE). The ROE for the 100 and 500 ppm concentration levels within the atmosphere may be calculated by the method outlined within the BLM Onshore Oil and Gas Order No. 6 (1990) or other applicable methods. This publication is considered the agencies standard of performance for operators, employees, and contractors completing work within areas known to produce hydrogen sulfide (H_2S) or sulfur dioxide (SO_2) during potential flaring operations. These ROE levels of concentrations produce areas where possible injury or death of receptors may occur if protective measures or evacuations are not employed when the emergency conditions occur.

The ROE calculated for 100 and 500 ppm H_2S concentration levels is Figure 2. The concentration values are applicable to the specified equations when H_2S concentrations are less than 10% of the total gas stream volume. The equations for the specified concentrations are for a:

- 100 ppm ROE, where loss of smell occurs within minutes and death occurs within 48 hours,

$$ROE = [(1.589)(H_2S \text{ concentration})(Q)]^{0.6258}$$

or,

- 500 ppm ROE, where dizziness occurs and breathing may cease in minutes,

$$ROE = [(0.4546)(H_2S \text{ concentration})(Q)]^{0.6258}$$

Where:
H_2S concentration = decimal equivalent of mole or volume fractions of H_2S in gaseous mixture.
Q = maximum volume of gas available for escape in cubic feet per day at 14.73 psia and 60°F.

The ROE will define the specific areal extent where evacuation and limited or restricted access may be required. Climatic conditions will require that evacuation occur in downwind corridors of ROE first. Ongoing assessment of climatic conditions within the project area will assure that evacuations activity occurs in areas that are impacted if climatic conditions change within the project area. Based upon Cimarex (2008) calculation for specified gas escape rates and H_2S concentrations, the ROE parameters calculated are included within Table 2.

DRAFT

Table 2. Calculated Parameters for Radius of Exposures of Designated H_2S Releases[1]

H_2S Concentration	Gas Escape Rate (scfd[2])	ROE Concentration (ppm)	
		100	500
		Distance, feet (miles)	Distance, feet (miles)
0.04617	4×10^7	11,153 (2.1)	5,096 (1.0)
0.04617	6×10^7	17,210 (3.3)	7,864 (1.5)
0.04617	8×10^7	22,181 (4.2)	10,136 (1.9)

1 At 14.73 psia and 60ºF

2 Standard Cubic Feet per Day

Entry into the evacuation area will be restricted to personnel and emergency response officials who have training and safety equipment sufficient to protect them from existing environmental conditions. The access into the Project Area will be limited with the implementation of security road blocks located at the project ingress/egress sites. Because of the remoteness of the Rands Butte project site, the access to the M&HRF as well as the H_2S production wells and H_2S and CO_2 pipeline and injection well area may be limited by closing project gates. If the calculated ROE defines the evacuation area to extend beyond the limits of the Project Area gates, additional road blocks will be required to restrict access into impacted areas. See Figure 2 for H_2S radius of exposure (ROE) limits for the 100 and 500 ppm concentration of a potential release from within the Methane & Helium Recovery Facility (M&HRF) area.

All persons leaving the project area from an existing road block will be logged into an emergency response log book (Table 3). Any road block security personnel will require constant radio contact with the emergency management agency to record all persons (project personnel, contractors, and general public) leaving the restricted area. The security officer at each roadblock site should also have available to them a portable air monitoring and a breathing apparatus for personal safety. The security personnel will be under direct supervision of the emergency response agency and will restrict access based upon communication from the emergency manager.

Leak Monitoring and Response

Cimarex will design the M&HRF plant and all associated facilities with the highest standards available within the industry. All facilities will have production and processing monitors to survey production levels and detect any possible leaks or losses within the gas stream. Air sensors with alarms (both visual and audible) will be located throughout the project area to detect and alert personnel of possible H_2S leaks within the production and processing areas. These sensors will be stationed to take into account the prevailing climatic conditions as well as the layout of the production facilities. This will provide monitoring coverage and detection capabilities throughout the production area.

DRAFT

The plant operation will be under continuous monitoring at both the M&HRF and the project office. Any operation or production deviation determined to be an emergency condition may require immediate remote shutdown of the operation of the plant. This shutdown may be completed from either Cimarex operation location.

Well drilling rigs that drill within a known area of H_2S must take special precautions to protect the personnel who operate the equipment or are near the drill site. Personnel who are working within close proximity of the drill rig must have a portable sensor available to them to check for possible H_2S levels. If the ambient H_2S concentration is above the 10 ppm threshold, all personnel near the drill rigs must have personnel air support systems available nearby at all times. Other personnel protection devices for well drilling crews should include:

- A reliable 24-hour communication connection to project office for rapid contact with Operations Manager
- Each drill rig will be equipped with a continuous electronic H_2S detection system that will activate an audible and visual alarm system. The sensors will be located in areas where H_2S will be detected at the surface.
- A flagging system, which is in compliance with the BLM Onshore Order #6 will be implemented at all drill rigs in operation and will be used to notify nearby personnel according to flag color displayed.

  Green Flag – Potential Danger

  Yellow Flag – Moderate Danger

  Red Flag – Extreme Danger – Do not Approach

- An evacuation plan, route, and safe area will always be prepared and available to all personnel working on the drill rig. Respiratory protective equipment which meets NIOSH/MSHA standards will be available to all personnel at the designated safe area.

- The area near the drill rig will be marked with warning signage which declares the H_2S dangers and that the area is designated as a "No Smoking Area".

- All personnel who enter the project area will be trained in emergency conditions, safety, and response to protect themselves as well as others who may need assistance.

All drill rig operation and safety procedures will be under the authority of the Cimarex Well Field supervisor. The supervisor will report directly to the Cimarex Well Drilling Manager. The well field supervisor will be responsible for notifying and maintaining contact with the well drilling manager during all drilling setup and operations.

DRAFT

Methane Release

Because of the explosive potential of the methane product being transported within the product pipeline, constant monitoring of the pipeline and all associated equipment will occur throughout the length of the pipeline. The pipeline will be instrumented and monitored continuously for potential leaks. If a leak is determined or reported during operation, the transmission line will be shutdown and the source of the leak shall be determined.

Methane gas, though not an asphyxiant in open areas, may cause loss of consciousness in confined areas. Because methane is generally heavier than air, the leaking product may stay close to ground level at it moves down wind, away from the source. All confined areas require the use of portable measuring devices to detect the presence of natural gas. An emergency response to a potential methane release from the transmission pipeline to nearby areas requires significant knowledge in emergency response procedures but the area of concern is limited to a much smaller zone where injury or death may occur from thermal explosion developing in response to methane ignition and combustion. Figure 3 and 4 shows a thermal buffer zone that is associated with the buried methane pipeline where atmospheric concentration of methane could persist after a release and pose a thermal explosion potential. Thermal and concussion damage to structures or biological receptors from an explosion may occur at significant distance from the point of ignition of the methane source. Because of this threat, if any personnel or general public are within a close proximity to the pipeline and within the1-mile buffer will be notified by the emergency management agency to evacuate the area. The evacuation area will be secured until the gas leak source has been located and repaired.

Hazardous Substance Release

All chemicals stored within the project area during construction and operations must be handled according to label directions for each chemical. All chemicals present within the project area must also have a Material Safety Data Sheet (MSDS) located in a specified central location where access to during an emergency situation would be possible. These MSDS must be kept up to date and any new chemical added to the project area must have an MSDS added to the existing catalogue. All lists of hazardous substances stored within the project area must be updated at a minimum of once per month unless chemicals are added more often. If that is occurring then the chemical list must be updated more frequently.

All hazardous chemicals, as defined by the EPA Hazardous Substances Reportable Quantities and the Emergency Planning and Community Right to Know Act (EPCRA) list within 40 CFR Part 302-312 (USEPA 2001), stored at quantities greater than the reportable quantities must be reported as required by the EPCRA regulations. Any release of a hazardous substance above a specified reportable quantity for the hazardous substance must be reported to the EPA. Any spill must be cleaned up immediately based upon information that is available in the MSDS. If any spill is of a sufficient quantity to require notification and possible emergency response, the emergency response agency within Sublette County must be notified immediately upon discovery of the release. All

DRAFT

hazardous substances that are recovered during the cleanup must be handled and disposed of in accordance with available information. Any emergency response necessary will be based upon information available regarding the specific hazardous substance and after consultation of Cimarex Operations Manager and the Sublette County Emergency Response official.

DRAFT

References

Bureau of Land Management, November 23, 1990. Onshore Oil and Gas Order No. 6, Hydrogen Sulfide Operations, 43 CFR 3160. Federal Register, Volume 55, Number 226.

Cimarex Energy, October 2007. Environmental, Safety and Health Manual, Attachment #6, Application for Permit to Drill (APD RR 20-14).

Cimarex Energy, April 2008. H_2S Drilling Operation Plan, Riley Ridge Project, As Attached to Application for Permit to Drill (APD RR 20-14).

U.S. Environmental Protection Agency, October 2001. List of Lists, Consolidated List of Chemicals Subject to the Emergency Planning and Community Right to Know Act (EPCRA) and Section 112(r) of the Clean Air Act, EPA 550-B-01-003. Office of Solid Waste and Emergency Response, Washington DC.

DRAFT

Figure 2. ROE for 100 and 500 PPM for M&HRF Area

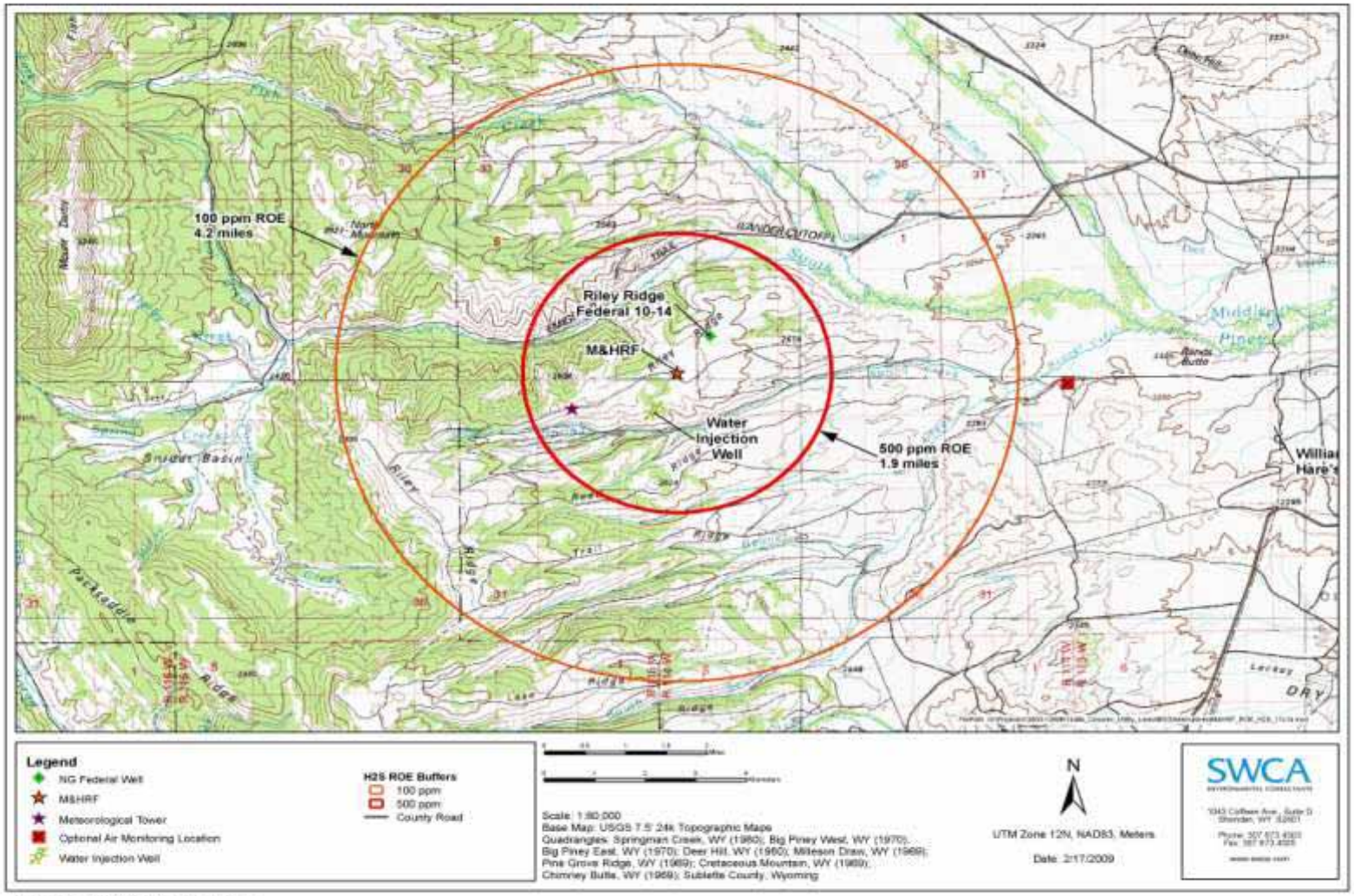

Map 4-9. H2S Radius of Exposure.

Table 3. Notification Table for Residents and Business within Cimarex M&HRF Area

Name	Address	Contact Information	Type	Location	Status *			Comments
Pamela Hamilton	414 S Piney Fish Creek Road, Big Piney, WY	(307) 276-5424	Residence/Part-Time	4.2 Miles northeast of M&HRF	☐ N	☐E	☐C	Located on northeast edge of 100 ppm H_2S ROE
Exxon Plant	1482 County Road 23 134 LaBarge, WY	(307) 386-2266 (307) 386-9283	Business		☐ N	☐E	☐C	
Exxon Plant	911 Hogsback Ridge, LaBarge, WY	(307) 386-2262 (307) 386-2263	Business		☐ N	☐E	☐C	
Exxon Plant	US Highway 189, LaBarge, WY	(307) 386-9285	Business		☐ N	☐E	☐C	
					☐N	☐E	☐C	
					☐N	☐E	☐C	
					☐N	☐E	☐C	
					☐N	☐E	☐C	
					☐N	☐E	☐C	
					☐N	☐E	☐C	

*** N = Notified E = Evacuated C = Cleared to Return**

DRAFT

Figure 3. Methane Pipeline with 1/2 and 1-Mile Exposure Buffers and Nearby Structures

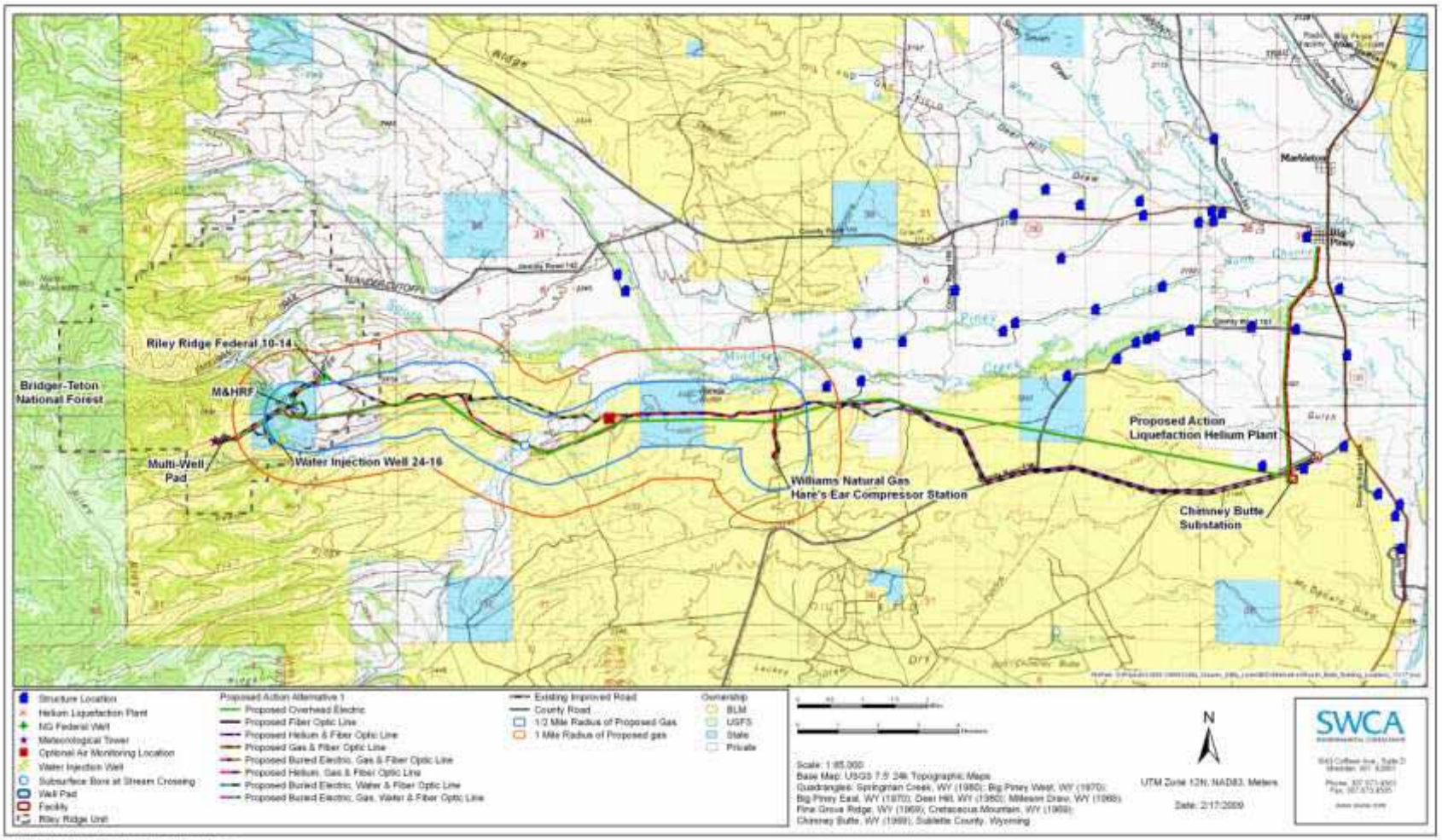

Rands Butte Area Structure Locations

Appendix F
ALOHA Hazardous Gas Dispersion Model

Dispersion Modeling of Hydrogen Sulfide at Cimarex Rands Butte Project Using ALOHA

Prepared for

Cimarex Energy

Prepared by

SWCA Environmental Consultants

January 2010

Dispersion Modeling of Hydrogen Sulfide at Cimarex Rands Butte Project Using ALOHA

Prepared for

Bureau of Land Management
Pinedale Field Office

Prepared by

SWCA Environmental Consultants
1043 Coffeen Avenue, Suite D
Sheridan, Wyoming 82801
(307) 673-4303
www.swca.com

January 2010

1.0 INTRODUCTION

The proposed development and production of the complex gas mixture of the Madison Formation has been proposed by the Cimarex Energy (Cimarex) in the Rands Butte Gas Development Project (Project) Environmental Assessment, located in southwestern Sublette County, Wyoming. The Project would produce a gas mixture that includes the presence of hydrogen sulfide (H_2S), carbon dioxide (CO_2), and natural gas, as well as helium and other natural gas liquids such as ethane, propane, and butane. Development and production of large reserves of natural gas and helium from the Madison Formation has been hampered by the presence of high concentrations of CO_2, a greenhouse gas, and toxic H_2S gas.

The presence of H_2S within the gas stream presents threats to human health as well as other biological receptors. Re-injection of H_2S and CO_2 back to the Madison Formation is the proposed method of disposal through the use of an acid-gas injection well. This acid-gas would comprise a mixture of 94% CO_2 and 6% H_2S. If a release of H_2S were to occur at concentrations above levels considered to be a risk to an organism's health, a rapid response to a possible emergency situation and evacuation may be necessary.

An applied model, the ALOHA (Areal Locations of Hazardous Atmospheres) model, is presented in this study which predicts the areal extent of a leak or rupture of the proposed Project. The purpose for the application of the ALOHA Model is to provide predictive estimates of potential impacts to human health and safety for the general public. Model output was in the form of 17 dispersion diagrams of the distance from area of leakage to levels of concern for H_2S under a range of atmospheric conditions commonly occurring in the Rands Butte Project Area (RBPA).

With the use of a predictive air dispersion model, it can be shown that a release of a chemical, in this case H_2S, will disperse out from the source in a predictive nature. The output produced from the predictive air dispersion model is presented within this report.

2.0 ALOHA MODEL DESCRIPTION

The ALOHA Model, developed jointly by the National Oceanic and Atmospheric Administration (NOAA) and the U.S. Environmental Protection Agency (EPA), is a computer program designed to model potential chemical releases, as well as thermal radiation and overpressure related to toxic chemical releases resulting from, fires, and/or explosions (EPA and NOAA 2007).

2.1 MODEL DEVELOPMENT AND PURPOSE

ALOHA is a dispersion model that requires the input of simple, easily obtainable local data to determine areas of concerns regarding significant threshold values for toxicity for a chemical of concern. These data include climatic conditions such as ambient air temperature, wind speed, as well as atmospheric stability. Other data inputs include the chemical of concern, the source, and physical properties of the release such as temperature and pressure of the chemical, and volume of chemical released.

Dispersion through the lower atmosphere is the movement of a mass of air and the chemicals in that mass by both advection (downwind) and diffusion (crosswind) (EPA and NOAA 2007). ALOHA applies two types of models to calculate the downwind movement and concentration levels of gaseous dispersion: Gaussian and heavy gas dispersion model. Gaussian dispersion assumes the development of a normal bell-shaped concentration level as the chemical moves downwind. The concentration axis perpendicular to the downwind air movement spreads out at the same time the peak of the bell curve becomes shallower. The concentration levels of the toxic air mass decrease as the chemical disperses downwind. A heavy gas dispersion model assumes that at the first release of a heavy gas, which is heavier than the surrounding air mass, the gas will sink and slowly spread out downwind. As the gas cloud starts to disperse downwind, the gas cloud becomes more diluted and accelerates dispersion of the gas by diffusion.

ALOHA will also model a chemical that is a gas under normal pressure and temperature but is stored or transported as a liquid under high pressure. If a release occurs when the chemical is pressurized, a two-phased release of both a liquid and a gas will occur. This is termed a flash-boiling release as the liquid rapidly vaporizes to a gas as the product disperses from the release site. The relatively low concentration of H_2S in the byproduct gas stream under investigation for the Rands Butte Project, in combination with the high concentration of CO_2 which remains gaseous under high pressure, eliminates the concern for flash-boiling release in the model.

2.2 MODEL LIMITATIONS

Because ALOHA is a simple dispersion model not requiring detailed input, it has limitations in predicting actual conditions which may occur under the following environmental conditions:

- very low wind speeds;
- very stable atmospheric conditions;
- wind shifts;
- particulates or chemical mixing; or
- concentration patchiness, particularly near the release source; or
- terrain steering effects (EPA and NOAA 2007).

Based on these factors the model for the Project included only wind speeds of a minimum 5 miles per hour (mph), unstable atmospheric conditions, and only the chemical release of H_2S were included in the model to reduce the effect of these limitations. However, since the Project source location for H_2S gas leak occurs near steep terrain with potential for downslope gas dispersion effects, model results will not be completely accurate and final interpretation of gas dispersion for the Project must take into account the drainage patterns of the Project Area.

3.0 MODEL INPUTS FOR THE CIMAREX PROJECT

Because of ALOHA's limitations in modeling chemical mixtures, only the H_2S component of the gas stream was modeled. Since the Cimarex Project is a continuous stream process and does not hold sour gas in tanks during processing, the inflow and outflow pipelines would contain the largest volume of sour gas at any given time. In the event of a pipeline rupture the total volume of H_2S that could be released into the atmosphere is calculated based upon the following parameters:

- Area of pipe, assuming complete rupture;
- Length of pipeline containing acid-gas;
- Total volume of pipeline;
- Gas release duration;
- Gas release rate;
- The concentration of H_2S in pipeline.

SWCA evaluated the Cimarex proposed sour gas operations to determine the parameters to input into the ALOHA model to estimate the maximum potential gas dispersal using these parameters. Three scenarios were evaluated and modeled as possible worst case gas release scenarios:

- A rupture at the sour gas pipeline;
- A rupture at the acid-gas injection wellhead or acid-gas pipeline without added check valve technology;
- A rupture at the acid-gas pipeline with added check valve technology.

The operation of the Madison Formation production wells would deliver raw sour-gas to the M&HRF plant for processing. The 1.45 mile pipeline would carry a gas stream containing an H_2S concentration of approximately 3.6% by volume. During normal production, based upon the total length (7,656 ft) and inside diameter of the pipeline (5.187 in), the total volume of H2S would be just over 44 cubic. Based on this calculation, a release of H_2S from the production wells and the adjoining sour-gas production pipeline would not result in a worst case scenario.

Due to the gas stream processing at the M&HRF (i.e., the removal of the salable methane and helium, as well as the produced water), the H_2S concentration transported to the acid-gas injection well will be greater than the concentrations transport from the gas wells to the M&HRF. Gas processing at the M&HRF would increase the concentration of H_2S as a component of the waste gas stream, and transport it under pressure to the acid-gas injection wellhead for disposal. The total distance from the M&HRF to the acid-gas injection well is 1.45 miles (7,656 feet) and would contain the highest expected concentration and volume of H_2S, consisting of a mixture of CO_2 (94%) and 110 cubic feet of H_2S (6%). The acid-gas mixture would be transported to the acid-gas well in a 6.625-inch outside diameter pipeline; the inside diameter of the pipeline is

5.1870 inches, and would be injected at the well head under a constant pressure of 2,250 pounds per square inch-gauge (psig).

Cimarex design includes a check valve feature in the acid-gas pipeline leading from the M&HRF to the injection wellhead and other sour gas pipelines pipelines. A check valve is a mechanical valve located mid-way in the pipeline length, which allows gas to flow in one direction only from the M&HRF to the injection well. If the direction of gas flow reverses because of a potential failure of the pipeline including a pipeline rupture, the valve closes and isolates gas behind the valve, effectively cutting the potential volume of the release in half. The total volume of gas released from the pipeline with an installed check valve would therefore be about 55 cubic feet at any given time of operation, based on pipeline diameter and operational pressure.

Based on these evaluations, the worst worst-case scenario for gas release would occur at the acid gas injection pipeline without the added check valve technology. The total volume of H_2S that could be released into the atmosphere in the worst case scenario is calculated based upon the following parameters:

- Area of pipe, assuming complete rupture: 0.239 square foot (34.47 square inches).
- Length of pipeline containing acid-gas: 7,656 feet.
- Total volume of pipeline: 1,830 cubic feet.
- Concentration of H_2S in pipeline: 6% of gas.
- Gas release duration: 1 minute.
- Gas release rate: 85.3 pounds/second.

Based on the worst-case calculation the total volume of gas released would be 5,119 pounds and 110 cubic feet of H_2S. However, model runs were also included for the lower total volume calculations of 55 cubic feet and 44 cubic feet of H_2S.

In addition to the three potential volumes of a potential gas release, other model inputs included the following parameters and variables that are typical of the RBPA and would affect the distance of dispersal should an accidental release occur:

- Wind direction (West);
- Wind speed (5 and 30 miles per hour (mph));
- Air temperature (0, 45, 75 degrees Fahrenheit (°F));
- Atmosphere stability (Unstable and Moderately unstable);
- Humidity (25% and 50%); and
- Cloud cover (0% and 50%).

4.0MODEL OUTPUTS FOR THE CIMAREX PROJECT

The ALOHA model output includes H_2S levels of concentration (LOCs) based upon concentration levels of increasing threat to safety for any biological receptors which may be located within the specific LOC. Distances from the H_2S source to the extent where the LOC is expected to be present are based upon model inputs. Table 1 shows the levels of concentration and toxicity for H_2S. Based on this information, concentrations of 10 parts per million (ppm), 100 ppm, and 500 ppm were identified as output LOCs.

Table 1. Hydrogen Sulfide Physical Effects at Specified Concentrations.

Concentrations (ppm)	Physical Effects
0.13	Minimal perceptible odor.
10	Obvious and unpleasant odor. OSHA Permissible Exposure Limit (PEL) (8-hour exposure).
15	OSHA Short-term Exposure Limit (15-minute exposure).
100	Impairs the sense of smell in 3 to 15 minutes. Immediately dangerous to life and health.
500	Dizziness, breathing stops in a few minutes. Needs prompt artificial respiration.
700	Unconscious quickly. Death would result if not recued promptly.
1000	Unconscious immediately, followed by death within minutes.

*Table obtained from ConocoPhillips EP Lower 48 Health, Safety, and Environmental Handbook (2006).
ppm = parts per million

Table 2 provides a list of inputs for each successive model run based on a range of climatic conditions which could be encountered at the RBPA. The model output for each set of conditions is shown graphically in Section 5.0. Results for the distance to LOC from each ALOHA model run are also listed within the table.

ALOHA modeling results show the volume of H_2S present (110 cubic feet) during the operation of the RBPA. A release of this volume of gas at the following climatic conditions would be considered the worst-case scenario:

- west wind of 30 mph;
- air temperature of 45 degrees Fahrenheit or greater; and
- a moderately unstable atmosphere.

The model predicts that location of any biological receptor within a 10 ppm LOC may require notification and/or evacuation within a range of 1.3- to 3.8-mile distance from the potential H_2S release. The area where the safety of any human may be in question and an evacuation may be necessary ranges from 0.63 to 1.50 miles from a potential source. A mandatory evacuation for any biological receptor would be necessary within distances of 0.27 to 0.73 mile from a potential release of H_2S. Areal extent diagrams for the LOCs under different modeled conditions are presented in Section 5.0 of this report.

The nearest residences from any production activities within the RBPA site are about 4.2 miles from the M&HRF site. The ALOHA Model indicates that greatest distance of dispersal from any potential release source of H_2S with a LOC for human health and safety within the RBPA site is 3.8 miles. Based upon the results of this modeling study, no mandatory evacuations of the general public would be necessary should a leak occur from the Project, unless real-time site monitoring of onsite conditions decrease.

This predictive model indicates that, in the rare event of an accidental severe leak or rupture, the proposed Project would not endanger human health and safety of the general public within the RBPA. With the added check valve technology, H_2S monitoring equipment, automatic shut down, and emergency response measures contained in the Cimarex Emergency Contingency Plan, the general public would not be in danger in the event of a H_2S leak in the future. However, any personnel working outdoors in the vicinity of the M&HRF, acid-gas injection well or sour gas wells would require immediate personal protective measures, as identified in the Emergency and Contingency Plan.

Table 2. ALOHA Model Output for Climatic Conditions with Levels of Concentration Distance.

Figure #	Volume of H_2S Release (cf)	Wind Direction	Wind Speed (mph)	Air Temperature (°F)	Atmosphere Stability*	Humidity (%)	Cloud Cover (%)	Level of Concentration Distances (miles)		
								10 ppm	100 ppm	500 ppm
1	110	W	5	75	B	25	50	2.80	1.30	0.73
2	110	W	30	75	D	25	50	3.80	1.50	0.64
3	110	W	5	75	B	50	0	2.80	1.30	0.73
4	110	W	30	75	D	50	0	3.80	1.50	0.63
5	55	W	5	75	B	25	50	2.60	1.10	0.61
6	55	W	30	75	D	25	50	2.90	1.00	0.44
7	110	W	5	45	B	50	50	2.70	1.30	0.72
8	110	W	30	45	D	50	50	3.70	1.40	0.62
9	55	W	5	45	B	25	50	2.60	1.20	0.63
10	55	W	30	45	D	25	50	2.80	1.00	0.43
11	110	W	5	0	B	5	50	1.30	0.63	0.36
12	110	W	30	0	D	5	50	2.80	1.00	0.40
13	55	W	5	0	B	25	50	1.40	0.66	0.38
14	55	W	30	0	D	25	50	2.10	0.70	0.27
15	44	W	30	75	D	25	50	2.70	0.92	0.39
16	44	W	30	45	D	25	50	2.00	0.64	0.25
17	44	W	30	0	D	25	50	1.90	0.61	0.24

* B = Unstable; D = Moderately Unstable

°F = degrees Fahrenheit
cf = cubic feet
mph = miles per hour
ppm = parts per million
W = west

5.0 ALOHA MODEL OUTPUT DIAGRAMS FOR CIMAREX PROJECT

The diagrams that follow show the three identified LOCs for potential release of H_2S under specified atmospheric conditions and leak parameters, as identified in Table 1.

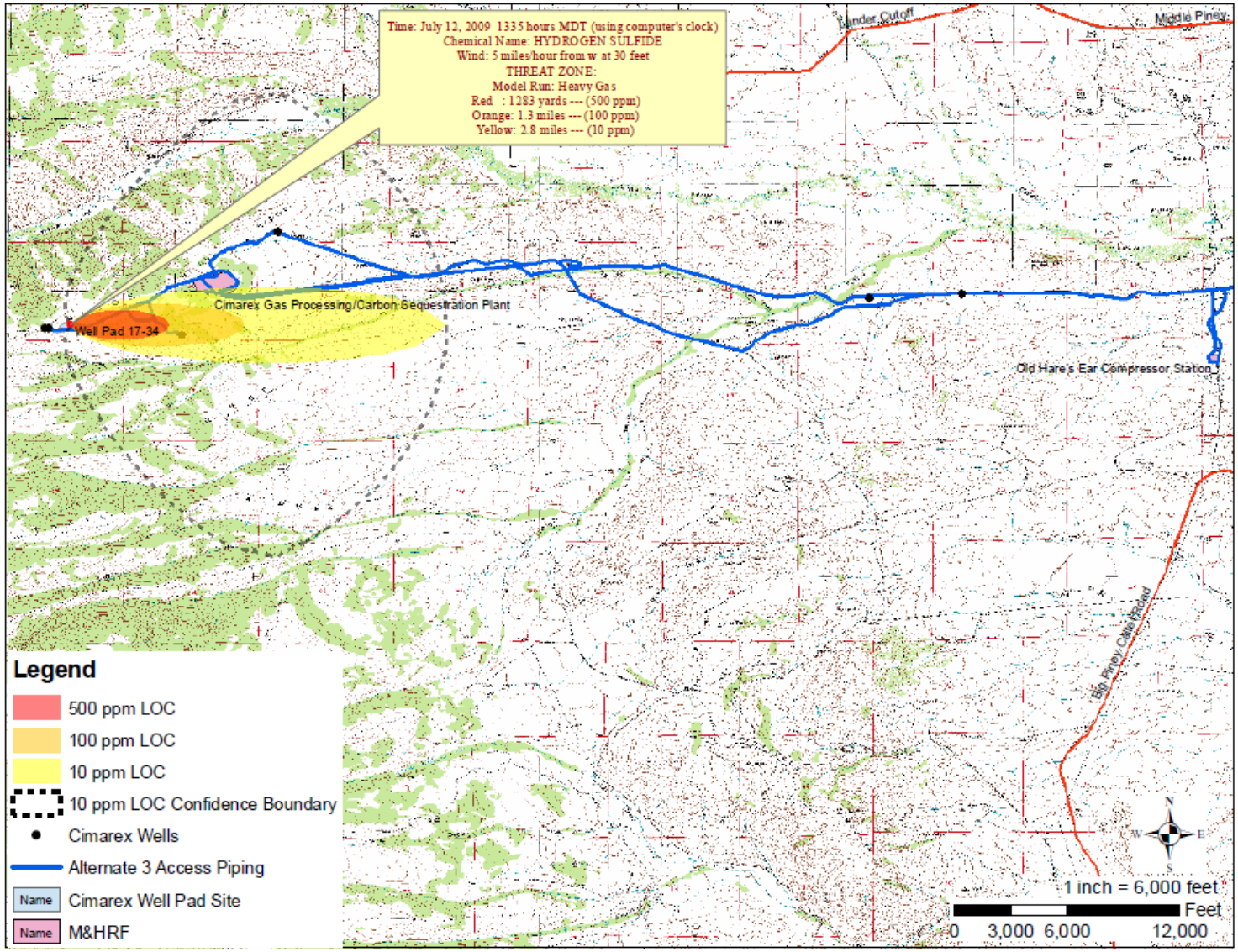

Figure 1. Modeled LOC for H2S Release at Acid-gas Injection Well (No Check Valve) with West Wind at 5 mph, 75° F, Unstable Atmosphere, 25% Humidity, and 50% Cloud Cover.

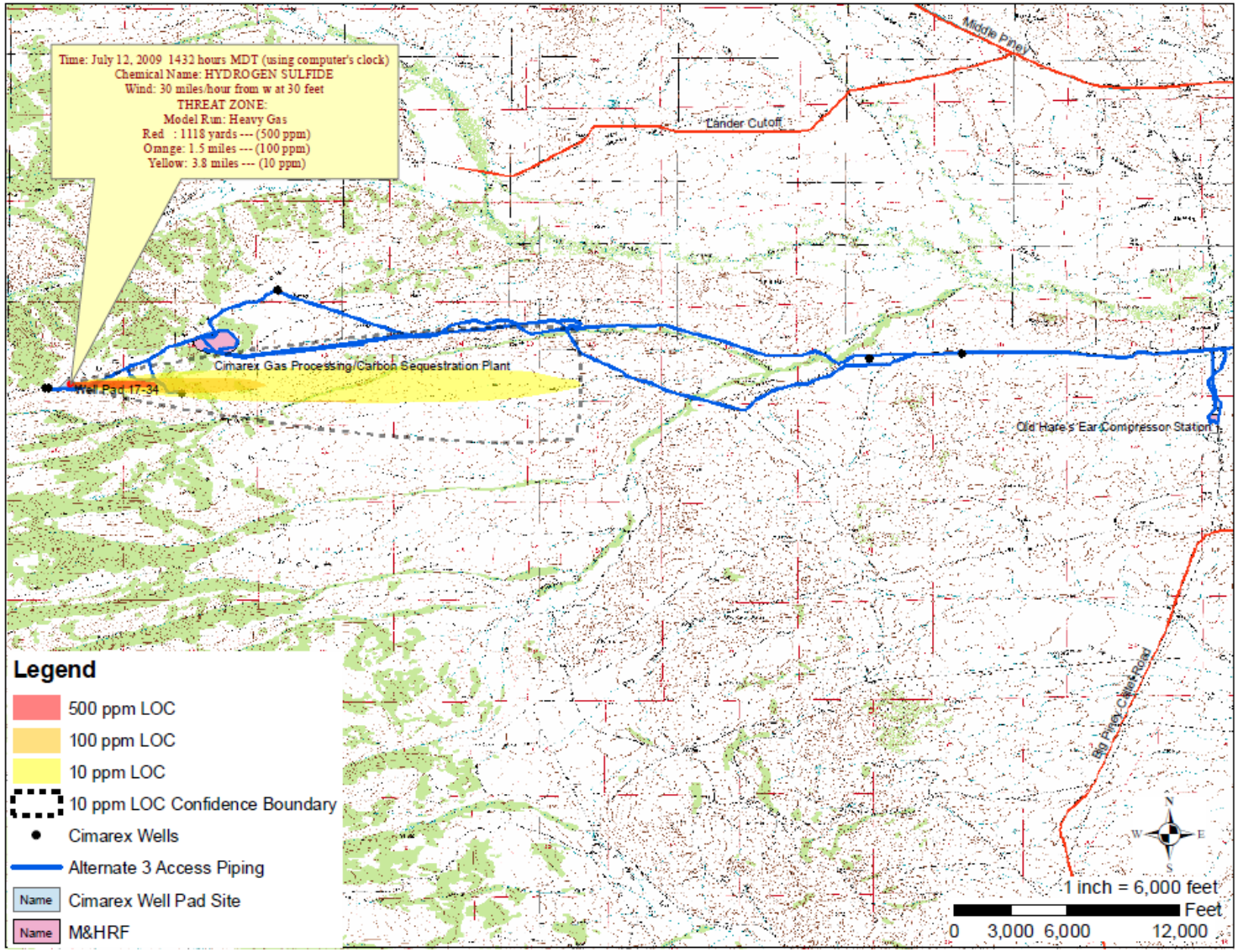

Figure 2. **Modeled LOC for H_2S Release at Acid-gas Injection Well (No Check Valve) with West Wind at 30 mph, 75° F, Moderately Unstable Atmosphere, 25% Humidity, and 50% Cloud Cover.**

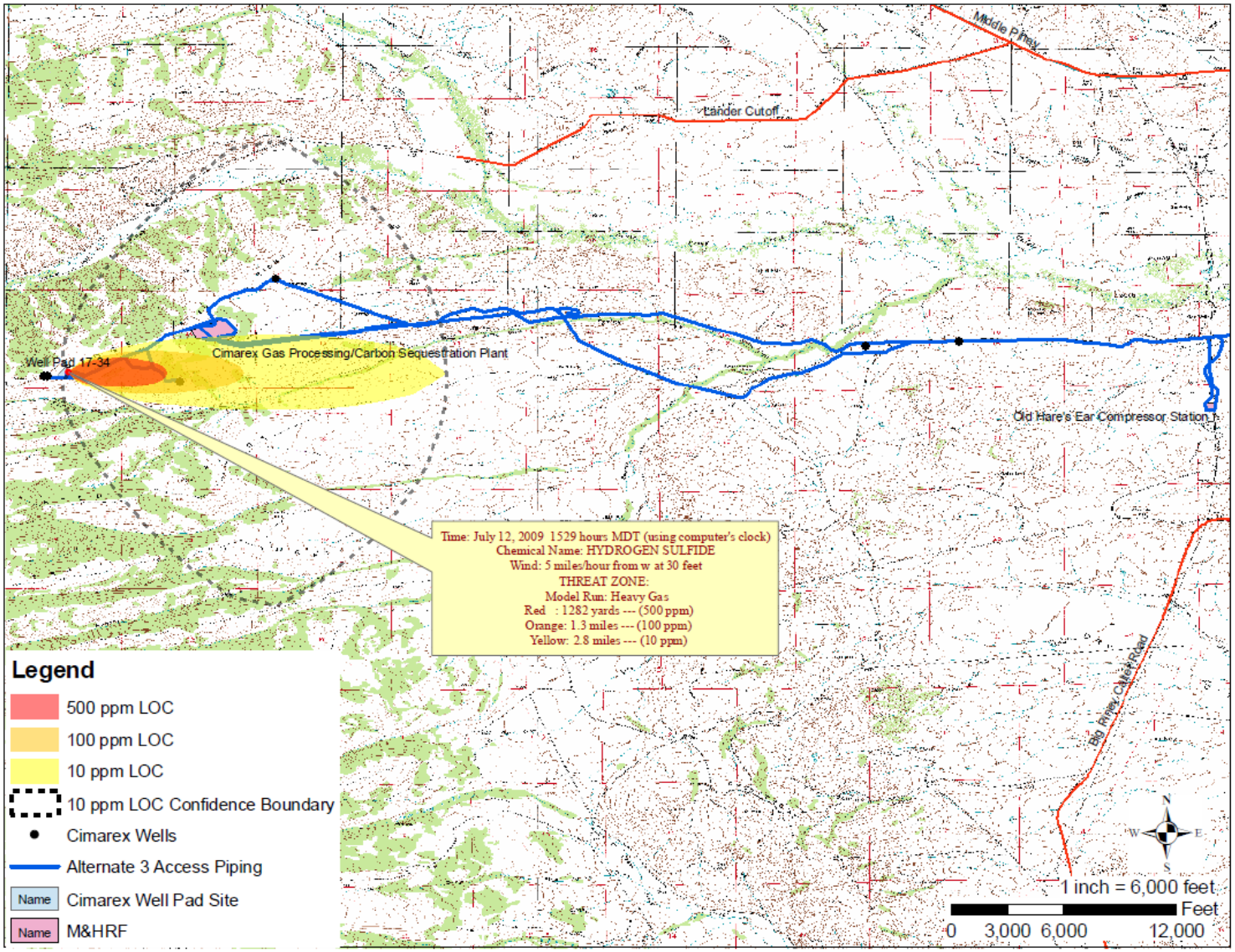

Figure 3. Modeled LOC for H2S Release at Acid-gas Injection Well (No Check Valve) with West Wind at 5 mph, 75° F, Unstable Atmosphere, 50% Humidity, and 0% Cloud Cover.

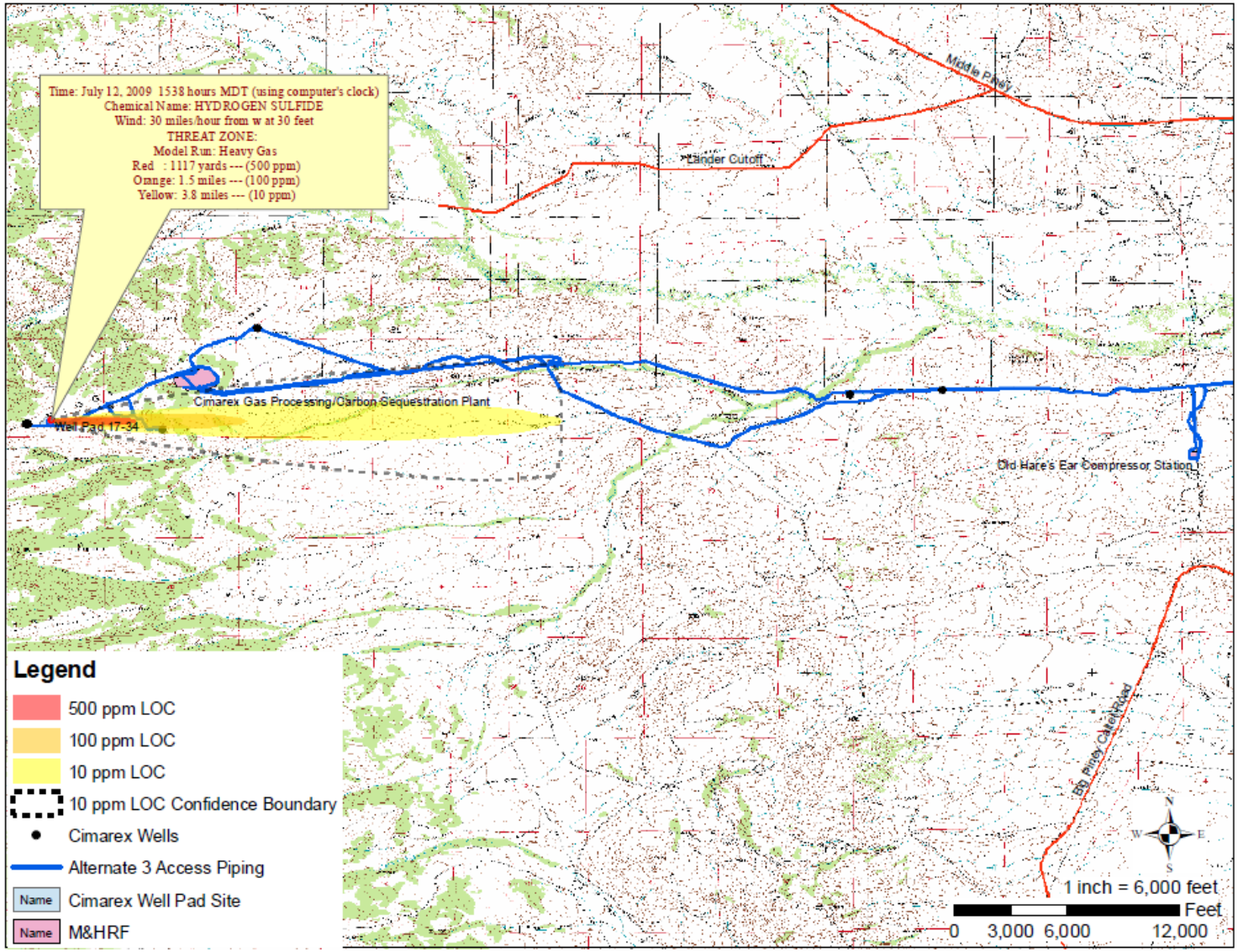

Figure 4. Modeled LOC for H2S Release at Acid-gas Injection Well (No Check Valve) with West Wind at 30 mph, 75° F, Moderately Unstable Atmosphere, 50% Humidity, and 0% Cloud Cover.

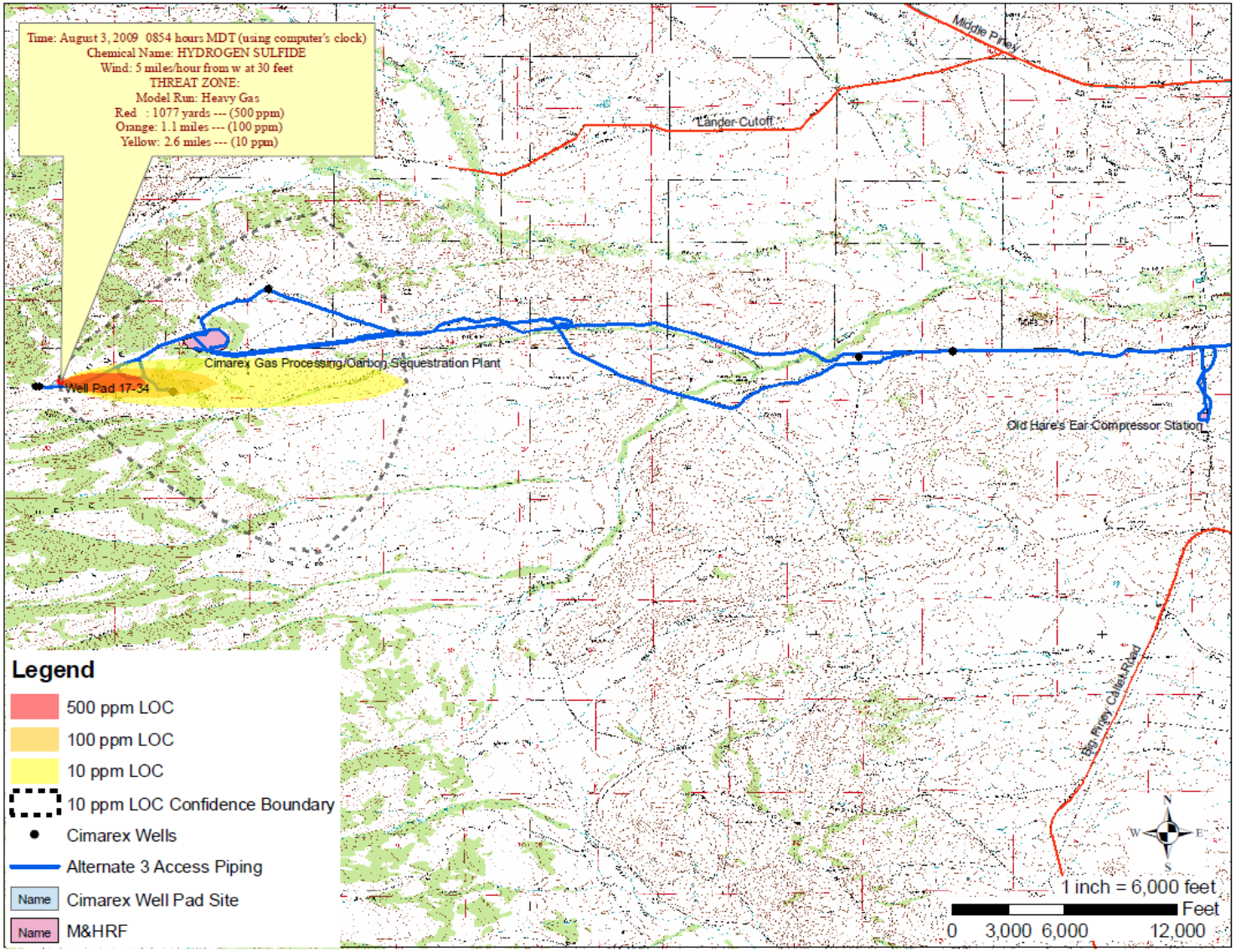

Figure 5. Modeled LOC for H2S Release at Acid-gas Injection Well (With Check Valve) with West Wind at 5 mph, 75° F, Unstable Atmosphere, 25% Humidity, and 50% Cloud Cover.

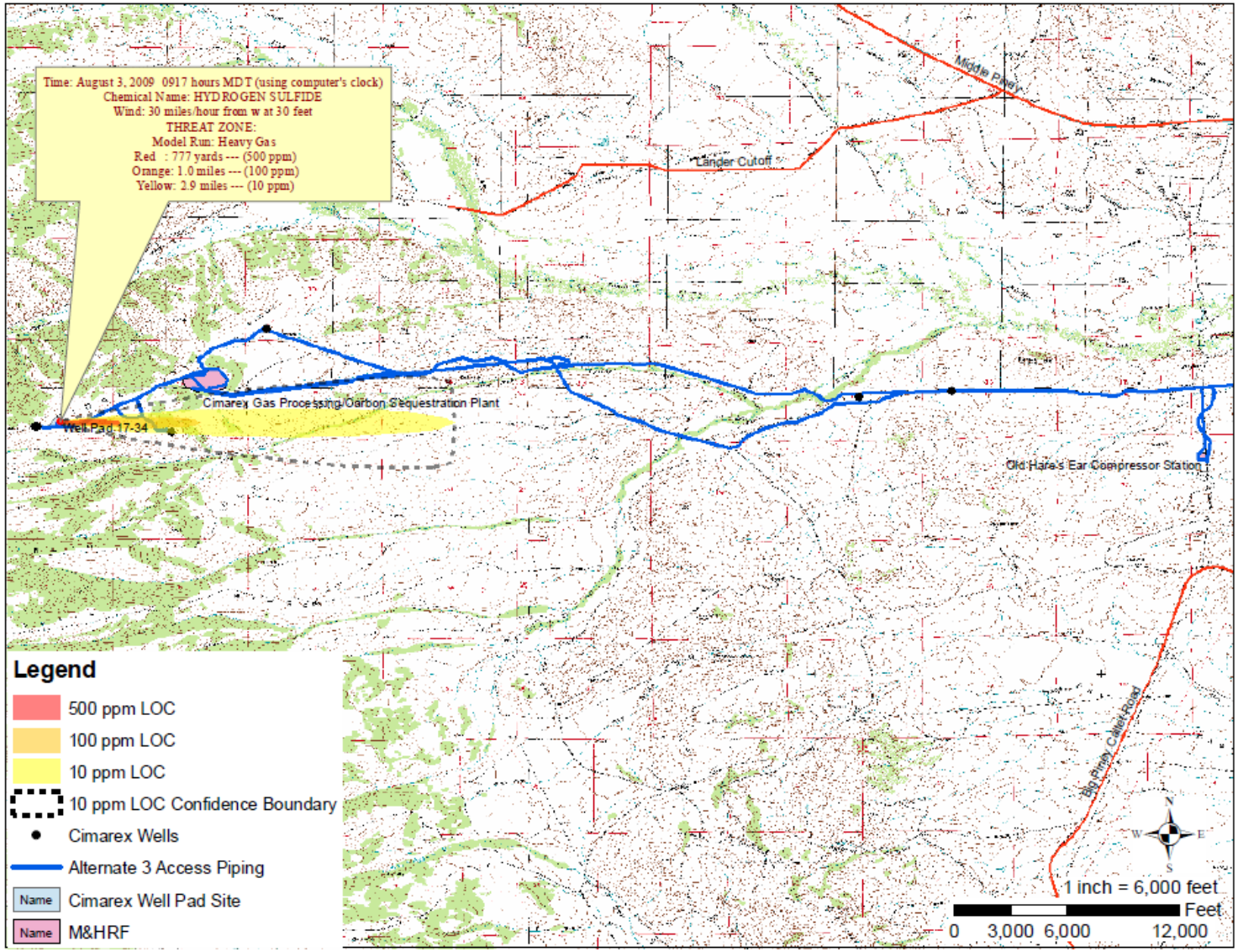

Figure 6. Modeled LOC for H2S Release at Acid-gas Injection Well (No Check Valve) with West Wind at 30 mph, 75° F, Moderately Unstable Atmosphere, 25% Humidity, and 50% Cloud Cover.

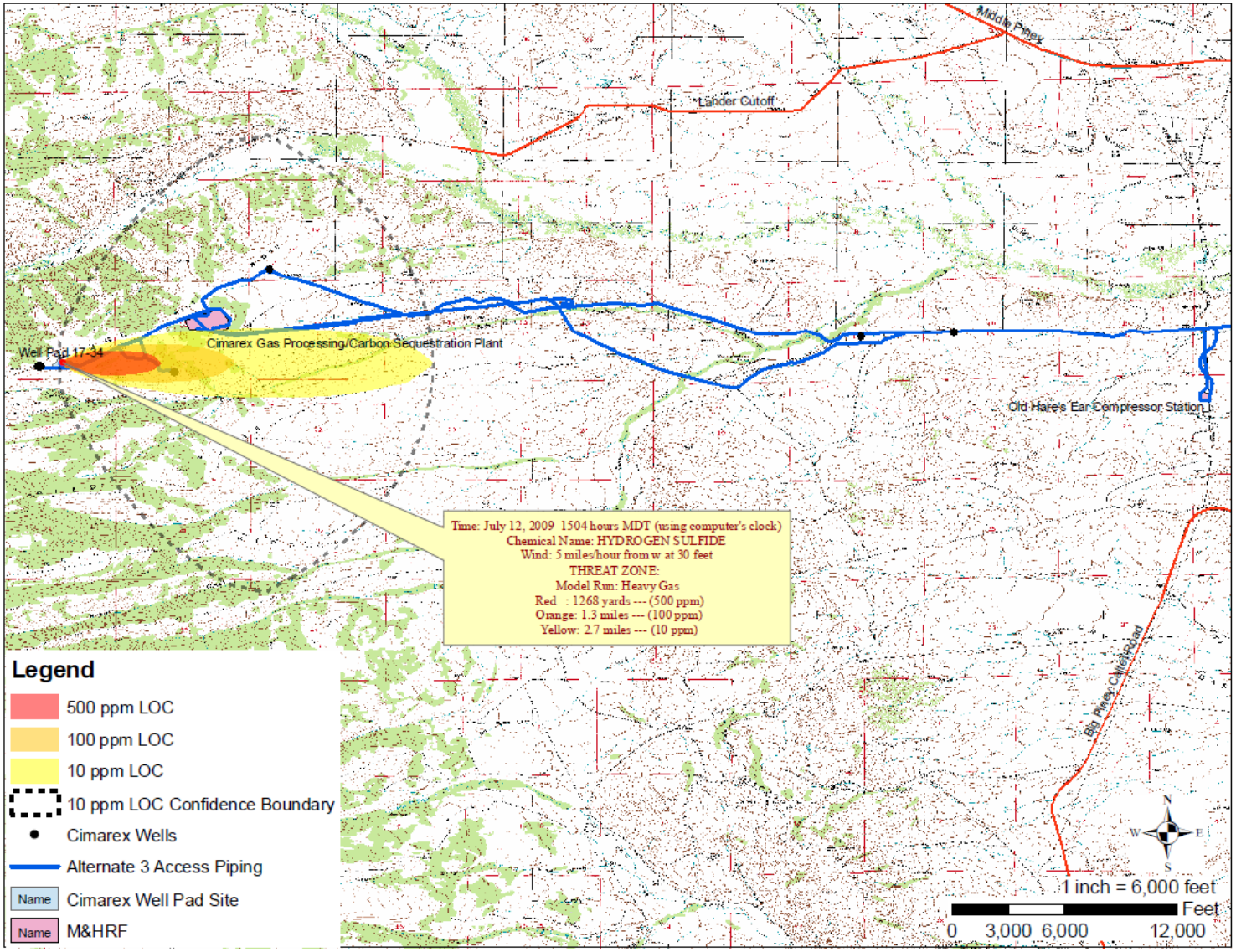

Figure 7. Modeled LOC for H2S Release at Acid-gas Injection Well (No Check Valve) with West Wind at 5 mph, 45° F, Unstable Atmosphere, 50% Humidity, and 50% Cloud Cover.

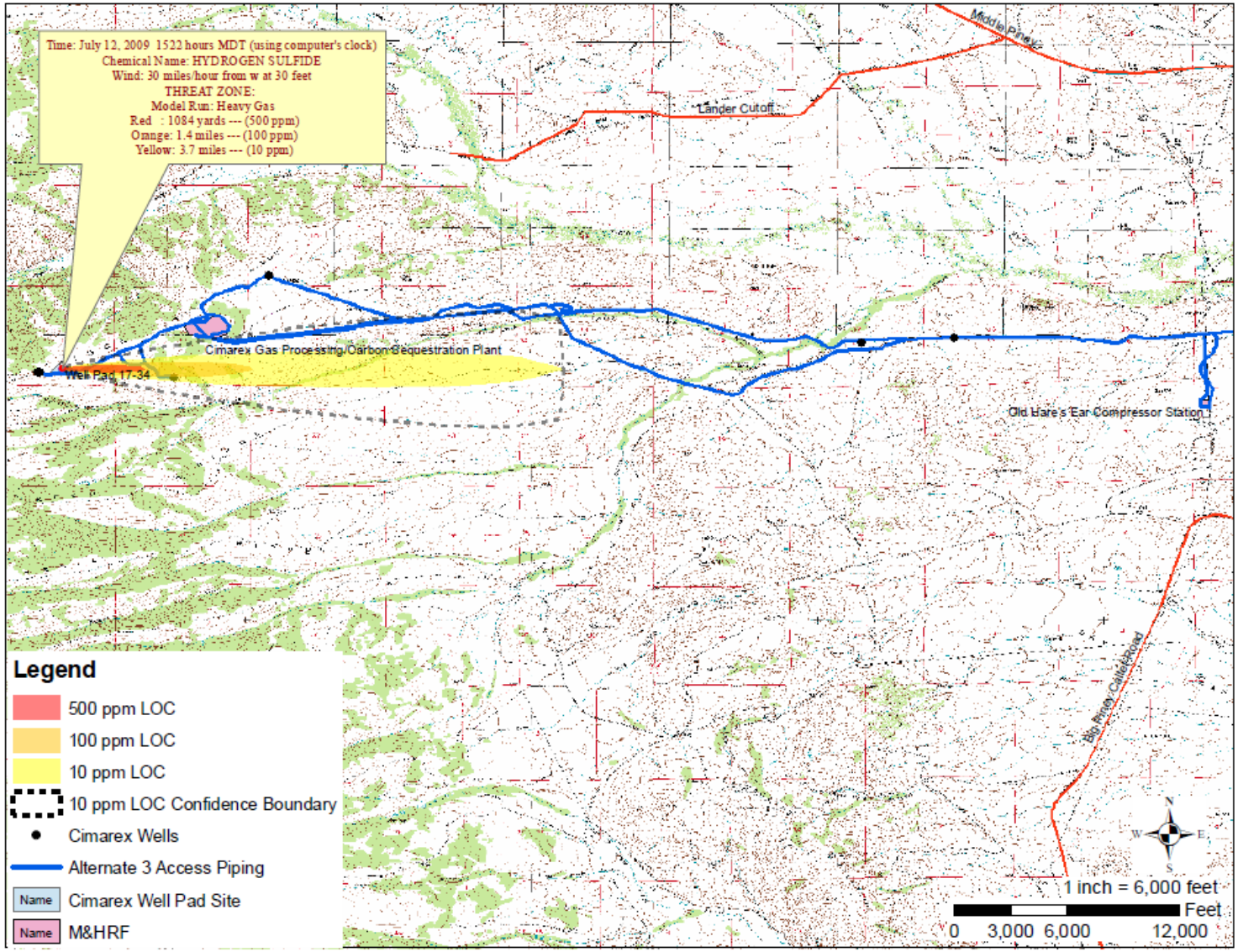

Figure 8. Modeled LOC for H2S Release at Acid-gas Injection Well (No Check Valve) with West Wind at 30 mph, 45° F, Moderately Unstable Atmosphere, 50% Humidity, and 50% Cloud Cover.

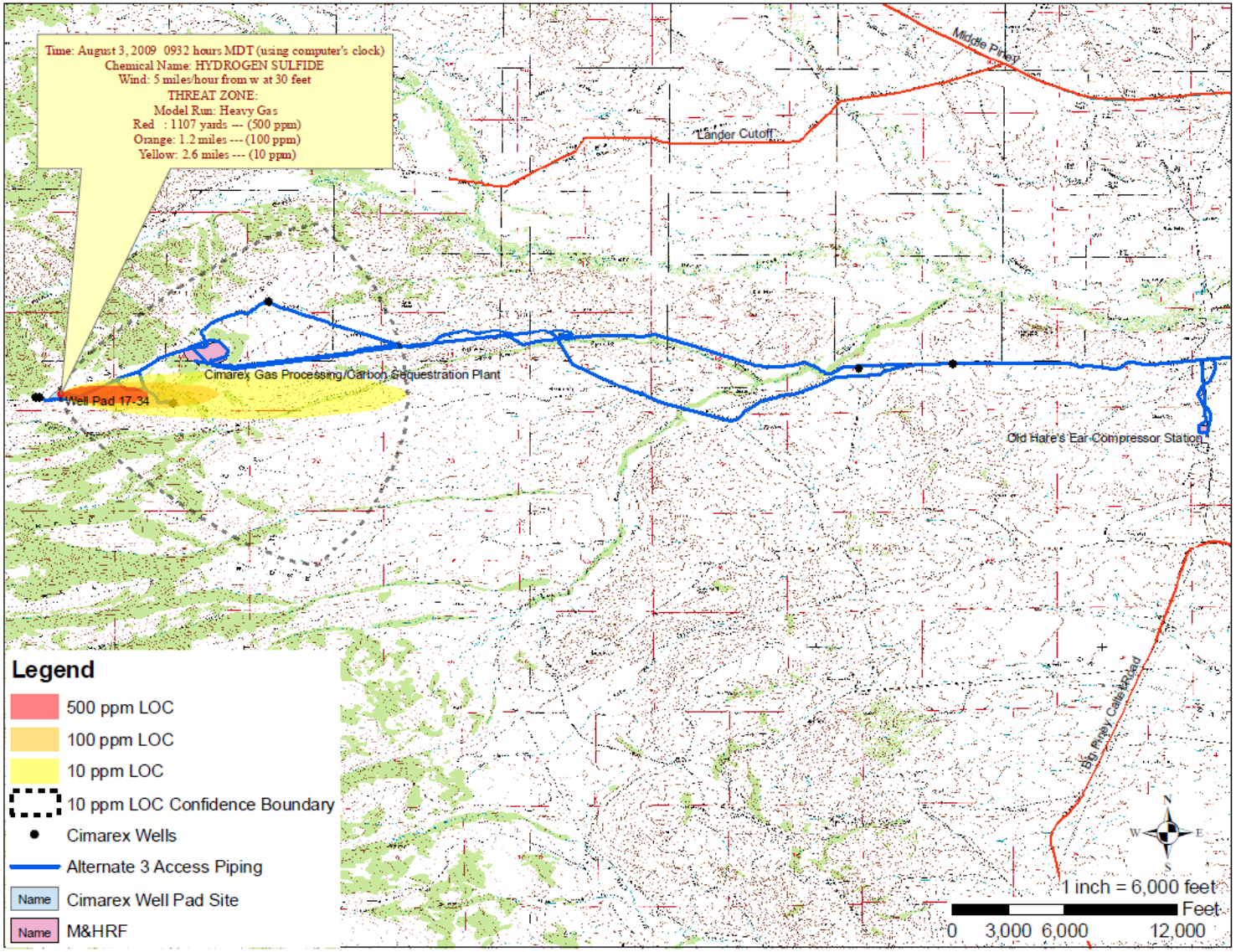

Figure 9. **Modeled LOC for H2S Release at Acid-gas Injection Well (With Check Valve) with West Wind at 5 mph, 45° F, Unstable Atmosphere, 25% Humidity, and 50% Cloud Cover.**

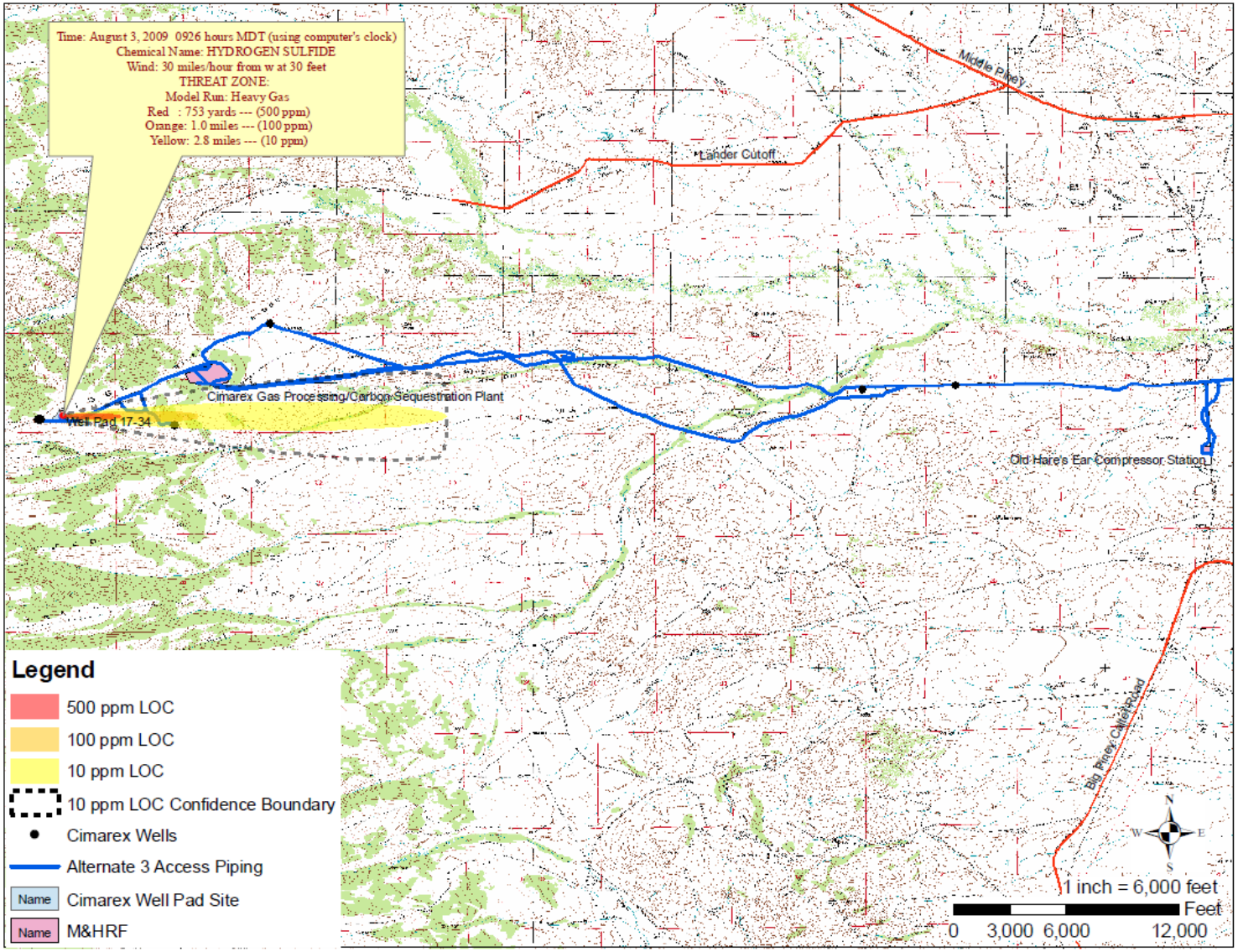

Figure 10. Modeled LOC for H2S Release at Acid-gas Injection Well (With Check Valve) with West Wind at 30 mph, 45° F, Moderately Unstable Atmosphere, 25% Humidity, and 50% Cloud Cover.

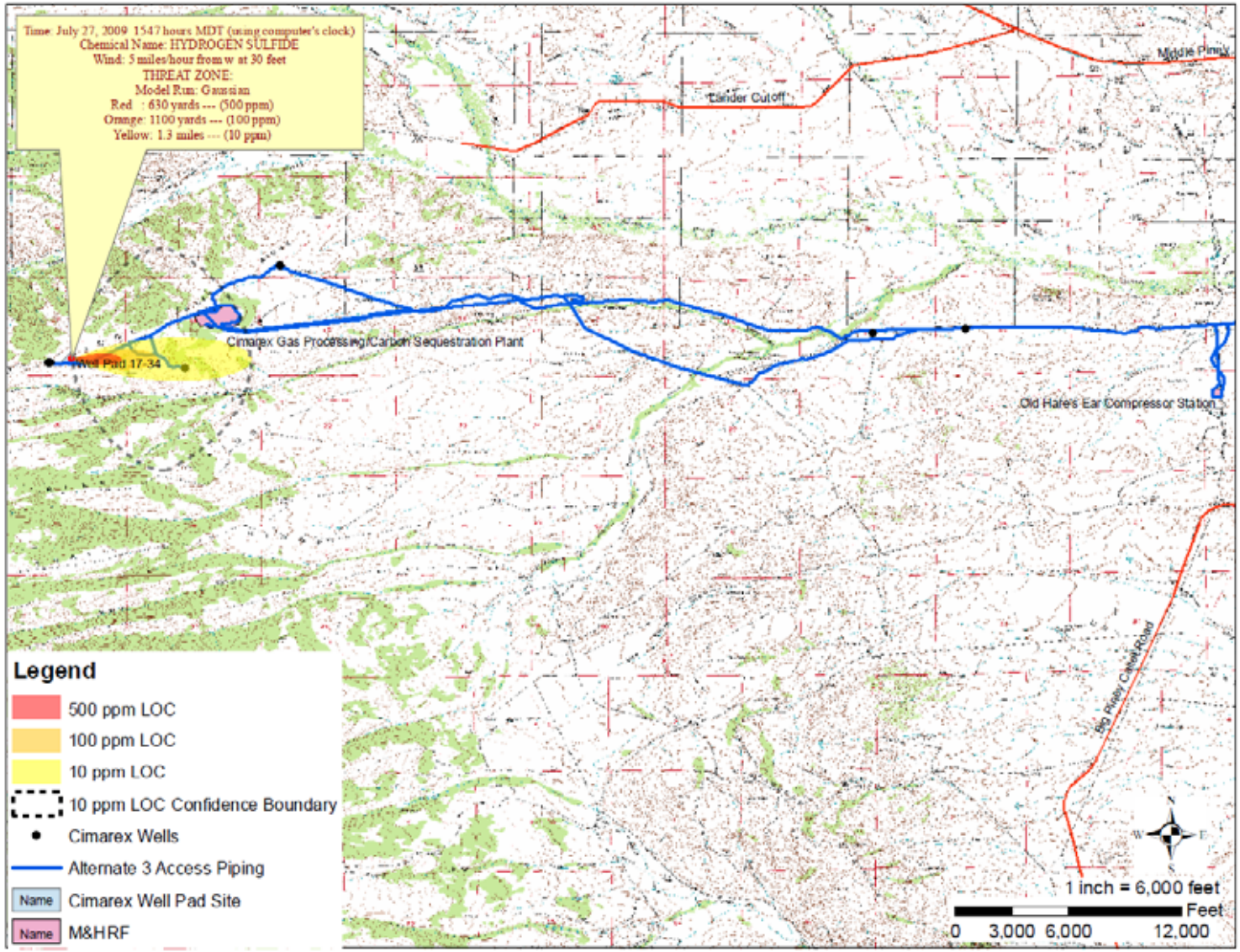

Figure 11. Modeled LOC for H_2S Release at Acid-gas Injection Well (No Check Valve) with West Wind at 5 mph, 0° F, Unstable Atmosphere, 5% Humidity, and 50% Cloud Cover.

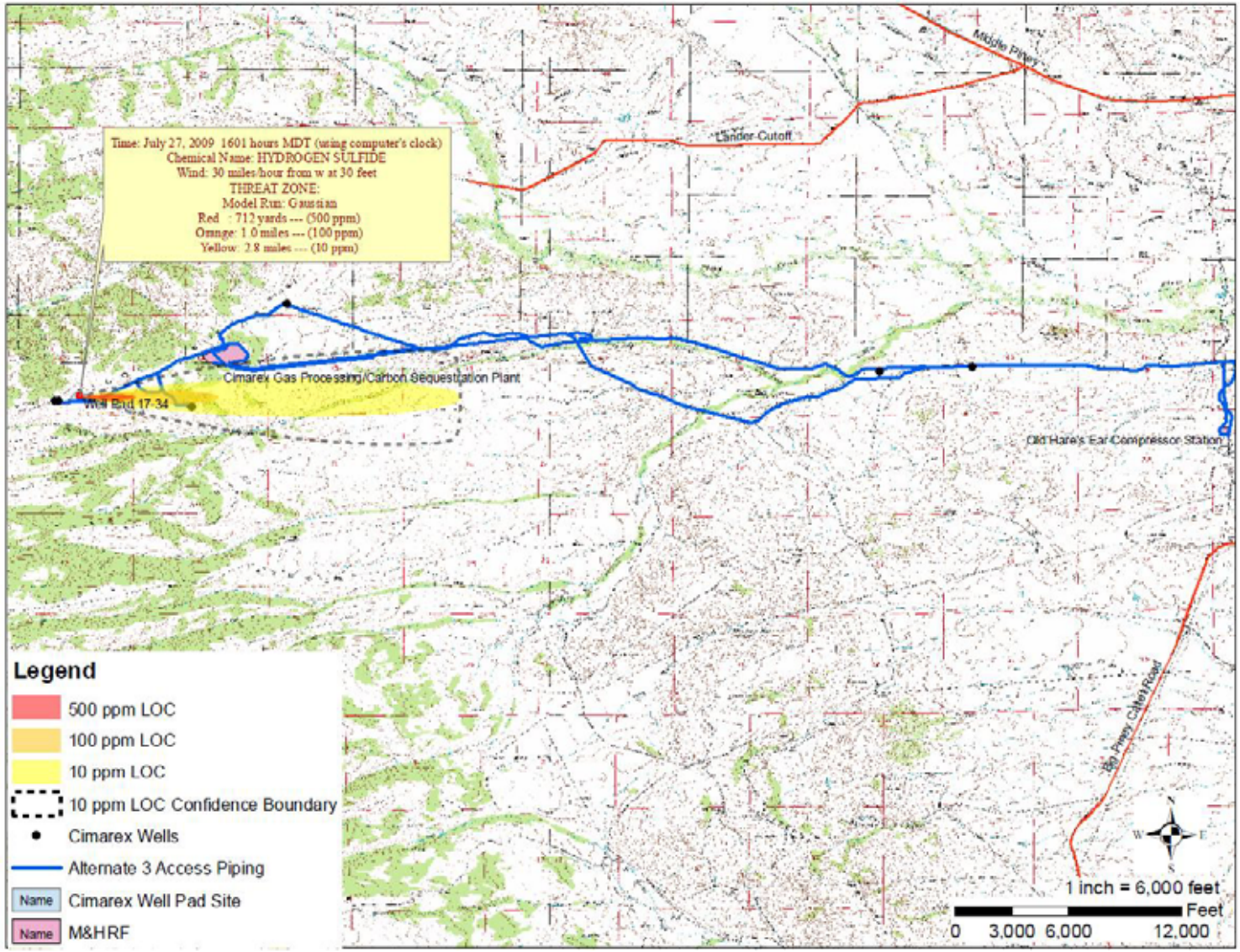

Figure 12. Modeled LOC for H2S Release at Acid-gas Injection Well (No Check Valve) with West Wind at 30 mph, 0° F, Moderately Unstable Atmosphere, 5% Humidity, and 50% Cloud Cover.

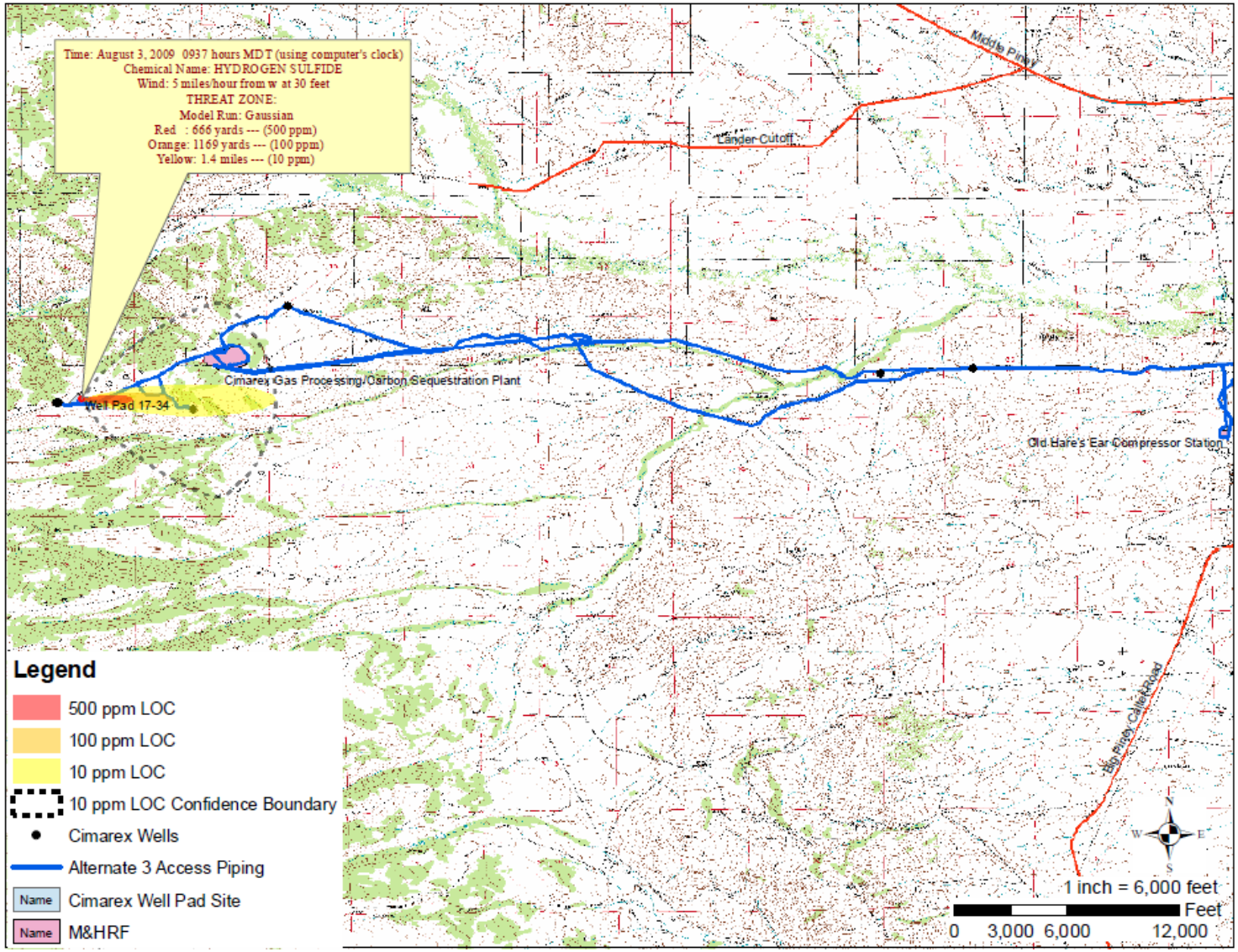

Figure 13. Modeled LOC for H2S Release at Acid-gas Injection Well (With Check Valve) with West Wind at 5 mph, 0° F, Unstable Atmosphere, 25% Humidity, and 50% Cloud Cover.

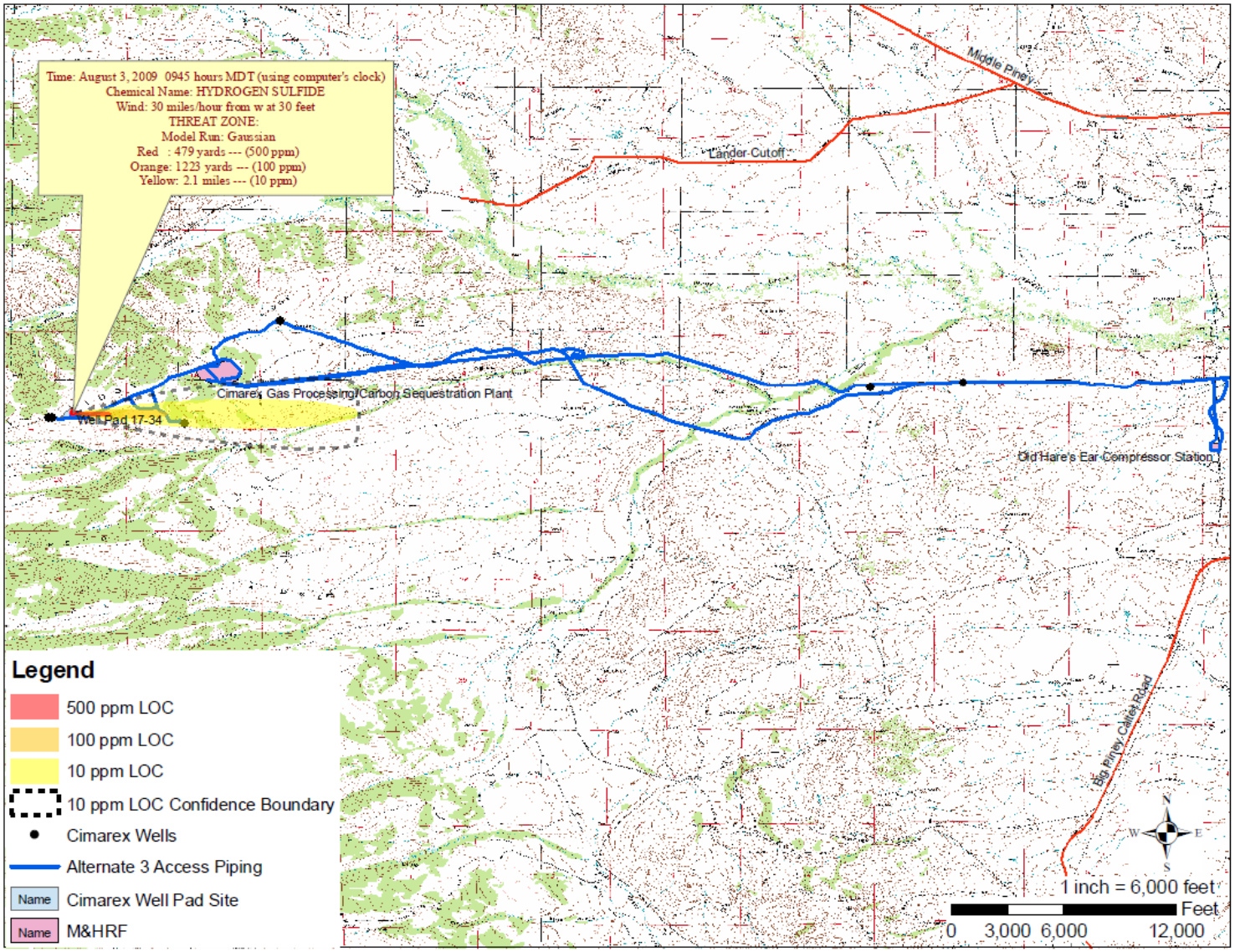

Figure 14. Modeled LOC for H2S Release at Acid-gas Injection Well (With Check Valve) with West Wind at 30 mph, 0° F, Moderately Unstable Atmosphere, 25% Humidity, and 50% Cloud Cover.

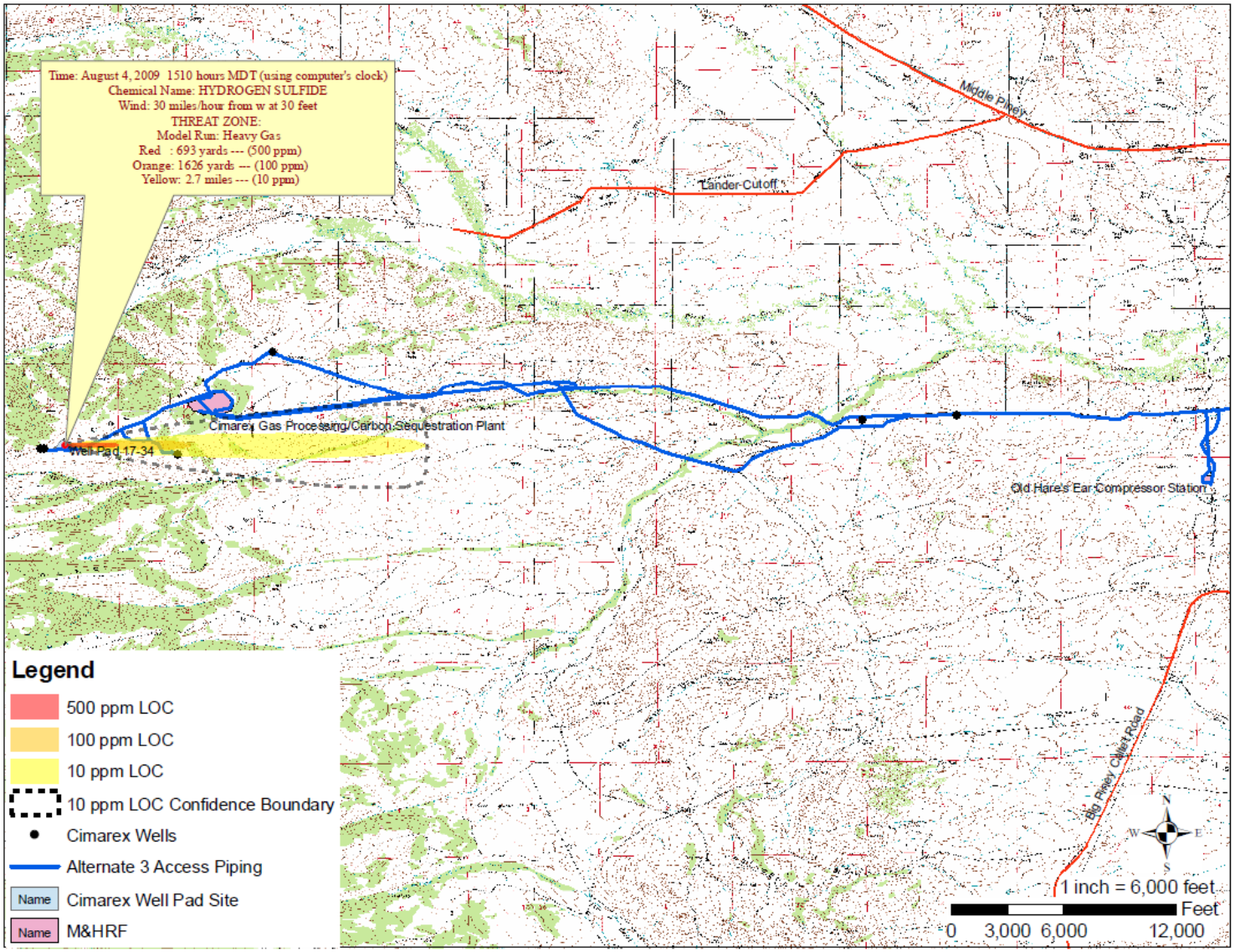

Figure 15. Modeled LOC for H2S Release at Sour Gas Production Well with West Wind at 30 mph, 75° F, Moderately Unstable Atmosphere, 25% Humidity, and 50% Cloud Cover.

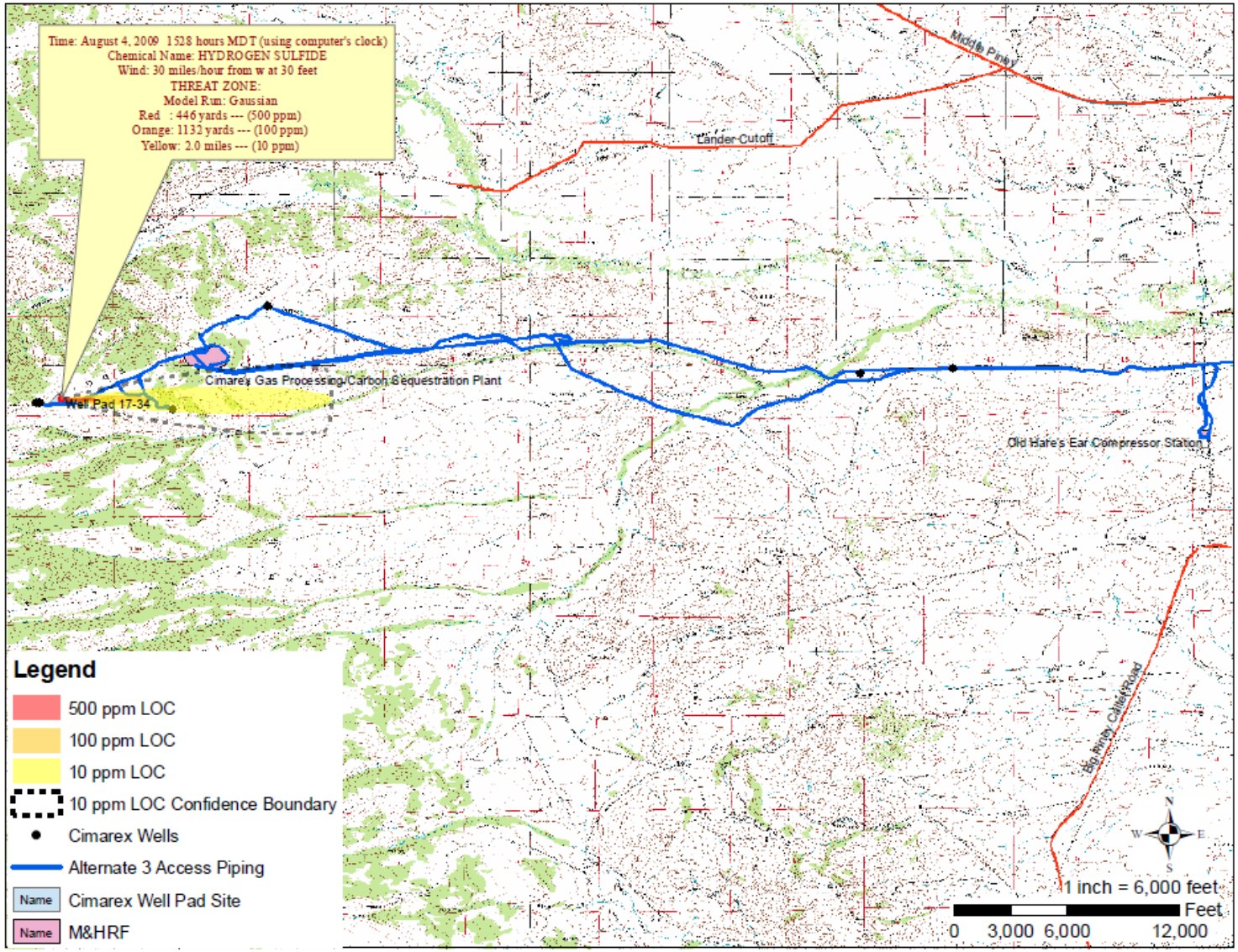

Figure 16. Modeled LOC for H2S Release at Sour Gas Production Well with West Wind at 30 mph, 45° F, Moderately Unstable Atmosphere, 25% Humidity, and 50% Cloud Cover.

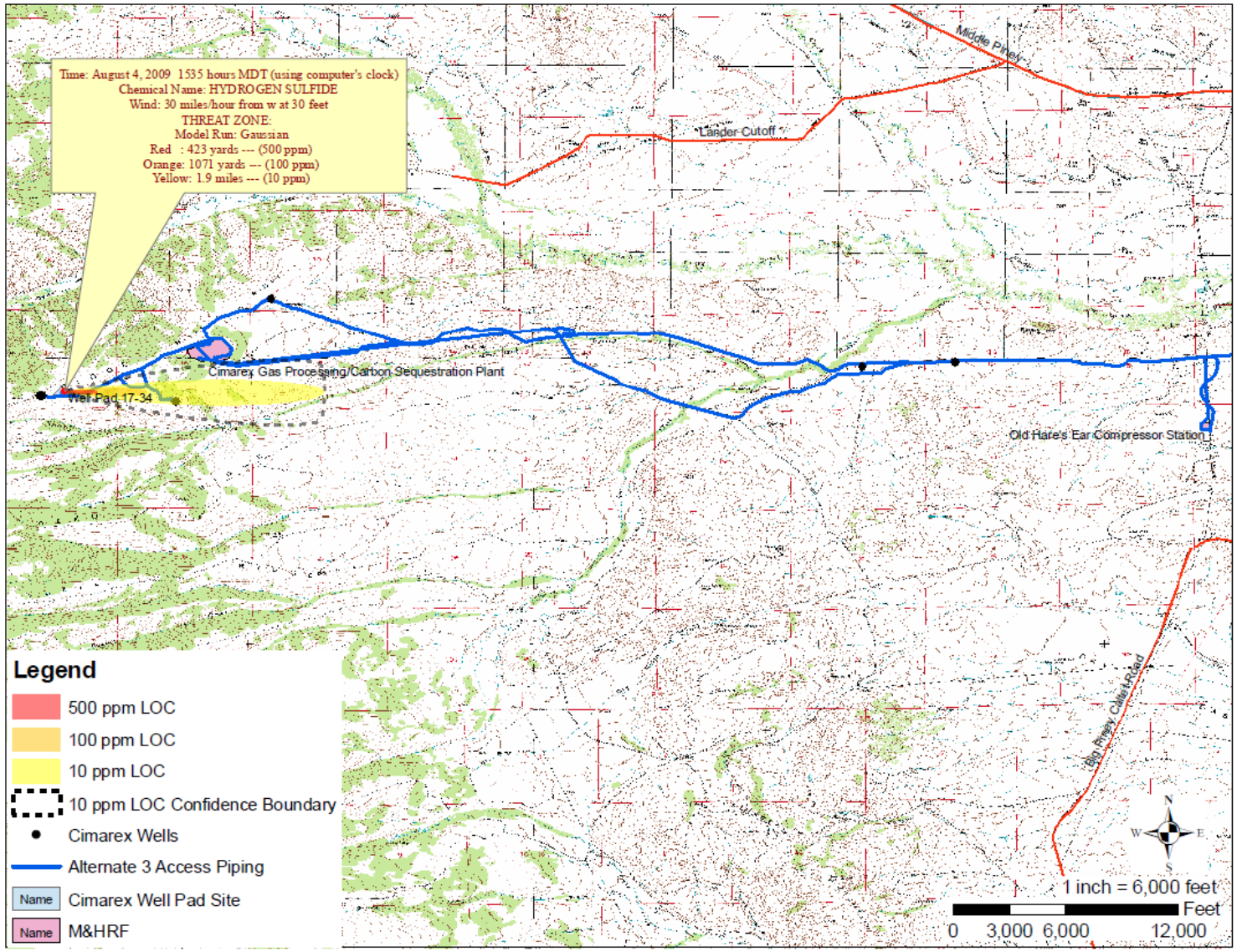

Figure 17. Modeled LOC for H2S Release at Sour Gas Production Well with West Wind at 30 mph, 0° F, Moderately Unstable Atmosphere, 25% Humidity, and 50% Cloud Cover.

6.0 REFERENCES

U.S. Environmental Protection Agency and National Oceanic and Atmospheric Agency (EPA and NOAA). 2007. ALOHA User Manual. The Cameo Software System, Washington, DC.

Appendix G
BLM Pinedale Field Office RMP Mitigation Guidelines and Operating Standards Applied to Surface Disturbing and Disruptive Activities

---

Appendix G
BLM Pinedale Field Office Resource Management Plan
Mitigation Guidelines, Outcomes,
and Operating Standards

Appendix G.
Environmental Assessment for Rands Butte Gas Development Project

Appendix G. of the Environmental Assessment (EA) for Rands Butte Gas Development Project consists of the approved BLM Pinedale Field Office Mitigation Guidelines, Outcomes, and Operating Standards (Pinedale Field Office Resource Management Plan, Record of Decision Appendix 3). This document reserves for BLM the right to (1) modify the operations of all surface and other human presence disturbance activities as part of the statutory requirements for environmental protection, and (2) the addition of specific or specialized mitigation based on the environmental analysis.

Unless additional measures or more stringent standards are otherwise specified in the Final EA or Decision Record, the measures and operating standards included in this document shall be incorporated in entirety as the minimum standards to which federal actions of the Rands Butte Gas Development Project shall comply.

BLM may add additional site-specific restrictions as deemed necessary and as developed through consultation with other federal, state, and local regulatory and resource agencies. Laws or regulations may require other federal , state, and local permits for an oil and gas project to proceed. Specific state permits may be required when the state has primary authority, under federal or state law or regulation, to enforce the provisions in questions. Specific permits issued by federal agencies other than the BLM could include permit conditions that are more stringent and therefore supercede those presented in this document.

MITIGATIONS

General Guidelines

Proposed project development will require the appropriate level of environmental review in accordance with applicable federal, state, and local regulations.

Removal and disturbance of vegetation will be kept to a minimum through construction site management (e.g., using previously disturbed areas and existing easements, limiting equipment/materials storage yard and staging area size).

Where necessary, areas to be disturbed will require inventories or special studies to determine the extent of site-specific impacts and appropriate mitigation. Operators will be required to complete inventories or short-term special studies under guidelines provided by the BLM or as developed through the AM planning process.

There will be no well location or production facility surface occupancy within one-quarter mile of an occupied dwelling to prevent damage to human health and safety and/or other resources. Any surface use or occupancy within such special areas is prohibited or, if absolutely necessary, strictly controlled.

No surface disturbance is permitted on slopes in excess of 25 percent unless erosion controls can be ensured and adequate revegetation is expected. Engineering proposals and revegetation and restoration plans are required in these areas.

Unnecessary topographic alterations will be mitigated by avoiding, where possible, steep slopes, rugged topography, and perennial and ephemeral/intermittent drainages, and by minimizing the area disturbed. Alternative methods of construction to minimize environmental impacts may also be used.

Construction with frozen material or during periods when the soil material is saturated or when watershed damage is likely to occur is prohibited, unless or until an operator, permittee, or his/her designated representative and the surface management agency, prior to development, arrive at an acceptable plan for mitigation of anticipated impacts.

Air Quality

Air quality mitigation will be voluntary or required by the BLM.

In accordance with Wyoming Air Quality Standards and Regulations, Chapter 3, Section 2(f), the emission of fugitive dust will be limited by all persons handling, transporting, or storing any material to prevent unnecessary amounts of particulate matter from becoming airborne to the extent that ambient air standards described in these regulations are exceeded.

Necessary air quality permits to construct, test, and operate facilities will be obtained from the Wyoming Department of Environmental Quality-Air Quality Division (WDEQ-AQD). All internal combustion equipment will be kept in good working order. Best available control technology (BACT) will be implemented as required by WDEQ-AQD.

Operators will comply with all applicable local, state, tribal, and federal air quality laws, statutes, regulations, standards, and implementation plans, including Wyoming Ambient Air Quality Standards (WAAQS) and National Ambient Air Quality Standards (NAAQS).

To avoid the incremental risk of exposure to carcinogenic toxins from producing wells, no well will be located closer than 0.25 mile from a dwelling or residence. At 0.25 mile, the incremental risk increase for the most likely exposure scenario is below the designated threshold level of less than 1 additional person per million.

To avoid incremental risk of exposure to carcinogenic toxins from compressor facilities, any compressor facility located closer than 4 miles to a dwelling or residence will require additional NEPA analysis prior to the final selection of the site and authorization to construct.

Cultural/Paleontological Resources

If effects to paleontological values, or objects of historic or scientific interest are observed, the operator will be required to immediately contact the BLM and the operator will be required to cease any operations that would result in the destruction of or adverse impact to these values.

In areas of paleontological sensitivity, the BLM will make a determination as to whether a survey by a qualified paleontologist is necessary prior to the disturbance. In some cases, construction monitoring, project relocation, data recovery, or other mitigation will be required to ensure that significant paleontological resources are avoided or recovered during construction.

If paleontological resources are uncovered during surface-disturbing activities, operators will suspend operations at the site that would further disturb such materials and immediately contact the BLM AO, who will arrange for a determination of significance, and, if necessary, recommend a recovery or avoidance plan. Mitigation of impacts to paleontological resources will be conducted on a case-by-case basis, and operators will either avoid or protect paleontological resources.

Areas underlain by either the Wasatch or Green River formations have a high potential for containing vertebrate paleontological resources (fossils) and must be surveyed by a qualified paleontologist before surface disturbing activities will be authorized. Based on the results of the paleontological survey, additional monitoring and/or mitigation will be necessary. All major pipelines (12” and larger) will have paleontological open trench inspections and geologic research to resolve mapping issues discovered during the paleontological overview in the Jonah Field. Other actions, such as onsite project monitors by professional paleontologists while surface disturbing activities are occurring, and/or spot-checks of spoil piles, pits, and trenches prior to backfilling will become more common and will be considered standard stipulations within the Blue Rim-Ross Butte Management Area.

Operators will follow the Section 106 compliance process prior to any surface-disturbing activity and will either avoid or protect cultural resource properties as determined through consultation with the Wyoming State Historic Preservation Office (SHPO).

Operators will halt construction activities at the site of previously undetected cultural resources discovered during construction. The BLM will be notified immediately, and consultation with SHPO and, if necessary, the Advisory Council, will be initiated to determine proper mitigation measures pursuant to 36 Code of Federal Regulations (CFR) 800.11 or other treatment plans,

programmatic agreements, or discovery plans that may direct such efforts. Construction will not resume until a Notice to Proceed is issued by the BLM.

In culturally sensitive soils, if cultural resources are located within frozen soils or sediments precluding the ability to adequately record or evaluate the find, construction work will cease and the site will be protected for the duration of frozen soil conditions. Following natural thaw, recordation, evaluation and recommendations concerning further management will be made to the BLM AO, who will consult with affected parties. Construction work will be suspended until management of the threatened site has been finalized.

Should future work identify any traditional Native American religious or sacred sites, consultation among the BLM, the affected Native American group, the Wyoming SHPO and the project proponent will occur to resolve conflicts. This consultation will occur on a case-by-case basis or in conformance with an approved Native American Concerns Agreement Document.

Operators should inform their employees, contractors, and subcontractors about relevant federal regulations intended to protect archaeological and cultural resources. All personnel should be informed that collecting artifacts (including arrowheads) is a violation of federal law and that employees engaged in this activity may be subject to disciplinary action, which could include dismissal.

Equipment operators should be informed that a cultural resource could be found anywhere; and if they uncover a site during construction, surface disturbing activities at the site must be halted immediately and the BLM notified.

Historic trails will be avoided. Surface disturbing activities will avoid areas within one-quarter mile of a trail unless such disturbance will not be visible from the trail or will occur in an existing visual intrusion area. Historic trails will not be used as haul roads. Placement of facilities outside one-quarter mile that are within view of the Lander Trail will be located to blend the site and facilities in with the background.

The selective use of locked gates, where practicable, could be used to protect any significant cultural sites found during inventories. This approach is more commonly used as a seasonal restriction to protect wildlife during winter months, but some applications may also present themselves from a cultural resources standpoint.

Fire and Forestry

Coniferous timber stands should contain a 40-percent or greater post-harvest canopy cover with patch sizes between 26 and 60 acres to meet seasonal elk habitat requirements where feasible and compatible with other timber management goals (USDA 1981).

The leaving of dead and dying trees, trees with heart rot, and other standing unmerchantable timber may be required to meet the ecological needs of numerous wildlife species, including woodpeckers, owls, and many neotropical migrants, in all timber management activities.

Prescribed burning will be conducted when soil moisture is adequate for the regrowth of plants in arid regions, provided this requirement is compatible with other prescription burn needs (USDA 2004).

Roads and Transportation

Roads created for commercial timber harvesting will be closed and rehabilitated as soon as possible after the end of timber harvesting. Areas could be subject to travel exclusions, closures, and/or other travel restrictions during sensitive periods.

The project proponent could be required to develop a coordinated travel management plan before surface disturbing activities are authorized.
Transportation plans will be required to maintain the largest undisturbed blocks of habitat possible and to minimize the acres of disturbance from roads, pipelines, power lines, and other facilities within and/or associated with the proposed project area.

Closure and reclamation of unnecessary roads will be required to reduce fragmentation and restore habitat integrity while reducing the potential for wildlife disturbances.

All new roads will be constructed to meet the design requirements of the BLM Manual 9113. New main artery roads will be designed to reduce sediment, salt, and phosphate loading to the Green and New Fork Rivers. Where necessary, running surfaces of the roads will be graveled if the base does not already contain sufficient aggregate.

If necessary, roads will be treated to suppress dust. Treatment could include gravel, mag-water, or in rare cases, paving of roads.

The use of existing two-track and unconstructed roads will be encouraged where such roads would withstand the proposed access activity, would provide a safe route for ingress and egress, would not result in offsite sediment discharge, could be effectively reclaimed, and would result in minimal, if any, new surface disturbance.

The operator will regularly maintain all lease roads in a safe, usable condition. A regular maintenance program will include, but not be limited to, blading, ditching, culvert installation, drainage installation, surfacing, and cattleguards, as needed. Design, construction, and maintenance of the road will be in compliance with the standards contained in BLM Manual, Section 9113 (Roads), and in the latest version of the "Gold Book," *Oil and Gas Surface Operating Standards for Oil and Gas Exploration and Development.*

At the discretion of the BLM AO, road construction may be required to be monitored by a qualified individual agreed to by the BLM AO and the operator. A certified civil engineer is to submit a statement that the road was built as designed within 15 days after the road has been constructed. Compaction of the subgrade with water and heavy equipment to a density higher than the surrounding subsurface is required during construction.

Project-related travel will be limited to only that necessary for efficient project operation during periods when soils are saturated and excessive rutting could occur.

Where deemed necessary and effective by the BLM AO, locked gates will be installed on oil field roads (with structures added to prevent drive-arounds) to reduce traffic and protect other resources (e.g., wildlife, cultural resources) from impacts caused by increased vehicle traffic and human presence. The need and location of locked gates will be determined during the transportation planning process. To control or reduce sediment from roads, guidance involving proper road placement and buffer strips to stream channels, graveling, proper drainage, seasonal closure, and in some cases, redesign or closure of old roads will be developed when necessary. Construction may also be prohibited during periods when soil material is saturated, frozen, or when watershed damage is likely to occur.

Available topsoil will be stripped from all road corridors prior to commencement of construction activities and will be redistributed and reseeded on backslope areas of the borrow ditch after completion of road construction activities. Borrow ditches will be reseeded in the first appropriate season after initial disturbance.
On newly constructed roads and permanent roads, the placement of topsoil, seeding, and stabilization will be required on all cut and fill slopes unless conditions prohibit this (e.g., rock). No unnecessary side-casting of material (e.g., maintenance) on steep slopes will be allowed. Snow removal plans may be required so that snow removal does not adversely affect reclamation efforts or resources adjacent to the road.

Reclamation of abandoned roads will include requirements for reshaping, recontouring, resurfacing with topsoil, installation of water bars, and seeding on the contour. Road beds, well pads, and other compacted areas will be ripped to a 2-foot depth on 1.5-foot centers to reduce compaction prior to spreading the topsoil across the disturbed area. Stripped vegetation will be spread over the disturbance for nutrient recycling, where practical. Fertilization or fencing of these disturbances will not normally be required. Additional erosion control measures (e.g., fiber matting) and road barriers to discourage travel may be required. As deemed necessary by the BLM AO, graveled roads, well pads, and other sites will be stripped of usable gravel and hauled to new construction sites prior to ripping. The removal of structures such as bridges, culverts, cattleguards, and signs usually will be required.

Road closures may be implemented during crucial periods (e.g., wildlife winter periods, spring runoff, calving and fawning seasons, saturated soil conditions).

Individual road design plans for new and/or improved roads will be submitted for approval as components of APDs or ROW permits. Plans must be approved prior to initiation of work. Operators will schedule a review of plans with sufficient time to obtain BLM approval prior to commencement of work.

Existing roads will be used to the maximum extent possible and upgraded as necessary.

Operators will comply with existing federal, state, and county requirements and restrictions to protect road networks and the traveling public.

Roads and pipelines will be located adjacent to existing linear facilities wherever practical.

As deemed necessary by the BLM AO, operators and/or their contractors will post appropriate warning signs and require project vehicles to adhere to appropriate speed limits on project-required roads.

The application of produced water on roads for use in dust suppression activities on BLM-administered public lands will not be allowed unless total dissolved solids (TDS) are less than 400 mg/l (state standard for the Colorado River drainage), the water does not contain hazardous material, and prior approval is obtained from BLM and WDEQ.

Appropriate dust suppressants will be applied to oil and gas field and other roads as necessary. Depending on the site and amount of traffic, suppressants could include water or mag water. In some cases, paving of roads could be required to control dust, provide all-weather access, and reduce road maintenance.

Pipelines

Channel crossings by pipelines will be constructed so that the pipe is buried at a depth sufficient to ensure the pipeline does not become exposed.

Channel crossings by roads and pipelines will be constructed perpendicular to flow. Streams/channels crossed by roads will have culverts installed at all appropriate locations as specified in the BLM Manual 9112-Bridges and Major Culverts (USDI, BLM 1990) and Manual 9113-Roads (USDI, BLM 1985). All stream crossing structures will be designed to carry the 25-year discharge event or other capacities as directed by the BLM.

Wetland areas will be crossed during dry conditions (i.e., late summer, fall, or dry winters); winter construction activities will occur only prior to soil freezing or after soils have thawed.

On ditches exceeding 24 inches in width, 6 to 12 inches of surface soil will be salvaged where possible on the entire right-of-way. When pipelines and communication lines are buried, at least 30 inches of backfill will be on top of the pipe. Backfill should not extend above the original ground level after the fill has settled. Guides for construction and water bar placement are found in "Surface Operating Standards for Oil and Gas Exploration and Development" (USDA 1978). Bladed surface materials will be re-spread on the cleared route once construction is completed. Disturbed areas that have been reclaimed may need to be fenced when the route is near livestock watering areas.

Pipeline ROWs will be located to minimize soil disturbance. Mitigation will include locating pipeline ROWs adjacent to access roads to minimize ROW disturbance widths, or routing pipeline ROWs directly to minimize disturbance lengths. In some cases, it may be appropriate to place pipelines directly on the surface.

Existing crowned and ditched roads will be used for access where possible to minimize surface disturbances. Clearing of pipeline and communication line rights-of-way will be accomplished with the least degree of disturbance to topsoil. Where topsoil removal is necessary, it will be stockpiled (windrowed) and re-spread over the disturbance after construction and backfilling are completed. Vegetation removed from the right-of-way will also be re-spread to provide protection, nutrient recycling, and a seed source.

Temporary disturbances that do not require major excavation (e.g., small pipelines and communication lines) may be stripped of vegetation to ground level using mechanical treatment, leaving topsoil intact and root mass relatively undisturbed.

Trees, shrubs, and ground cover (not to be cleared from rights-of-way) will require protection from construction damage. Backfilling to preconstruction condition (in a similar sequence and density) will be required. The restoration of normal surface drainage also will be required.

To promote soil stability, the compaction of backfill over the trench will be required (not to extend above the original ground level after the fill has settled). Wheel or other method of compacting the pipeline trench backfill will be required at two levels to reduce trench settling and water channeling; once after 3 feet of fill has been replaced and once within 6 to 12 inches of the surface. Water bars, mulching, and terracing will be required, as needed, to minimize erosion. In-stream protection structures (e.g., drop structures) may be required in drainages crossed by a pipeline to prevent erosion. The fencing of linear disturbances near livestock watering areas may be required.

During saturated soil conditions vehicular activity will be confined to roads designed and constructed for all-weather access (e.g., paved, graveled, and "mag-water" surfaced roads).

Crossings of ephemeral, intermittent, and perennial streams associated with road and utility line construction will generally be restricted until after spring runoff, when normal flows are established.

Pipeline projects should be conducted to allow natural movement of livestock through the field. Gaps should be provided in the trenching process to allow cows to move, or get pipeline projects completed while cattle are not on the allotment.

Livestock Grazing

Livestock grazing management will be conducted to meet the Standards for Healthy Rangelands.

Improvements for livestock grazing management will be constructed and managed to meet the Standards for Healthy Rangelands.

Springs and seeps used for livestock water sources will be fenced to protect these water sources and to maintain unrestricted flow rates.

Livestock grazing Best Management Practices (BMP) will be implemented to maintain or restore habitat conditions for various fish and wildlife species.

Rangeland and vegetation monitoring will be conducted to detect changes in grazing use, trend, and range conditions. These data will be used to support and direct grazing management decisions consistent with national policy. These efforts will help ensure that livestock grazing meets objectives for rangeland health and resolves conflicts with wildlife habitats or may provide a benefit to wildlife habitats.

Existing fences will be reconstructed or modified to meet BLM "wildlife friendly" standards to reduce or offset impacts to wildlife where determined necessary.

All water development activities for livestock grazing use that exceed the minimum depletion level established by USFWS must comply with all USFWS fees and prescribed mitigations to offset water depletion in the Colorado River.

Surface disturbing activities will be coordinated with livestock grazing permittees to minimize the effects of the surface disturbance on other approved operations. To the maximum extent practicable, this effort will include consulting on scheduling of operations to mutually minimize effects.

Any damage to the function of range improvements (e.g., fence damage, cattle guard cleaning, livestock loss) from other approved operations will be repaired immediately or remedied by the operator causing the damage.

All range improvements (stock water tanks, pipelines, corrals, etc.) will be avoided by 500 feet unless no other alternative is available and impacts can be mitigated as per the BLM AO.

When industrial use dominates an allotment to the point of making it unsuitable for livestock grazing, BLM will consider granting special non-use so that livestock could be removed without penalty for a specified amount of time.

Where development is intense, operators will hold semi-annual or annual operator meetings with grazing permittees. Operators will identify an employee to coordinate with grazing permittees on these issues.

Compensation will be provided by operators for cattle lost to oil and gas activities (includes deaths from pits and animals struck on roads). This will be addressed in the same manner as a road maintenance agreement, with operators making payment based on their level of activity, not on the proximity to the dead animal.

Oil and gas or other operations will be conducted so as to retain access to cattle movement corridors (trails) so that livestock can be managed.
Pipeline projects will be conducted to allow natural movement of livestock through the field. Gaps will be provided in the trenching process to allow cows to move or get pipeline projects completed while cattle are not on the allotment.

Well pads, pits, and other facilities that could be hazardous to livestock will be fenced to keep livestock out and the fences maintained in functioning condition.

Operators will mitigate all energy development related impacts to agricultural operations, in order to maintain the viability of working landscapes.

Grazing management decisions will be based on monitoring data, both short-term and long-term, which will be jointly developed by grazing permittees and the appropriate federal land management agency. Protocols for monitoring will be consistent with the Memorandum of Understanding in place between the National Public Lands Council and the BLM.

A menu of incentive based mitigation and conservation measures will be developed that will encourage local, private land owners to participate.

A program will be developed for local landowners to participate in conservation efforts including a local initiative to develop and implement Contracts for Environmental Services as a means to preserve Sublette County's working landscapes, working ranches, and open space values.

Acceptable levels of grazing will be maintained to benefit both sage grouse and agricultural operations.

Effective communication and cooperation with grazing permittees will be maintained.

Meet with permittees, at minimum twice annually, before turnout to schedule maintenance activities and after the grazing season to discuss monitoring.

A mitigation plan will be developed with state and local representatives to maintain existing ranch lands.

Loss of ranches due to impacts from energy development will be monitored.

A fund will be established to develop range improvement projects away from individual oil and gas developments.

All pads will be completely fenced and existing range improvements will be monitored and maintained. All new fences will adhere to standards provided by BLM Handbook H-1742-1. Fences will be maintained.

Minerals

Drilling of multiple well bores from a single well pad will be required, unless it were shown to be infeasible.

Well locations and associated disturbances that are dry holes or abandoned producers will be reclaimed as soon as practicable.

Reserve pits, evaporation ponds, or other oil and gas related pits shall be designed and operated in a manner that deters or prevents access to birds, waterfowl, livestock and wildlife. Pit netting is an example of a measure to accomplish this requirement.

Project Siting and Operation

In conformance with Onshore Oil and Gas Order No. 1, operators will prepare and submit individual comprehensive drill site design plans for BLM approval. These plans will show the drill location layout over the existing topography, dimension of the location, volumes and cross-sections of cut and fill, location and dimensions of reserve pits, existing drainage patterns, and access road egress and ingress. Plans will be submitted and approved prior to initiation of construction.

The operator will submit to the BLM AO within 30 days of pad construction a digital as-built file of the following: the perimeter of the pad measured at the base of fill slopes and at the head of cut slopes, including all associated soil pile locations and the centerline of the access road. The operator will also submit to the BLM AO within 30 days of drilling, a digital file of the surface location of the well head(s). The digital depiction will be in one of the following file formats: shapefile format (*.shp), geodatabase (*.gdb), or AutoCADD (*.dwg), and should come with defined projections in NAD83 UTM Zone 12 N.

Operators will contact the BLM AO's field representative no earlier than 15 days and no later than 3 working days prior to commencement of construction activities. Construction under adverse conditions may require additional mitigation measures.

Prior to the onset of drilling, a "stock tight" fence will be installed on three sides of the reserve pit. This fence will be woven wire at least 28 inches high and within 4 inches of ground surface, with two strands of barbed wire above the woven wire with 10-inch spacing. The fence corners will be double H-brace panels constructed with treated wood corner posts or steel pipe posts of at least 4-inch outside diameter (see Gold Book, pgs 16-18). The corner brace posts will be securely set at a minimum of 30 inches in the ground. Metal T-posts are not allowed for corner panel construction, but they may be used between corner panels. The fourth side of the reserve pit will be fenced after the drilling rig moves off the location. The fence will be located a maximum of 5 feet from the edge of the reserve pit. The double H-braces will be used on all corners of the pit area. The operator will implement measures to prevent wildlife and livestock from entering the reserve area during drilling and well completion operations before the fourth side of the fence has been constructed.

All reserve pits must be lined. Reserve pit liners must have a mullen burst strength that is equal to or exceeds 300 pounds, a puncture strength that is equal to or exceeds 160 pounds, and grab tensile strengths that are equal to or exceed 150 pounds. Verified test results will be conducted according to ASTM test standards. The liner must be totally resistant to deterioration by hydrocarbons.

Liners must be installed over smooth fill subgrade that is free of pockets, loose rocks, or other materials that could damage the liner. Sand, sifted dirt, or bentonite are suggested.

Reserve pit side slopes will not exceed a 1:1 ratio. End slopes will not exceed a 3:1 ratio.

Oil-based muds used for drilling operations should be environmentally acceptable.

All oil-based mud drilling operations will be completed through a closed mud system, and all oil-based mud will be contained in the closed system.

The closed drilling system will be equipped with appropriate drip pans, liners, and catchments under probable leak sources as needed to prevent the oil-based drilling mud and cuttings from reaching the reserve pit and/or ground surface of the drill pad.
Any cuttings dropped or mud spilled will be cleaned up immediately and placed in the approved containment device. All spills exceeding one barrel outside the containment devices will be reported to the BLM within 8 hours.

All BPO equipment, as well as all elastomers in the mud system, will be suitable for oil-based mud.

Well control training of the rig crews will include coverage of the additional hazards associated with oil-based mud.

The operator will exercise extreme caution to avoid discharging oil-based drilling mud into the reserve pit. Should an event occur in which it is necessary for oil-based mud to be discharged to the reserve pit, the operator will immediately initiate the following actions:

The reserve pit will be secured to prevent birds and other wildlife from getting into the oil-contaminated cuttings, fluids, and mud.

The operator will submit a plan to the BLM-PFO describing how the contaminated pit will be managed (i.e., will the contaminated material/fluids be treated in place, and if so by what method; or will the contaminants be removed to a WDEQ-approved disposal facility).

Operators will submit a Sundry Notice describing how the oil contaminated drill cuttings will be treated to assure the oil stays contained in the cuttings and where the cuttings ultimately will be stored (i.e., buried in the flare pit, buried in a separate “on-location” pit, or removed to a WDEQ-approved disposal site. Any on location disposal sites for the oil contaminated drill will be lined with a 12-mil or stronger impervious liner compatible with oils. A liner meeting this specification also will be placed under any temporary storage area for the oil contaminated cuttings.

Oil-based mud drilling system shall not be used for drilling through formations containing fresh water aquifers. Prior to drilling surface casing with a rig that has been using oil-based mud, the pumps, pump lines and tanks will be cleaned to ensure that **NO** oil-based mud is in the system during surface drilling operations of the new well.

Surface casing shall be set to a depth below all potential sources of usable or potable drinking water. All surface casing shall be cemented from total depth back to surface. In the event surface casing cannot be set to this depth, the subsequent casing string shall be cemented from its total depth to at least 100 feet above the surface casing shoe. In the event surface casing cementing does not reach the surface, that casing shall be remedially cemented by squeeze or top cementing as approved by the BLM FO.

If drilling fluids are transferred from one well to the next well in the drilling plan, then the fluids will be tested immediately before transfer or at the time following last pit usage based on WDEQ Guideline 8 parameters. This water analysis standard is incorporated in a packet submitted by Western Environmental Services and Testing, Inc., as part of its water analysis packages. Any other company conducting water testing also will need to test for the elements listed in the WDEQ Guideline 8 parameters.

To ensure the timely review of the water quality data, the operator is required to have a WDEQ approved firm contracted to conduct water samples and to send a copy of water quality test results to the BLM PFO at the same time that they are sent to the operator.

Operators will construct reserve pits with 2 feet of freeboard in cut areas or in compacted and stabilized fill. Reserve pits will not be located in areas in which groundwater is less than 50 feet from the surface. A closed system will be required if water shows in the conductor hole.
Produced water from oil and gas operations will be disposed of in accordance with the requirements of Onshore Oil and Gas Order #7.

Any drilling fluids pit that shows indications of containing hazardous wastes will be tested for the Toxicity Characteristic Leaching Procedure constituents. If analysis proves positive, the fluids will be disposed of in an approved manner. The cost of the testing and disposal will be borne by the potentially responsible party.

Wells, pipelines, and ancillary facilities will be designed and constructed such that they will not be damaged by moderate earthquakes. Any facilities defined as critical according to the Uniform Building Code will be constructed in accordance with applicable Uniform Building Code Standards for Seismic Risk Zone 2B.

Before conducting any reserve pit evaporation, by means other than natural evaporation, the operator will submit a Sundry Notice for Authorized Officer approval. The Sundry Notice will provide a detailed description of the drying method. The operator is required to obtain authorization from the WOGCC for pit fluid treatment by means other than natural evaporation.

Sewage disposal facilities will be in accordance with state and local regulations.

Trash will be contained in a portable trash cage. The trash cage will be emptied in a WDEQ approved sanitary landfill.

Slope, grade, and other construction control stakes (e.g., exterior boundary centerline) will be placed, as necessary, to ensure construction in accordance with the surface use plan. The cut and fill slopes and spoil storage areas will be marked with a stake and/or lath at a minimum of 50-foot intervals. The tops of the stakes or laths will be painted or flagged in a distinctive color. All boundary stakes and/or laths will be maintained in place until final construction cleanup is completed. If stakes are disturbed, they will be replaced before proceeding with construction.

Drilling, well completion, and workover lights will be shrouded and directed on to the drilling platform and/or well pad, to the extent allowed by safety requirements, so that lights/glare are not directed away from the well pad.

Production Facilities

All storage tank batteries, including drain sumps and sludge holdings at compressor facilities, installed on location and designed to contain any oil, glycol, produced water, or other fluid that may constitute a hazard to public health or safety, will be surrounded by a secondary means of containment for the entire contents of the largest single tank in use plus 1 foot of freeboard for precipitation or 110 percent of the capacity of the largest vessel. The appropriate containment and/or diversionary structures or equipment, including walls and floor, to prevent discharged fluid from reaching ground, surface, or navigable waters, will be impervious to any oil, glycol, produced water, or other fluid for 72 hours and will be constructed so that any discharge from a primary containment system (e.g., tank or pipe) will not drain, infiltrate, or otherwise escape to ground, surface, or navigable waters before cleanup is completed.

Treaters, dehydrators, and other production facilities installed on location that have the potential to leak or spill oil, glycol, produced water, or other fluid that may constitute a hazard to public health or safety, will be placed on or within an appropriate containment and/or diversionary structure to prevent spilled or leaking fluid from reaching ground, surface, or navigable waters. The appropriate containment and/or diversionary structure will be sufficiently impervious to oil, glycol, produced water, or other fluid and will be installed so that any spill or leakage will not drain, infiltrate, or otherwise escape to ground, surface, or navigable waters before cleanup is completed.

All aboveground permanent structures (permanent means onsite for longer than 90 days) not subject to safety requirements will be painted by the operator to blend with the natural color of the landscape. New production facilities will be painted a noncontrasting color that is harmonious with the surrounding landscape as specified and approved by the BLM on a case-specific basis.

Stream sediment, phosphate, and salinity load will be reduced where possible. In areas in which groundwater exists 50 feet or less from the surface (WOGCC), produced water from oil and gas operations will be disposed of in an approved closed storage system or by other acceptable means complying with Onshore Order #7.

Where the depth to groundwater is less than 100 feet and soil permeability is more than 0.1 foot/day, plants, mills, or associated tailings ponds and sewage lagoons will not be allowed.

Proper containment of oil and produced water in tanks, drilling fluids in reserve pits, and locating staging areas for storage of equipment away from drainages will prevent potential contaminants from entering surface waters.

All new production facilities construction that has open-vent exhaust stacks will be equipped to prevent bird and bat entry or perching on the stack.

A sundry notice must be submitted and approved prior to any pit closures or reclamation work.

In the event that any hydrocarbon material is released into the reserve or production pits, it will be removed within 24 hours of the discharge event. Any pits that have or ever have had hydrocarbons shall be netted or otherwise secured to prevent birds or wildlife from entering them.

All secondary containment structures will be designed to prevent bird, animal, or livestock entry.

If directional drilling is not possible, facilities will be co-located on a centralized pad as much as possible to decrease truck trips and human disturbance during wildlife sensitive time periods.

Recreation

Operators will restrict off-road vehicle (OHV) activity by employees and contract workers to the immediate area of authorized activity or existing roads and trails.

Socioeconomics

Mitigate negative effects from growth; it will be necessary to calculate net costs and/or benefits. The BLM/operators will use the population projections developed in Chapter 4, and estimate effects to the counties based on current service and housing levels identified in Chapter 3. Where net effects are negative, the BLM/operators shall identify potential solutions to avoid such effects, or to reduce the impact.

Socioeconomic monitoring will follow the Pinedale Socioeconomic Monitoring Plan (6-24-08) developed by Dr. Robert Winthrop. Monitoring reports will be submitted to the BLM and cooperating agencies annually.

Soils

Soil retention measures, such as silt fencing, contour furrows, or hydromulching, shall be implemented on erosive soils at the time of disturbance.

Revegetation shall be initiated on exposed soils on portions of the disturbance no longer needed for operations (e.g., cut and fill slopes, portions of well pads not needed for production operations) within one growing season of the time the disturbance is no longer needed for operations. Interim reclamation (i.e., site stabilization/soil retention seeding) shall be conducted on disturbed areas that are needed for future planned operations but will not be occupied for one or more growing seasons.

Upland soils classified as highly erodible in the order three soil survey will be avoided.

Slopes greater than 10 percent and with south-facing aspects with sensitive or highly erosive soils and areas with biological crusts will be avoided.

Before a surface disturbing activity is authorized, topsoil depth will be determined. The amount of topsoil to be removed, along with topsoil placement areas, will be specified in the authorization. The uniform distribution of topsoil over the area to be reclaimed will be required, unless conditions warrant a varying depth. On large surface-disturbing projects (e.g., gas processing plants) topsoil will be stockpiled and seeded to reduce erosion. Where feasible, topsoil stockpiles will be designed to maximize surface area to reduce impacts to soil microorganisms. Stockpiles remaining less than 2 years are best for soil microorganism survival and native seed viability.

Emphasis will be placed on the reduction of soil erosion and sediment into the Green River Basin watershed. Of particular importance will be those areas with saline soils or those areas with highly erodible soils. Critical erosion condition areas will continue to be identified during soil

surveys, monitoring, site specific project analysis, and activity plan development for the purpose of avoidance and special management.

Operators will avoid adverse impacts to soils by—

Minimizing disturbance, avoiding construction with frozen soil material
Avoiding areas with high erosion potential (e.g., unstable soil, dunal areas, slopes greater than 25 percent, floodplains), where possible
Salvaging and selectively handling topsoil from disturbed areas
Adequately protecting stockpiled topsoil and replacing it on the surface during reclamation
Leaving the soil intact (scalping only) during pipeline construction, where possible
Using appropriate erosion and sedimentation control techniques, including, but not limited to, diversion terraces, riprap, and matting
Promptly revegetating disturbed areas using adapted species
Applying temporary erosion control measures (e.g., temporary vegetation cover)
Applying biodegradable mulch, netting, or soil stabilizers
Constructing barriers as appropriate in certain areas to minimize wind and water erosion and sedimentation prior to vegetation establishment.

Management of the soil resource will continue to be based on the following: 1) evaluation and interpretation of soils in relation to project design and development; 2) identification and inventory of soils for baseline data; and 3) identification and implementation of methods to reduce accelerated erosion.
Evaluation and interpretation involves identifying soil properties that influence their use and recommendations for development while minimizing soil loss. Projects will be examined on a site-specific basis, evaluating the potential for soil loss, and the compatibility of soil properties with project design. Stipulations and mitigating measures are provided on a case-by-case basis to ensure soil conservation and practical management. Projects requiring soil interpretations include construction of linear right-of-way facilities (i.e., pipelines, roads, railroads, and power transmission lines); construction of water impoundments; rangeland manipulation through fire or mechanical treatments; construction of plant site facilities, pump stations, well pads and associated disturbances; and reclamation projects.

BLM will require each individual right-of-way, APD, or other application to include a reclamation plan approved by the BLM. Each Master Development Plan for projects that cumulatively disturb more than 10 acres will be required to submit an Erosion, Revegetation and Restoration Plan (ERRP) consistent with BLM guidance. Prior to new disturbance, ERRPs will be approved by the BLM Authorized Officer.

Notice of any spill or leakage, as defined in BLM NTL 3A, will be immediately reported by the operator to the AO and other such federal and state officials (e.g., WDEQ) as required by law. Verbal notice will be given as soon as possible, but within 24 hours, and verbal notices will be confirmed in writing within 72 hours of any such occurrence. Any accidental soil contamination by spills of petroleum products or other hazardous materials will be cleaned up and the soil disposed of or rehabilitated according to WDEQ Solid Waste Guidelines (#2) for petroleum contaminated soils.

Visual Resource Management

Visual Resource Management (VRM) class objectives and design considerations should be considered early in the project planning process. Approval of well pad locations, new roads, buried pipelines, or other facilities will be conditioned upon the operator developing a visual resource protection plan, acceptable to BLM, for the mitigation of anticipated impacts. To minimize visual impacts, authorization of well pad locations, new roads, CPFs, buried pipelines, etc. will require the operator to demonstrate to the AO's satisfaction that the location and/or facilities have reasonably incorporated visual design considerations that mitigate unnecessary visual impacts.

Within VRM Class II and III areas, during onsite reviews, the BLM and the operator will evaluate potential disturbances and impacts to visual resources using the VRM Contrasting Rating Process and forms as required and described in Handbook H-8431-1. Identify appropriate mitigation and reevaluate until it is demonstrated that VRM management class objectives are met. Three-dimensional design and visual analysis software could be used to analyze impacts, develop mitigation plans, and prepare visual simulations. Digital terrain information could cover the project area viewshed with engineered site plans being entered into the Geographic Information System (GIS) 3D model allowing for comprehensive analysis and determining cumulative impacts. Mitigation techniques will include, but not be limited to new roads that are designed so that they conform with the landscape, incorporating curves to eliminate distant, straight line impacts; every opportunity will be taken to reclaim existing road ROWs that are not used when new roads are designed over them; revegetation will be initiated as soon as possible after disturbance; pipeline ROWs will be located within existing ROWs whenever possible; and aboveground facilities not requiring safety coloration will be painted with appropriate BLM-specified nonreflective standard environmental colors (i.e., Carlsbad Canyon, Shale Green or Desert Brown, or other specified standard environmental color). Topographic screening, vegetation manipulation, project scheduling, and traffic control procedures will all be employed as deemed appropriate by the BLM to further reduce visual impacts.

Low profile tanks will be required wherever visual sensitivity is an issue and/or wherever deemed appropriate mitigation to help maintain the visual integrity and basic characteristics of the landscape.
Within VRM Class IV areas, the BLM and operators will implement BMPs including, but not limited to the following: utilize existing topography to screen roads, pipeline corridors, drill rigs, wells, and production facilities from view, where practical. Operators will paint all aboveground production facilities with appropriate colors (Carlsbad Canyon, Shale Green or Desert Brown, or other specified standard environmental color) specified by the BLM to blend with adjacent terrain, except for structures that require safety coloration in accordance with OSHA requirements.

Avoid the introduction of new, linear visual intrusions on the landscape. New roads and pipeline corridors, to the extent practicable, will follow contours and use topography as screening. New pipelines will be combined with existing or proposed roads and, wherever possible, new cross-county pipeline corridors will be avoided.

If BLM allows a well pad to be developed in any area managed for visual resources, roads and well pads may need to be surfaced with materials that reduce visual contrast. For example, in the VRM Class II area near Pinedale, the subsoil material (Wasatch Formation) can be very light in color and thus contrasts with surrounding undisturbed areas. Mixing topsoil with gravel (1-inch deep) in highly visible areas will help to reduce contrast. Operators will be required to investigate the feasibility of applying this opportunity of surfacing roads and well pads with materials closer in color and texture to the surrounding landscape.

Watershed and Water

Approved surface disturbing management actions in stream corridors (within the "high bank" of any ephemeral or intermittent stream course, or within the high bank +50 feet of any perennial stream) shall be designed and implemented to protect fish spawning, fry, and other important fish life stages and habitats within the stream or connected streams and to maintain fish passage.

All disturbance occurring within the high bank +50 feet shall be reclaimed to meet the PFC standards.

Crossings of perennial streams will be located within existing "linear disturbance corridors" where possible. Should such a corridor not exist on a particular stream or with a reasonable distance of the proposed crossing, the crossing shall be located at a point to minimize disturbance to the stream channel and associated riparian habitat and maintain an adequate amount of unrestricted water flow to maintain fish passage during and after construction.

Horizontal directional drilling shall be used for all pipeline crossings of perennial streams and their associated riparian habitats, unless the operator/permittee/right-of-way holder can demonstrate to the AO's satisfaction that this procedure is not economically or technically feasible for a given crossing.

Upland erosion from surface disturbing activities must be controlled effectively and not allowed to be transported to stream systems.

Prudent use of erosion control measures, including diversion terraces, riprap, matting, temporary sediment traps, and water bars will be employed as necessary. These erosion control measures will be used as appropriate to control surface runoff generated at well locations. The type and location of sediment control structure, including construction methods, will be described in APD and ROW plans. If necessary, to reduce suspended sediment loads and remove potential contaminants, Operators may treat diverted water in detention ponds prior to release to meet applicable state or federal standards.

BMP project proponents/operators/permittees will be required to control sediment from all construction sites.
Operators will prepare Stormwater Pollution Prevention Plans (SWPPP) for their respective areas of field development as required by WDEQ National Pollution Discharge Elimination System (NPDES) permit requirements.

Any industrial water wells and any tanks, pumps, hoses, pipes, or other associated connections will include check valves, backflow preventers, or other devices that secure the well against discharge of fluids into the well.

All water used for the drilling of the surface casing must comply with all requirements concerning water quality as set forth by WOGCC Regulations.

All water used in association with this project will be permitted through the Wyoming State Engineer's Office.

All water wells must be constructed and operated according to all requirements of the Wyoming State Engineer's Office and shall be equipped with measures and equipment to prevent backflow and/or siphoning into the well.

Wetlands, Riparian Areas, and Floodplains

All surface disturbance, permanent facilities, etc., will remain a minimum of 500 feet away from the edge of surface waters, riparian areas, wetlands, and 100-year floodplains unless it is determined through site-specific analysis, approved in writing by the BLM AO, that no practicable alternative to the proposed action exists. If such a circumstance exists, then all practicable measures to mitigate possible harm to these areas must be employed. These mitigating measures will be determined on a case-by-case basis and may include, but are not limited to, diking, lining, screening, mulching, terracing, and diversions.

Floodplains by their very nature are unsafe locations for permanent structures. With an inundation of flood waters, soils disturbed by construction could experience a rate of erosion greater than undisturbed sites. Additional concern exists over the potential for floodwaters to aid in the dispersal of hazardous materials that may be stored within such structures. Therefore, floodplains will have no permanent structures constructed within their boundaries unless it can be demonstrated on a case-by-case basis that there is no physically practical alternative. In cases in which floodplain construction is approved, additional constraints could be applied.

Floodplain Executive Order 11988 (Section 2.a.(2)) states in summary that if the HEAD OF THE AGENCY finds that the only practicable alternative consistent with the law and the policy set forth in the Order requires siting in a floodplain, the agency will, prior to taking action, 1) design or modify its action in order to minimize potential harm...and 2) prepare and circulate a notice containing an explanation of why the action proposed is to be located in the floodplain.

Floodplain Executive Order 11988 (Section 3), in reference to federal real property and facilities, states that agencies will, if facilities are to be located in a floodplain (i.e., no practicable alternative), apply flood protection measures to new construction or rehabilitate existing structures, elevate structures rather than fill the land, provide flood height potential markings on facilities to be used by the public, and when the property is proposed for lease, easement, right of way, or disposal, the agency has to attach restriction on uses in the conveyance, etc., or withhold from such conveyance.

Any disturbances to wetlands and/or waters of the U.S. will be coordinated with the COE, and 404 permits will be secured as necessary prior to disturbance.
Operators will evaluate all project facility sites for occurrence of waters of the U.S. special aquatic sites, and wetlands, per COE requirements. All project activities will be located outside these sensitive areas, where practical.

Where disturbance of wetlands, riparian areas, streams, and ephemeral/intermittent stream channels cannot be avoided, COE Section 404 permits will be obtained by the operator as necessary.

Discharge of Produced, Treated, or Other Waters

Operators or pipeline contractors will comply with state and federal regulations for water discharged into an established drainage channel. The rate of discharge will not exceed the capacity of the channel to convey the increased flow without creating alterations to the channel that could create a trend towards failing Wyoming Rangeland Standards. Waters that do not meet applicable state or federal standards will be treated or disposed of at approved facilities. The disposal of all water (hydrostatic test water, stormwater, produced water) will be conducted in

conformance with WDEQ-Water Quality Division (WQD), BLM Onshore Oil and Gas Order No. 7, and WOGCC rules and regulations.

Channel Discharge Plans: Plans for any proposed discharge of produced water to channels on public lands will at a minimum contain provisions for the following:

The proposed discharged water will meet or exceed all state-approved standards for quality and be of equal or better quality than the proposed receiving waters at the point of confluence.

A survey and evaluation of the public land portion of the channel from the proposed point of discharge to the downstream extent of BLM-administered public lands that encompass the drainage or the confluence of the nearest perennial water with an upstream source of flow that will provide a dilution of at least 10:1 for produced water from all sources to the channel in question at the point of confluence.

The evaluation will address channel geometry and record current locations (by GPS, monumenting, photo points) and nature of key features such as vegetative communities, headcuts, depositional areas, existing wetlands, any other discharges, etc.

A certified laboratory report showing the components and quality of the water to be discharged will be provided to the BLM with sufficient time prior to initial discharge of produced water to allow for analysis. Subsequent reports will be provided to the BLM not more than 2 weeks past the date of the survey.

Channels on public lands receiving produced water discharges will be resurveyed annually at a minimum, or as requested by the AO, by the project proponent in the manner described above. The need to take corrective actions will be determined by the BLM.

Adequate design to minimize erosion at the point of discharge and to prevent channel drops (headcuts) from traveling up channel under augmented and natural flow conditions.

A method to control, in a timely manner, accelerated channel erosion. Corrective actions could include but are not limited to engineered structures, vegetation augmentation, or elimination of the discharge to the affected channel.

An acknowledgement that discharging to public lands, including discharge in an open channel, is a privilege that is revocable at any time by the AO.
The design of the discharge plan must be such that the *Wyoming Standards for Rangeland Health* are not violated.

Vegetation, land form, rocks, and/or large woody debris associated with the channel in question throughout the length of the channel as described previously shall be maintained in a condition sufficient to dissipate stream energy, filter sediment, aid groundwater recharge, aid in floodplain development, stabilize stream banks, and maintain channel characteristics.

Upland Discharge Plans: Plans for any proposed discharge of produced water onto uplands will, at a minimum, contain provisions for the following:

> An acknowledgement that the purpose of the discharge is for vegetation reclamation only
> Another avenue for the discharge of the water or the ability to immediately stop the flow
> Certification that the water meets or exceeds WDEQ standards

Information to support analysis that application of the water to the soil will not negatively affect soil quality, including infiltration or fertility

Information to support analysis that vegetative diversity and productivity and soil health and structure will not be negatively affected

No surface runoff from the reclamation site

An approved revegetation plan that includes a weed management plan

A monitoring plan and provisions for prompt action to address errors

A timeline to assure that irrigation efforts will be used for initial establishment of vegetation communities, not to maintain them.

Wildlife

General Wildlife

Well locations and associated road and pipeline routes will be selected and designed to avoid disturbances to areas of high wildlife value (e.g., raptor nest sites, wetland areas).

Avoid activities and facilities that create barriers to the seasonal movements of big game and livestock.

Reserve, workover, and production pits potentially hazardous to wildlife will be adequately protected (e.g., fencing, netting) to prohibit wildlife access as directed by the BLM in consultation with WGFD.

Wildlife-proof fencing will be used on reclaimed areas, in accordance with standards specified in *BLM Fencing Handbook* 1741-1, if it is determined that wildlife species are impeding successful vegetation establishment.

ROW fencing associated with this project will be kept to a minimum; if necessary, fences will consist of four-strand barbed wire meeting WGFD approval and *BLM Fencing Handbook* 1741-1 standards for facilitating wildlife movement.
For all breeding birds observed, additional surveys will be conducted immediately prior to construction activities to search for active nest sites.

To avoid potentially significant noise impacts, compressor engines will be located 2,500 feet or more from a dwelling or residence and from sage-grouse leks.

Activities in crucial habitats will be avoided when practicable.

Wildlife habitat mitigation will be carried out as quickly as possible or at the same time as the disturbance.

Locatable mineral development activities will not be allowed within identified big game parturition areas between May 1 and June 30 or within raptor nesting areas from February 1 to July 31.

Power lines will be buried or otherwise constructed or modified to reduce impacts to wildlife where possible.

Crucial wildlife winter ranges and nesting habitats could be treated with nitrogen fertilizers.

For additional wildlife mitigation measures, the Wyoming Game and Fish's document titled *Recommendations for Development of Oil and Gas Resources within Crucial and Important Wildlife Habitats* (WGFD 2004) may be consulted.

T&E and Special Status Species

If while conducting operations, substantial unanticipated environmental effects to listed, proposed, or candidate species are observed (whether effects are direct or indirect), formal consultation with U.S. Fish and Wildlife Service (USFWS) will be initiated immediately in addition to cessation of all such operations.

USFWS and WGFD consultation and coordination will be conducted for all mitigation activities relating to raptors and threatened and endangered (T&E) species and their habitats, and all permits required for movement, removal, and/or establishment of raptor nests will be pursued if they meet USFWS migratory bird office requirements.

Co-location of cell towers and other communication facilities will be encouraged to mitigate impacts within potential raptor habitat.

Areas containing open, streamside deciduous woodlands with low scrub vegetation, deciduous riparian woodlands, cottonwood stands or willow thickets must be surveyed for the Yellow-billed cuckoo. A minimum of three and a maximum of five censuses should be carried out from June 15 to August 10, with at least 12 days between successive census attempts.

Surveys for T&E and candidate wildlife species will be implemented in areas of potential habitat by a qualified biologist prior to disturbance. Findings will be reviewed by the BLM prior to or as components of ROW applications and APD review processes. If T&E and/or candidate species are found in the area, consultation with the USFWS will be initiated, and construction activities will be curtailed until there is concurrence between BLM and USFWS, on what activities can be authorized.

Proposed construction sites in the development area will be examined prior to surface-disturbing activities to confirm the presence or absence of prairie dog colonies. Confirmation will be made of white-tailed prairie dog colony/complex size, burrow density, and any other data to indicate whether the criteria for black-footed ferret habitat, established in the USFWS guidelines, are present. If prairie dog colony/complex meets the USFWS criteria, a qualified biologist will locate all project components to avoid direct, indirect and cumulative impacts to the colony/complex. If this is not practical or possible, black-footed ferret surveys of the prairie dog colony/complex, where required by the USFWS, will be conducted in accordance with USFWS guidelines and requirements. The results of the survey will be provided to the USFWS in accordance with Section 7 of the ESA, as amended, and Interagency Cooperation Regulations. If a black-footed ferret or its sign is found during the survey, the BLM AO will stop all action on the application in hand. New roads and trails should not cross colonies.

A survey for black-footed ferret is required prior to approval of construction activities within nonblock cleared habitats.

The USFWS has determined that any withdrawal of water from the Colorado River System (surface or groundwater) will jeopardize the endangered Colorado pikeminnow, humpback chub, bonytail, and razorback sucker. The USFWS Colorado River Endangered Fish Recovery Program requires a depletion fee be paid by the proponent to help support the recovery program. The fee is

required for each acre-foot of water depletion where the depletion of water is in excess of 100 acre-feet from the Colorado River system.

Operators will finance site-specific surveys for special status plant species (SSPS) prior to any surface disturbance in areas determined by the BLM to contain potential habitat for such species (Directive USDI-BLM 6840). These surveys will be completed by a qualified botanist as authorized by the BLM and this botanist will be subject to BLM's SSPS survey policy requirements. Data from these surveys will be provided to the BLM, and if any SSPS or habitats are found, BLM recommendations for avoidance or mitigation will be implemented.

Areas containing moist soils in mesic or wet meadows, subirrigated or seasonally flooded soils in valley bottoms, gravel bars, old oxbows, or floodplains bordering springs, lakes, rivers or perennial streams between 1,780 and 6,800 feet in elevation must be avoided for Ute ladies' tresses.

Migratory Birds

Bald eagles roost, perch, feed, and nest along the Green and New Fork Rivers. To ensure continued protection of this species, no surface disturbing or human activities will be authorized between November 1 and April 1 within 1 mile of known bald eagle winter use areas. All surface-disturbing or human activity, including construction of roads, pipelines, well pads, drilling, completion, or workover operations, will be seasonally restricted from February 1 through August 15 within 1.0 mile of all active eagle nests. An active eagle nest is one that has been occupied once in the past 5 years.

Permanent (life of the project) and high profile structures such as well locations, roads, buildings, storage tanks, overhead power lines, etc., and other structures requiring repeated human presence will not be constructed within 1,000 feet (1,400 feet for ferruginous hawks; 2,600 feet for bald eagles) of active raptor nests. Wells that must be located closer than 2,600 feet (but will not be allowed closer than 2,000 feet) of a bald eagle nest will be out of the direct line of sight of the nest; will have no human activity at the well site from February 1 through August 15 except in the case of an emergency; and will locate production facilities off-site or at a central production facility location at a distance of 2,600 feet or more from the nest. In these cases, the USFWS will be contacted to ensure compliance under the Migratory Bird Treaty Act and the Bald and Golden Eagle Protection Act.

All surface-disturbing activity (e.g., road, pipeline, well pad construction, drilling, completion, workover operations) will be seasonally restricted from February 1 through July 31 within a 0.5-mile radius of all active raptor nests, except that ferruginous hawk nests will be seasonally restricted from March 1 through July 31 and the seasonal buffer will be 1.0 mile. An active raptor nest is defined as a nest that has been occupied within the past 3 years. The seasonal buffer distance and exclusion dates applicable may vary depending on such factors as the activity status of the nest, species involved, prey availability, natural topographic barriers, line-of-site distance(s), and other conflicting issues such as cultural values, steep slopes, etc.

Raptor nest surveys will be conducted for active nests within a 0.5- to 1.0-mile radius of proposed surface use or activity areas if such activities are proposed to be conducted between February 1 and July 31 or as required in the Pinedale Field Office raptor survey protocol.

The buffer distance for raptors may vary depending on the species involved, prey availability, natural topographic barriers, line-of-sight distances, and other conflicting issues (e.g., cultural

values, steep slopes). Linear disturbances such as pipelines and seismic activity could be granted exceptions as long as they will not adversely affect the raptor(s).

Surface disturbing and human activities are not allowed between November 1 and April 1 within one mile of known bald eagle winter use areas.

Surface disturbing and human activities within one mile of an active bald eagle nest will be restricted from February 1 to August 15.

Activities or surface use are not allowed from March 15 to August 15 for the protection of migratory bird nests in accordance with the Migratory Bird Treaty Act. A nest survey must be conducted prior to construction from March 15 to August 15. If a nest is present and active, monitoring will need to be done until the young have fledged. Contact a BLM wildlife biologist prior to conducting nest surveys.

Habitat alterations within 2.5 miles of a bald eagle nest, or 0.5 miles from the stream bank of all streams within 2.5 miles of the nest, will be restricted to protect bald eagle foraging/concentration areas year-round.

Surface disturbing and disruptive activities will be prohibited within 0.5 miles of burrowing owl nesting habitat from April 1 through August 15.

For surface disturbing activities, surveys will be conducted within suitable plover habitat by a qualified biologist in accordance with USFWS 1999 guidelines. (A copy of the guidelines may be obtained from the USFWS, BLM, or WGFD). Two types of surveys may be conducted: 1) surveys to determine the presence/absence of breeding plovers (i.e., displaying males and foraging adults), or 2) surveys to determine nest density.

If surface disturbing activity is requested to take place in mountain plover habitat between April 10 and July 10, presence/absence surveys are required. Survey results will determine when activities are proposed.

Surveys to determine presence/absence of the plover will be conduct between April 10 through July 10 throughout the breeding range.

Visual observation of the area should be made within 0.25 mile of the proposed action to detect the presence of plovers.
A site must be surveyed for plover three times during the survey window, with each survey separated by at least 14 days.

Initiation of the project should occur as near to completion of the plover survey as possible (within 2 days for seismic exploration; a 14-day period may be appropriate for other projects.

If active plover nest is found in the survey area, the planned activity should be delayed 37 days, or one week post-hatching. If a brood of flightless chicks is observed, activities should be delayed at least 7 days.

Plover surveys will be conducted during early courtship and territorial establishment. Throughout the breeding range, this period extends from approximately mid-April through early July. However, the specific breeding period depends on latitude, elevation, and weather.

Plover surveys will be conducted between local sunrise and 10:00 a.m., and between 5:30 p.m. and sunset (periods of horizontal light to facilitate spotting the white breast of the adult plovers).

Drive transects within the project area to minimize early flushing. Flushing distances for mountain plovers may be within 3 meters (9 to 10 feet) for vehicles, but plovers often flush at 50 to 100 meters (164 to 328 feet) when approached by humans on foot.

In cases where an exception will be provided to the proponent during the April 10 to July 10 breeding and nesting time period, BLM personnel will adhere to approved protocols describing survey protocol for exceptions.

To control the population of mosquitos that might spread West Nile virus, larvicidal briquettes will be placed in standing water pools as appropriate. Adult mosquitos could also be treated with insecticides if necessary.

Greater Sage-Grouse

No surface disturbance within one-quarter mile of an occupied greater sage-grouse lek will be permitted. Linear disturbances such as pipelines and seismic activity could be granted exceptions outside the breeding season if they are determined not to have associated long-term, continuous activity that could impact breeding success.

Permanent, high-profile structures such as buildings and storage tanks will not be constructed within 0.25 mile of an occupied greater sage-grouse lek.

In selecting a site for a compressor facility, a well pad or other permanent facility, the distance from the edge of a an occupied greater sage-grouse lek will be sufficient to result in a noise level increase from operating facilities no greater than 10 decibels (dBA) above background (i.e., 39 dBA background + 10 dBA = 49 dBA). Further restrictions may be required if the species is determined by the USFWS to be eligible for listing as either threatened or endangered pursuant to the Endangered Species Act. Monitoring will be required by BLM to determine which leks in the PAPA are occupied and which have been abandoned.

If existing information is not current, field evaluations for greater sage-grouse leks and/or nests will be conducted by a qualified biologist prior to the start of activities in potential greater sage-grouse habitat. These field evaluations for leks and/or nests will be conducted if project activities are planned in potential greater sage-grouse habitat between March 15 and July 15. BLM wildlife biologists will ensure that such surveys are conducted using proper survey methods.
Operators will be required to apply noise mitigation at well locations, as determined necessary by the BLM AO, on a case-by-case basis.

Wyoming Executive Order 2008-2, and the Wyoming Stipulations for Development in Core Sage-Grouse Population Areas, will be considered when permitting activities.

Sagebrush Habitats

These guidelines (Bohne et al. 2007) include an approach to identify sage-grouse issues in landscape scale assessments, proposed habitat project planning and implementation and to build a safety net into the process to maintain or enhance sage-grouse populations. This is an approach that can be used to identify sage-grouse habitat issues and resolve conflicts in the development of vegetative treatment prescriptions, and it should be an integral part of the NEPA process where

appropriate. The Wyoming Guidelines for Managing Sagebrush Communities with an Emphasis on Fire Management (Wyoming Interagency Vegetation Committee 2002:12) provides a list of nine decision elements that should be considered when evaluating a potential sagebrush treatment. In addition to those nine elements, assessing the need for a vegetation treatment involves a general assessment of the landscape and its use by sage-grouse. The following evaluation criteria should also be considered when developing vegetation treatments in occupied sage-grouse habitat:

1) Determine if sage-grouse (or other species of interest) seasonal habitats are present, the condition of these habitats, and the relative level of importance of these habitats. In the case of sage-grouse, it is important to know whether the population is resident or migratory when evaluating potential habitats affected by proposed actions.

2) Identify how much of the sage-grouse habitat in the area has been impacted previously by fire (prescribed or wild), other habitat conversions, habitat losses, or fragmentation, preferably using a GIS-based analysis.

3) Determine how much of the area is likely to burn in future wildfire and at what scale (a risk assessment).

4) Identify the short-term (1–14 years) and mid-term effects (15–30 years) of prescribed fires or other treatments on vegetation and key wildlife species.

5) Assess the presence of undesirable plant species (e.g., cheatgrass, invasive noxious weeds, rabbitbrush, juniper and other conifer invasion) and the risk of these species increasing under current management and/or as a result of the proposed treatment.

6) Determine the likely response of desirable species of vegetation that are present to the type and intensity of treatment being proposed.

7) Provide a clear statement of the intended objectives of the prescribed treatment, provide a rational for the treatment, and identify impacts to sage-grouse and other species of interest as part of the management prescription and environmental assessment.

8) Establish overall goals along with measurable objectives and an adequate monitoring plan (adequate in terms of funding as well as quantifying the effects of treatment).

9) Identify mitigation measures (if any) needed to offset potential adverse impacts on sage-grouse habitat.
10) Develop a post treatment management plan that will ensure desired vegetative responses can be achieved and maintained.

No sagebrush control work should occur where live sagebrush cover is less than 20% (Bohne 2007).

If the herbaceous understory is depleted (reduced number of grass and forb species present), providing limited or inadequate cover, and the shrub canopy is too dense, then some vegetative treatment may be needed to restore the stand to its potential productivity and value for sage-grouse and other wildlife species. In this situation, the guidelines recommend treating no more than 20% of nesting and early brood-rearing habitat (Bohne 2007).

Sagebrush restoration techniques should be considered in areas in which sagebrush has been removed or severely fragmented by past management practices. If 40% or more of the breeding habitat of a population or subpopulation has been lost, the guidelines by Connelly et al. (2000) recommend that the remaining habitat should be protected from additional loss or degradation. In these situations, sagebrush restoration should be the priority land treatment to restore suitable shrub densities and understory vegetation to provide effective sage-grouse habitat (Bohne 2007).

Reclamation

All disturbances will be limited to the minimum necessary to enable production of the resource.

All disturbances will be returned to the approximate predisturbance contour of the land.

Predisturbance land use will be returned to the maximum extent practicable.

Where approved disturbance prohibits maintenance of use, offsite mitigation could be considered.

Reclamation will be designed to restore the affected lands to predisturbance land uses once a project is completed. While surface-disturbing or disruptive activities continue, land uses will be mitigated using revegetation, stabilization, erosion control, and habitat enhancement.

Experimental methods to maintain or reclaim wildlife habitat or improve reclamation science are encouraged to be tested on small areas within the planning area. When scientifically proven effective for a reclamation objective, these methods may be incorporated into proven reclamation methods.

All reclamation of disturbed lands will be conducted with a diverse mix of noninvasive, certified weed-free seed demonstrated effective for post-disturbance land uses and approved by the AO. In designated crucial and important wildlife habitats, this seed mix should be designed to restore predisturbance wildlife use.

A site-specific reclamation plan should be prepared for each well pad, pipeline, road, or other surface disturbing activities prior to authorization and should include the following:

Top soil storage techniques
Description of native vegetation disturbed, including species and composition
Need to collect native seed
Need for irrigation and fertilization
Need for fencing
Proposed recontouring plans and seeding/planning procedures
Definition of success

Plans for reseeding if reclamation fails.

BLM will require each individual right-of-way, APD, or other application to include a reclamation plan approved by the BLM.

Site Stabilization

On existing well pads that are not be fully developed by the second winter following construction, all bare ground will have at least a 75-percent protective cover that may include but not be limited to organic mulch, herbaceous vegetation, jute matting, or other erosion-preventative fabric.

Protective cover may be excluded on active work sites (up to the wellhead with production equipment) if justified by the operator and with BLM concurrence.

During the period when an existing well pad is not being fully developed, there will be no sediment discharge from the existing pad. Operators will modify all existing well pads to achieve zero sediment discharge for a 25-year storm or snowmelt event.

Access road(s) leading to the temporarily stabilized well pad will have protective cover to the same levels required on the well pad.

Disturbed channel beds will be reshaped to their approximate original configuration.

Streams, wetlands, and riparian areas disturbed during project construction will be restored to as near pre-project conditions as practical, and if impermeable soils contributed to wetland formation, soils will be compacted to reestablish impermeability.

Areas will be recontoured and BLM-approved species will be used for reclamation.

Reclamation activities will begin on disturbed wetland areas immediately after completion of project activities.

Upon completion of construction and/or production activities, operators will restore the topography to near preexisting contours at well sites, access roads, pipelines, and other facility sites.

All roads on federal lands not required for routine operation and maintenance of producing wells, ancillary facilities, livestock grazing administration, or necessary recreation access will be reclaimed as directed by the BLM. These roads will be permanently blocked, recontoured, reclaimed, and revegetated by the operators, as will disturbed areas associated with permanently plugged and abandoned wells.

Disturbances should be reclaimed or managed for zero sediment discharge. All excavations and pits should be closed by backfilling and contouring to conform to surrounding terrain. On well pads and larger locations, the surface use plan will include objectives for successful reclamation such as soil stabilization, plant community composition, and desired vegetation density and diversity.

On producing locations, operators will be required to reduce slopes to original contours (not to exceed 3:1 slopes). Areas not used for production purposes will be backfilled and blended into the surrounding terrain, reseeded, and erosion control measures installed. Erosion control measures will be required after slope reduction. Facilities will be required to approach zero runoff from the location to avoid contamination and water quality degradation downstream. Mulching, erosion control measures, and fertilization may be required to achieve acceptable stabilization.
Abandoned sites must be satisfactorily rehabilitated in accordance with a plan approved by the BLM. Soil samples may be analyzed to determine reclamation potential, appropriate reseeding species, and nutrient deficits. Tests may include pH, mechanical analysis, electrical conductivity, and sodium content. Terraces or elongated water breaks will be constructed after slope reduction.

All reclamation is expected to be accomplished as soon as possible after the disturbance occurs with efforts continuing until a satisfactory revegetation cover is established and the site is stabilized (3 to 5 years). Only areas needed for construction will be allowed to be disturbed.

On all areas to be reclaimed, seed mixtures will be required to be site specific and composed of native species. Seed mixtures also will be required to include species promoting soil stability. A predisturbance species composition list must be developed for each site if the project encompasses an area in which several different plant communities present. Livestock palatability and wildlife habitat needs will be given consideration in seed mix formulation. BLM guidance for native seed use is BLM Manual 1745 (Introduction, Transplant, Augmentation, and Reestablishment of Fish, Wildlife, and Plants), and Executive Order No. 11987 (Exotic Organisms).

If deemed necessary, approved sterile seed mix could be considered for use in site stabilization during reclamation.

Interseeding, secondary seeding, or staggered seeding may be required to accomplish revegetation objectives. During rehabilitation of areas in important wildlife habitat, provision will be made for the establishment of native browse and forb species, if determined to be beneficial for the habitat affected. Follow-up seeding or corrective erosion control measures may be required on areas of surface disturbance which experience reclamation failure.

Any mulch and mineral material (sand and gravel) used will be certified weed free and free from mold or fungi. Mulch may include native hay, small grain straw, wood fiber, live mulch, cotton, jute, synthetic netting, and rock. Straw mulch should contain fibers long enough to facilitate crimping and provide the greatest cover.

Noxious Weeds

Operators will monitor noxious weed occurrence on the project area and implement a noxious weed control program in cooperation with the BLM and Sublette County to ensure noxious weed invasion does not become a problem. Weed-free certification by county extension agents will be required for grain or straw used for mulching revegetated areas. Gravel and other surfacing materials used for the project will be free of noxious weeds.

The operator, grantee, or lessee will be responsible for the control of all noxious weed infestations on surface disturbances. Prior to any treatment, the operator, grantee, or lessee will be responsible for submission of Pesticide Use Proposals and subsequent Pesticide Use Reports. Control measures will adhere to those allowed in the *Final Vegetation Treatments Using Herbicides on BLM in 17 Western States Programmatic EIS* (June 2007) and ROD (September 2007), *Rock Springs District Noxious Weed Control EA* (USDI 1982a), or the *Regional Northwest Area Noxious Weed Control Program EIS* (USDI 1987). Herbicide approvals and treatments will be monitored by the BLM AO. Herbicide applications will be kept at least 500 feet from known SSPS populations. Aerial application of chemicals is prohibited within one-quarter mile of special status plant locations, or other distance deemed safe by the BLM AO.

Hazardous Waste Disposal

Operators will use WDEQ-approved portable sanitation facilities at drill sites; place warning signs near hazardous areas and along roadways; place dumpsters at each construction site to collect and store garbage and refuse; ensure that all refuse and garbage is transported to a state-approved sanitary landfill for disposal; and institute a Hazard Communication Program for its employees and require subcontractor programs in accordance with OSHA (29 CFR 1910.1200).

In accordance with 29 CFR 1910.1200, a Material Safety Data Sheet for every chemical or hazardous material brought on-site will be kept on file at the operator's field office.

Chemical and hazardous materials will be inventoried and reported in accordance with the SARA Title III (40 CFR 335). If quantities exceeding 10,000 pounds or the threshold planning quantity are to be produced or stored, the appropriate Section 311 and 312 forms will be submitted at the required times to the State and County Emergency Management Coordinators and the local fire departments.

Any hazardous wastes, as defined by the Resource Conservation and Recovery Act of 1976 (RCRA), as amended, will be transported and/or disposed of in accordance with all applicable federal, state, and local regulations.

Owners or operators of onshore facilities (any facility of any kind, or drilling or workover rigs), which because of their location could be reasonably expected to discharge oil in harmful quantities (as defined in 40 CFR part 110 and 112.3) into or upon navigable waters of the United States or adjoining shorelines, will prepare a Spill Prevention Control and Countermeasure Plan (SPCC Plan) in accordance with 40 CFR 112.7. Owners or operators of drilling or workover rigs need not prepare a new SPCC Plan each time the facility is moved to a new site. The SPCC Plan may be a general plan, using good engineering practices (40 CFR 112.3 (a), (b), and (c)). Owners or operators of a facility for which an SPCC Plan is required will maintain a complete copy of the SPCC Plan at such facility if the facility is normally attended at least 8 hours per day, or at the nearest field office if the facility is not so attended (40 CFR 112.3(e)).

SPCC Plans will be implemented and adhered to in a manner such that any spill or accidental discharge of oil will be remediated. An orientation should be conducted by the operators to ensure that project personnel are aware of the potential impacts that can result from accidental spills and that they know the appropriate recourse if a spill occurs. Where applicable and/or required by law, streams at pipeline crossings will be protected from contamination by pipeline shutoff valves or other systems capable of minimizing accidental discharge. If reserve pit leakage is detected, operations at the site will be curtailed, as directed by the BLM, until the leakage is corrected.

All natural gas wells will be cased and cemented to protect subsurface mineral and freshwater zones. Unproductive wells and wells that have completed their intended purpose will be properly abandoned and plugged using procedures identified by the Office of State Oil and Gas Supervisor, Rules and Regulations of WOGCC and the BLM.

Appendix H
Cimarex Drilling Plans

April 23, 2008

United States Department of Interior
Bureau of Land Management
Division of Oil and Gas
Pinedale Field Office
Pinedale, WY

CIMAREX ENERGY CO
RILEY RIDGE #20-14
Engineering and Geology
WORK COPY

Attention:

RE: Cimarex Energy Co.
Application for Permit to Drill (APD)

Riley Ridge #20-14
Location: 836' From the South Line and 2242' From East Line (Staked)
Section 17-T29N-R114W, Sublette County, Wyoming

Gentlemen:

Enclosed herewith you will find our completed APD regarding the referenced tract of land, surveyor's plats, a topographic plat, and several area location plats outlining our proposed oil and gas operations.

The following narrative provides the information required for completing

I. Form 3160-3 APPLICATION FOR PERMIT TO DRILL,
II. SUPPLEMENTAL ADMINISTRATIVE, ENGINEERING & GEOLOGICAL INFORMATION TO APD,
III. SUPPLEMENTAL ENVIRONMENTAL INFORMATION TO APD.

I. Form 3160-3 BASIC INFORMATION

A. See Attached Form 3160-3

This APD assumes continuous drilling operations on a 24 hours per day, 7 days per week until well is completed in an efficient and economical operation.

Riley Ridge #20-14 is located 19.5 miles from Big Piney, WY on a 260 degree azimuth. The proposed bottom hole location has a displacement of 5,092' on a 200° azimuth.

B. Signed surveyor's plats are attached. (scale no greater than 1" = 1000')
See Attachment #1 for surface and bottom hole locations.

C. NO Signatures have been affixed.

D. Casing program and cementing program – See Attachment #2, Drilling Prognosis and Attachment #3, Casing Design Table.

E. Supplemental information to the casing program - for each string.

1. Size, weight, grade, thread/coupling, minimum burst, collapse, body and joint yields for new/used API casing. See Attachment #3, Casing Design Table.

2. New casing will be used.

3. Setting depths (TVD) and name of reservoir bed/zone at casing seat.

0-140' Conductor	Conglomerate
0-±2600' Surface	Conglomerate
0-±11,750' Intermediate	Below Nugget
0-±16,000' Production	Darby

4. Maximum anticipated hydrostatic fluid weight behind string for collapse, and maximum anticipated bottom hole pressure for burst based on TVD measurements.

	MUD WEIGHT	ESTIMATED BOTTOM HOLE PRESSURE	ANTICIPATED SURFACE SHUT- IN PRESSURE
Conductor	8.3	24	100
Surface	8.5	1,149	700
Intermediate	9.5	5,805	3,200
Production	10.0	8,320	3,400

5. Design factors for joint, tension, collapse, burst.

Joint/Tension/Body	1.7
Collapse	1.125
Burst	1.100

6. Pore pressure and fracture pressure gradients based on TVD measurements.

Pore Pressure @ 2600' TVD =	0.44 psi/ft	1,144 psig
Fracture Pressure @ 2400' TVD =	0.70 psi/ft	1,820 psig
Pore Pressure @ 11,750' TVD =	0.44 psi/ft	5,170 psig
Fracture Pressure @ 11,750' TVD =	0.70 psi/ft	8,225 psig
Pore Pressure @ 16,000' TVD =	0.44 psi/ft	7,040 psig
Fracture Pressure @ 16,000' TVD =	0.70 psi/ft	11,200 psig

F. Supplemental information to the cement program - for each string.

1. Amount and type of cement, including additives to be used, slurry weights, and slurry mixes (cubic ft. per sack).

ALL CEMENTING PROGRAMS WILL BE REVIEWED AND UPDATED

BASED ON WATER TESTS, LOG DATA AND HOLE CALIPER SIZE. THIS WILL ALLOW FOR POTENTIAL IMPROVEMENTS IN CEMENTING DESIGN, EQUIPMENT AVAILABILITY, AND WEATHER CONDITIONS. IF CHANGES ARE NECESSARY, A SUNDRY NOTICE WILL BE PREPARED TO DOCUMENT THE CHANGES FOR STATE AND FEDERAL APPROVAL.

16" Surface:

Lead: 4340 sx 35:65 Poz:Class G cement + 4% Bentonite gel (D20) + 3% CaCl (S1) + 0.25 pps CelloFlake (D29), Weight 12.5 ppg, Yield 1.88 ft^3/sx, Excess 124%, Planned TOC: Surface

Estimated Compressive Strength:

3 HR @ 80° F	50 psi
24 HR @ 80° F	267 psi
32 HR @ 80° F	650 psi
72 HR @ 80° F	910 psi

Tail: 860 sx Class G cement + 0.25 ppg CelloFlake (D29), Weight 15.8 ppg, Yield 1.15 ft^3/sx, Excess 0%, Planned TOC 2,100'

Estimated Compressive Strength:

3 HR @ 80° F	50 psi
5 HR @ 80° F	500 psi
24 HR @ 80° F	3100 psi
72 HR @ 80° F	4850 psi

Top Out: 250 sx Class G cement + 2% CaCl (S1), Yield 1.15 ft^3/sx, Weight 15.8 ppg, Excess 0% Planned Top Out for 100'

10-3/4" Intermediate

Lead: 1990 sx CemCRETE Blend + 0.35% MidTemp Retarder (D800) + 0.2% Antifoam (D46)+ 0.1% Uniflac (D167) +0.5% TIC Dispersant (D65), 11.54 ppg, Yield 1.69, Water 5.39, Excess 25% Planned TOC: 7,000'

Estimated Compressive Strength:

12 hrs	50 psi,
24 hrs	500 psi
48 hrs	719 psi
72 hrs	1220 psi

Tail: 370 sx Clas G + 0.3% Uniflac (D167) +0.25% Cement Retarder (D198) +0.25% TIC Dispersant (D65) + 0.2% Antifoamer (D46), 15.8 ppg, Yield 1.15, Water 4.99, Excess 25%, Planned TOC 11,800'

Estimated Compressive Strength:

10 hrs	50 psi
12 hrs	500 psi
48 hrs	3094 psi

72 hrs 3190 psi

7-5/8" x 7" Production Casing:

Lead: 600 sx CemCRETE Blend cement + 0.5% Mid Temp Retarder (D800) +0.2% Uniflac (D167) +0.5% TIC Dispersant (D65), 11.54 ppg, Yield 1.69, Excess 20%, Planned TOC: 12,200'

Estimated Compressive Strength:

12 hrs	50 psi
24 hrs	500 psi
48 hrs	719 psi
72 hrs	1220 psi

Tail: 100 sx Class G cement + 3% D20 +0.8% D112 + 0.5% D198 + 0.1% D65 +0.2% D46 +35% D66, 14.5 ppg, Yield 1.88, Water 8.76, TOC 16,400'

Estimated Compressive Strength:

5 hrs	50 psi
6 hrs	500 psi
48 hrs	1272 psi
72 hrs	1272 psi

2. If stage cementing techniques are to be used, identify setting depths of stage collars and description of each stage.

   On the 16" surface casing, the bottom of the casing will be cemented conventional. After tail cement has sufficient strength, 1" pipe may be run to 100' from surface and the top of the casing will be cemented.

3. Anticipated fill of each stage, e.g. height above casing shoe.

16" Surface Casing		Surface
Lead	Surface – 2,100'	
Tail	2,100-2,600'	
10-3/4" Intermediate Casing		7,000'
Lead	7,000-11,800'	
Tail	11,8000-12,372'	
7-5/8x7" Production Casing	(500' into Int. Csg)	11,900'
Lead	11,900-16,350'	
Tail	16,350-17,025'	

4. For each stage, indicate the anticipated minimum "wait on cement time" to achieve the minimum compressive pressure requirement of 500 psig at the casing shoe with the tail cement. (See Cement Program above – Item E. 1.)
   WOC Surface cement at the casing shoe is 5 hrs.
   WOC Intermediate cement at the casing shoe is 12 hrs.

WOC Production cement at the casing shoe is 6 hrs.

5. Surface casing statement. Surface casing will be set to a depth of 2,600 feet and cemented to surface. A top cement stage is planned to 100 ft with 1" pipe.

G. Drilling program.

This APD assumes continuous drilling operations on a 24 hours per day, 7 days per week from start of mobilization until well is completed in an efficient and economical operation.

1. Lease/well name, surface location and bottom hole location

   Riley Ridge #20-14 Surface Location: Lat: 42°29'41.49" (NAD 83) Long: 110°26'40.72"
   836' FSL & 2242' FEL, Section 17-T29N-R114W, 6th P.M., Sublette Co, WY

   Bottom Hole Location: Lat: 42°28'53.81" Long: 110°27'02.28" (NAD 83)
   1320' FSL and 1320' FWL, Sec. 20-T29N-R114W, 6th P. M., Sublette Co., WY

2. Geologic name of surface formation. Conglomerate

3. Estimated tops and bottoms of all important geologic markers; include over/under pressure data. See Attachment #4, Geologic Formation Tops in TVD Measurement

4. Estimated tops and bottoms of all zones anticipated to have possible fluid occurrence (oil, gas, water) or other minerals; include plan to protect these zones. For treatable water zones, identify the source document that defines top of water. See Attachment #4, Geologic Formation Tops, TVD Measurement

   All zones with the possibility of oil & gas production after evaluation of samples, drill rate penetration, mud log, and open hole wireline logs will be covered with cement as warranted.

   The anticipated depths at which water bearing formations are expected to be encountered are determined by the State of Wyoming and will be protected by the surface cementing operations.

5. Pressure control equipment:
   a. A schematic diagram of the final BOP stack showing sizes and pressure ratings is shown in Attachment #5.

      The minimum BOPE to be used is 5,000 psi rated. This is based on the maximum 10.0 ppg mud weight to drill to 16,000' TVD for a BHP of 8320 psig less 3,520 psi (0.22 psi/ft x 16,000 ft = 3,520 psi) equals 4,800 psi. The proposed 10,000 psig BOP stack and manifold meet the minimum requirements of the 5,000 psi rated stack.

b. If stack changes for different depths, indicate depth and stack used for control to that depth (either on diagram or in written procedure)

No stack changes are planned.

c. Schematic of manifold showing sizes and pressure ratings is attached. See Choke Manifold General Layout, Attachment #5

d. BOP will be installed on casing head after drilling and setting 16" surface casing. Pressure tests will be conducted as needed & after nippling up on each string of casing. Ram-Type preventers shall be actuated to test proper functioning once during every trip not to exceed once a day. The annular-type blowout preventer shall be actuated on the drill pipe at least once each week.

6. Air drilling will not be used for this proposed action.

7. Mud program
   a. Type, weight, and characteristic of mud to be used in each drilling stage (depth).

Measured Depth	Mud Weight	P.V.	YP	API F.L.	pH	% LGS	% LGS
30" CONDUCTOR SET AT ±140' LOW SOLIDS PRE-HYDRATED FRESHWATER MUD							
±140 – 2,600'	8.4-8.6	5-15	6-10	N/C	8.5-9.0		
SET 16" SURFACE CASING LOW SOLIDS NON-DISPERSED FRESHWATER MUD							
2,600-3500	8.6-8.8	5-15	6-10	N/C	9.0-9.5		
±3,500'-6,000'	8.8-9.3	5-15	6-10	N/C-15	9.5-10.0	≤8	
LOW SOLIDS / DISPERSED FRESH WATER MUD FOR SHALE CONTROL							
6,000'-±12,393'	8.8-9.3	5-15	6-10	15-8	9.0-9.5	≤8	
SET 10-3/4" INTERMEDIATE CASING DISPLACE WITH 8.2-8.4 ppg Oil Based Mud							
				HTHP	OWR	Ca_2CL	ES Volts
12,393'-16,977'	8.0-8.4	15-20	12-15	15-12	9.0-9.5	20%	500-700
(Option) SET 10-3/4" INTERMEDIATE CASING DISPLACE WITH 10.0 SATURATED SALTWATER MUD							
12,393 - 14,800'	10.0	12-20	8-15	15-12	9.0-9.5	≤8	
14,800-16,977'	10.0-10.5	12-25	8-15	12-10	10.0-10.5	≤8	

b. Types and quantities of mud, weighting material, lost circulation material, etc., to be maintained at location.

Quantity	Product	Use	Size
450 sks	Bentonite	Viscosifier	100 lb bag
40 sks	Lime	pH agent	50 lb bag
90 sks	Caustic Soda	pH agent	50 lb bag
150 sks	Cottonseed Hull	Loss circ. Material	50 lb bag
750 sks	Barite	Weighting Material	100 lb bag
75 sks	Lignite	Ph agent	50 lb bag
75 sks	Mica	Lost circ. Material	50 lb bag
30 sks	Soda Ash	Ph agent	100 lb bag
60 sks	CF Desco	Mud Thinner	25 lb bag
20 sks	Drispac R	Water Loss Control	50 lb bag
150 bbls	ABO	Water Loss Control	bulk tank

c. Monitoring equipment to be used in the mud system

PVT Equipment from 6,000' to TD

d. Mud logger identification, if applicable. A mud logger will be utilized from approximately 6,000' to TD.

8. Anticipated types and amounts of testing, logging, and/or coring is as follows:
Sidewall Cores, RFTs, & DSTs may be planned from open hole log data
Minimum Logging consisted of

Dual Induction-GR	2,600' - TD,
CNL-FDC-GR	7,000' – TD.

9. Drilling conditions.

a. Anticipated abnormal pressures; include names and depths.

Madison	15,380' TVD	7.7-7.8 ppg EMW	6,200 psig

b. Anticipated abnormal temperatures; include zone names and depths.

Abnormal temperatures are not anticipated.

c. Anticipated lost circulation zones by formation name and depth (ft TVD).

Mesaverde	2,532
Nugget	11,609
Madison	15,380

d. Other potential hazardous zones, e.g., hydrogen sulfide, etc by formation name and depth (ft TVD).

Thaynes	12,827	Potential 400' thick salt formation
Phosphoria	14,212	First H_2S potential influx
Madison	15,380	H_2S and CO_2 influxes

e. Contingency plan for any of the above is as follows:
   1. Mud will be pretreated with LCM for loss circulation zones and available to be added as needed in the event other losses are encountered.
   2. The surface and intermediate hole may require Nitrogen to be injected into mud to lighten fluid density and oxygen scavenger may be added to control corrosion.
   3. The mud system will be broke over at ±6,000' to begin controlling the API fluid loss with the addition of lignite.
   4. AN Oil Based Mud (OBM) system will be used below the intermediate casing string to control the salt in the Thaynes formation.
   5. A Garrett Gas Train will be used below 12,000' to identify and determine the concentrations of Hydrogen Sulfide (H_2S) and Carbon Dioxide (CO_2). Draeger tubes will be used for quantitative analyses.
   6. The mud system will be treated with a water-soluble zinc chelate liquid design to scavenge the H_2S beginning at 14,000 ft TVD.
   7. CO_2 will be controlled by maintaining the pH in the recommended range above 10.5.

10. Any other facets of the proposed drilling operation which might aid in the consideration of this application are as follows:

    A. Per BLM Order No. 6, a H_2S Drilling Operations Plan has been prepared as a separate document.
    B. Per BLM Order No. 6, a Public Protection Plan has been prepared as a separate document.
    C. When drilling operations are complete, a temporary abandonment tree will be installed as shown in Attachment #6.
    D. Manufacturer's casing specifications and thread specifications are shown in Attachment #7.

T29N, R114W, 6th P.M.

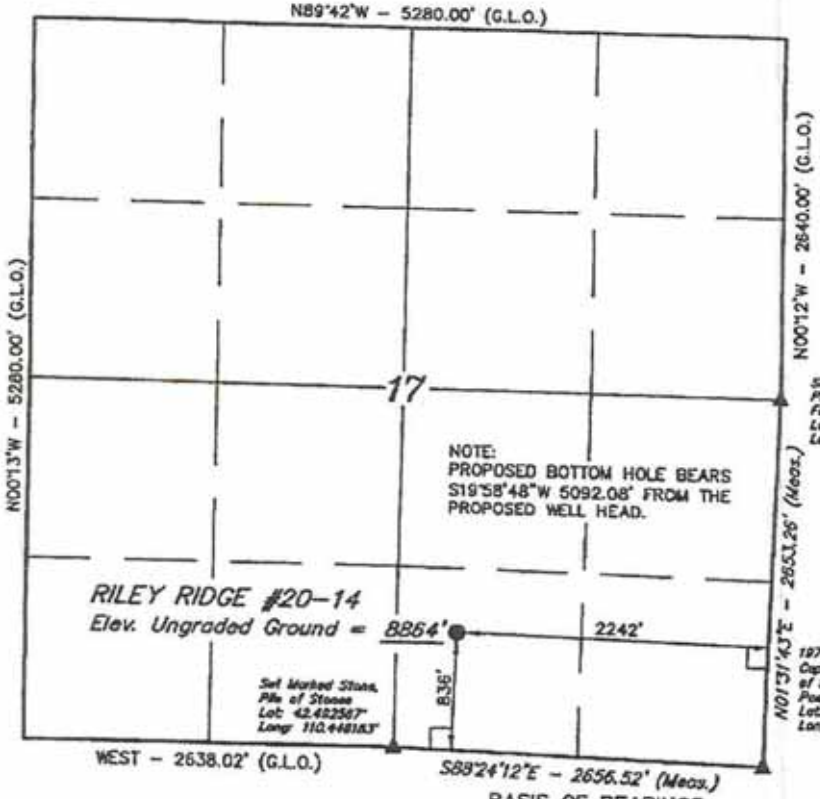

CIMAREX ENERGY CO

Well location, RILEY RIDGE #20–14, located as shown in the SW 1/4 SE 1/4 of Section 17, T29N, R114W, 6th P.M., Sublette County, Wyoming.

BASIS OF ELEVATION

SPOT ELEVATION AT THE NORTHEAST CORNER OF SECTION 5, T29N, R114W, 6th P.M. TAKEN FROM THE SPRINGMAN CREEK QUADRANGLE, WYOMING, SUBLETTE COUNTY, 7.5 MINUTE QUAD. (TOPOGRAPHIC MAP) PUBLISHED BY THE UNITED STATES DEPARTMENT OF THE INTERIOR, GEOLOGICAL SURVEY. SAID ELEVATION IS MARKED AS BEING 8329 FEET.

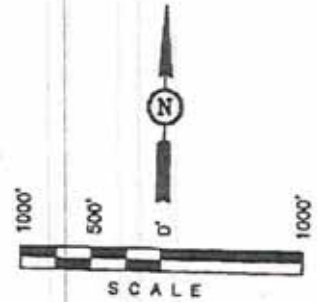

CERTIFICATE

THIS IS TO CERTIFY THAT THE ABOVE PLAT WAS PREPARED FROM FIELD NOTES OF ACTUAL SURVEYS MADE BY ME OR UNDER MY SUPERVISION AND THAT THE SAME ARE TRUE AND CORRECT TO THE BEST OF MY KNOWLEDGE AND BELIEF.

REGISTERED LAND SURVEYOR REGISTRATION NO. 168 STATE OF WYOMING

REVISED: 03-27-08 C.G.

BASIS OF BEARINGS

BASIS OF BEARINGS IS A G.P.S. OBSERVATION.
(NAD 83)
LATITUDE = 42°29'41.49" (42.494858)
LONGITUDE = 110°26'40.72" (110.444644)
(NAD 27)
LATITUDE = 42°29'41.71" (42.494919)
LONGITUDE = 110°26'38.10" (110.443917)

LEGEND:

- ⌊ = 90° SYMBOL
- ● = PROPOSED WELL HEAD.
- ▲ = SECTION CORNERS LOCATED.

UINTAH ENGINEERING & LAND SURVEYING
85 SOUTH 200 EAST – VERNAL, UTAH 84078
(435) 789-1017

SCALE 1" = 1000'	DATE SURVEYED: 11-08-07	DATE DRAWN: 11-20-07
PARTY J.R. Z.G. C.H.	REFERENCES G.L.O. PLAT	
WEATHER COOL	FILE CIMAREX ENERGY CO	

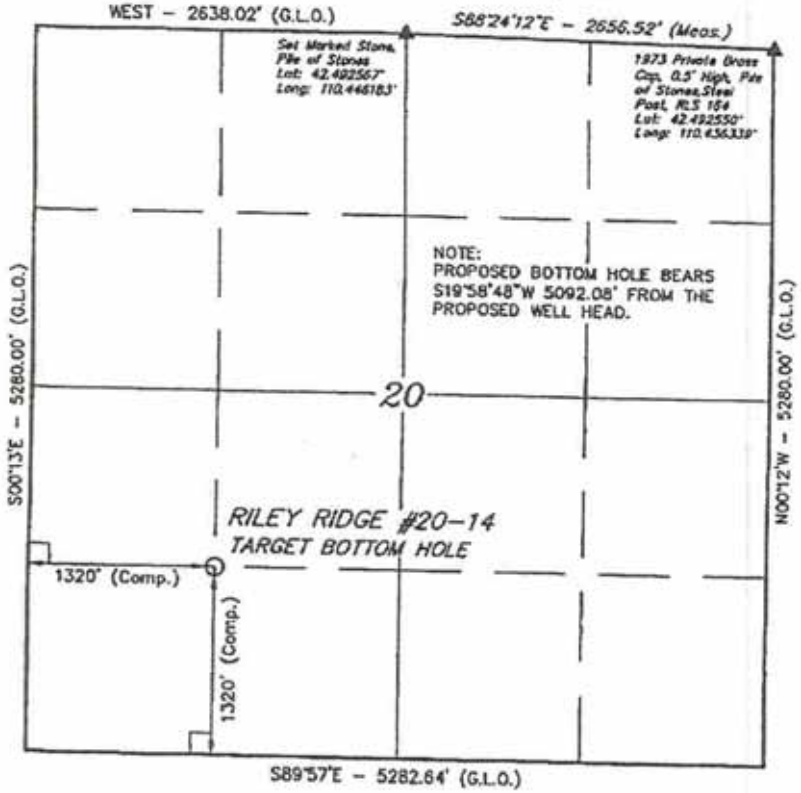

LEGEND:

└ = 90° SYMBOL

● = PROPOSED WELL HEAD.

▲ = SECTION CORNERS LOCATED.

BASIS OF BEARINGS

BASIS OF BEARINGS IS A G.P.S. OBSERVATION.

(NAD 83)
LATITUDE = 42°28'53.81" (42.481614)
LONGITUDE = 110°27'02.28" (110.450633)
(NAD 27)
LATITUDE = 42°28'54.03" (42.481675)
LONGITUDE = 110°26'59.65" (110.449906)

CIMAREX ENERGY CO

Well location, RILEY RIDGE #20-14 (TARGET BOTTOM HOLE), located as shown in the SW 1/4 of Section 20, T29N, R114W, 6th P.M., Sublette County, Wyoming.

BASIS OF ELEVATION

SPOT ELEVATION AT THE NORTHEAST CORNER OF SECTION 5, T29N, R114W, 6th P.M. TAKEN FROM THE SPRINGMAN CREEK QUADRANGLE, WYOMING, SUBLETTE COUNTY, 7.5 MINUTE QUAD. (TOPOGRAPHIC MAP) PUBLISHED BY THE UNITED STATES DEPARTMENT OF THE INTERIOR, GEOLOGICAL SURVEY. SAID ELEVATION IS MARKED AS BEING 8329 FEET.

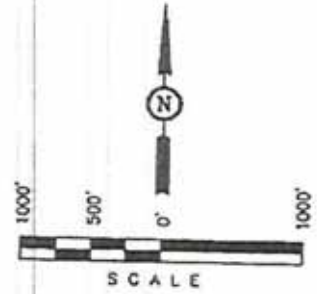

CERTIFICATE

THIS IS TO CERTIFY THAT THE ABOVE PLAT WAS PREPARED FROM FIELD NOTES OF ACTUAL SURVEYS MADE BY ME OR UNDER MY SUPERVISION AND THAT THE SAME ARE TRUE AND CORRECT TO THE BEST OF MY KNOWLEDGE AND BELIEF.

REGISTERED LAND SURVEYOR
REGISTRATION NO. 489
STATE OF WYOMING

REVISED: 03-27-08 C.G.

UINTAH ENGINEERING & LAND SURVEYING 85 SOUTH 200 EAST – VERNAL, UTAH 84078 (435) 789-1017			
SCALE 1" = 1000'		DATE SURVEYED: 11-08-07	DATE DRAWN: 11-20-07
PARTY J.R. Z.G. C.H.		REFERENCES G.L.O. PLAT	
WEATHER COOL		FILE CIMAREX ENERGY CO	

Attachment #2 - Drilling Prognosis & Directional Plan

CIMAREX

Drilling Prognosis

Well:	Riley Ridge 20-14	AFE No.:	247007
Location:	Sec 17 T29N R114W	Property No.:	497199-003
County, State	Sublette Co., WY	Field:	Riley Ridge Field
Surface Location:	836' FSL & 2242' FEL (Staked)	Objective:	Madison @ 15,380' TVD
Target Location:	1,320' FSL & 1,320' FWL Sec 20 T29N R114W	TD (TVD/MD):	16,000' TVD / 16,977' MD
Target Location:		Cementing:	Schlumberger
E-Mail:		Mud:	
Wellhead:	16" 5M SOWx 16-3/4" 5M x 13-5/8" 5M x 11"5M	Rig:	
Tubing Head:	5-1/8" 5M side valves	Offset Wells:	Riley Ridge #17-34
Xmas Tree	11" 5M with 5-1/8" 5M bore & side valves	Estimated BHP:	6,200 psig at 1,,380' TVD
Tubing:	3-1/2" 12.95# P-110 BTS-6 internally coated		7.75 ppg EMW at 15,380' TVD
Superintendent:	Larry Seigrist	Estimated BHT:	295 deg F at 15,380' TVD
Engineer:	Robert Huizenga	Vertical Displacement:	5,092' at 200"
	Eddie Wright		

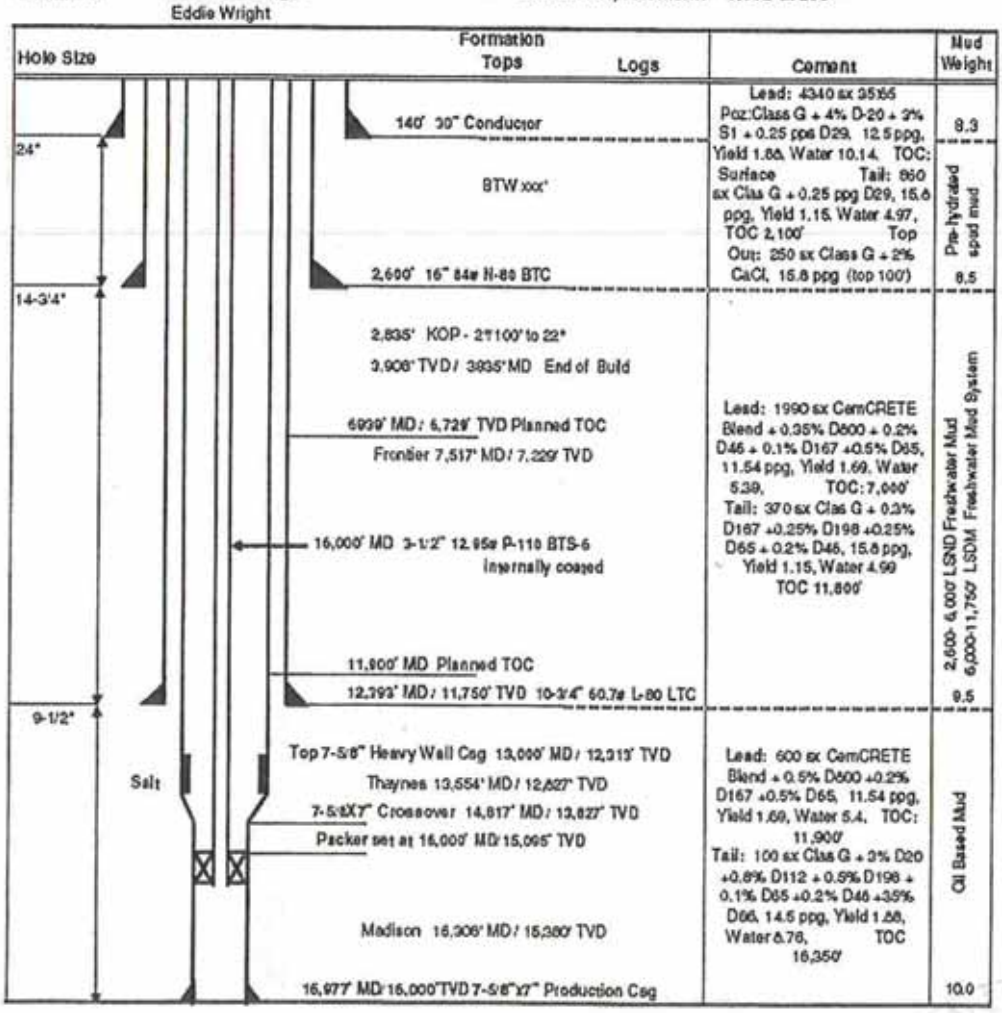

Cimarex Energy Co.

HALLIBURTON
Sperry Drilling Services

Project: Sublette County, WY (True North/NAD 83)
Site: Riley Ridge
Well: No 20-14
Wellbore: Wellbore #1
Plan: Plan #1
Rig: TBD

WELLBORE TARGET DETAILS (MAP CO-ORDINATES)

Name	TVD	+N/-S	+E/-W	Northing	Easting	Shape
No 20-14 BHL	15760.00	-4796.00	-1719.00	1050337.91	2525507.88	Point

SECTION DETAILS

MD	Inc	Azi	TVD	+N/-S	+E/-W	DLeg	TFace	VSec	Annotation
0.00	0.00	0.00	0.00	0.00	0.00	0.00	0.00	0.00	
5075.00	0.00	0.00	5075.00	0.00	0.00	0.00	0.00	0.00	Start Build
6425.14	27.00	199.71	6375.71	-294.01	-105.32	2.00	199.71	312.31	End Build
6957.64	27.00	199.71	15760.00	-4796.00	-1719.00	0.00	0.00	5094.42	TD

Surface Location:

US State Plane 1983
Wyoming Western Zone
Elevation: GL 8864' + KB 32' @ 8896.00ft (TBD)

Northing	Easting	Latitude	Longitude
1055133.91	2527225.88	42° 29' 41.490 N	110° 26' 40.720 W

To convert a Magnetic Direction to a Grid Direction, Add 12.54°

Magnetic Model: BGGM2007 Date: 26-Mar-08
Azimuths to Grid North

CASING DETAILS

TVD	MD	Name
2750.00	2750.00	Surface Casing
11750.00	12457.00	Int Casing

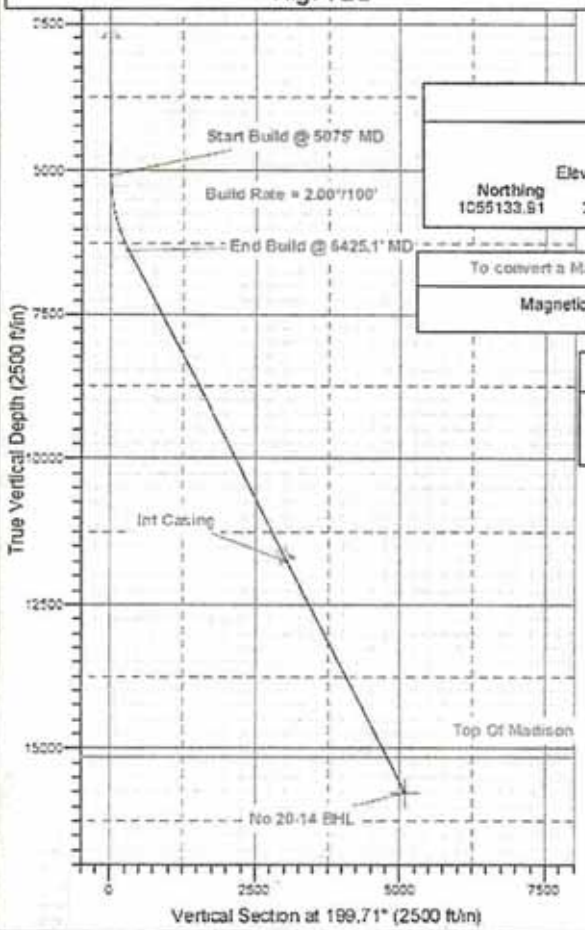

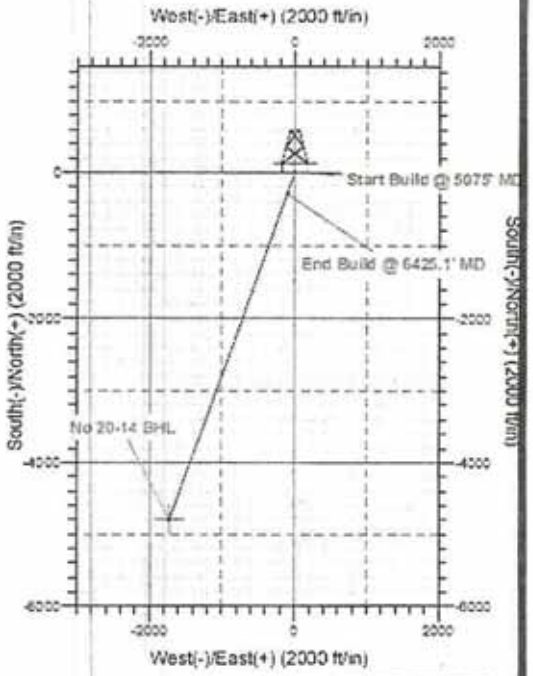

Created By: Jeff Harwood Date: 3/26/2008

RILEY RIDGE #20-14

SET DEPTH (ft MD)	SET DEPTH (ft TVD)	SECTION LENGTH (ft MD)	Casing OD (in)	WT	GRADE	THREAD	ID	Drift	Cplg OD	SI Surface Pressure & BHP (psig)	Mud Wt (ppg)	Mud Wt (psi)	Colapse (psig)	Colapse SF	Burst (psig)	Burst SF	Sect Csg wt in Air (lbs)	Cum Csg Wt in Air (lbs)	Tension Body (Klbs)	Body Tension SF	Connection Tension (k lbs)	Connection Tension SF
Conductor																						
140	140	140	30"							100	8.3	60										
Surface Casing																						
2,600	2,600	2,600	16"	84	N-80	BTC	15	14.823	17.00	700	8.5	1,149	1,480	1.29	4,330	6.19	218,400	218,400	1,929	8.83	1,156	5.29
Intermediate Casing																						
12,372	11,750	12,372	10-3/4"	60.7	L-80 HC	BTC	9.66	9.504	11.75	3,200	9.5	5,805	6,590	1.14	10,650	3.33	750,980	750,980	1,398	1.86	1,428	1.90
Production Casing																						
400	400	400	7-5/8"	39	C-110	TC-II	6.63	6.500	8.5	3,300	10.0	208	11,080	53.27	12,900	3.91	15,600	678,538	1,231	1.81	1,231	1.81
13,000	12,313	12,600	7-5/8"	39	T-95 E	TC-II	6.63	6.500	8.5	5,600	10.0	6,403	10,000	1.56	16,340	2.92	491,400	662,938	1,119	1.69	1,119	1.69
14,817	13,827	1,817	7-5/8"	52.8	L-80	LTC	6.2	6.076	8.5	5,900	10.0	7,190	18,620	2.59	14,050	2.38	95,938	171,538	1,237	7.21	737	4.30
16,977	16,000	2,160	7"	35	L-80	LTC	6	5.879	7.656	6,200	10.0	8,320	10,180	1.22	9,240	1.49	75,600	75,600	814	10.77	734	9.71
Production String																						
16,000	15,095	16,000	3-1/2"	13	P-110	BTS-6	2.75	2.625	5.3125	3,900	10.0	7,849	20,090	2.56	19,690	5.97	207,200	207,200	386	1.86	387	1.87
Top of Madison																						
-	15,390									6,200	7.8											

Attachment #4 – Formation Tops in TVD Measurements from Riley Ridge #17-14

Riley Ridge #17-34

Vertical well on existing pad drilled to 16,336' MD/16,333' TVD with drift 172.5' South

Spud	TD Date	TD Depth	Lat.	Long.	Elevation	RKB
9/12/81	3/16/82	16,370	42.4495	-110.444	8,828	8,851

	Zone	TVD	Sub Sea	
Tertiary				
	Mesaverde	2532	6,319	Possible loss zone
	Set 16" 84# N-80 BTC for Surface Casing at 2,600' TVD with cement to surface			
Upper Cretaceous				
	Hilliard	3,838	5,013	
	Frontier	7,229	1,622	Possible pressure
		8,000		Begin testing for bacteria in mud at
Lower Cretaceous				
	Mowry	8,943	(92)	Hard Shale
	Muddy/Silt/Sh / SD	9,154	(303)	
	Thermopolis	9,189	(338)	
	Dakota	9,308	(457)	Sand with gas show
	Gannett	9,619	(768)	pH sensitive shale
Jurassic		10,000	Begin adding 4ppb LCM and 2-5% mineral oil or Diesel	
	Stump	10,492	(1,641)	Possible Anhydrite- keep pH at 10.5
	Preuss	10,544	(1,693)	Possible Anhydrite- keep pH at 10.5
	Twin Creek	10,744	(1,893)	Possible Anhydrite- keep pH at 10.5
				Anhydrite may cause high viscosity mud
	Gypsum Springs	11,433	(2,582)	High calcium influx
		11,450	(2,599)	Increase LCM to 12 ppb for Loss Circulation
				Trip for spiral drill collars in BHA
	Nugget	11,609	(2,758)	Might be loss zone
	Set 10-3/4" 60.7# L-80 LTC at 11,750' TVD for Intermediate Casing with cement to 7,000'			
				May losse mud while cementing
				Displace plug with 8.2-8.4 ppg OBM
				No LCM in OBM
Triassic				
	Ankareh	12150	(3,299)	Sand with Lime/Gyp stringers
	Thaynes	12827	(3,976)	Salt formation
	Woodside	13288	(4,437)	
	Dinwoody	14082	(5,231)	
Permian				
	Phosphoria	14212	(5,361)	First H2S shows
	Weber	14530	(5,679)	Hard sand with slow drilling
Pennsylvania				
	Amsden	14924	(6,073)	
	Darwin	15280	(6,429)	
Mississippian				
	Madison	15380	(6,529)	7.8 ppg EMW (6200 psig)
				Potential for high CO2 (70%) influx
				Potential for high H2S (5%) influx
				Subpressured & possible losses
	Set 7-5/8" x 7" at 16,000' TVD Production Casing with cement into Intermediate Casing.			
	Verify cement design for 500' into Intermediate Casing			
Devonian				
	Three Forks	16281	(7,430)	
	Derby	16301	(7,450)	
	TD	16370	(7,519)	

Attachment# 5 - Pressure control equipment

A diagram of the BOP stack showing sizes and pressure ratings is shown below. This equipment exceeds the requirements of the 5M system per Order No. 2.

BOPE General Layout

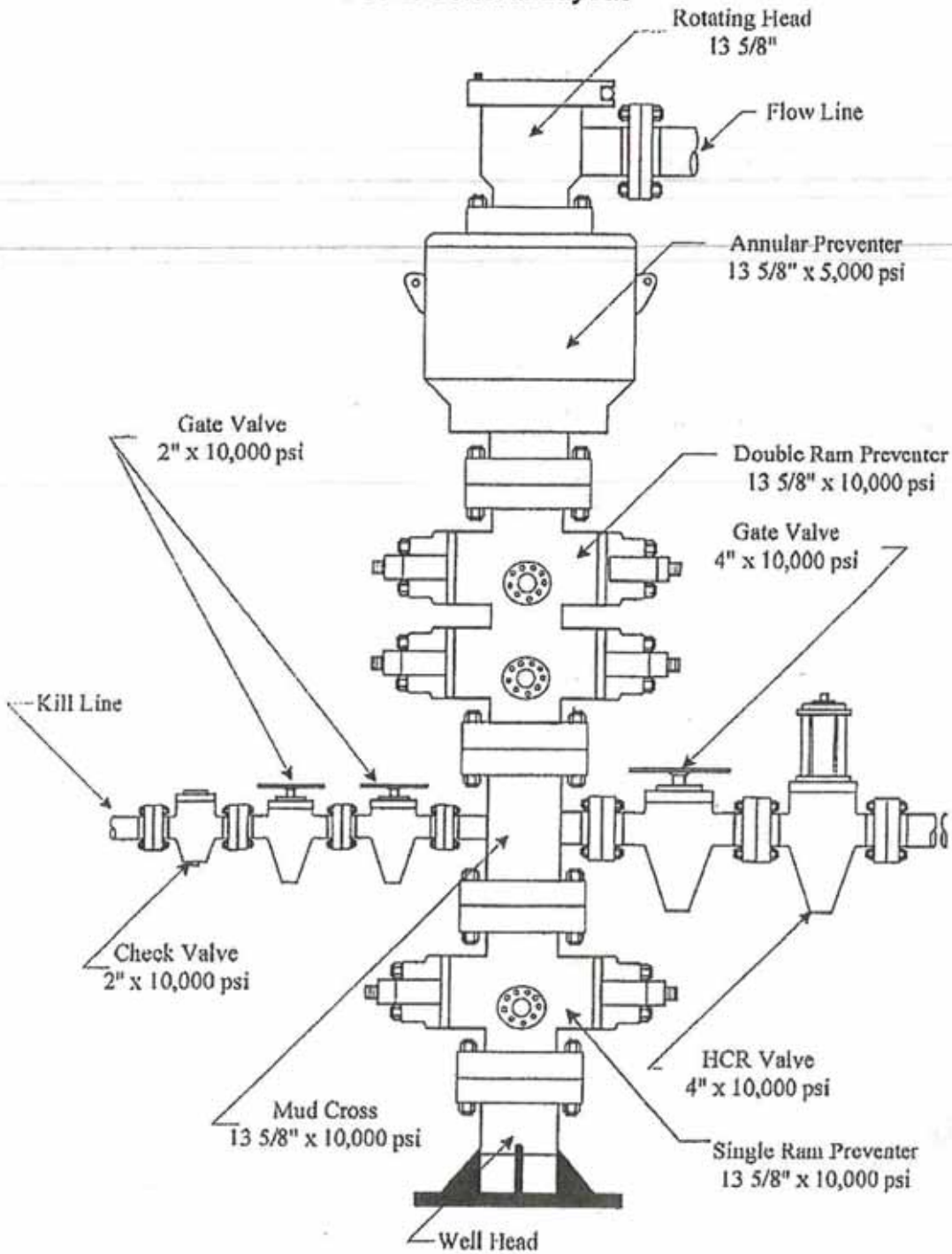

Schematic of manifold showing sizes and pressure ratings which exceeds all requirements of 5M system per Order No. 2

Choke Manifold General Layout

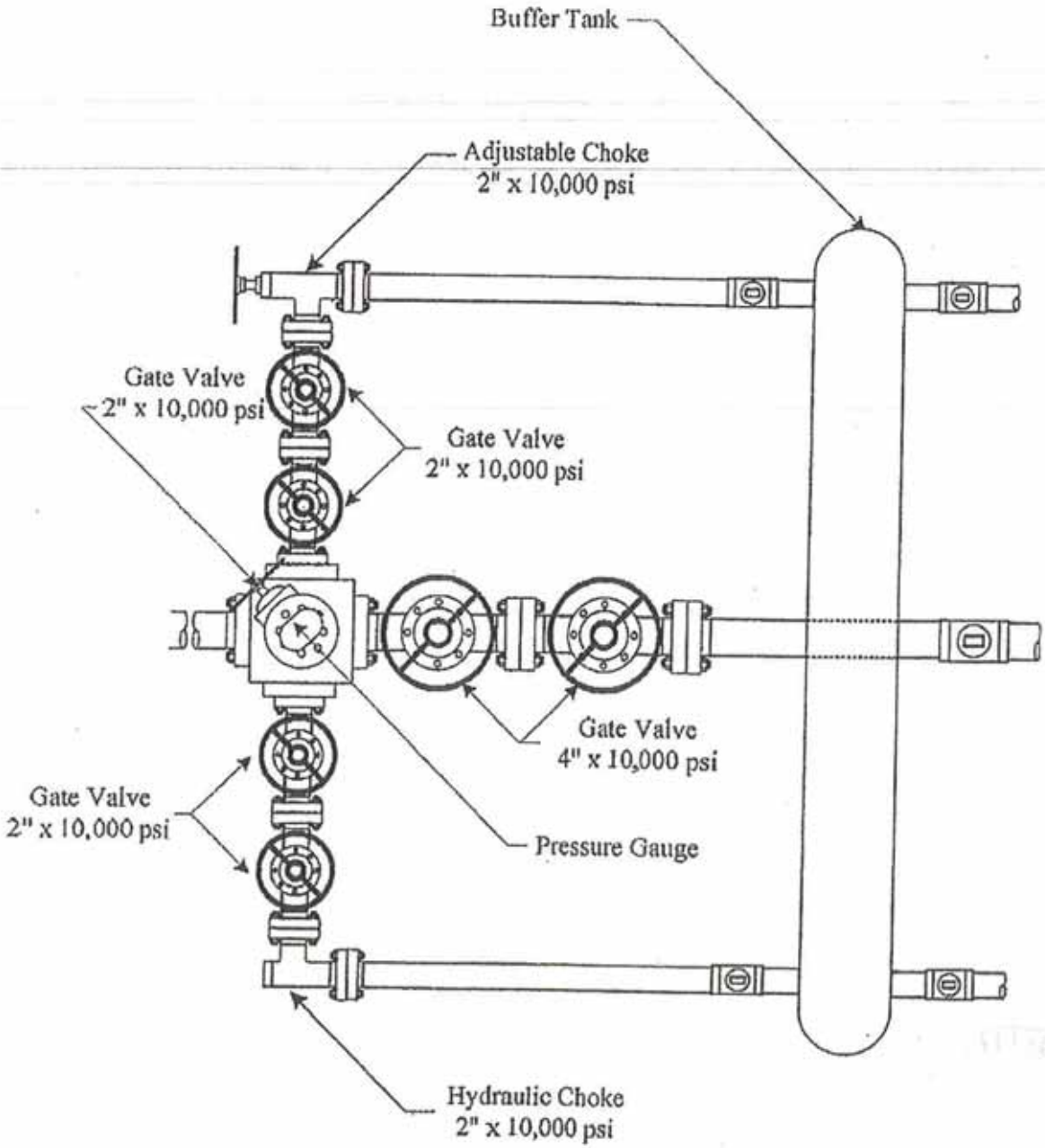

Attachment #6 - Temporary Abandonment Wellhead

TUBULAR PROGRAM
30" CONDUCTOR
16" 84# N-80 BT&C
10-3/4" 60.70# L-80 LT&C
7-5/8"& 7" TAPPERED STRING

CIMAREX

RILEY RIDGE UNIT

SUBLETTE CO., WY

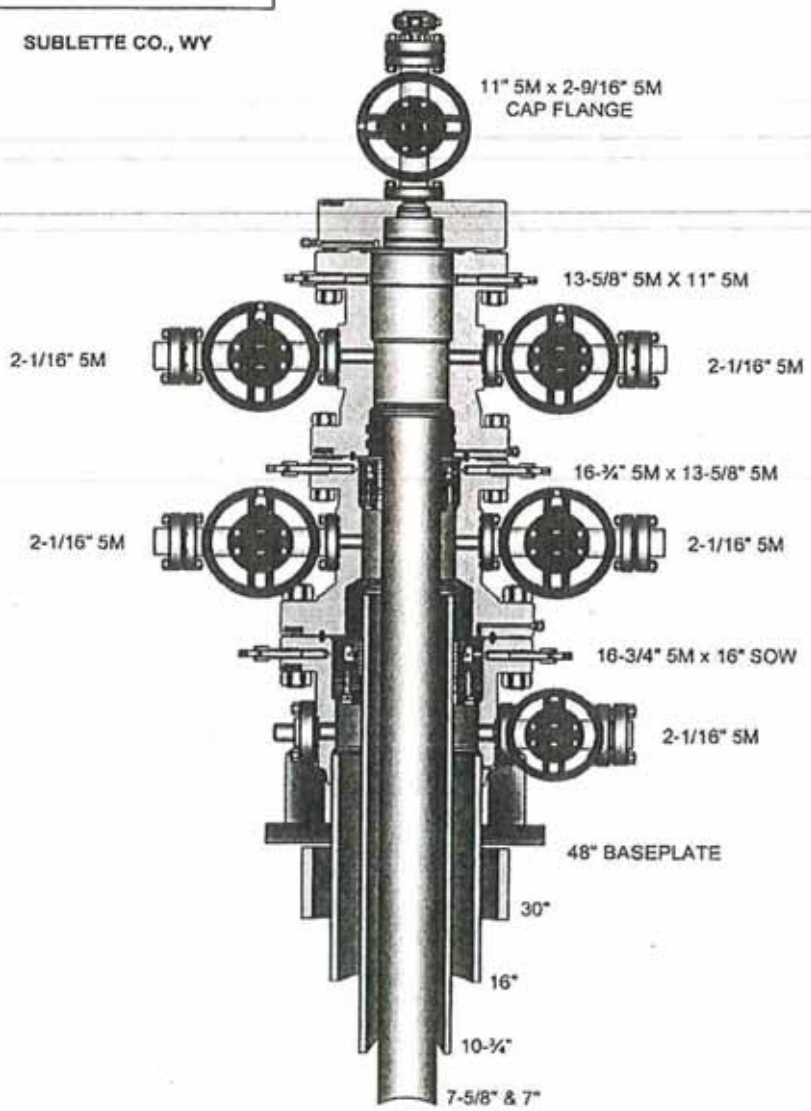

PREPARED ON 3-31-08

Attachment #7 – Manufacturer Specifications for OCTG from Grant Prideco – TCA Mill

TCA SEAMLESS OIL COUNTRY

API, PROPRIETARY, AND PREMIUM
TECHNICAL DATA: 5" - 16-1/8" OD

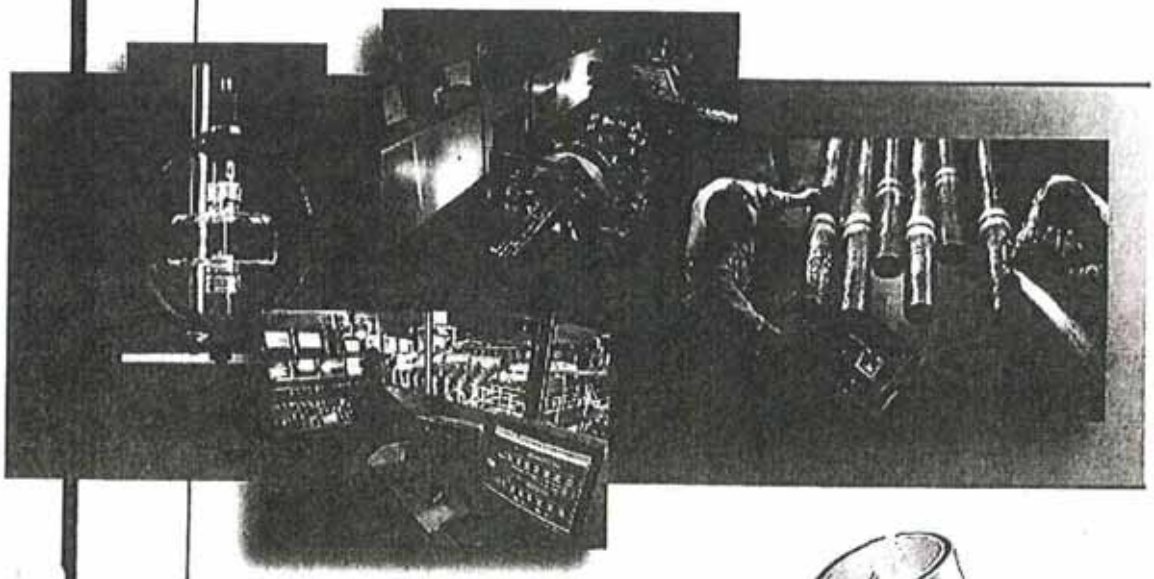

GRANTPRIDECO

TCA | TABLE OF CONTENTS

Introduction 1

Mechanical Properties 2

Casing
- Enhanced Burst 2
- High Collapse 3
- Sour Service 3
- eXtreme™ 4
- Ultra High Strength 5
- Riser 5
- Geothermal 5

Premium Pipe Pak™ (PPP) 6

The Engineering Tool Kit™ 8

Production Process 5

Service and Support 9

Pipe Data
- Introduction 16
- 5.000" Pipe O.D. 17
- 5.500" Pipe O.D. 25
- 6.625" Pipe O.D. 33
- 7.000" Pipe O.D. 41
- 7.625" Pipe O.D. 53
- 7.750" Pipe O.D. 65
- 8.625" Pipe O.D. 68
- 9.625" Pipe O.D. 75
- 9.875" Pipe O.D. 82
- 10.750" Pipe O.D. 84
- 11.750" Pipe O.D. 95
- 11.875" Pipe O.D. 100
- 13.375" Pipe O.D. 101
- 13.500" Pipe O.D. 107
- 13.625" Pipe O.D. 102
- 16.000" Pipe O.D. 109
- 16.125" Pipe O.D. 113

Locations 116

16" PIPE DATA

Pipe O.D. (in)	Nominal Weight (lb/ft)	Plain End Weight (lb/ft)	Wall Thickness (in)	Inside Diameter (in)	API Standard Drift Diameter (in)	Alternate Drift Diameter (in)
16.000	84.00	82.05	0.495	15.010	14.823	-

Product Grade	Plain End Collapse Resistance Minimum PSI [1]	Plain End Body Yield Strength (1000 lb) [2]	Plain End Internal Yield Pressure Minimum PSI [3]	Round Thread Joint Strength (1000 lb) [4]	Round Thread Internal Yield Pressure Minimum PSI [5]	Buttress Thread Joint Strength (1000 lb) [6]	Buttress Thread Internal Yield Pressure Minimum PSI [7]	ST-L Joint Strength (1000 lb) [8]	ANJO Joint Strength (1000 lb) [8]	TC-II Joint Strength (1000 lb) [8]
N-80	1480	1929	4330	1167	4330	1898	4330	-	-	-
N-80 HC	1850	1929	4330	1167	4330	1898	4330	-	-	-
L-80	1480	1929	4330	1156	4330	1861	4330	-	-	-
L-80 E	1480	2074	4660	1225	4660	1948	4660	-	-	-
L-80 HC	1840	1929	4330	1156	4330	1861	4330	-	-	-
L-80 eXtreme	1840	2074	4660	1225	4660	1948	4660	-	-	-
C-90	1480	2170	4870	1284	4870	2043	4870	-	-	-
C-90 HC	1850	2170	4870	1284	4870	2043	4870	-	-	-
T-95	1480	2291	5140	1354	5140	2153	5140	-	-	-
T-95 E	1480	2411	5410	1412	5410	2225	5410	-	-	-
T-95 HC	1860	2291	5140	1354	5140	2153	5140	-	-	-
T-95 eXtreme	1860	2411	5410	1412	5410	2225	5410	-	-	-
C-95	1480	2291	5140	1354	5140	2153	5140	-	-	-
C-95 E	1480	2411	5410	1412	5410	2225	5410	-	-	-
C-95 HC	1860	2291	5140	1354	5140	2153	5140	-	-	-
C-95 eXtreme	1860	2411	5410	1412	5410	2225	5410	-	-	-
C-110	1480	2652	5960	1564	5960	2481	5960	-	-	-
C-110 HC	1860	2652	5960	1564	5960	2481	5960	-	-	-
P-110	1480	2652	5960	1575	5960	2518	5960	-	-	-
P-110 E	1480	3014	6770	1762	6770	2772	6770	-	-	-
P-110 HC	1870	2652	5960	1575	5960	2518	5960	-	-	-
P-110 eXtreme	1870	3014	6770	1762	6770	2772	6770	-	-	-
Q-125	1480	3014	6770	1773	6770	2809	6770	-	-	-
Q-125 E	1480	3255	7310	1902	7310	2991	7310	-	-	-
Q-125 HC	1880	3014	6770	1773	6770	2809	6770	-	-	-
Q-125 eXtreme	1880	3255	7310	1902	7310	2991	7310	-	-	-
TCA-140	1480	3376	7580	1983	7580	3138	7580	-	-	-
TCA-150	1480	3617	8120	2123	8120	3356	8120	-	-	-
TCA-80 GS	1480	1929	4330	1167	4330	1898	4330	-	-	-
TCA-80 GSS	1480	1929	4330	1156	4330	1861	4330	-	-	-
TCA-90 GSS	1480	2170	4870	1307	4870	2117	4870	-	-	-
TCA-95 GSS	1480	2291	5140	1354	5140	2153	5140	-	-	-

While every effort has been made to ensure the accuracy of the data in these tables, this material is presented as a reference guide only. The technical information contained in these pages should not be construed as a recommendation. Grant Prideco cannot assume responsibility for the results obtained through the use of this material. No expressed or implied warranty is intended.

TCA PIPE DATA

Revised 10-3/4"

Pipe O.D. (in)	Nominal Weight (lb/ft)	Plain End Weight (lb/ft)	Wall Thickness (in)	Inside Diameter (in)	API Standard Drift Diameter (in)	Alternate Drift Diameter (in)
10.750	60.70	59.45	0.545	9.660	9.504	-

Product Grade	Plain End Collapse Resistance Minimum PSI [1]	Plain End Body Yield Strength (1000 lb) [2]	Plain End Internal Yield Pressure Minimum PSI [3]	Round Thread Joint Strength (1000 lb) [4]	Round Thread Internal Yield Pressure Minimum PSI [5]	Buttress Thread Joint Strength (1000 lb) [6]	Buttress Thread Internal Yield Pressure Minimum PSI [7]	ST-L Joint Strength (1000 lb) [8]	ANJO Joint Strength (1000 lb) [8]	TC-II Joint Strength (1000 lb) [8]
N-80	5160	1398	7100	996	7100	1473	7100	974	998	1398
N-80 HC	6950	1398	7100	996	7100	1473	7100	974	998	1398
L-80	5160	1398	7100	983	7100	1428	7100	974	998	1398
L-80 L	5160	1503	7630	1039	7630	1470	7630	1047	1073	1503
L-80 HC	6590	1398	7100	983	7100	1428	7100	974	998	1398
L-80 eXtreme	6590	1503	7630	1039	7630	1470	7630	1047	1073	1503
C-90	5460	1573	7980	1089	7980	1544	7980	1096	1123	1573
C-90 HC	6950	1573	7980	1089	7980	1544	7980	1096	1123	1573
T-95	5590	1660	8430	1148	8430	1625	8430	1157	1185	1660
T-95 E	5590	1747	8870	1195	8870	1660	8870	1218	1248	1747
T-95 HC	7110	1660	8430	1148	8430	1625	8430	1157	1185	1660
T-95 eXtreme	7110	1747	8870	1195	8870	1660	8870	1218	1248	1747
C-95	5590	1660	8430	1148	8430	1625	8430	1157	1185	1660
C-95 E	5590	1747	8870	1195	8870	1660	8870	1218	1248	1747
C-95 HC	7110	1660	8430	1148	8430	1625	8430	1157	1185	1660
C-95 eXtreme	7110	1747	8870	1195	8870	1660	8870	1218	1248	1747
C-110	5880	1922	9760	1325	9760	1867	9760	1339	1372	1922
C-110 HC	7390	1922	9760	1325	9760	1867	9760	1339	1372	1922
P-110	5880	1922	9760	1337	9760	1912	9760	1339	1372	1922
P-110 E	5880	2184	11090	1489	11090	2064	11090	1522	1560	2184
P-110 HC	7700	1922	9760	1337	9760	1912	9760	1339	1372	1922
P-110 eXtreme	7700	2184	11090	1489	11090	2064	11090	1522	1560	2184
Q-125	6070	2184	11090	1502	11090	2109	11090	1522	1560	2184
Q-125 E	6070	2359	11980	1608	11980	2225	11980	1644	1684	2359
Q-125 HC	7840	2184	11090	1502	11090	2109	11090	1522	1560	2184
Q-125 eXtreme	7840	2359	11980	1608	11980	2225	11980	1644	1684	2359
TCA-140	6390	2446	12420	1679	12420	2351	12420	1705	1747	2446
TCA-150	6550	2621	13310	1797	13310	2513	13310	1826	1872	2621
TCA-80 GS	5160	1398	7100	996	7100	1473	7100	974	998	1398
TCA-80 GSS	5160	1398	7100	983	7100	1428	7100	974	998	1398
TCA-90 GSS	5460	1573	7980	1114	7980	1635	7980	1096	1123	1573
TCA-95 GSS	5590	1660	8430	1148	8430	1625	8430	1157	1185	1660

While every effort has been made to ensure the accuracy of the data in these tables, this material is presented as a reference guide only. The technical information contained in these pages should not be construed as a recommendation. Grant Prideco cannot assume responsibility for the results obtained through the use of this material. No implied warranty is intended.

7-5/8" continued

PIPE DATA

Pipe O.D. (in)	Nominal Weight (lb/ft)	Plain End Weight (lb/ft)	Wall Thickness (in)	Inside Diameter (in)	API Standard Drift Diameter (in)	Alternate Drift Diameter (in)
7.625	52.80	52.62	0.712	6.201	6.076	-

Product Grade	Plain End Collapse Resistance Minimum PSI [1]	Plain End Body Yield Strength (1000 lb) [2]	Plain End Internal Yield Pressure Minimum PSI [3]	Round Thread Joint Strength (1000 lb) [4]	Round Thread Internal Yield Pressure Minimum PSI [5]	Buttress Thread Joint Strength (1000 lb) [6]	Buttress Thread Internal Yield Pressure Minimum PSI [7]	ST-L Joint Strength (1000 lb) [8]	ANJO Joint Strength (1000 lb) [9]	TC-II Joint Strength (1000 lb) [4]
N-80	13540	1237	13070	1157	10500	1239	9790	737	1011	-
N-80 HC	16280	1237	13070	1157	10500	1239	9790	737	1011	-
L-80	13540	1237	13070	1139	10500	1177	9790	737	1011	-
L-80 E	13540	1330	14050	1199	11280	1177	10530	793	1086	-
L-80 HC	14790	1237	13070	1139	10500	1177	9790	737	1011	-
L-80 eXtreme	14790	1330	14050	1199	11280	1177	10530	793	1086	-
C-90	15240	1392	14710	1257	11810	1239	11020	830	1137	-
C-90 HC	16280	1392	14710	1257	11810	1239	11020	830	1137	-
T-95	16080	1469	15520	1324	12460	1301	11630	876	1200	-
T-95 E	16080	1546	16340	1374	13120	1301	12240	922	1263	-
T-95 HC	17110	1469	15520	1324	12460	1301	11630	876	1200	-
T-95 eXtreme	17110	1546	16340	1374	13120	1301	12240	922	1263	-
C-95	16080	1469	15520	1324	12460	1301	11630	876	1200	-
C-95 E	16080	1546	16340	1374	13120	1301	12240	922	1263	-
C-95 HC	17110	1469	15520	1324	12460	1301	11630	876	1200	-
C-95 eXtreme	17110	1546	16340	1374	13120	1301	12240	922	1263	-
C-110	18620	1701	17980	1528	14430	1487	13460	1014	1390	-
C-110 HC	18740	1701	17980	1528	14430	1487	13460	1014	1390	-
P-110	18620	1701	17980	1546	14430	1549	13460	1014	1390	-
P-110 E	18620	1933	20430	1701	16400	1611	15300	1152	1579	-
P-110 HC	21160	1701	17980	1546	14430	1549	13460	1014	1390	-
P-110 eXtreme	21160	1933	20430	1701	16400	1611	15300	1152	1579	-
Q-125	21160	1933	20430	1731	16400	1673	15300	1152	1579	-
Q-125 E	21160	2088	22060	1832	17710	1735	16530	1244	1705	-
Q-125 HC	22740	1933	20430	1731	16400	1673	15300	1152	1579	-
Q-125 eXtreme	22740	2088	22060	1832	17710	1735	16530	1244	1705	-
TCA-140	23700	2165	22860	1935	18370	1858	17140	1291	1768	-
TCA-150	25400	2319	24510	2070	19680	1982	18360	1383	1895	-
TCA-80 GS	13540	1237	13070	1157	10500	1239	9790	737	1011	-
TCA-80 GSS	13540	1237	13070	1139	10500	1177	9790	737	1011	-
TCA-90 GSS	15240	1392	14710	1293	11810	1363	11020	830	1137	-
TCA-95 GSS	16080	1469	15520	1324	12460	1301	11630	876	1200	-

While every effort has been made to ensure the accuracy of the data on these tables, this material is presented as a reference guide only. The technical information contained in these pages should not be construed as a recommendation. Grant Prideco cannot assume responsibility for the results obtained through the use of this material by expressed or implied warranty is excluded.

7-5/8"

Pipe O.D. (in)	Nominal Weight (lb/ft)	Plain End Weight (lb/ft)	Wall Thickness (in)	Inside Diameter (in)	API Standard Drift Diameter (in)	Alternate Drift Diameter (in)
7.625	39.00	38.08	0.500	6.625	6.500	-

Product Grade	Plain End Collapse Resistance Minimum PSI [1]	Plain End Body Yield Strength (1000 lb) [2]	Plain End Internal Yield Pressure Minimum PSI [3]	Round Thread Joint Strength (1000 lb) [4]	Round Thread Internal Yield Pressure Minimum PSI [5]	Buttress Thread Joint Strength (1000 lb) [6]	Buttress Thread Internal Yield Pressure Minimum PSI [7]	ST-L Joint Strength (1000 lb) [8]	ANJO Joint Strength (1000 lb) [8]	TC-II Joint Strength (1000 lb) [8]
N-80	8820	895	9180	798	9180	981	9180	571	627	895
N-80 HC	10650	895	9180	798	9180	981	9180	571	627	895
L-80	8820	895	9180	786	9180	945	9180	571	627	895
L-80 E	8820	963	9870	827	9870	964	9870	614	674	963
L-80 HC	9770	895	9180	786	9180	945	9180	571	627	895
L-80 eXtreme	9770	963	9870	827	9870	964	9870	614	674	963
C-90	9620	1007	10330	867	10330	1013	10330	642	705	1007
C-90 HC	10650	1007	10330	867	10330	1013	10330	642	705	1007
T-95	10000	1063	10900	914	10900	1065	10900	678	744	1063
T-95 E	10000	1119	11480	948	11480	1081	11480	714	784	1119
T-95 HC	11120	1063	10900	914	10900	1065	10900	678	744	1063
T-95 eXtreme	11120	1119	11480	948	11480	1081	11480	714	784	1119
C-95	10000	1063	10900	914	10900	1065	10900	678	744	1063
C-95 E	10000	1119	11480	948	11480	1081	11480	714	784	1119
C-95 HC	11120	1063	10900	914	10900	1065	10900	678	744	1063
C-95 eXtreme	11120	1119	11480	948	11480	1081	11480	714	784	1119
C-110	11080	1231	12620	1054	12620	1222	12620	785	862	1231
C-110 HC	12010	1231	12620	1054	12620	1222	12620	785	862	1231
P-110	11080	1231	12620	1066	12620	1258	12620	785	862	1231
P-110 E	11080	1399	14340	1173	14340	1343	14340	892	979	1399
P-110 HC	13210	1231	12620	1066	12620	1258	12620	785	862	1231
P-110 eXtreme	13210	1399	14340	1173	14340	1343	14340	892	979	1399
Q-125	12060	1399	14340	1194	14340	1379	14340	892	979	1399
Q-125 E	12060	1511	15490	1264	15490	1447	15490	963	1058	1511
Q-125 HC	13920	1399	14340	1194	14340	1379	14340	892	979	1399
Q-125 eXtreme	13920	1511	15490	1264	15490	1447	15490	963	1058	1511
TCA-140	12930	1567	16070	1335	16070	1536	16070	999	1097	1567
TCA-150	13440	1679	17210	1428	17210	1640	17210	1070	1175	1679
TCA-80 GS	8820	895	9180	798	9180	981	9180	571	627	895
TCA-80 GSS	8820	895	9180	786	9180	945	9180	571	627	895
TCA-90 GSS	9620	1007	10330	892	10330	1085	10330	642	705	1007
TCA-95 GSS	10000	1063	10900	914	10900	1065	10900	678	744	1063

While every effort has been made to ensure the accuracy of the data in these tables, this material is presented as a reference guide only. The technical information contained in these pages should not be construed as a recommendation. Grant Prideco cannot assume responsibility for the results attained through the use of this material. No expressed or implied warranty is extended.

Pipe O.D. (in)	Nominal Weight (lb/ft)	Plain End Weight (lb/ft)	Wall Thickness (in)	Inside Diameter (in)	API Standard Drift Diameter (in)	Alternate Drift Diameter (in)
7.000	35.00	34.61	0.498	6.004	5.879	-

Product Grade	Plain End Collapse Resistance Minimum PSI [1]	Plain End Body Yield Strength (1000 lb) [2]	Plain End Internal Yield Pressure Minimum PSI [3]	Round Thread Joint Strength (1000 lb) [4]	Round Thread Internal Yield Pressure Minimum PSI [5]	Buttress Thread Joint Strength (1000 lb) [6]	Buttress Thread Internal Yield Pressure Minimum PSI [7]	ST-L Joint Strength (1000 lb) [8]	ANJO Joint Strength (1000 lb) [8]	TC-II Joint Strength (1000 lb) [8]
N-80	10180	814	9960	746	9240	876	8460	553	609	814
N-80 HC	11840	814	9960	746	9240	876	8460	553	609	814
L-80	10180	814	9960	734	9240	832	8460	553	609	814
L-80 E	10180	875	10710	772	9930	832	9100	594	654	875
L-80 HC	10820	814	9960	734	9240	832	8460	553	609	814
L-80 eXtreme	10820	875	10710	772	9930	832	9100	594	654	875
C-90	11170	916	11210	809	10400	876	9520	622	685	916
C-90 HC	11840	916	11210	809	10400	876	9520	622	685	916
T-95	11650	966	11830	853	10970	920	10050	657	723	966
T-95 E	11650	1017	12450	860	11550	920	10580	691	761	1017
T-95 HC	12390	966	11830	853	10970	920	10050	657	723	966
T-95 eXtreme	12390	1017	12450	860	11550	920	10580	691	761	1017
C-95	11650	966	11830	853	10970	920	10050	657	723	966
C-95 E	11650	1017	12450	860	11550	920	10580	691	761	1017
C-95 HC	12390	966	11830	853	10970	920	10050	657	723	966
C-95 eXtreme	12390	1017	12450	860	11550	920	10580	691	761	1017
C-110	13020	1119	13700	983	12710	1051	11630	760	837	1119
C-110 HC	13470	1119	13700	983	12710	1051	11630	760	837	1119
P-110	13020	1119	13700	996	12710	1095	11630	760	837	1119
P-110 E	13020	1272	15560	1065	14440	1139	13220	864	951	1272
P-110 HC	14980	1119	13700	996	12710	1095	11630	760	837	1119
P-110 eXtreme	14980	1272	15560	1065	14440	1139	13220	864	951	1272
Q-125	14310	1272	15560	1106	14440	1183	13220	864	951	1272
Q-125 E	14310	1373	16810	1147	15590	1227	14280	933	1027	1373
Q-125 HC	15910	1272	15560	1106	14440	1183	13220	864	951	1272
Q-125 eXtreme	15910	1373	16810	1147	15590	1227	14280	933	1027	1373
TCA-140	15490	1424	17430	1229	16170	1314	14810	968	1065	1424
TCA-150	16220	1526	18680	1310	17330	1402	15870	1037	1142	1526
TCA-80 GS	10180	814	9960	746	9240	876	8460	553	609	814
TCA-80 GSS	10180	814	9960	734	9240	832	8460	553	609	814
TCA-90 GSS	11170	916	11210	833	10400	964	9520	622	685	916
TCA-95 GSS	11650	966	11830	853	10970	920	10050	657	723	966

While every effort has been made to ensure the accuracy of the data in these tables, this material is presented as a reference guide only. The technical information contained in these pages should not be construed as a recommendation. Grant Prideco cannot assume responsibility for the results obtained through the use of this material. No express or implied warranty is intended.

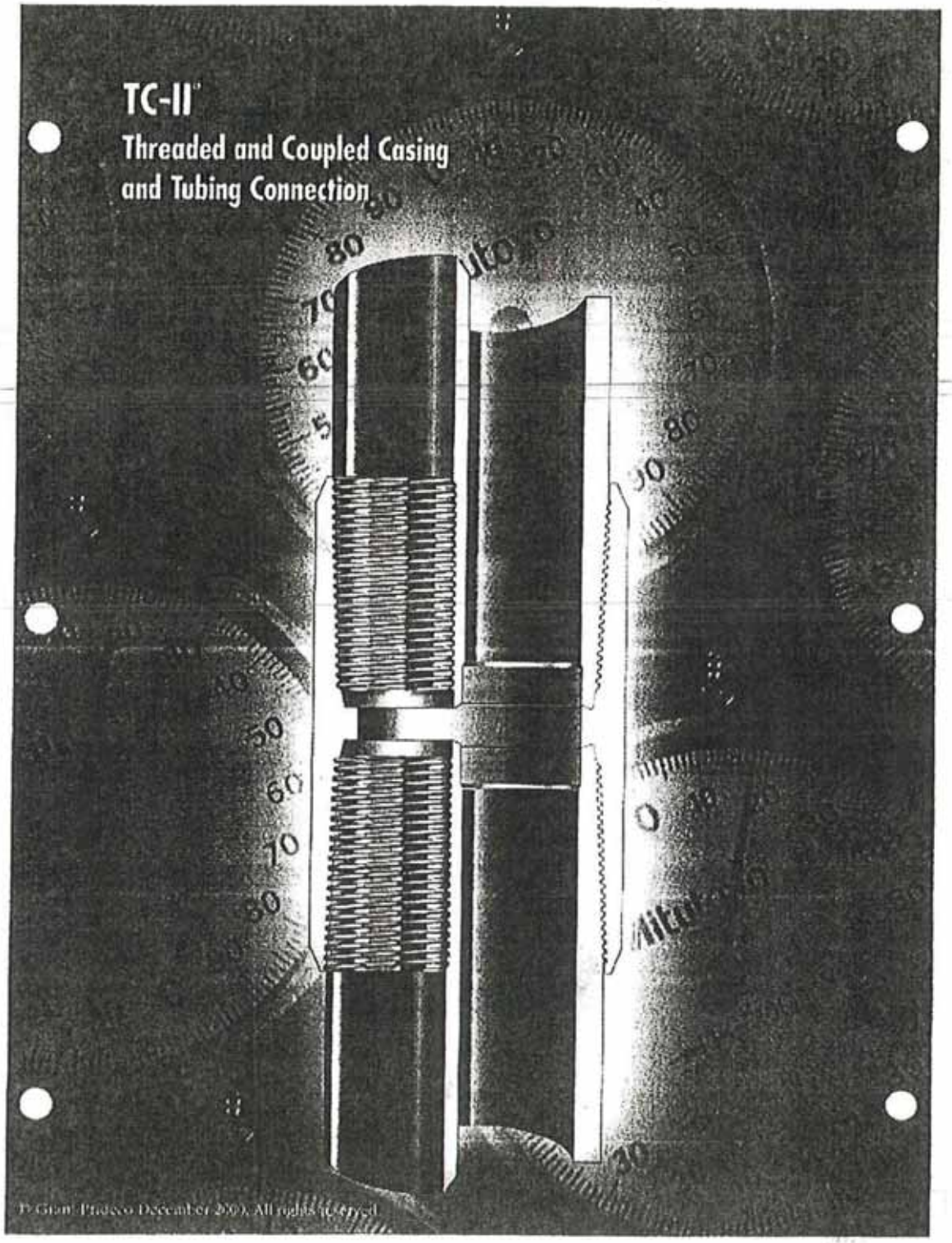
TC-II
Threaded and Coupled Casing
and Tubing Connection

TC-II®
Threaded and Coupled Tubing and Casing Connection

High Performance Premium Thread Form

- A taller, coarser, field-tough thread form.
- 25° seal/compression load flank stabs easily, reduces cross threading.
- 3° tension load flank provides optimum tensile performance without the cost of a "hooked" thread design.
- Pressure sealing provided by the tight fitting and precision toleranced thread form design.
- Flank-to-flank contact eliminates galling and prevents movement from tension/compression cycling. Compressive and tensile loads are supported by the thread body.
- Equal joint strength rating in tension and compression.
- Run-out thread design optimizes tensile efficiency.
- Thread body interference distributes thread loads more evenly.
- Torque stored in thread body interference helps prevent back off.
- Although normally produced on modern computer controlled machine tools, when necessary, the TC-II connection can be rethreaded using a manual engine lathe.

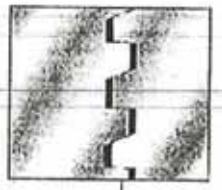

Internal Metal Seal

- Seal is generated by radial interference, reducing the effects of tensile load.
- Capable of resisting API pipe body internal pressure.
- Seal mechanism energized by internal and external pressure.
- Seal integrity not affected by multiple trips.

© Grant Prideco December 2009. All rights reserved.

TC-II®
Threaded and Coupled Tubing and Casing Connection

High Performance Premium Thread Form

- A taller, coarser, field-tough thread form.
- 25° stab/compression load flank stabs easily, reduces cross threading.
- 5° tension load flank provides optimum tensile performance without the cost of a "hooked" thread design.
- Pressure sealing provided by the tight fitting and precision toleranced thread form design.
- Flank-to-flank contact eliminates galling and prevents movement from tension/compression cycling. Compressive and tensile loads are supported by the thread body.
- Equal joint strength rating in tension and compression.
- Run-out thread design optimizes tensile efficiency.
- Thread body interference distributes thread loads more evenly.
- Torque stored in thread body interference helps prevent back off.
- Although normally produced on modern computer controlled machine tools, when necessary, the TC-II connection can be rethreaded using a manual engine lathe.

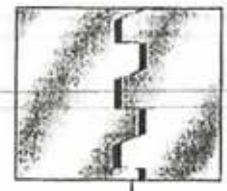

Internal Metal Seal

- Seal is generated by radial interference, reducing the effects of tensile load.
- Capable of resisting API pipe body internal pressure.
- Seal mechanism energized by internal and external pressure.
- Seal integrity not affected by multiple trips.

© Grant Prideco December 2000. All rights reserved

TC-II®
Threaded and Coupled Tubing and Casing Connection

High Performance Premium Thread Form

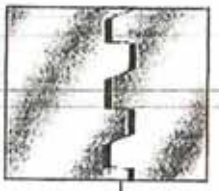

- A taller, coarser, field-tough thread form.
- 25° stab/compression load flank stabs easily, reduces cross threading.
- 5° tension load flank provides optimum tensile performance without the cost of a "hooked" thread design.
- Pressure sealing provided by the tight fitting and precision toleranced thread form design.
- Flank-to-flank contact eliminates galling and prevents movement from tension/compression cycling. Compressive and tensile loads are supported by the thread body.
- Equal joint strength rating in tension and compression.
- Run-out thread design optimizes tensile efficiency.
- Thread body interference distributes thread loads more evenly.
- Torque stored in thread body interference helps prevent back off.
- Although normally produced on modern computer controlled machine tools, when necessary, the TC-II connection can be rethreaded using a manual engine lathe.

Internal Metal Seal

- Seal is generated by radial interference, reducing the effects of tensile load.
- Capable of resisting API pipe body internal pressure.
- Seal mechanism energized by internal and external pressure.
- Seal integrity not affected by multiple trips.

© Grant Prideco December 2003. All rights reserved.

TC-II®
Threaded and Coupled Tubing and Casing Connection

High Performance Premium Thread Form

- A taller, coarser, field-tough thread form.
- 25° stab/compression load flank stabs easily, reduces cross threading.
- 3° tension load flank provides optimum tensile performance without the cost of a 'hooked' thread design.
- Pressure sealing provided by the tight fitting and precision toleranced thread form design.
- Flank-to-flank contact eliminates galling and prevents movement from tension/compression cycling. Compressive and tensile loads are supported by the thread body.
- Equal joint strength rating in tension and compression.
- Run-out thread design optimizes tensile efficiency.
- Thread body interference distributes thread loads more evenly.
- Torque stored in thread body interference helps prevent back off.
- Although normally produced on modern computer controlled machine tools, when necessary, the TC-II connection can be rethreaded using a manual engine lathe.

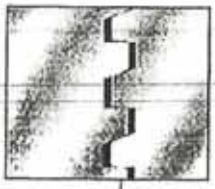

Internal Metal Seal

- Seal is generated by radial interference, reducing the effects of tensile load.
- Capable of resisting API pipe body internal pressure.
- Seal mechanism energized by internal and external pressure.
- Seal integrity not affected by multiple trips.

© Grant Prideco December 2000. All rights reserved

TC-II® Tubing and Casing Connection Data

Load Data

L-80/N-80		C-90		C-95/S-95/HC-95		P-110		Q-125		
Tensile and Compressive Joint Strength	Reference String Length DF = 1.0	Tensile and Compressive Joint Strength	Reference String Length DF = 1.0	Tensile and Compressive Joint Strength	Reference String Length DF = 1.0	Tensile and Compressive Joint Strength	Reference String Length DF = 1.0	Tensile and Compressive Joint Strength	Reference String Length DF = 1.0	Size OD
1000 lbs	ft	1000 lbs	ft	1000 lbs	ft	1000 lbs	ft	1000 lbs	ft	in.
104	14180	117	15950	124	16930	145	19490	161	22150	2-3/8
118	14480	135	16250	140	17200	162	19910	183	22630	
135	14900	152	16410	161	17350	185	20060	212	22800	
145	14160	163	15930	172	16810	199	19470	227	22120	2-7/8
180	14630	201	16460	214	17540	249	20120	282	22860	
199	14140	224	16250	236	17150	273	19860	310	22500	
178	14470	201	16290	214	17180	245	19500	279	22040	3-1/2
207	14060	235	15980	246	16720	285	19360	324	22000	
235	14290	262	16080	277	16970	321	19650	365	22330	
295	14490	331	16310	350	17210	405	19930	460	22650	
214	14100	241	15870	255	16750	295	19300	335	22040	4
246	14130	277	15980	292	16760	338	19410	385	22190	
304	14620	342	16400	361	17380	419	20120	476	22870	
366	14690	409	16430	431	17340	475	20090	548	22830	
241	14450	271	16120	286	17020	331	19700	376	22390	4-1/2
267	14390	300	16100	317	17000	367	19700	417	22380	
298	14320	324	15980	342	16770	396	19480	456	22060	
307	14210	345	15990	364	16870	421	19590	475	22200	
353	14590	397	16480	419	17380	485	20070	551	22800	
350	16670	394	18760	416	19810	481	22900	547	26050	5
422	16750	475	18850	501	19880	580	23020	659	26150	
471	16570	530	18650	559	19670	647	22770	736	25900	
486	16600	546	18750	577	19810	668	22940	759	26060	
501	16720	564	18850	595	19860	689	23000	783	26130	
543	16720	611	18819	645	19860	747	23000	849	26140	
566	16750	636	18850	672	19920	778	23060	884	26200	
361	16540	406	18710	429	19770	497	22900	564	25950	5-1/2
397	16680	447	18780	471	19750	546	22940	620	26050	
456	16640	525	18750	554	19750	641	22900	729	26040	
530	16560	597	18540	630	19570	729	22640	829	25750	
603	16510	678	18570	714	19620	826	22600	939	25600	
628	16740	707	18840	746	19880	864	23050	982	26170	
499	16390	516	18450	545	19460	631	22540	717	25610	6-5/8
542	16470	567	18570	620	19500	718	22130	816	25120	
555	16520	628	18570	659	19610	763	22710	867	25800	
651	16610	732	18650	773	19720	895	22830	1017	25940	
672	16550	756	18620	798	19650	925	22780	1051	25900	
751	16580	826	18140	872	19460	1010	22540	1147	25600	
805	16130	905	18470	950	19510	1107	22590	1258	25670	
532	16520	599	18600	632	19550	732	22730	832	25440	7
601	16590	679	18650	717	19700	830	22800	944	25930	
676	16650	760	18720	803	19780	929	22840	1056	26010	
743	16650	830	18750	885	19750	1025	22880	1165	26000	
814	16610	916	18600	966	19710	1119	22840	1272	25960	
877	16490	985	18550	1041	19670	1206	22670	1370	25750	
950	16550	1069	18620	1129	19650	1307	22770	1485	25870	

See page 23 for notes to this data table.
Joint strengths are based on the pipe body yield strength.

© Grant Prideco December 2008. All rights reserved.

TC-II® Tubing and Casing Connection Data

Pipe Data						Connection Data			Load Data	
									E-55	
Size OD	Nominal Weight	Wall Thickness	Nominal ID	API Drift Diameter	Nominal Pipe Body Area	Coupling Nominal OD	Connection Nominal ID	Makeup Loss	Tensile and Compressive Joint Strength	Reference String Length DF = 1.0
in.	lb/ft	in.	in.	in.	in.²	in.	in.	in.	1000 lbs	ft
7-5/8	26.4	0.328	6.969	6.844	7.519	8.100	6.844 **	5.31	411	11800
	29.7	0.375	6.875	6.750	8.541	8.180	6.850 **	5.30	470	11500
	33.7	0.430	6.765	6.640	9.720	8.277	6.862	5.30	535	11510
	35.8	0.465	6.695	6.570	10.460	8.331	6.881	5.30	575	11470
	39.0	0.500	6.625	6.500	11.192	8.380	6.740	5.30	616	11280
	42.8	0.562	6.501	6.376	12.470	8.487	6.631	5.30	686	11450
	47.1	0.625	6.375	6.250	13.744	8.582	6.521	5.30	756	11460
7-3/4	46.1	0.595	6.560	6.500	13.574	8.668	6.608	5.37	736	11400
	48.0	0.625	6.500	6.375	13.990	8.705	6.619	5.37	769	11440
	49.0	0.640	6.470	6.345	14.205	8.724	6.619	5.37	786	11460
8-5/8	28.0	0.304	8.017	7.892	7.947	9.063	7.908 **	5.03	437	11150
	32.0	0.352	7.921	7.875	9.149	9.107	7.892 **	5.03	505	11250
	36.0	0.400	7.825	7.700	10.336	9.250	7.911	5.03	569	11270
	40.0	0.450	7.725	7.625	11.557	9.333	7.825	5.03	636	11360
	44.0	0.500	7.625	7.500	12.763	9.419	7.750	5.03	702	11400
	49.0	0.557	7.511	7.396	14.128	9.507	7.636	5.03	776	11510
9-5/8	36.0	0.352	8.921	8.750	10.254	10.160	8.888 **	5.23	564	11390
	40.0	0.395	8.835	8.679	11.454	10.225	8.916	5.23	632	11250
	43.5	0.435	8.755	8.569	12.559	10.285	8.810	5.23	691	11350
	47.0	0.472	8.681	8.525	13.572	10.366	8.781	5.23	746	11340
	53.5	0.545	8.535	8.500	15.566	10.487	8.654	5.23	855	11420
	58.4	0.595	8.435	8.525	16.879	10.567	8.506	5.23	928	11350
9-7/8	62.8	0.625	9.625	8.499	18.102	10.800	8.763	5.37	999	11360
10-3/4	40.5	0.350	10.050	9.894	11.935	11.281	10.011 **	5.26	629	11090
	45.5	0.400	9.950	9.875	13.006	11.372	10.029	5.26	715	11220
	51.0	0.450	9.850	9.694	14.504	11.458	9.941	5.26	801	11220
	55.5	0.495	9.760	9.625	15.947	11.535	9.812	5.26	877	11290
	60.7	0.545	9.660	9.501	17.473	11.619	9.775	5.26	961	11410
	65.7	0.595	9.560	9.404	18.982	11.702	9.647	5.26	1044	11350
11-3/4	47.0	0.375	11.000	10.844	13.401	12.323	10.914 **	5.38	737	11200
	54.0	0.435	10.880	10.724	15.453	12.420	10.914	5.38	850	11250
	60.0	0.489	10.772	10.625	17.300	12.523	10.869	5.38	951	11320
	65.0	0.534	10.682	10.625	18.816	12.600	10.791	5.38	1035	11370
	71.0	0.582	10.586	10.430	20.420	12.681	10.707	5.38	1123	11300
	75.6	0.618	10.514	10.358	21.643	12.741	10.634	5.38	1189	11380
11-7/8	71.80	0.582	10.711	10.555	20.618	12.816	10.831	5.22	1136	11300
13-3/8	54.5	0.380	12.615	12.459	15.515	13.947	12.509 **	5.61	853	11180
	61.0	0.430	12.515	12.359	17.487	14.037	12.562	5.61	962	11260
	68.0	0.480	12.415	12.259	19.445	14.126	12.594	5.61	1069	11230
	72.0	0.514	12.347	12.250	20.768	14.185	12.445	5.61	1142	11330
	77.0	0.550	12.275	12.119	22.160	14.248	12.582	5.61	1219	11310
	80.7	0.580	12.215	12.059	23.311	14.299	12.539	5.61	1282	11350
	91.0	0.660	12.055	11.899	26.564	14.435	12.399	5.61	1460	11380
13-5/8	88.20	.625	12.375	12.219	25.525	14.626	12.500	5.45	1404	11370

** These connections are swaged and bored.

See page 23 for notes to this data table.
Joint strengths are based on the pipe body yield strength

 © Grant Prideco December 2000. All rights reserved.

TC-II® Tubing and Casing Connection Data

Load Data										
J-55/K-55		C-95		C-95/T-95/HC-95		P-110		Q-125		
Tensile and Compressive Joint Strength	Reference String Length DF = 1.6	Tensile and Compressive Joint Strength	Reference String Length DF = 1.6	Tensile and Compressive Joint Strength	Reference String Length DF = 1.6	Tensile and Compressive Joint Strength	Reference String Length DF = 1.6	Tensile and Compressive Joint Strength	Reference String Length DF = 1.6	Size OD
1000 lbs	ft	1000 lbs	ft	1000 lbs	ft	1000 lbs	ft	1000 lbs	ft	in.
692	16290	677	16320	734	19330	927	22560	960	25450	7-5/8
765	16430	709	16490	811	19500	990	22610	1068	25090	
778	16490	875	16550	925	19500	1066	22660	1215	25750	
857	16530	941	16770	994	19530	1151	22660	1307	26000	
895	16590	1007	16410	1063	19470	1231	22550	1399	25620	
998	16590	1122	16720	1185	19740	1372	22900	1559	26020	
1100	16600	1237	16700	1306	19410	1512	22930	1716	26050	
1070	16580	1216	16660	1271	19690	1471	22700	1672	25610	7-3/4
1119	16650	1292	16740	1329	19740	1539	22000	1748	26030	
1144	16680	1247	16760	1358	19800	1573	22950	1787	26050	
680	16220	725	16240	755	19260	874	22500	998	25550	8-5/8
732	16380	824	16370	860	19400	1006	22650	1144	25640	
827	16430	890	16450	962	19480	1137	22800	1292	25690	
925	16520	1049	16570	1098	19610	1271	22700	1445	25800	
1021	16570	1149	16650	1212	19660	1408	22750	1598	25890	
1129	16660	1271	16530	1341	19550	1553	22940	1708	25750	
820	16270	925	16510	971	19350	1124	22360	1292	25410	9-5/8
926	16390	1041	16410	1090	19450	1263	22500	1452	25570	
1005	16500	1159	16560	1193	19560	1381	22660	1571	25700	
1066	16500	1222	16570	1260	19500	1494	22660	1690	25790	
1244	16610	1399	16690	1477	19730	1719	22850	1948	25910	
1350	16510	1519	16590	1604	19620	1852	22710	2134	25810	
1455	16580	1635	16600	1725	19620	1998	22750	2279	25820	9-7/8
915	16140	1029	16150	1086	19150	1258	22190	1429	25200	10-3/4
1000	16330	1171	16360	1236	19400	1431	22460	1626	25550	
1165	16420	1311	16360	1384	19370	1602	22410	1820	25550	
1270	16420	1435	16370	1515	19500	1754	22570	1991	25650	
1398	16450	1573	16510	1660	19530	1922	22620	2186	25700	
1519	16510	1708	16570	1803	19600	2088	22700	2373	25800	
1072	16260	1206	16350	1275	19350	1479	22400	1675	25460	11-3/4
1237	16450	1392	16410	1469	19450	1701	22500	1935	25570	
1386	16480	1557	16540	1643	19500	1903	22650	2162	25740	
1505	16510	1693	16604	1788	19650	2070	22750	2352	25850	
1654	16440	1858	16450	1940	19530	2249	22600	2552	25670	
1729	16550	1945	16620	2053	19660	2377	22760	2701	25870	
1652	16430	1858	16400	1969	19510	2271	22600	2581	25660	11-7/8
1241	16250	1396	16300	1474	19320	1706	22360	1936	25410	13-3/8
1399	16380	1574	16450	1661	19450	1924	22530	2186	25600	
1556	16510	1750	16580	1847	19400	2139	22670	2431	25550	
1661	16480	1869	16540	1975	19570	2284	22650	2596	25750	
1775	16450	1994	16500	2105	19530	2438	22620	2770	25700	
1855	16510	2098	16570	2215	19610	2565	22700	2914	25790	
2109	16550	2375	16590	2505	19660	2900	22760	3295	25860	
2112	16540	2297	16600	2425	19640	2808	22740	3191	25810	13-5/8

See page 25 for notes to this data table

Joint strengths are based on the pipe body yield strength.

© Grant Prideco December 2000. All rights reserved.

H_2S Drilling Operation Plan
Riley Ridge Project
4-25-08

The Cimarex H_2S Drilling Operations Plan is prepared to safely drill the Riley Ridge wells which should encounter Hydrogen Sulfide (H_2S) gas in the Phosphoria formation at 14,212' TVD and the Madison formation at 15,380' TVD. These formations will require additional planning from a safety standpoint, including training and equipment from surface separation to flaring/burning the H_2S gas. Attachment #1 is a geologic prognosis based on the vertically drilled Riley Ridge #17-34, showing casing setting depths, potential hazards, and hazards mitigation.

This Plan has been prepared per Bureau of Land Management (BLM) Onshore Oil & Gas Order No. 6, Hydrogen Sulfide Operations, effective 1/22/1991 which establishes "the minimum acceptable standards with regard to H_2S operations. The BLM authorized officer may require additional corrective actions as "determines to be necessary to protect public health and safety, the environment, or to maintain control of a well to prevent waste of Federal mineral resources."

Riley Ridge Federal #10-14 gas analysis data is published in the BLM database and is shown in Attachment #2. The average concentrations of the major components are H_2S (4.6%), Helium (0.5%), Methane (18.4%), Nitrogen (10.1%), and CO_2 (66.3%). This analysis is representative of the Riley Ridge Madison Unit.

Using the Pasquill -Gifford derived equation, the 100 ppm ROE and 500 ppm ROE are greater than 3,000 feet for a gas rate of 120,000,000 scfd. See Attachment #3.

This H_2S Drilling Operation Plan and the Public Protection Plan is prepared for submittal with the Riley Ridge #20-14 Application for Permit to Drill (APD). Preparing and submitting these Plans are necessary for a complete APD package.

Within the Cimarex ES&H Manual (Attachment #6) under Hydrogen Sulfide (H_2S) Safety Program Part II, Training Program states that "Safety training will be provided to all personnel who may be required to work in a known or suspected H_2S environment. This training must be given prior to entering or working in an H_2S environment." The training will include annual refresher course. The training will be documented and a wallet size card will be issued at the successful completion of the course.

The Cimarex ES&H training program for H_2S identifies the following areas that must be covered:

1. Hazards, properties and characteristics of H_2S and Sulfur Dioxide (SO_2).
2. Sources of H_2S and SO_2
3. Use of H_2S detection devices
4. Description of H_2S and SO_2 detection systems used
5. Symptoms of exposure

6. Use and limitations of respiratory equipment and location
7. First Aid procedures, equipment, and location
8. Use of the "buddy system" and emergency rescue procedures
9. Wind direction awareness and routes of egress (exits)
10. Confined space and enclosed space entry procedures
11. Contingency planning

Third party vendor(s) will be selected to implement the H_2S Safety Plan on site. The vendor will be required to provide training & certification of completion to all workers. The timing of this training and certification will be coordinated with site operations. All training of current workers will be completed prior to setting the intermediate casing at 11,750' TVD. A third party supervisor will be maintained on site to support plan implementation and conduct additional training for additional workers.

Advance briefings, by visit, meeting or letters may be prepared and conducted to provide additional explanation and information on the following items per BLM Order No. 6, Section III.B.2.b.ii(b), including:
- Hazards of H_2S and SO_2;
- Necessity for an emergency action plan;
- Possible sources of H_2S and SO_2;
- Instructions for reporting a leak to the operator;
- The manner in which the public shall be notified of an emergency; and
- Steps to be taken in case of an emergency, including evacuation of any people;

The well site diagrams (Attachments #4 & #5) showing the following:

i. Drill rig orientation
ii. Prevailing wind direction
iii. Terrain of surrounding area
iv. Location of all briefing areas (designate primary briefing area)
v. Location of access road(s) (including secondary egress)
vi. Location of flare line(s) and pit(s)
vii. Location of caution and/or danger signs
viii. Location of wind direction indicators
ix. Proposed location construction and contour mapping

The final selection of vendor(s) to support the following H_2S safety equipment/systems will be made prior to the start of drill site construction:

i. Well control equipment
   - Flare line(s) and means of ignition (TBD by vendor's availability of equipment
   - Remote controlled choke - (TBD by vendor's availability of equipment
   - Flare gun/flares - (TBD by vendor's availability of equipment
   - Mud-gas separator and rotating head (TBD by vendor's availability of equipment
ii. Protective equipment for essential personnel. See Attachment #6.

- Location, type, storage and maintenance of all working and escape breathing apparatus
- Means of communication when using protective breathing apparatus

iii. H_2S detection and monitoring equipment. See Attachment #6
- H_2S sensors and associated audible/visual alarm(s)
- Portable H_2S and SO_2 monitor(s)

iv. Visual warning systems. See Attachment #4.
- Wind direction indicators will be mounted on the drill rig and have secondary wind socks on each end of the location.
- Caution/danger sign(s) and flag(s)

v. Mud program is outlined in the body of the APD.
- Mud system and additives
- Mud degassing system

vi. Metallurgy.
- Metallurgical properties of all tubular goods and well control equipment which could be exposed to H_2S (Section III.C.4.c.) are outlined in the APD.

vii. Means of communication from wellsite. Communications will be handled by Cimarex owned satellite system. Special satellite phones will be available as secondary communications.

Well Testing Plans will be developed based on the open hole logs and mud log. The Detail Completion/Testing Plan will be prepared and submitted under a sundry notice for approval.

Other Important Items
Plans and Reports

a. The H_2S Drilling Operations Plan shall be reviewed by Cimarex on an annual basis and a copy of any necessary revisions shall be submitted to the BLM authorized officer upon request within 20 to 40 days.

b. Any release of a potentially hazardous volume of H_2S shall be reported to the BLM authorized officer as soon as practicable, but no later than 24 hours following identification of the release.

Attachment #1
Geologic Formations at Riley Ridge

Riley Ridge #17-34

Vertical well on existing pad drilled to 16,336' MD/16,333' TVD with drift 172.5' South

Spud	TD Date	TD Depth	Lat.	Long.	Elevation	RKB
9/12/81	3/18/82	16,370	42.4495	-110.444	8,828	8,851

	Zone	TVD	Sub Sea	
Tertiary				
	Mesaverde	2532	6,319	Possible loss zone

Set 16" 84# N-80 BTC for Surface Casing at 2,600' TVD with cement to surface

Upper Cretaceous				
	Hilliard	3,838	5,013	
	Frontier	7,229	1,622	Possible pressure
		8,000		Begin testing for bacteria in mud at
Lower Cretaceous				
	Mowry	8,943	(92)	Hard Shale
	Muddy/Silt/Sh / SD	9,154	(303)	
	Thermopolis	9,189	(338)	
	Dakota	9,308	(457)	Sand with gas show
	Gannett	9,619	(768)	pH sensitive shale
Jurassic		10,000	Begin adding 4ppb LCM and 2-5% mineral oil or Diesel	
	Stump	10,492	(1,641)	Possible Anhydrite- keep pH at 10.5
	Preuss	10,544	(1,693)	Possible Anhydrite- keep pH at 10.5
	Twin Creek	10,744	(1,893)	Possible Anhydrite- keep pH at 10.5
				Anhydrite may cause high viscosity mud
	Gypsum Springs	11,433	(2,582)	High calcium influx
		11,450	(2,599)	Increase LCM to 12 ppb for Loss Circulation
				Trip for spiral drill collars in BHA
	Nugget	11,609	(2,758)	Might be loss zone

Set 10-3/4" 60.7# L-80 LTC at 11,750' TVD for Intermediate Casing with cement to 7,000'

				May lose mud while cementing
				Displace plug with 8.2-8.4 ppg OBM
				No LCM in OBM
Triassic				
	Ankareh	12150	(3,299)	Sand with Lime/Gyp stringers
	Thaynes	12827	(3,976)	Salt formation
	Woodside	13286	(4,437)	
	Dinwoody	14082	(5,231)	
Permian				
	Phosphoria	14212	(5,361)	First H2S shows
	Weber	14530	(5,679)	Hard sand with slow drilling
Pennsylvania				
	Amsden	14924	(6,073)	
	Darwin	15280	(6,429)	
Mississippian				
	Madison	15380	(6,529)	7.8 ppg EMW (6200 psig)
				Potential for high CO2 (70%) influx
				Potential for high H2S (5%) influx
				Subpressured & possible losses

Set 7-5/8" x 7" at 16,000' TVD Production Casing with cement into Intermediate Casing.

Verify cement design for 500' into Intermediate Casing

Devonian			
	Three Forks	16281	(7,430)
	Darby	16301	(7,450)
	TD	16370	(7,519)

Attachment #2
Riley Ridge Federal #10-14
Average Gas Analysis

BLM - AMARILLO FIELD OFFICE

QUAD H GAS CHROMATOGRAPHIC ANALYSIS

COMPANY NAME: WOLD OIL PROPERTIES
WELL NAME: RILEY RIDGE FEDERAL 10-14
DATE COLLECTED: 060924
LAB NUMBER: FS-21588
SAMPLED BY: R. KING
DATE ANALYZED: 061005
#, CO, ST, SEC
T&R: SUBLETTE WY 10 T29N R114W
API #, LAT, LONG: 49035206030051 N42.5056409° W-110.4130952°
"UNNAMED" FIELD, MADISON FORMATION, SE SW SW SPOT, 16160 ft DEEP, 15712-15762 ft DEPTH, 8555 ft KB ELEVATION, DEVONIAN-UPPER DEVONIAN AGE

Component	Average	Std. Dev.
Hydrogen	0.16	0.001
Helium	0.53	0.001
Methane	17.16	0.004
Nitrogen	7.33	0.002
Ethane	0.01	0.000
Oxygen	0.00	0.000
H2S	1.34	0.008
Argon	0.05	0.000
CO2	73.28	0.001
Propane	0.00	0.000
I-Butane	0.13	0.003
N-Butane	0.00	0.000
I-Pentane	0.00	0.000
N-Pentane	0.00	0.000
Hexanes+	0.02	0.000
Btu	188.00	0.000
Sp. Gr.	1.300	0.000

ExxonMobil Production Company, U.S. Production
LaBarge Operations, Shute Creek Laboratory, Lincoln County, WY

Product Analyst: C.F. Conroy Analysis Date: 10/29/2006

Norm%	He	Ar	N2	CH4	CO2	C2H6	H2S	COS
RUN 1	0.5196	0.0620	10.1338	18.5222	66.2339	0.0123	4.4836	0.0324
RUN 2	0.5228	0.0583	10.0951	18.4806	66.2196	0.0123	4.5791	0.0320
RUN 3	0.5202	0.0580	10.0622	18.4275	66.2789	0.0114	4.6078	0.0340
RUN 4	0.5255	0.0584	10.0652	18.4345	66.2759	0.0111	4.5987	0.0327
RUN 5	0.5242	0.0580	10.0763	18.4492	66.2010	0.0124	4.6463	0.0326
AVG. 3-5	0.523	0.059	10.068	18.437	66.252	0.012	4.617	0.033
Norm%	He	Ar	N2	CH4	CO2	C2H6	H2S	COS

Sample Information:
Wold Oil Properties
Riley Ridge Fed. 10-14
SW SW Sec. 10 T29N R114W
Sublette County, WY
High Pressure Gas Sample
10/26/06 @ 16:30
Serial # HDF4 500
From: Test Separator Meter Run
Pressure: 530 PSI
Temp: 103 F
Taken By: Pure Energy Services LTD.
307-789-4227
Wold Company Rep: Rocky Moeller 307-389-4458
Formation: Madison

RILEY RIDGE UNIT
WYW109661X
Federal No. 10-14
WYW78475
SW SW Sec. 10 T29N R114W
630' FSL 827' FWL
Sublette County, Wyoming
8323' GL 8355' KB
API #49-035-20603

12/29/80	Spud by American Quasar.
10/31/81	Completed. 24" @ 40' GL. 16" 75/84# K55 @ 2017' w/ 1900 sks. DST #1 (2nd Frontier 7695'-7820') weak blow, lost pkr seat. Rec 93' GCM. 10-3/4" 55.7/60.7# L80/SS95 @ 10,956' w/ DV @ 4948'. Cmt 1st stage w/ 4500 sks & 2nd stage w/ 2800 sks. DST #2 (Phosphoria 13,970'-14,200') misrun. 7-5/8" 39# L80/SS95 liner 10,688'-15,195' cmt w/ 865 sks. Perf 11,380'. Sqz w/ 155 sks. Drill to 15,695'. Well blew out during fishing job. Control blow out and repair rig. Tie back 7-5/8" liner to surface w/ 7-5/8" 33.7/39# L80/SS95 set @ 10,697'. Cmt w/ 1868 sks. Perf csg @ 1800' w/ 2 shots. Cmt top of tie-back w/ 500 sks. Clean out to top of fish @ 14,475'. Tite spot 13,072'-13,077'. Attempt to recover fish (2 DC=s, jar bbl, JS, BS, bit). No success. Set Baker whipstock @ 15,078'. Cut window in 7-5/8" csg. Drill new 6-1/2" hole to TD 16,220'. Set 5" 18# L80 liner 10,561'-16,217', cmt w/ 500 sks. PBTD 16,200'. Displace hole w/ inhibited water. LD DP.
8/18/87	Change of operator to Wolverine Exploration.
9/24/93	MIT csg 1000 psig OK.
8/1/95	Change of operator to Wold Oil Properties, Inc.
10/4/05	MIT 7-5/8" csg 1000 psig OK. Witnessed by BLM.
11/6/06	Identify minor csg leak 1699'-2137', not repaired. Set pkr on work string @ 15,398', test csg 2500 psig OK. Perf Madison 15,742'-62', 15,712'-22' w/ 1spf. Liven well w/ CTU & N_2. Flow test, take gas samples. Run BHP survey, wireline parted. Attempt to fish wireline & bombs unsuccessful. Chase fish to 15,698'. Set CIBP on wireline @ 15,430', capped w/ 2 sks cmt. Run TCP perforating & pressure gauge assy, set pkr @ 15,237'. Perf Madison 15,317'-37' w/ 1spf. Flow test, take gas samples. TOH w/ perf assy. Set CIBP on wireline @ 15,215' capped w/ 2 sks cmt. Test csg to 2000 psig OK. Load hole w/ 9.2# inhibited KCl.

Attachment #3
Radius of Exposure (ROE) Calculations

From BLM Onshore Order 6:

Radius of exposure means the calculation resulting from using the following Pasquill -Giffor derived equation, or by such other method(s) as may be approved by the authorized officer

1. For determining the 100 ppm radius of exposure where the H_2S concentration in the gas stream is less than 10 percent:

$$X = [\ (1.589)(H_2S\ \text{concentration})(Q)\ ]^{(0.6258)} \quad \text{or}$$

2. For determining the 500 ppm radius of exposure where the H2S concentration in the gas stream is less than 10 percent:

$$X = [\ (0.4546)(H_2S\ \text{concentration})(Q)\ ]^{(0.6258)}$$

Where:
X = radius of exposure in feet:
H_2S Concentration = decimal equivalent of the mole or volume fractions of H_2S in the gaseous mixture;
Q = maximum volume of gas determined to be available for escape in cubic feet per day (at standard condition of 14.73 psia and 60°F).

Escape rate means that the maximum volume (Q) used as the escape rate in determining the radius of exposure shall be that specified below, as applicable:

2. For gas wells, the escape rate shall be calculated by using the current daily absolute open flow rate against atmospheric pressure;
4. For a well being drilled in a developed area, the escape rate may be determined by using the offset wells completed in the interval(s) in question.

100 PPM ROE $X = [\ (1.589)(H_2S\ \text{concentration})(Q)\ ]^{(0.6258)}$

Q,scfd	40,000,000	80,000,000	120,000,000
H_2S	0.04617	0.04617	0.04617
X, feet	11,153	17,210	22,181
X, Miles	2.1	3.3	4.2

500 PPM ROE $X = [\ (0.4546)(H_2S\ \text{concentration})(Q)\ ]^{(0.6258)}$

Q,scfd	40,000,000	80,000,000	120,000,000
H_2S	0.04617	0.04617	0.04617
X, feet	5,096	7,864	10,136
X, Miles	1.0	1.5	1.9

Attachment #4
Modified Surveyor's Figure #3 – Well Site Layout Diagram

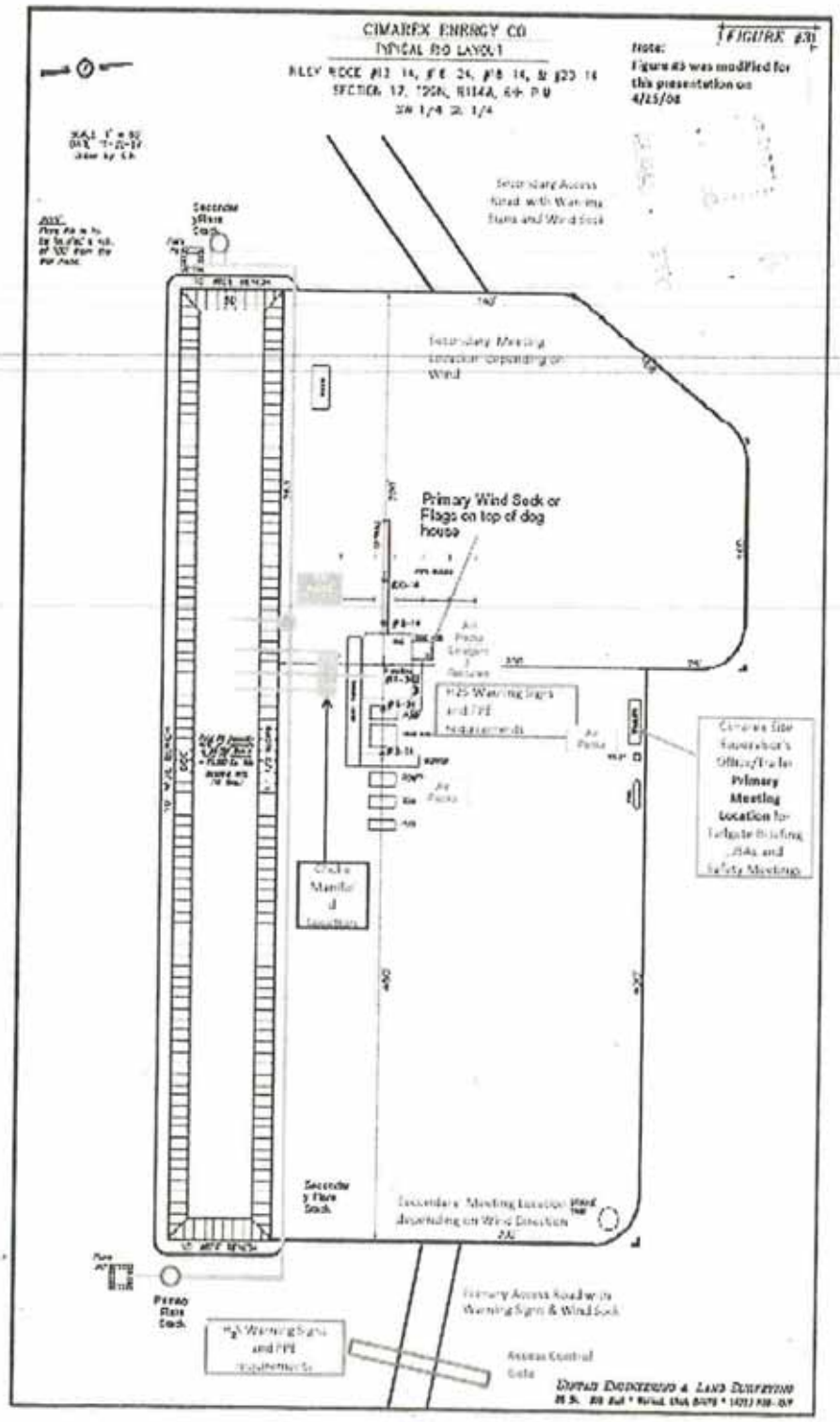

Attachment #5 – Modified Surveyor's Figure #1
Proposed Multi-Well Pad, Wind Rose 1994-1997, Weather Station Map

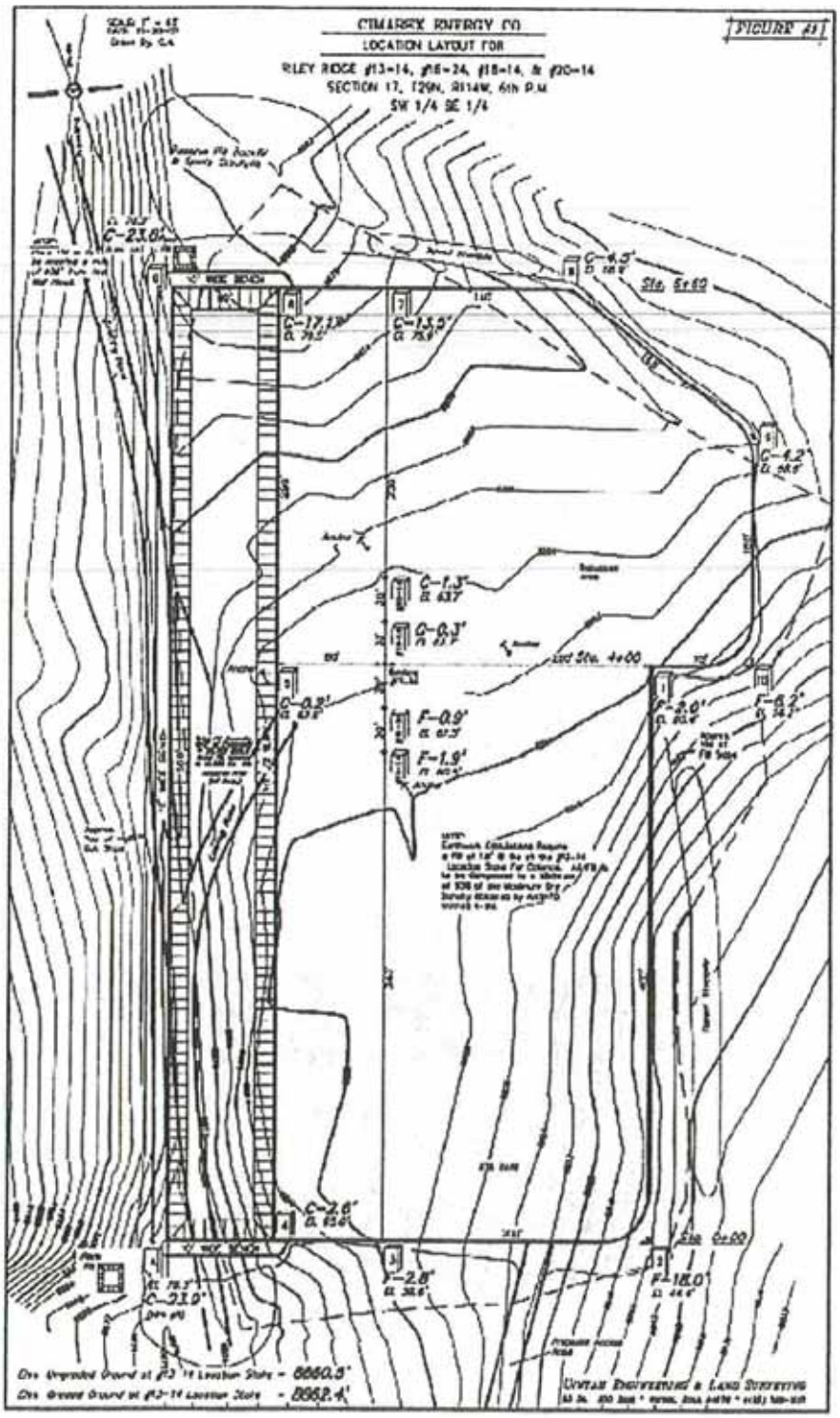

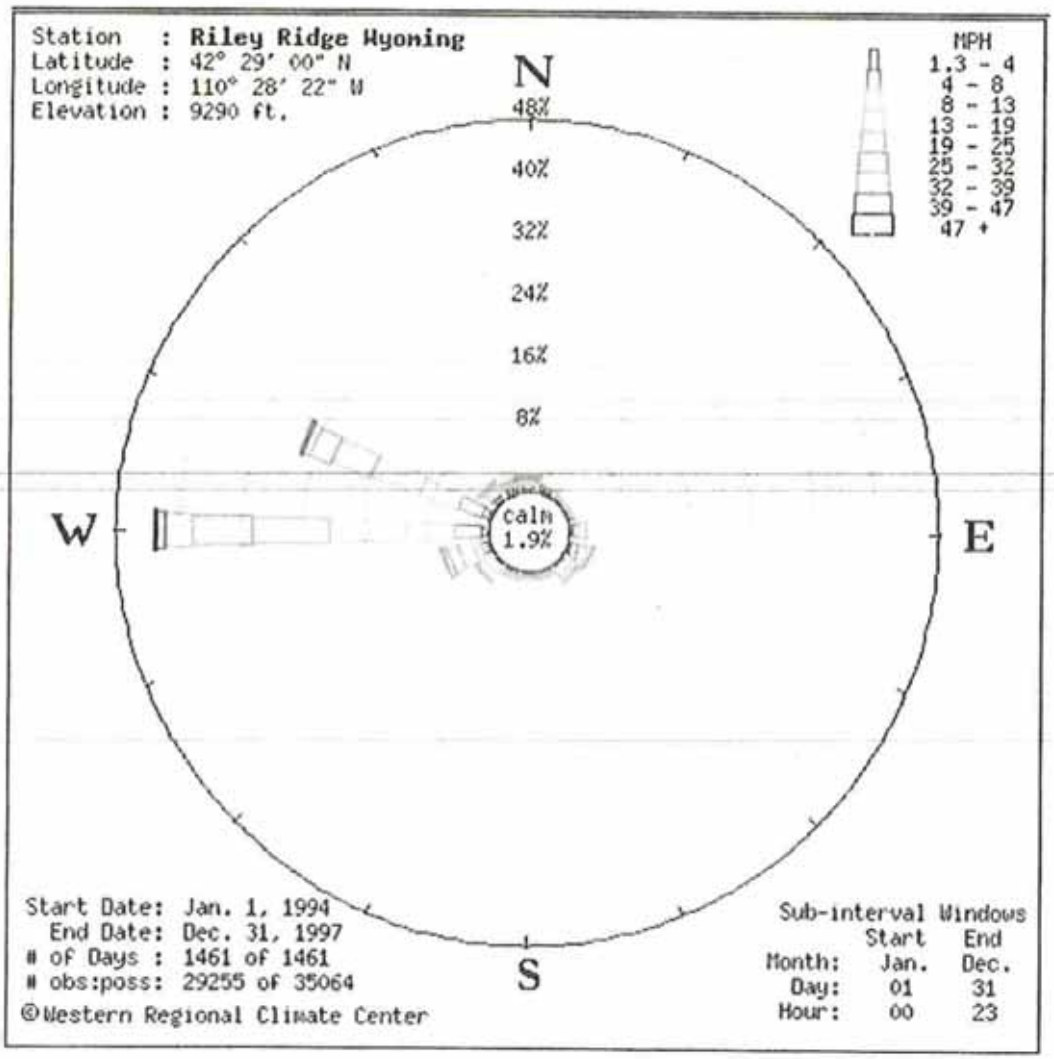

Prevailing Winds are from West to East

Weather Station is 1.9 miles from Riley Ridge #20-14
Riley Ridge #20-14 is 19.5 miles from Big Piney, WY

Attachment #6

Cimarex Environmental, Safety & Health Manual

CIMAREX

To: All Cimarex Employees

Date: October 2007

Subject: Cimarex's Environmental, Safety and Health (ES&H) Manual

Oil and Gas operations by their very nature, involve potentially significant risks. With that in mind, safety is of critical importance. It is everyone's responsibility. All employees are responsible for their individual safety performance and the prevention of accidents. It is the responsibility of each employee to comply with safety guidelines and to work in such a manner as to prevent injuries to themselves and to others.

Each employee and supervisor has the responsibility to create a climate of safety awareness, to adopt safe work habits and practices, and to observe safety guidelines. Safety and loss prevention will be part of measuring performance when considering compensation, continued employment or promotions. Again, each employee shares in the responsibility for maintaining a safe and healthful work environment.

This safety manual sets forth safety guidelines that are to be followed by all company employees. While this manual and our STOP Program will help you recognize and avoid obvious hazards, it cannot cover all situations. When in doubt, consult your immediate supervisor and/or your ES&H Department.

The provisions set forth in this manual shall apply to operations conducted by Cimarex Energy Co. and its subsidiaries. Throughout this manual Cimarex may be referred to as "Company".

Joe Albi
Executive V.P. of Operations

Dick Dinkins
V.P. of Human Resources

Jerry Nagel
V.P. of Operations

Roger Burau
V.P. of Drilling

Bob Jennings
Manager of ES&H

Cimarex Energy Co.
Revised September 2007

INTRODUCTION

This Environmental, Safety & Health (ES&H) Manual is distributed to the Cimarex field employees in an effort to develop safety and environmental awareness and thereby help prevent personal injury, damage to property and the environment, both on and off the job. It covers many situations you may encounter and provides safety principles for you to follow, but it cannot cover every situation that arises, nor can every safe practice be listed.

The Safety & Health of our employees, our contractors, and our co-workers are of the utmost importance. This manual is intended to assist you in performing your work safely. You should familiarize yourself with its content and follow the guidelines that are contained in the manual.

Safety guidelines alone cannot prevent accidents. You, as part of this work force, must develop a personal safety awareness that all accidents and injuries are preventable. This philosophy starts with you and can only be accomplished by developing and practicing safe work habits.

Federal, state, and local laws, from which much of this material was derived, are by extension, be considered a part of this manual and must be followed. It is the responsibility of each ployee to protect themselves, their fellow workers, the public, and the environment. You are urged to become familiar with all sections of this manual, refer to it frequently, and to comply with all the principles contained herein. The ES&H manual consists of five sections, these are:

I. Cimarex Guidelines
II. OSHA Procedures
III. Safe Work Practices
IV. Environmental
V. Forms

Contractors performing work on our locations are expected to comply with all health, safety and environmental laws and regulations that pertain to the work they are performing.

If you have any questions regarding this manual or the means necessary to operate safely and in an environmentally sound manner, please discuss them with your immediate supervisor or the ES&H Department.

Upon receipt of this manual, each employee shall sign an Employee Statement of Commitment form and will give it to his/her supervisor who will then forward it to the ES&H department.

Cimarex Energy Co.
Revised October 2007

EMPLOYEE
SAFETY AND ENVIRONMENTAL
GUIDELINES

Company personnel should observe the following guidelines for safe and environmentally sound operations. Failure to do so is grounds for disciplinary action up to and including termination of employment.

ENVIRONMENTAL

Any unsafe or environmentally threatening conditions or practices should be promptly reported and immediately corrected as long as the act is not Immediately Dangerous to Life and Health (IDLH). Oil, condensate, chemical, produced water, and natural gas reportable spills/leaks should be reported immediately to your supervisor. The supervisors should then follow the proper reporting procedures for making the necessary contacts and filling out the appropriate reporting forms. A copy of the spill report should be sent to your ES&H Department.

No waste should be improperly or illegally disposed of.

ACCIDENT & INJURY RECORDING PROCEDURES

All injuries, accidents, and damage to Company property should be reported immediately to your supervisor. The supervisors should then follow the proper reporting procedures, making the necessary contacts, and appropriate completion of the accident / incident reporting forms. (Refer to the section on "ACCIDENT/INCIDENT REPORTING PROCEDURES".)

Employees are responsible for exercising care and good judgment in preventing accidents.

PERSONAL PROTECTIVE EQUIPMENT (PPE)

Personnel should wear the appropriate "Personal Protective Equipment" (PPE) while performing their jobs. (Refer to the section on "PERSONAL PROTECTIVE EQUIPMENT".)

Cimarex Energy Co.
Revised October 2007

ANSI approved safety-toed footwear should be worn by personnel at all field, drilling and gas plant locations. (Refer to the section on "PERSONAL PROTECTIVE EQUIPMENT".)

Proper eye and face protection should be worn when sanding, grinding, buffing, welding, chipping, working with chemicals, and anywhere else that conditions require. (Refer to the section on "EYE AND FACE PROTECTION".)

Hearing protection should be used as required in posted areas and in other areas where there is high noise levels. (Refer to the section on "HEARING CONSERVATION PROGRAM".)

FALL PROTECTION

Employees working at a height above six feet should use fall protection equipment. (Refer to the section on "FALL PROTECTION PROGRAM".)

CONFINED SPACE

Personnel should not enter a permit required confined space until a Hazardous Work Permit has been approved by the qualified person on location and/or a Cimarex supervisor. (Refer to the section on "CONFINED SPACE ENTRY PROGRAM".)

HOT WORK

Cutting and welding operations carried out in areas where flammable vapors may be present should not be initiated until a combustible gas detector survey has been performed and a Hazardous Work Permit signed by the qualified person on location and/or a Cimarex Supervisor. (Refer to the section on "HOT WORK PROGRAM".)

GENERAL SAFETY GUIDELINES

Employees will attend scheduled safety meetings and training sessions unless prior arrangements have been made with the employee's supervisor. Your active participation in these meetings, sharing your thoughts and knowledge, could prevent injuries. Alternative arrangements for safety meeting and training re-scheduling shall be made by the supervisor and or the ES&H Department.

Each employee shall abide by all Cimarex safety and environmental guidelines as well as federal, state, and local laws while performing duties.

Develop safe work habits, attitudes and encourage safe behavior and positive attitudes in your fellow employees.

Never bypass or otherwise make inoperable any safety device or any anti-pollution device unless authorized by a supervisor. Report all safety and anti-pollution device malfunctions to your supervisor promptly and flag the device immediately to warn others of the hazard.

Cimarex Energy Co.
Revised October 2007

Smoking or open flame is prohibited within 50 feet of any oil or gas production facility or well site and elsewhere, where "NO SMOKING" signs are posted.

During inclement weather where lightning may occur, employees should avoid working on elevated structures such as tanks, tank walkways, etc.

Safety and warning signs should be posted as required and should be obeyed by all personnel.

Personal misconduct, such as horseplay, fighting or practical jokes is prohibited.

Follow proper procedures and use the proper tools and equipment in your daily work. Only tools in good condition designed for the particular job being done should be used. Any tool or device subject to bearing a load or withstanding pressure should be engineered for the purpose and purchased from a reputable manufacturer.

Protective guards on moving machinery should be in place before start-up and should not be removed while equipment is operating. Equipment should not be operated without guards in place.

High standards of good housekeeping and conduct are aids to safety and should be required of all Cimarex properties. Tools, equipment, Company vehicles and all field locations should be kept clean and orderly.

Personnel should be trained in emergency response and reporting procedures pertaining to their area of operation.

Safety equipment should be located and maintained in each Company vehicle, field office, and other areas as required.

Sleeping while on duty is prohibited, unless housing is provided on location, such as at drilling locations, and the employee is on an "on-call" status.

Possession or use of controlled substances or illegal drugs, and any paraphernalia associated with their use, intoxicating beverages, firearms, fireworks, weapons, or explosives are prohibited on any Company property.

Personnel should report to work in a fit condition to perform the duties required by their job in a safe and healthful manner. Reporting to work in an unfit condition may put you or a co-worker in danger and render you less able to respond effectively in an emergency. Driving Company vehicles under the influence of alcohol is strictly prohibited. Employees should notify their Supervisor of any medication or any physical or mental condition which could affect the safety of their work performance.

USCG approved life jackets or work vests should be worn while working on water, including operating or being transported in small boats.

Employees should use the Think Incident Free (TIF) program as key job planning tools to identify hazards and safeguards associated with tasks they are asked to perform.

Cimarex Energy Co.
Revised October 2007

Employees should participate in the STOP program and all unsafe acts and/or conditions should be reported and documented on the STOP Card.

Any employee having doubts about the safety of a job is authorized to immediately stop the work, step back, and re-evaluate the task. Only when all present are satisfied that the work is being done safely should the work resume.

Employees will be responsible and held accountable for their environmental and safety performance.

SUPERVISOR'S
(AREA SUPERINTENDENTS, SUPERVISORS & FOREMEN)
SAFETY AND ENVIRONMENTAL GUIDELINES

Every supervisor shall strive to see that all work in their area is performed in a safe manner. Supervisors are responsible for seeing that each employee receives the necessary instructions and training they need to complete any assigned task in a safe manner. It is also the responsibility of supervisors to make available to all Company personnel any personal protective equipment, tools, supplies and any other equipment they need to perform their job and to see that all equipment is used in accordance with any safety rules outlined in this manual. Itemized below are specific requirements that a supervisor should follow in order to comply with Cimarex's ES&H Manual. Supervisors should do the following:

Promote Cimarex's ES&H guidelines.

Set a good example for employees to follow.

Be aware of the hazards associated with each operation.

Enforce all safety and environmental guidelines.

Attend or conduct regular safety meetings with all employees.

Report all accidents/incidents to the ES&H Department in a timely manner by telephone, and by using properly completed forms. In coordination with the ES&H Department, investigate all serious accidents/incidents involving Cimarex employees and recommend corrective actions.

Cimarex Energy Co.
Revised October 2007

Complete and distribute any required safety and environmental reports, including proper permits for all hazardous work procedures in a timely manner.

Perform safety and environmental evaluations as frequently as required. Corrective actions should be taken and documented.

When possible, hold pre-job safety briefings when new or hazardous work is being undertaken.

Where inherent hazards exist that cannot be eliminated, familiarize the work group with the situation and develop a safe method for controlling it.

If possible, review all design and operational revisions in your area with the ES&H Department during the design and construction phase of any project to make sure they are in accordance with all approved standards and codes. More formal procedures to deal with management of change are prescribed by Process Safety Management (PSM) Standards for certain processing operations.

Contact the ES&H Department to obtain appropriate safety and environmental training for employees when there is a change in their employees' job functions or a new employee is hired.

Actively participate in the STOP and TIF programs.

Cimarex Energy Co.
Revised October 2007

COMPANY SAFETY AND ENVIRONMENTAL GUIDELINES AND GOALS

Taking reasonable steps to protect our employees, contractors, the public, and the environment are essential. Cimarex will diligently strive to provide human health and safety protection and environmental stewardship by establishing and maintaining:

Compliance programs that are intended to meet or exceed the regulatory requirements of the applicable governmental requirements.

Industrial hygiene, personal protection, and medical monitoring programs to control harmful and toxic agents and conditions affecting employee health and welfare.

Programs that will strive to provide an accident free workplace by anticipating, evaluating, and managing risks through emphasis on prevention, preparedness, and response to potential hazards.

Training that will encourage the employees to perform their jobs in a safe and environmentally responsible manner.

Necessary resources to support its safety, health, and environmental goals.

Processes to analyze and review safety & environmental programs to try and detect, eliminate or control, in advance the sources of personal injury, property damage, and harmful environmental releases in our operations.

An effective means of communication, education, and training that will enhance our health, safety, and environmental work procedures and practices.

Promote the STOP and TIF programs.

NOTE: Any exceptions to these Safety and Environmental guidelines outlined in this manual should have prior approval from the Vice President of Production, Operations or Drilling, and/or consultation with the Manager of the ES&H Department.

Cimarex Energy Co.
Revised October 2007

STOP PROGRAM

Safety Training Observation Program (STOP)

The STOP Program is a behavioral based safety program that trains "you to observe, correct, prevent, and report unsafe acts systematically." Only 4% of injuries are caused by unsafe conditions, the other 96% of all injuries are caused by unsafe acts. Therefore, most of Cimarex's Safety Training will focus on the actions of employees and contractors in an effort to prevent accidents. The remaining training will cover operating exposures and what to do in case of an accident.

Listed below are some of the basic principles that STOP and Cimarex's Safety Program are based on:

- Safety is everyone's responsibility.
- Most if not all injuries and occupational illnesses can be prevented.
- All construction and operating exposures can be reasonably safeguarded.
- Preventing injuries and incidents is good business.
- All employees, both Cimarex and contractor, have the authority to stop any work where imminent danger exists, and are expected to do so.

All employees are expected to participate in this program and the supervisors are responsible for reviewing corrective actions identified by the STOP card and for implementing as appropriate. If an action will not be implemented, the reason for this decision should be reviewed.

Cimarex Energy Co.
Revised October 2007

THINK INCIDENT FREE

Think Incident Free (TIF)

The TIF process is a tool to aid employee's efforts to work safely. The process consists of a series of questions grouped in four categories, which should be asked by each employee prior to beginning any job.

Planning

Do I understand the task and how to perform it?
Have I identified all hazards associated with the task?
What could go wrong?
How will I eliminate or minimize the hazards associated with this task?
Have I planned all job tasks?
Have I considered all safe practices/guidelines that apply to this task?
Can I work the plan safely?
Do I need help to do this work safely?
Do I need a permit?

'oper Tools and Equipment

) I have the personal protective equipment (PPE) I need?
Do I have the right tools and equipment?
Have I checked if tools/equipment are in good working condition?

Training

Am I trained to do this work?
Am I trained to use the equipment or tools required?

State of Mind

Will I give my full attention to this task?
Will I stop and redo my plan if something unforeseen happens?
Am I meeting or exceeding safety requirements for this task?

Chevrex Energy Co.
Revised October 2007

ACCIDENT AND INCIDENT INVESTIGATIONS

I. Investigations

A. Accident investigations may be required by the ES&H Department or the supervisor in charge at that location for any accidents involving:

1. Serious employee injuries, except fatal employee injuries.
2. Property damage to Company facilities only.
3. Property damage to third parties or their facilities / equipment.
4. Other valid reasons such as near miss incidents or equipment failures.
5. Near miss incidents as defined by the Process Safety Management (PSM) Standard (OSHA 1910.119(m).)

B. Accident investigations shall be conducted in accordance with Company set guidelines.

C. Documentation of investigations should be handled in accordance with Company policies and as directed by the supervisor or the ES&H Department.

II. Incident / Accident Investigation Procedures

A. The plant or field supervisor and/or the ES&H Department may conduct an investigation within 48 hours of the time of the incident.

1. The investigation will consist of a thorough review of the circumstances leading to the incident/accident.
2. Upon conclusion of the investigation, local operating management should communicate the information in the report to the affected Company or contractor employees.
3. The incident investigation should be documented using the attached form or an equivalent (Appendix A-II).
4. The report shall contain the following:
   a. Date of the Incident;

b. Date the investigation began;

c. A description of the incident,

d. A description of the possible contributing factors. Use facts, **DO NOT SPECULATE**; and

e. Possible recommended solutions to avoid recurrence.

5. The report should include a time-table which outlines the implementation schedule for initiation of recommended corrective action(s).

6. The report will be maintained on file for a minimum of 5 years.

APPENDIX A-II

Supervisor's Accident Investigation

(To be completed by the employee's supervisor or other responsible administrative official)

Location where accident occurred:	Employer's Premises: Yes ☐ No ☐ Job site: Yes ☐ No ☐	Date of accident or illness:
Who was injured?	☐ Employee ☐ Non-Employee	Time of accident a.m. ☐ p.m. ☐

Length of time with firm	Job title or occupation	Name of dept. normally assigned to	How long has employee worked at job where injury or illness occurred?

What property/ equipment were damaged?	Property/ equipment owned by:

What was employee doing when injury/ illness occurred? What machine or tool was being used? What type of operation?

How did injury/ illness occur? List all objects and substances involved?

Part of body affected/ injured?	Any prior physical conditions? If so, what? ☐ Yes ☐ No

Nature and extent of injury/ illness and property damaged (be specific)

PLEASE INDICATE ALL OF THE FOLLOWING WHICH CONTRIBUTED TO THE INJURY OR ILLNESS

____ Improper instruction	____ Failure to lockout	____ Unsafe arrangement or process
____ Lack of training or skill	____ Unsafe position	____ Poor ventilation
____ Operating without authority	____ Improper dress	____ Improper guarding
____ Horseplay	____ Improper protective equipment	____ Improper maintenance
____ Physical or mental impairment	____ Unsafe equipment	____ Inoperative safety device
____ Failure to secure	____ Poor housekeeping	____ Other

Supervisor's corrective action to ensure this type of accident does not recur: _____

Was employee trained in the appropriate use of Personal Protective Equipment/ Proper safety procedures? Yes ___ No ___

Was employee cautioned for failure to use Personal Protective Equipment/ Proper safety procedures? Yes ___ No ___

Did employee promptly report the injury/ illness? Yes ___ No ___

Is there modified duty available? Yes ___ No ___

Supervisor's Name	Supervisor's Signature	Phone #	Date

Cimarex Energy Co.
Revised October 2007

ACCIDENT REPORTING PROCEDURES FOR PERSONAL INJURY/ILLNESS, VEHICLE AND CONTRACTOR ACCIDENTS

I. General

A. All vehicle accidents occurring while operating a Company owned or leased motor vehicle or personal vehicles used on Company business and all injuries occurring to all personnel on Company business should be reported immediately to the employees' immediate supervisor. This should be done immediately via a telephone conversation or a facsimile. The supervisor shall report the incident to the ES&H Department.

B. One of the following accident reports should be completed for all accidents / injuries depending on the type.

1. Form –Occupational Injury or Illness Report (Appendix A-III)
2. Form –Vehicle Accident Report (Appendix A-IV Minor or Appendix A-IV Major)
3. Form – Incident Report (Appendix A-V)

C. The completed accident report will be faxed or emailed to the ES&H Department. The ES&H Department or the Assistant Treasurer upon review will forward it to the Insurance Carrier.

II. Occupational Injuries and Illnesses - Employees

A. The injured employee shall report any and all injuries to his immediate supervisor as soon as possible after they occur.

B. The employee shall complete all sections required on the First Report of Injury / accident form and sign it.

C. The immediate supervisor must sign the report.

D. The ES&H Department must be notified of any lost time accident by any employee immediately by phone, electronic mail and/or facsimile.

Cimarex Energy Co.
Revised October 2007

III. Vehicle Accidents - Employees

A. Employees involved in a motor vehicle accident, shall report all such accidents to their immediate supervisor as soon as possible after the accident occurs.

NOTE: A motor vehicle accident is defined as an occurrence that results in death, injury or property damage involving the use of Company owned, rented or personal vehicles used on Company business.

B. The employee shall complete all sections of the Vehicle accident form (Appendix II), sign it, and forward it to his or her immediate supervisor.

C. The form must be signed by the employee's immediate supervisor.

D. If injuries occur to occupants (Cimarex employees) of the vehicle in the course of Company business, then Form must be completed as well to report such injuries. Injuries to non-Cimarex employees, in a Company owned vehicle, must be reported on the form and forwarded to the ES&H Department.

E. The immediate supervisor shall route the completed signed forms to the ES&H Department.

F. The Company driver shall obtain personal information along with any insurance information from the other driver, and, if applicable, the name and addresses of any witnesses, police reports and any other related information. This information should be sent to the ES&H Department, the Cimarex Legal Department and the company's insurance carrier depending on how serious the accident is.

IV. Occupational Injuries and Illnesses to Contractors and/or others

A. Injuries or illness to contractors should be documented.

B. The completed contractor's first report of injury or illness form should be requested and filed at field office and a copy sent to the ES&H Department.

V. Regulatory Reporting Requirements Injuries and Fatalities

A. ES&H Department will notify the nearest office of the Area Director of the Occupational Safety and Health Administration (OSHA) must be notified within eight (8) hours after the death of any employee from a work related incident or the in-patient hospitalization of three or more employees as a result of a work-related incident. The ES&H Department will make the telephone call to OSHA. All incidents/accidents must be reported immediately to the ES&H Department.

Cimarex Energy Co.
Revised October 2007

B. The report shall be made by the ES&H Department. They will contact the OSHA office nearest the incident or to the OSHA toll free central telephone number at 1-800-321-OSHA (1-800-321-6742).

C. The report must include the following information: name of establishment, location of incident, time of incident, number of fatalities and/or hospitalized employees, contact person, telephone number, and a brief description of the incident.

D. Injuries to Cimarex employees that require doctors' services must be filed with workers compensation. Please fill out the appropriate forms, sign them and forward them to your supervisor. The supervisor will review the form and then send it to the ES&H Department.

E. The immediate supervisor shall complete the previously identified accident report forms and send to the ES&H Department.

VI. References

1. Occupational Safety and Health Administration, Department of Labor, 29 CFF Part 1904.8.

2. American National Standards Institute, D16.1-1976 and 216.4-1977.

APPENDIX A-III

Cimarex Energy Co

Employer's First Report of Injury

Complete this form and fax or email as soon as possible following a Workers' Compensation accident or illness to the ES&H Department

Employee

Last Name: _____ First Name: _____

Social Security Number: _____ Date of Birth: _____

Employee Home Address: _____

Employee Phone Number: _____ Gender: _____ Marital Status: _____

Injury/Accident Date: _____ Injury/Accident Time: _____

Date Employer Notified: _____ If fatal, date of death: _____

Missed Work Days: _____ State Employee Reports In: _____

Branch Name: _____

Employment Status: Full time ☐ Part time ☐ Date of Hire: _____

Job Description: _____

Department Name: _____ Supervisor's Name: _____

# of Days Worked Per Week: _____ Average Hours Worked Per Week: _____

Injury or Illness

Part of body injured: _____ Type of injury: _____

Description of Injury or Illness: (Do not speculate – Facts Only) _____

_____

_____

Accident location (at branch or other location?) _____
(Give address if other)

Medical Provider Name: _____

Medical Provider Address: _____

Medical Provider Phone Number: _____

Did Employee leave work? ☐Yes ☐ No Date Employee returned to work: _____

Witnesses to accident: _____
(Name and Phone Number)

_____

Paid for Date of Injury: _____

Form completed by: _____

osition: _____ Date: _____

Cimarex Energy Co.
Revised October 2007

APPENDIX A-IV (Minor)

VEHICLE ACCIDENT FORM

*TIP: Keep a disposable camera in glove department for damage documentation!

NAME: _____

ADDRESS: _____

PHONE: WORK: ( ) _____ CELL: ( ) _____

HOME: ( ) _____

VEHICLE REGISTRATION # _____

YEAR _____ MAKE _____ MODEL _____

VEHICLE PLATE #: _____

DRIVER'S LICENSE # _____

INSURANCE CARRIER: _____ INSURANCE PHONE #: _____

POLICY #: _____

INSPECTION UP TO DATE: _____

DATE OF ACCIDENT: _____

TIME OF ACCIDENT: _____

LOCATION (Draw intersection & direction of each vehicle at time of collision. Indicate street, flow of traffic, stoplights, signs, etc.):

ROAD CONDITIONS *(Clear, rain, Snow, Mist, Fog, etc.)*: _____

CONDITION OF OTHER DRIVER *(Sober, Drunk, Hurt, etc.)*: _____

OTHER DESCRIPTION OF DAMAGE: _____

_____

_____

CALL POLICE TO REPORT ACCIDENT

NAME OF POLICE OFFICER(S): _____

_____

Cimarex Energy Co
Revised October 2007

APPENDIX A-IV (Major)

Driver's Name
License No
Company / Department

WHEN, WHERE, PLACE

Date ____ Time ____ AM ☐ PM ☐

(City or Town) (County) (State)

On ____
(Street or Highway)

At ____
(Cross Address or Intersection)

Distance and Direction from ____
(Nearest community junction, etc.)

☐ Open Country ☐ Business-Shopping
☐ Residential ☐ Manufacturing-Industrial
☐ Other (Describe)

WITNESSES

Persons seeing the accident will be of service to our driver by giving the names and addresses

NAME
Address ____ Phone ____
NAME
Address ____ Phone ____

MEDICAL AND OFFICIAL

NAME
Badge No ____ Dept ____
Citation Title ____ Other ____

VEHICLES INVOLVED

COMPANY VEHICLE (VEHICLE #1)

Make & Model
Vin No ____ Fleet No ____
Tag No. & State

OTHER VEHICLE (VEHICLE #2)

Make & Model
Tag No. & State
Driver
Address
Driver's License No.
Name, address and phone of owner (if not the driver)

Insurance Co ____ Policy No ____
Insurance Co Phone # ____

OTHER VEHICLE (VEHICLE #3)

Make & Model
Tag No. & State
Driver
Address
Driver's License No
Name, address and phone of owner (if not the driver)

Insurance Co ____ Policy No ____
Insurance Co Phone # ____

INJURED PERSONS

Number of persons injured ____ Killed ____
Name ____ Age ____
Address
Injured
Where taken
Phone number

TYPE OF ACCIDENT

☐ Collision with Other Vehicle ☐ Collision with Fixed Object

	Veh 1	Veh 2	Veh 3
☐ Ran off Road	☐	☐	☐
☐ Overturn in Road	☐	☐	☐
☐ Windshield Defect	☐	☐	☐
☐ Fire	☐	☐	☐
☐ Loading or Unloading	☐	☐	☐
☐ Occupant fell out	☐	☐	☐
☐ Occupant injured inside vehicle	☐	☐	☐
☐ Other			

PEDESTRIAN ACTION

Crossing at Intersection ☐ Between Intersections ☐
With Signal ☐ Against Signal ☐
No Signal ☐ Dooryard ☐
Walking in Roadway ☐ Sidewalk ☐ No Sidewalk ☐
Other (Describe)

DIRECTION OF VEHICLE

	Veh 1	Veh 2	Veh 3
Straight Ahead	☐	☐	☐
Turning Right	☐	☐	☐
Turning Left	☐	☐	☐
Starting or Stopping	☐	☐	☐
Stopped in Traffic	☐	☐	☐
Starting in Traffic	☐	☐	☐
Parked	☐	☐	☐
Backing	☐	☐	☐
U-Turn	☐	☐	☐
Sliding	☐	☐	☐
Overtaking	☐	☐	☐
Weaving	☐	☐	☐
Along Side	☐	☐	☐
Crowded off Road	☐	☐	☐
Evasive Action	☐	☐	☐
Other			

EVIDENCE CONDITION

MECHANICAL CONDITION

	Veh 1	Veh 2	Veh 3
No Defect	☐	☐	☐
Lights	☐	☐	☐
Brakes	☐	☐	☐
Tires/Wheels	☐	☐	☐
Windshield/Windows	☐	☐	☐
Disabled	☐	☐	☐
Other			

ROADWAY CONDITION AND CONTROLS

☐ Not at Intersection ☐ Bridge-Overpass
☐ Street Intersection ☐ Underpass
☐ Driveway Alley ☐ Private property
☐ Crosswalk ☐ Other off-street
Other (describe)
☐ Not Divided ☐ Divided ☐ Limited Access
☐ No. of Lanes 2 3 4 5

ROAD SURFACE

☐ Lanes Marked ☐ Unmarked
☐ Concrete ☐ Gravel
☐ Blacktop ☐ Other (describe)
☐ Wood Planking (Deep)
Other (specify)
☐ No Defects ☐ Mud
☐ Dry ☐ Loose Material
☐ Wet ☐ Cinders, Ashes, etc
☐ Ice ☐ Fresh Oil
☐ Snow ☐ Under construction or repair
Other (describe)
☐ Straight ☐ Level ☐ Hill ☐ Slope ☐ Undulating
☐ Curve ☐ R ☐ L ☐ Stairs ☐ Intersection

TRAFFIC CONTROLS

☐ Traffic Lights ☐ R.R. Crossing Signal/Gates
☐ Stop Sign ☐ No Traffic Control
☐ Yield Sign ☐ Posted Speed Limit ____
☐ Police Officer ☐ Other
Were witnesses (bystanders) ? yes ☐ no ☐

Cimarex Energy Co.
Revised October 2007

APPENDIX V (Major)

WEATHER CONDITIONS

- ☐ Clear
- ☐ Snow
- ☐ Sleet
- ☐ Fog
- ☐ Rain
- ☐ Other (specify) _____
- ☐ Daylight
- ☐ Dawn
- ☐ Sunset
- ☐ Dark-road lighted
- ☐ Dark-road lighted

VEHICLE DAMAGE

Point of Impact

	Veh 1	Veh 2	Veh 3
Front	☐	☐	☐
Rear	☐	☐	☐
Right Front	☐	☐	☐
Left Front	☐	☐	☐
Right Rear	☐	☐	☐
Left Rear	☐	☐	☐
Right Side	☐	☐	☐
Left Side	☐	☐	☐
Roof	☐	☐	☐

Other _____

Cargo Weight/Type _____

Cargo Damage _____

Other Property Damage _____

DRIVER'S HOURS INFORMATION

Time you reported for duty _____

Total preceding hours of duty _____

Hours since last sleep at time of going on duty _____

Hours on duty at time of accident _____

WHAT HAPPENED

At what distance did you first see danger? _____ Ft

How fast were you going? _____ MPH

What was your speed at impact? _____ MPH

How far did your vehicle go after impact? _____ Ft

Describe in your own words the circumstances of the accident.

_____

Describe damage to:

Your vehicle _____

Other vehicles _____

Accident Scene

Instructions for Accident Diagram

Fill in dotted lines to correspond with road at accident site. Show position of all vehicles, pedestrians, etc. as follows:

Your vehicle

Other vehicle(s) — Numbered consecutively

Pedestrian

Traffic Signal

Traffic Sign — (indicate type)

Signature _____

Date _____

CIMAREX

FLEET ACCIDENT REPORT

To be completed at Accident Scene

WHAT TO DO IN CASE OF AN ACCIDENT

1. STOP AT ONCE and INVESTIGATE.
2. Protect the scene. Use warning devices. Get help from bystanders. Turn off all engines. No smoking. Guard against fire.
3. Aided injured persons. Don't move them unless absolutely necessary. Summon ambulance if needed.
4. Get help. Use nearby phone or send reliable passerby. Notify police. Give location and nature of accident accurately. Do not leave the accident scene.
5. Identify yourself and company. Show license and registration on request.
6. BE COURTEOUS. Make no statement about accident except to police or company and insurance company representative.
7. Fill out and check off all applicable information on enclosed form BEFORE YOU LEAVE THE SCENE.
8. File accident report with police.
9. Inform your manager immediately of accident.

Cimarex Energy Co.
Revised October 2007

APPENDIX A-V

INCIDENT REPORT

CASE FILE # _____
(For office use only)

DATE OF RECORD: _____ REPORTED BY: _____
DATE OF INCIDENT: _____ REPORTED TO: _____
DEPARTMENT: _____ DIVISION: _____

INCIDENT TYPE

*SECURITY	*DESTRUCTION	*THEFT
☐ Bomb Threat	☐ Fired Explosion	Est. Value:
☐ Ethics	☐ Spill Pollution	List stolen items on reverse side
☐ Workplace Violence	☐ Weather	Include: Description
☐ Sexual Harassment	☐ Vandalism	Value
☐ Threats	☐ Safety	Model
☐ Contraband	☐ Regulatory	Serial #
☐ Other	☐ Other	Any other identifying marks

LOCATION OF INCIDENT (Office, Plant, Yard, Lease etc.)

Address of Nearest Town:
Address City State County

DESCRIBE WHAT HAPPENED: (Use reverse side for additional space) Do Not Speculate.

ATTACH DESCRIPTION & DETAILS FOR THEFTS/OTHER INCIDENTS FORMS IF APPLICABLE

HAVE LAW ENFORCEMENT/ REGULATORY AGENCIES BEEN NOTIFIED? ☐ YES ☐ NO

LIST AGENCIES, NAMES, REPORT NUMBERS (IF KNOWN) _____

THIS REPORT PREPARED BY:

NAME: DEPARTMENT: DATE & TIME:

Pg. 1

Cimarex Energy Co.
Revised October 2007

PROPERTY/PRODUCT TAKEN, MISSING OR DAMAGED

Quantity	Units	DESCRIPTION OF ITEM (include make, model & serial #) Product Description (crude oil, gasoline, antifreeze, etc.)	New	Used	Est. Value or Replacement Cost

HYDROGEN SULFIDE (H_2S) SAFETY PROGRAM

I. Program Overview

A. Each field or plant location where employee exposures to hydrogen sulfide gas (H_2S) may exceed 10 parts per million (ppm) by volume in air should have a (H_2S) safety program to govern Company field activities that may expose employees to H_2S. This program will satisfy the requirement above if all provisions set forth below are met. Any site specific procedures that may be developed for a location in addition to this program must be as stringent as those outlined herein and established in writing.

B. Each field or plant location that is considered "sour" as described above shall comply with all aspects of governmental regulations (OSHA) and Company policy regarding operations where H_2S may be present. The ES&H Department along with the field supervisors will be responsible for implementation and enforcement of the H_2S safety program.

C. No person shall enter an area where high concentrations of H_2S are known or suspected to be greater than ten (10) parts per million (ppm) by volume in the employees breathing zone without wearing proper respiratory protective equipment or having the equipment available.

D. All contract personnel working for Cimarex should be required to be H_2S certified and will carry an H_2S monitor while working on any company location where H2S is present. Cimarex employees are required to comply with the same H_2S safety requirements.

E. "APPENDIX H-VI" provides background information regarding exposure levels, tank gauging, and various topics concerning H_2S.

F. Personnel with perforated eardrum may not be safe even with proper respiratory protection equipment.

II. Training Program

A. Safety training will be provided to all personnel who may be required to work in a known or suspected H_2S environment. This training must be given prior to entering or working in an H_2S environment. The following areas must be covered in the program:

1. Hazards, properties and characteristics of H_2S and sulfur dioxide (S02) gases;
2. Sources of H_2S and SO_2;
3. Use of H_2S detection devices;
4. Description of H_2S and/or $S0_2$ detection systems used at some locations;
5. Symptoms of exposure;
6. Use and limitations of respiratory protection equipment. Hands-on training is essential;
7. First aid procedures and equipment including location of safety equipment;
8. Use of the "buddy system" and emergency rescue procedures;
9. Wind direction awareness and routes of egress (exits);
10. Confined space and enclosed space entry procedures;
11. Contingency plans including gauging procedures; and
12. Company policy and procedures for H_2S locations. This should include a discussion of workplace practices and relevant maintenance procedures established to protect personnel.

B. All personnel who work in or may be required to work in an H_2S area (employees and contractors) shall complete a refresher course in H_2S safety annually.

C. All training shall be documented. In addition, it is recommended that wallet cards be issued to those successfully completing the course.

D. Contractors shall document and provide verification of such training to Cimarex upon request.

III. Hydrogen Sulfide Respiratory Protective Equipment

A. Type/Selection

1. Only positive pressure self-contained breathing apparatus (SCBA) or positive pressure air line units with an escape unit will be used in any known or suspected H_2S environment of 20 ppm or greater in the breathing zone. The use of canister type gas masks for protection against H_2S is prohibited.

2. Only positive pressure SCBA or positive pressure air line respirators with an emergency egress bottle shall be used when an employee is exposed to hydrogen sulfide (H_2S), oxygen deficient atmospheres, or atmospheres designated as immediately dangerous to life and health (IDLH). The ES&H Department should be consulted if there are questions as to when or what type respiratory protective equipment is necessary.

B. Personnel Requirements

1. Company employees must be physically able to utilize a SCBA or airline unit if they are to be assigned to a work location where H_2S is present or suspected. Personnel who may be required to wear respiratory protection equipment on a routine basis will undergo an annual pulmonary function test. A physician or a qualified medical person should determine if an employee is physically able to wear a respirator. A routine basis is defined as having to wear respiratory protection at least monthly.

2. Facial hair shall not come into contact with the sealing portion of the face - piece. (See the "FACIAL HAIR POLICY")

C. Respirator Maintenance, Cleaning, Storage

1. Respirators should be visually inspected prior to and after each use to ensure they are in proper working condition. Visual inspections do not have to be documented. Respirators should be inspected monthly and documented.

2. Supervisors or a designated person at each field location where respirators are available are responsible for ensuring that monthly inspections and any necessary maintenance are performed on the units.

3. Respirators should be cleaned after each use in accordance with the procedures outlined in the "Respiratory Protection Program".

4. Breathing equipment must be stored in its carrying case or other designated container in a convenient location to facilitate easy access in an emergency situation.

5. Respirator air cartridges or tanks should be kept in a full and ready state at all times. They shall be refilled if the air supply falls below 85 percent of the cylinder capacity.

6. Respirator storage areas must be clearly identified.

7. Compressed breathing air cylinders shall be hydrostatically tested in accordance with the manufacturer's recommendation.

IV. Breathing Air Quality

A. All breathing air in SCBA and airline respirators shall meet or exceed ANSI Z66-1-1973 specifications for Grade D breathing air.

B. Suppliers of compressed breathing air must furnish written documentation at each batch filling of air cylinders that the air meets Grade D specifications. A copy of this documentation must be kept on file at each operating location where breathing air is used.

V. Atmospheric Testing and General Sign Requirements

A. H_2S concentrations are to be measured level with the thief hatch on all sour crude, condensate and produced water tanks where there is potential for employee exposure. H_2S concentration measurements for areas other than tank openings can be performed in the breathing zone. A standby person should be available when performing initial H_2S concentration testing of areas known or suspected to have H_2S.

B. All field and plant locations along with all wells and production facilities that present potential H_2S exposure shall be so designated at all of their access points with danger signs that warn personnel of potential H_2S exposure.

C. Locations with limited public road access may use one H_2S sign at each given access point to a group of well locations. All H_2S locations must have the proper signs attached to access points.

VI. Specific Work Procedures

A. No tank, line, valve, flange, etc. which could produce an H_2S concentration of 10 ppm or greater in the employees breathing zone shall be opened to the atmosphere unless proper respiratory protection is worn by the employee performing the job.

B. When possible, equipment that contains H_2S should be depressurized, isolated, purged and cleaned before opening.

C. After opening equipment to atmosphere, the atmosphere inside the equipment shall be sampled to determine the H_2S level. Respiratory protection must be worn when opening the equipment to atmosphere and during testing. If concentrations exceed 10 ppm in the breathing zone, respiratory protection must be worn for the duration of the job or until the H_2S level drops below 10 ppm.

D. Personal monitoring equipment shall be used by employees working without respiratory equipment where there is a probability that H_2S levels may exceed 10

ppm in the breathing zone (i.e. catwalks at sour tanks, water stations and header buildings where dissolved H_2S in the water may create airborne levels in excess of 10 ppm. The field supervisor will determine where such probabilities might exist in a given facility. The H_2S personal monitoring alarm must be set to alarm at 10 ppm so the employee is alerted to vacate the area to get respiratory equipment. If the area is equipped with a fixed detection system then personal monitoring devices are optional. These devices shall be calibrated per the manufacturer's specifications.

E. The buddy system should be used when employees may be exposed to 300 ppm of H2S in their breathing zone during the course of their work other than working at or near an open thief hatch. For fieldwork that requires the opening of a thief hatch, a standby person should be utilized when the concentration of H_2S exceeds 300 ppm measured level with the thief hatch. OSHA equates the breathing zone as being level with the thief hatch for tank gauging operations. The standby person and the employee must be equipped with a SCBA and must wear the SCBA if the potential exists for his exposure to exceed 10 ppm H_2S.

F. Relief valves venting dangerous concentrations of (>300 ppm) H_2S vapors must be vented to flare or where personnel will not be exposed.

G. Sour gas wells shall not be left unattended during blow-down.

VII. H_2S Emergencies

A. Once the H_2S alarm goes off Cimarex employees should evacuate the area, account for personnel, secure the area, and isolate the leak, etc.

B. Field or plant employees should not respond to an H_2S alarm / leak alone. The buddy system must always be used in response to alarm situations.

C. All personnel will be trained in their responsibilities regarding H_2S alarms and emergencies. Training shall be documented.

D. Contractors and visitors should be aware of their responsibilities during an H_2S alarm before they begin work on any potential H_2S location. Unless otherwise defined, their responsibilities shall be to evacuate the area and report to a safe briefing area immediately.

E. Safe briefing areas shall be established for all manned H_2S locations.

F. The supervisor or the designated person in charge of the site has the authority to decide whether an H_2S leak is to be ignited. **Note:** Some state law enforcement agencies have jurisdiction on deciding whether or not to ignite an H_2S leak.

VIII. H_2S Detection Equipment

A. Fixed H_2S detection systems shall be considered for areas that may experience H_2S leaks, where employees are present on a daily basis or where the locations are near residences or other public buildings. The system shall activate a distinctive alarm.

B. Sensors shall be set to annunciate at 10 ppm for a low alarm and at a maximum of 300 ppm for a high alarm on fixed systems.

C. The system should be calibrated at least every 90 days.

D. All H_2S alarms that are activated shall be treated as an actual gas release.

E. H_2S alarms shall be distinctive from all other alarms and shall be consistent throughout the facility.

F. Hand held detection instruments should be utilized for spot-checking areas. All electronic hand held instruments shall be calibrated per the manufacturer's specifications.

IX. First Aid Treatment of Hydrogen Sulfide Victims

A. Activate your Emergency Response Plan and telephone for help.

B. Always put on a SCBA before entering a potential H_2S area, then remove the victim to a safe area and begin artificial resuscitation.

C. If breathing has stopped, request mechanical resuscitator (use mouth to mouth resuscitation until it arrives). Employees must be trained in resuscitation techniques when working around any H_2S location. This training should be taught during the CPR training.

D. Initiate CPR if no pulse is detected.

E. Treat for possible shock (keep the victim warm).

F. Ensure that all Cimarex employees that are overcome by H_2S are examined by a physician before returning to work.

X. Safe Operating Procedures for Tank Gauging Operations Containing Hydrogen Sulfide Gas (H_2S)

A. Equipment Requirements and Testing:

1. Personal H_2S monitors should be worn by all employees during tank gauging

operations in areas known or suspected to contain H_2S.

2. Personal H_2S monitors shall be set on 10 ppm.

3. Respiratory protective equipment shall be worn by all employees during tank gauging operations when hydrogen sulfide concentrations in the breathing zone are equal to or greater than 20 ppm. Local exhaust ventilation may be used in lieu of respiratory protective equipment if it is capable of reducing the H_2S concentrations in the employees breathing zone to less than 20 ppm.

4. Positive pressure supplied airline respirator equipped with a five-minute escape pack, or a positive pressure SCBA shall be used by personnel gauging tanks.

5. When concentrations measured level with the thief hatch exceed 300 ppm of H_2S, or when performing other functions that equal or exceed 300 ppm in the breathing zone, the use of a standby person should be utilized. The standby person must have a positive pressure SCBA immediately available on the work site so he/she may perform a rescue if needed.

6. Tests may be done using hand held pumps and detector tubes or an approved electronic tester. Preferably, sampling of H_2S at the thief hatches should be done during the warmer months to determine the highest concentrations that a worker might be exposed to.

7. Testing shall be done in accordance with H_2S testing Requirements for Production Tanks in "Known or Suspected H_2S Locations" section XI below.

B. Warning Sign Requirements

1. When concentrations of hydrogen sulfide gas, level with the thief hatch exceed 10 ppm a sign, as the one below shall be posted at the base of the stairs. The sign shall be at all locations where the tank vents through the hatch.

Danger (red, black and white)

Hydrogen Sulfide

Positive Pressure

Respiratory Protection Required

2. At those locations where concentrations exceed 300 ppm of hydrogen sulfide measured level with the thief hatch, warning signs indicating the need for a standby person shall be posted.

3. A sign shall be installed at the base of the stairs and shall consist of the following wording.

Danger (red, black and white)

Hydrogen Sulfide

Positive Pressure Respiratory Protection and

Standby Person Required

4. When concentrations are less than 20 ppm, level with the thief hatch open, no sign or respiratory protection is required for tank gauging operation.

5. Those central tank batteries (CTB) that have various hydrogen sulfide concentration levels in the tank must be properly identified on the individual tank or with the appropriate warning signs installed at the base of the stairs. If a standby man is necessary, it should be appropriately identified.

C. Additional Facility Guidelines – Sour Tank Batteries

1. At all tank battery locations where concentrations of hydrogen sulfide gas, level with the thief hatch can exceed 20 ppm (100 ppm level with the thief hatch open), a windsock or similar wind direction indicator shall be installed.

2. The wind indicators should be installed as to give an accurate indication of the wind direction at the height gauging operations would be performed.

XI. H_2S Testing Requirements for Production Tanks in Known or Suspected H_2S Locations

A. Production tanks are defined as all tanks that are used in storing, shipping, or holding produced fluids. Produced fluids are oil, condensate, and water, or any combination thereof. These tanks include but are not limited to production, shipping, slop, recycle or pop tanks. Production tanks do not include process vessels, towers, columns, or bullets.

B. All production tanks in areas known or suspected to have H_2S contaminated production must be tested initially to determine the H_2S levels. A standby person is required when performing initial H_2S concentration testing of areas known or suspected to have H_2S. Documentation of previous tests will satisfy the initial testing requirement.

C. All samples can be taken level with the thief hatch or in the vapor space. The thief hatch samples must be taken level with the hatch.

D. After the initial tests in areas known or suspected to have H_2S, retesting is required depending on the level of H_2S, changes in the process which might cause

concentration levels to change. Check with the ES&H Department for testing intervals.

II. References

1. Occupational Health and Safety Administration, Department of Labor; 29 CFR 1910.134,1910.1000

2. American National Standards Institute, 286-1-1973 and 237.2-1972

APPENDIX H-VI

Background – H_2S Tank Gauging Procedures

Manual tank measurements from the top of crude oil and produced water tanks are sometimes necessary for a variety of reasons. These reasons vary from the need to know the fluid change in a tank not equipped with a LACT (Lease Automatic Custody Transfer) unit to the actual sale and transfer measurements of product from tanks not accessible by pipeline.

The most common measurement made from the tank top is fluid volume. This is made through the thief hatch using a gauge tape and plumb bob. Other activities that require an employee to open and stand nears tank's thief hatch include measurement of oil temperature, gravity, and sample collection (thieving) for BS&W concentration. None of those measurements require more than approximately five minutes time to complete at the thief hatch.

Opening the thief hatch allows the release of gases and vapors that have accumulated in the vapor space of the storage tank. The rate of release of those gases change with such variables as the rate of fluid influx into the tank, fluid level in the tank, fluid temperature, gas break-out rates, how long the fluid has weathered, etc.

Vapors and gases from petroleum tanks and produced water tanks do not normally present known or recognized health hazards requiring any special precautions unless they contain a toxic chemical such as hydrogen sulfide (H_2S). The majority of vapors and gases are composed of simple asphyxiants such as methane, ethane, propane and butane. Simple asphyxiants must dilute the oxygen content of air before they become a serious health hazard. Dilution with outside air is rapid once the gas has escaped the thief hatch. The presence of hydrogen sulfide in the vapor space of a tank, however, presents a different problem. Hydrogen sulfide is a toxic gas that has little or no warning properties at lethal concentrations.

The following is a summary of H_2S exposure limits and appropriate precautions required by Field Locations:

> 20 ppm is the ACGIH eight-hour, time-weighted average (TWA) exposure limit. Exposures equal to or above this limit require the use of a positive pressure SCBA or supplied air with a five-minute escape pack. Exposures below 10 ppm require no respiratory protection. 20 ppm is the federal OSHA acceptable ceiling concentration.
>
> 300 ppm - Requires the use of positive pressure type breathing apparatus and the presence of a standby man trained and equipped for rescue when breathing zone exposures are equal to or above this concentrations wind sacks are required when thief hatch concentrations exceed 100 ppm or breathing zone concentrations exceed 10 ppm.
>
> Based on the toxicity of H_2S as described in API Recommended Practices RP 55 and the ANSI Standard, the current practice is that employees wear a full-face supplied air pressure demand type breathing apparatus when breathing zone exposures equal or exceed 10 ppm.

Cimarex Energy Co.
Revised October 2007

A total catastrophic failure of the respiratory equipment during tank gauging operations should not impair employee's ability to lower the thief hatch and move to a safe area when airborne concentrations of H_2S are below 300 ppm.

Usually, lowering the thief hatch will be the only action necessary to lower the exposure concentration to a safe level.

H_2S Health Effects and Exposure Standards

The American Conference of Governmental Industrial Hygienists (ACGIH) has adopted an eight-hour time-weighted average (TWA) exposure limit of 10 parts per million (ppm). The federal OSHA acceptable ceiling concentration is 20 ppm.

The National Institute for Occupational Safety and Health (NIOSH) lists 300 ppm (unprotected exposure) as its 30 minute Immediately Dangerous to Life or Health (IDLH) atmosphere. Concentrations of 1,000 ppm hydrogen sulfide gas may cause cessation of respiration and death if not properly resuscitated.

The API Recommended Practices for Conducting Oil and Gas Operations Involving Hydrogen Sulfide (API RP 55 October, 1981) indicates H_2S concentrations of 100 ppm will cause "coughing, eye irritation, loss of sense of smell after 3 to 15 minutes." H2S Concentrations at 200 ppm "kills sense of smell rapidly, burns eyes and throat". H_2S concentrations of 500 ppm cause "dizziness, loss of sense or reasons and balance, breathing problems in a few minutes." API RP 55 goes on to state that H_2S concentrations at 700 ppm can cause unconsciousness quickly" Similarly, the American National Standards Institute (ANSI) Standard No.237.2-1972 regarding hydrogen sulfide indicates the H_2S exposures in the 500 to 700 ppm range cause "loss of consciousness and possibly death in 30 minutes to one hour."