DRAFT
Environmental Assessment for the Rands Butte Gas Development Project

Volume 2
Appendices

January 2010

The BLM manages more land – 253 million acres – than any other Federal agency. This land, known as the National System of Public Lands, is primarily located in 12 Western States, including Alaska. The Bureau, with a budget of about $1 billion, also administers 700 million acres of sub-surface mineral estate throughout the nation. The BLM's multiple-use mission is to sustain the health and productivity of the public lands for the use and enjoyment of present and future generations. The Bureau accomplishes this by managing such activities as outdoor recreation, livestock grazing, mineral development, and energy production, and by conserving natural, historical, cultural, and other resources on public lands.

BLM/WY/PL-10/003+1310

WY-100-EA09-43

Appendix A
Project Design Schematics

CONCRETE CAISSON SCHEDULE

STR. NO.	STRUCTURE FRAMING TYPE	A.B. CAGE UNIT WEIGHT	TOTAL NO. REQD.	CONCRETE			REINFORCING BARS		
				DIAM. D	LENGTH L	CY/ PIER	TIES (HORIZONTAL)		
							SIZE C	ANCHOR BOLT CIRCLE DIA.	TOTAL
4	TE252	5740 LBS.	1	4.5'	27'	16	#4	45"	26

VERTICAL REINFORCING BARS		
SIZE	REBAR LENGTH	TOTAL
#8	27'	4

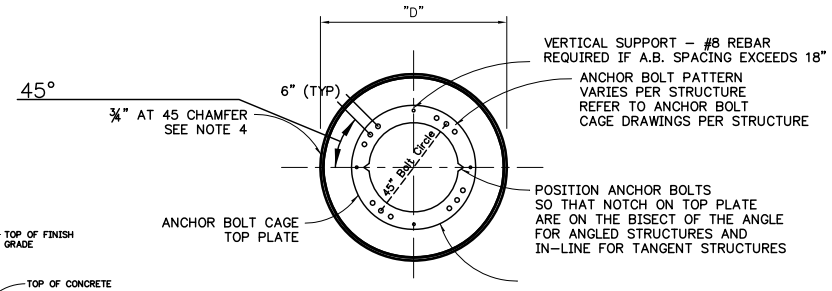

DETAIL 1: Top Plate

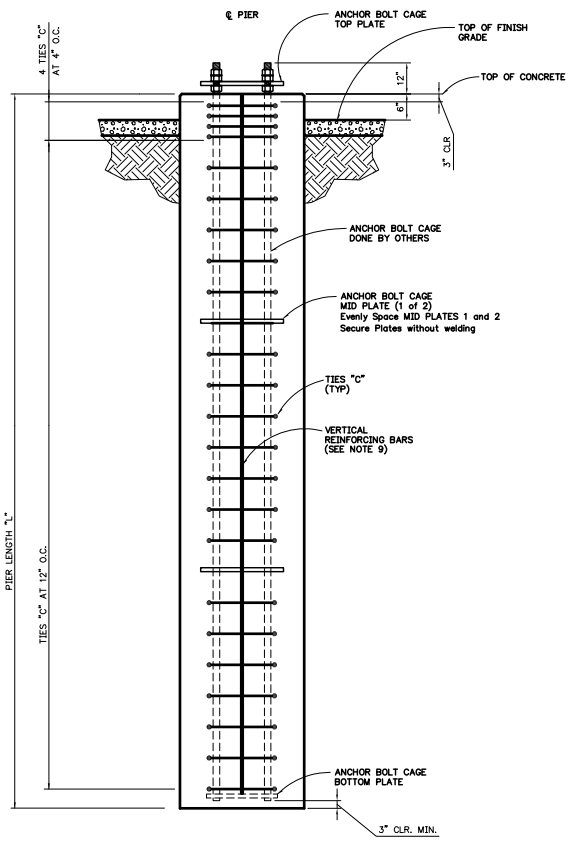

SECTION A–A
TYPICAL DRILLED PIER

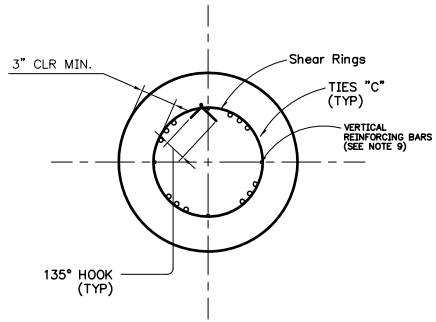

Detail 2: Rebar Reinforcement

NOTES

1. ALL CONCRETE SHALL HAVE A MINIMUM STRENGTH OF 3,500 PSI AT 28 DAYS WITH 6% ENTRAINED AIR.
2. ALL REINFORCING STEEL SHALL BE DEFORMED INTERMEDIATE GRADE NEW BILLET STEEL CONFORMING TO ASTM A615 GRADE 60.
3. TIE WIRE SHALL BE #18 GAUGE MINIMUM.
4. BEVEL ALL EXPOSED PROJECTING CORNERS OF CONCRETE WORK ¾" X ¾" UNLESS INDICATED OTHERWISE.
5. MINIMUM REINFORCING COVER SHALL BE AS FOLLOWS, UNLESS NOTED OTHERWISE:
   CONCRETE CAST AGAINST EARTH.....3"
   ALL OTHER SURFACES.....2"
6. HORIZONTAL TOLERANCE FOR ANCHOR BOLT LOCATION TO BE +/– ⅛".
7. SEE CONCRETE SPECIFICATIONS FOR DETAILED CONCRETE REQUIREMENTS.
8. ANCHOR BOLT CAGE AND STRUCTURES SUPPLIED BY SABRE TUBULAR STRUCTURES. CONTACT PERSON IS KEN TAYLOR. P.O. #4500389776
   PHONE: (817) 852–1840
9. NOTCH MIDDLE TEMPLATES TO ACCOMODATE VERTICAL REINFORCING BARS.

PROJ/ER# 02920003	
PL#	
DATE 2/15/2008	
ENG ASL	DES
DR	CH
APPROVAL	

Woods Cross–Holly Oil
46kV TRANSMISSION LINE
CONCRETE CAISSON SCHEDULE

PACIFICORP TRANSMISSION

SCALE: N.T.S. SHEET 1 OF 1 REV. 0

PLOT SCALE: CAD NO.: CAISSON SCH. ATTCH'D XREF/RASTER:NONE

No.	DATE	REVISION	BY	CHK	APP	No.	DATE	REVISION	BY	CHK	APP	DRAWING No.	REFERENCE DRAWINGS	DRAWING No.	REFERENCE DRAWINGS

BORDER REVISED 06.27.02 R.J.R.

TI 432 _ _ _ _ _

RCMS Code: CU

May be used
In raptor areas

230 kV Structure—Shielded, 3-Pole—Angle, 8° to 20°

Scope

This structure is used for small to medium line angles when shielding is required.

Line Angle: 5° to 30°

Standard References

TA 181	General—Blowout and Right-of-Way Width Considerations
TC 161	*Clearances—for Conductors on the Same Support*
TD 001	*Poles—General Information*
TD 100	*Conductor—General Information*
TD 200	*Shield and Guy Wire—General Information*
TD 300	*Grounding—General Information*
TD 400	*Suspension Hardware—General Information*
TD 600	*Guys and Anchors—General Information*
TD 700	*Crossarms and Braces—General Information*
TD 800	*Insulators—General Information*
TD 900	*Bolts, Nuts, and Washers—General Information*

Conductor	Code
795 ACSR “Drake”	D
954 ACSR “Cardinal”	E
1272 ACSR “Bittern”	F
795 AAC “Arbutus”	G
1272 AAC “Narcissus”	H
None	Z

Conductor Accessories	Code
Suspension Hardware	
Armor rod	A
Line guard	B
None	Z

Shield Wire	Code
3/8 EHS	A
1/2 EHS	B
7#8 AW	C
7#6 AW	D
3/8 EHS w/AGS	E
1/2 EHS w/AGS	F
7#8 AW w/AGS	G
7#6 AW w/AGS	H
3/8 EHS w/armor rod	I
1/2 EHS w/armor rod	J
7#8 AW w/armor rod	K
7#6 AW w/armor rod	L
None	Z

Insulation	Code
Porcelain	A
Polymer	B

Pole Class	Species	Code
1	Douglas fir	C
H1	Douglas fir	D
H2	Douglas fir	E
1	Western red cedar	H
H1	Western red cedar	I
H2	Western red cedar	J

TI 432

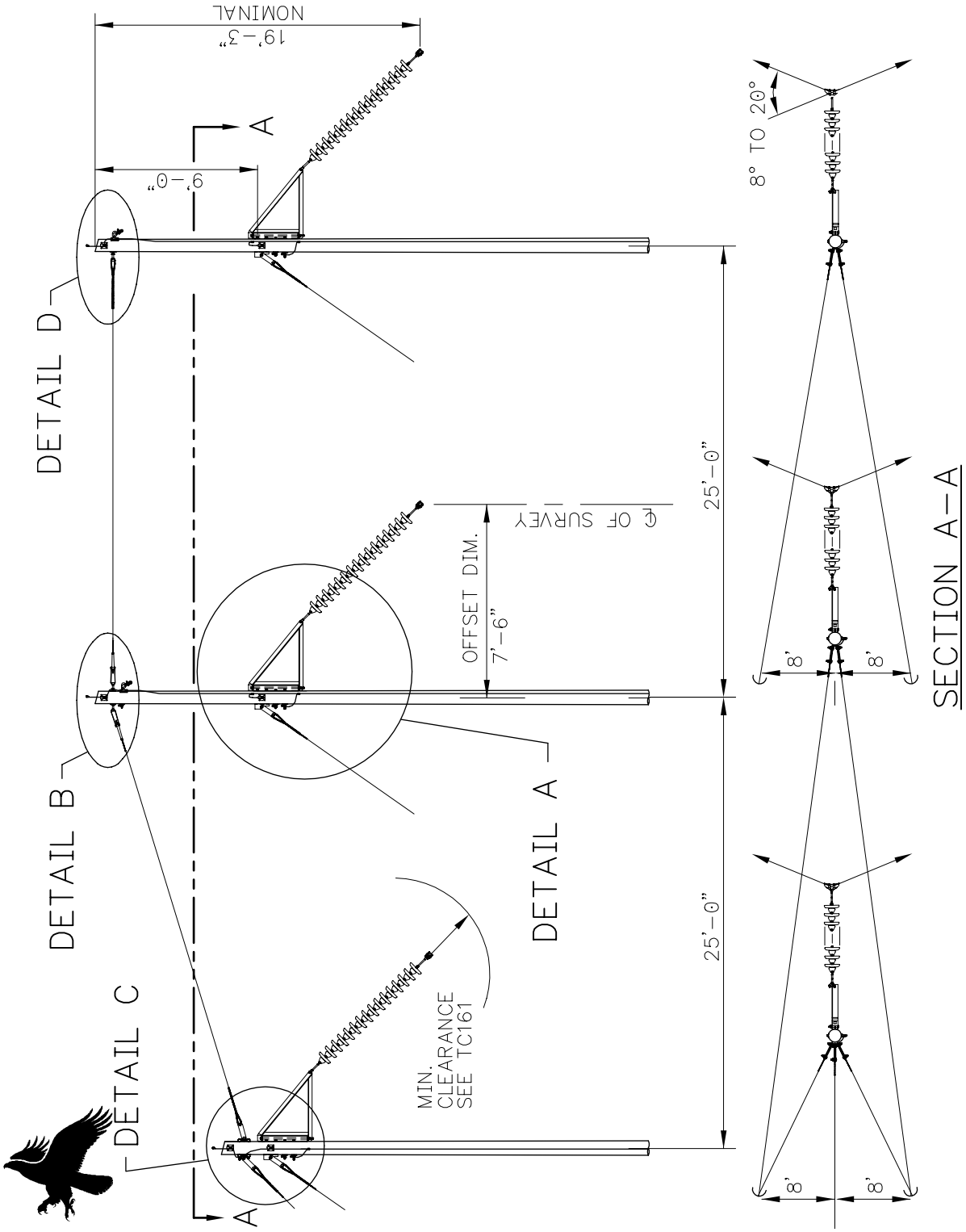

May be used
In raptor areas

PACIFICORP PACIFIC POWER UTAH POWER		230 kV Structure—Shielded, 3-Pole—Angle, 8° to 20°	Transmission Construction Standard
TI 432 Page 2 of 4	6 Nov 00		Asset Policy Engineer (C. L. Wright): Asset Policy Manager (G. Shaw):

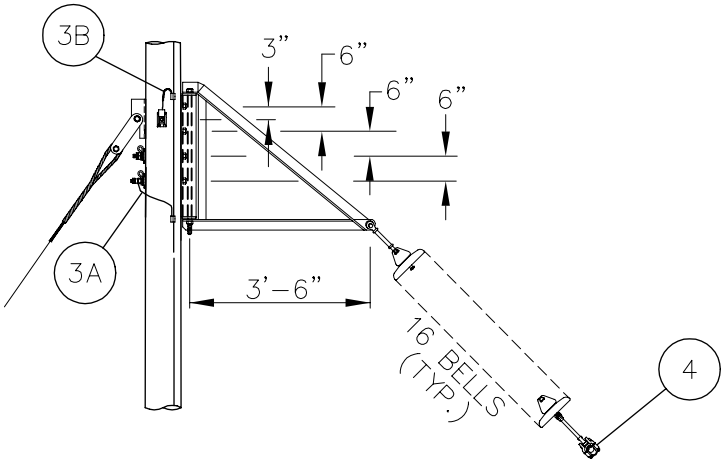

DETAIL A

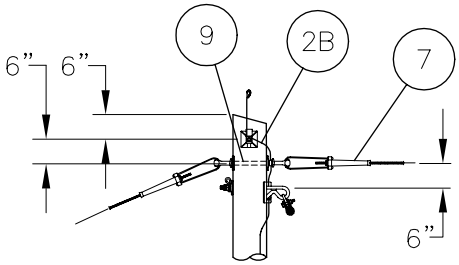

DETAIL B

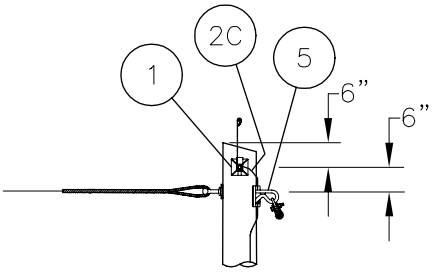

DETAIL D

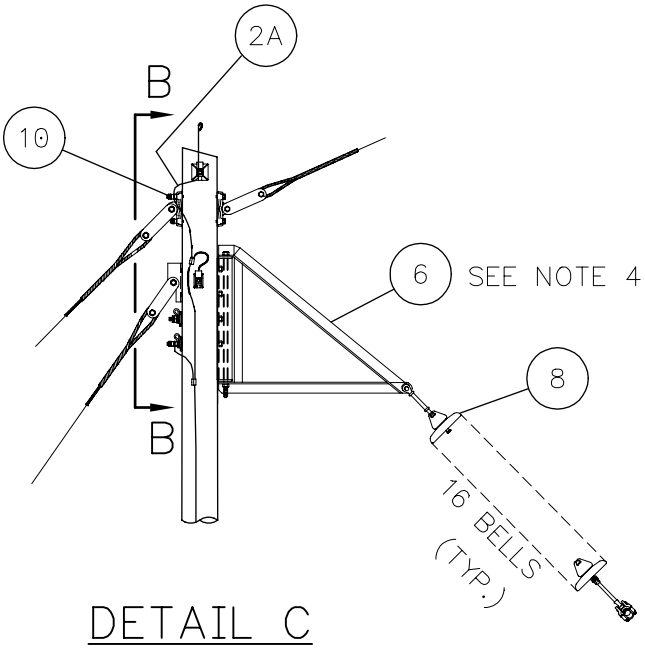

DETAIL C

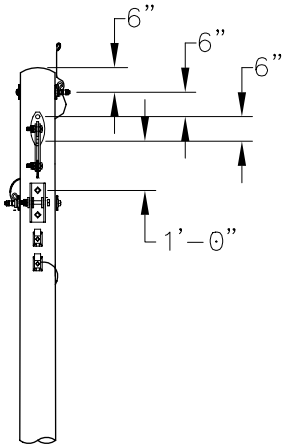

SECTION B–B

Transmission Construction Standard	230 kV Structure—Shielded, 3-Pole—Angle, 8° to 20°	PACIFICORP PACIFIC POWER UTAH POWER	
Asset Policy Engineer (C. L. Wright): CLW Asset Policy Manager (G. Shaw):		6 Nov 00	TI 432 Page 3 of 4

Table 1 – Components

Item	Qty.	Standard	Description
1	6	TD 022_	Pole Assembly, Split-Bolt, 3/4″ Diameter
2A	1	TD 321C E	Grounding Assembly, Hardware-to-Hardware
2B	1	TD 321C C	Grounding Assembly, Hardware-to-Hardware
2C	1	TD 321C Z	Grounding Assembly, Hardware-to-Hardware
3A	3	TD 322D	Grounding Assembly, Hardware-to-Structure Ground
3B	3	TD 322C	Grounding Assembly, Hardware-to-Structure Ground
4	3	TD 420_ _ D	Suspension Assembly, Conductor
5	2	TD 425_ _ A	Suspension Assembly, Shield Wire
6	3	TD 430E _ _	Bracket Assembly
7	1	TD 540_ F B	Tie Wire Assembly
8	3	TD 828E _	Insulator Assembly, Suspension or Strain, Y-Clevis Ball, Hot-Line
9	1	TD 921_ B	Bolt Assembly, Double-Arming, 3/4-Inch
10	2	TD 928_ D	Bolt Assembly, Machine, 1-Inch

Table 2 – Additional Material To Be Specified To Complete This Structure

Item	Qty.	Standard	Description
A	3	TD 020_ _ A	Wood Pole Assembly
B	1	TD 622_ _ _ _	Guy Assembly, Dead-End Tee Pole Attachment
C	3	TD 624_ _ _ _	Guy Assembly, 2-Bolt Splayed Channel Pole Attachment
D	AS REQ	TD 630_ _ _	Anchor Assembly

Notes

1. All hardware is to be bonded when it is separated by less than 8 inches. Bond wire shall loop around the bolt.
2. Install spring washers with loop end up where possible.
3. All pole attachment hardware shall be bonded to the pole grounding assembly.
4. See Notes section in TD 430 for installation details for attaching bracket assemblies to pole.
5. Clearance between the conductor and the structure shall be maintained under reverse wind conditions.
6. Class 1 or better pole is recommended.

TI 435 _ _ _ _ _

RCMS Code: CU

May be used
In raptor areas

230 kV Structure—Shielded, 3-Pole—Angle, 30° to 45°

Scope

This structure is used for medium line angles when shielding is required.

Line Angle: 30° to 45°

Standard References

TA 181	General—Blow-out and Right-of-Way Width Considerations
TC 161	*Clearances—for Conductors on the Same Support*
TD 001	*Poles — General Information*
TD 100	*Conductor—General Information*
TD 200	*Shield and Guy Wire—General Information*
TD 300	*Grounding—General Information*
TD 400	*Suspension Hardware—General Information*
TD 600	*Guys and Anchors—General Information*
TD 800	*Insulators—General Information*
TD 900	*Bolts, Nuts, and Washers—General Information*

Conductor	Code
795 ACSR "Drake"	D
954 ACSR "Cardinal"	E
1272 ACSR "Bittern"and 1557.4 ACSR/TW "Potomac"	F
795 AAC "Arbutus"	G
1272 AAC "Narcissus"	H
None	Z

Conductor Accessories	Code
Suspension Hardware	
Armor rod	A
Line guard	B
None	Z

Shield Wire	Code
3/8 EHS	A
1/2 EHS	B
7#8 AW	C
7#6 AW	D
3/8 EHS w/armor rod	I
1/2 EHS w/armor rod	J
7#8 AW w/armor rod	K
7#6 AW w/armor rod	L
None	Z

Insulation	Code
Porcelain	A
Polymer	B

Pole Class	Species	Code
1	Douglas fir	C
H1	Douglas fir	D
H2	Douglas fir	E
1	Western red cedar	H
H1	Western red cedar	I
H2	Western red cedar	J

© 2007 by PacifiCorp. All rights reserved.

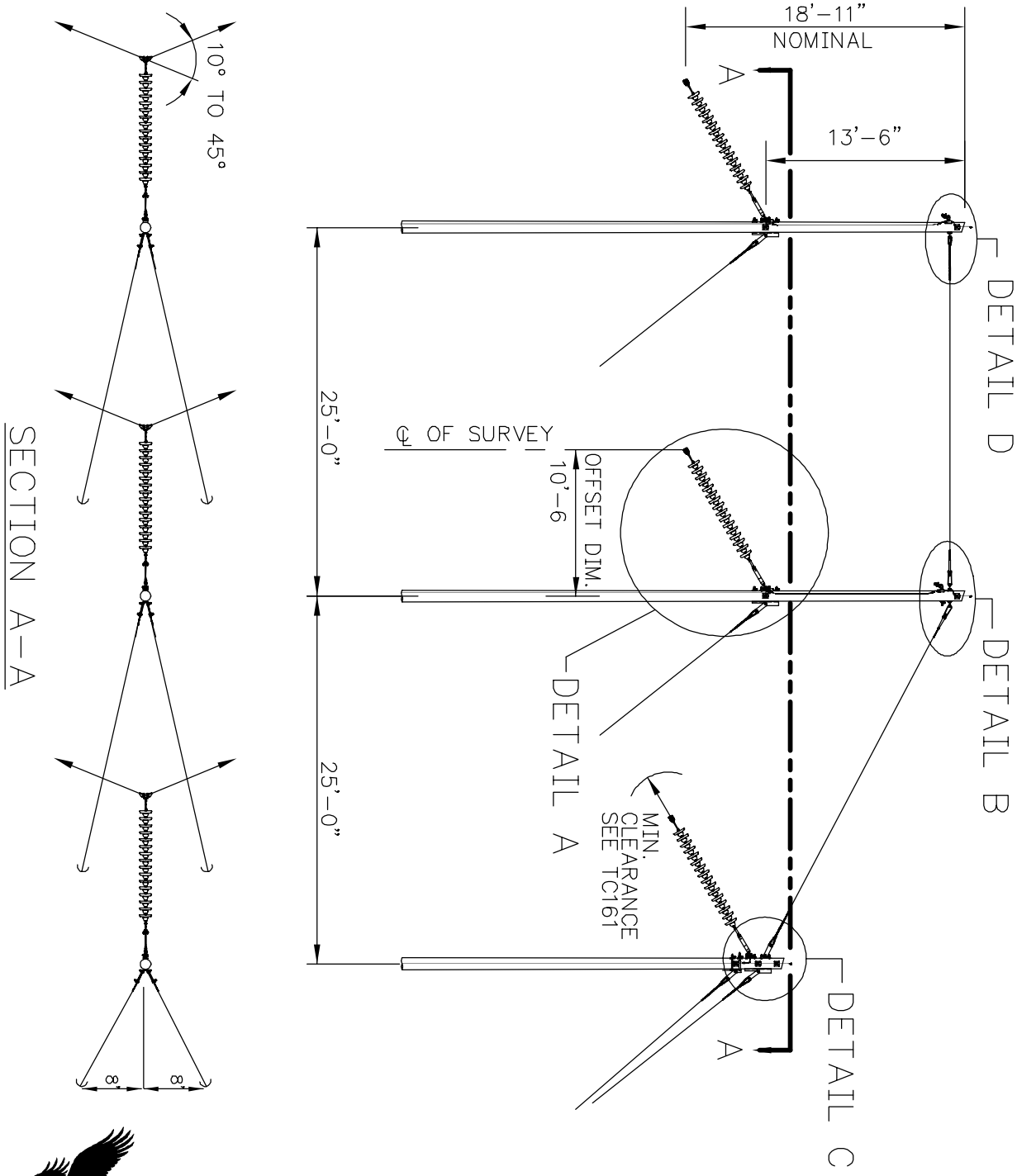

May be used
In raptor areas

PACIFICORP
A MIDAMERICAN ENERGY HOLDINGS COMPANY

TI 435
Page 2 of 4

24 Jul 07

230 kV Structure Shielded, 3-Pole Angle, 30° to 45°

Transmission Construction Standard

© 2007 by PacifiCorp. All rights reserved.

Engineer (C. Wright): CLW

Standards Manager (G. Lyons): GS

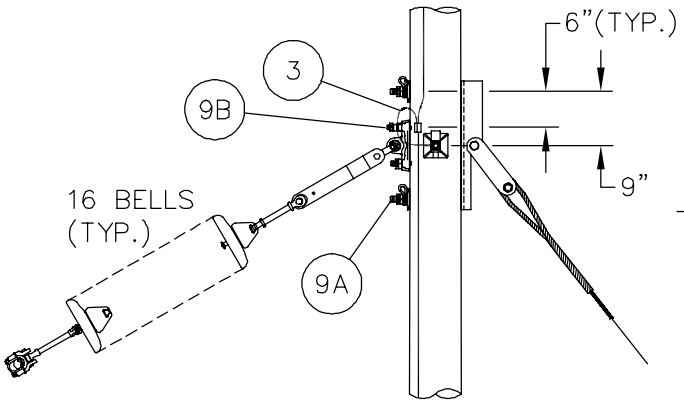

DETAIL A

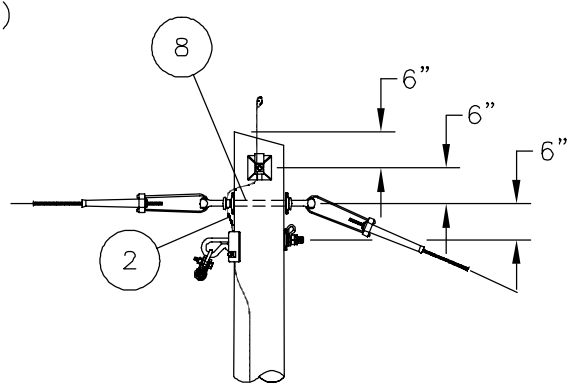

DETAIL B

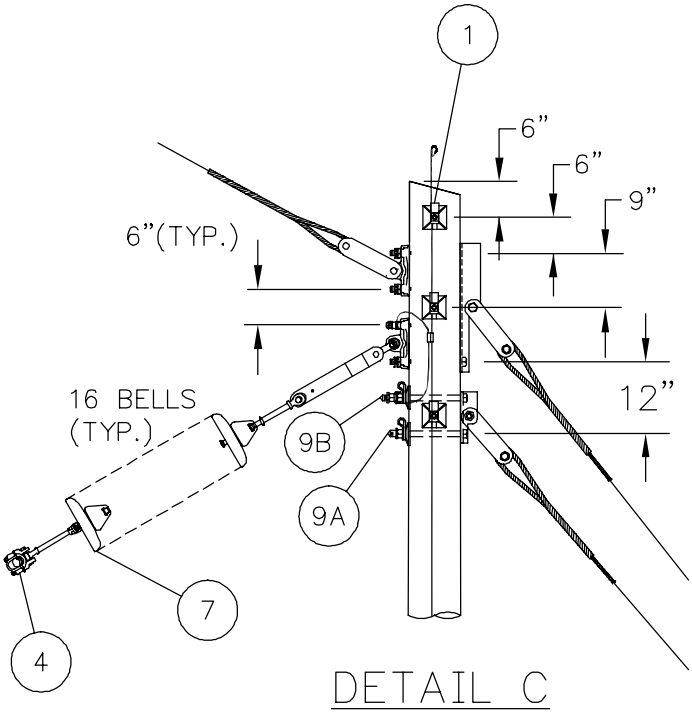

DETAIL C

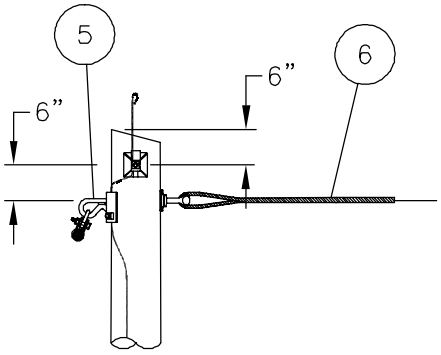

DETAIL D

Transmission Construction Standard

© 2007 by PacifiCorp. All rights reserved.

Engineer (C. Wright): CLW

Standards Manager (G. Lyons): GS

230 kV Structure Shielded, 3-Pole Angle, 30° to 45°

PACIFICORP
A MIDAMERICAN ENERGY HOLDINGS COMPANY

24 Jul 07

TI 435

Table 1 – Components

Item	Qty.	Standard	Description
1	7	TD 022_	Pole Assembly, Split-Bolt, 3/4″ Diameter
2	6	TD 321C E	Grounding Assembly, Hardware-to-Hardware
3	4	TD 322E	Grounding Assembly, Hardware-to-Structure Ground
4	3	TD 420_ _ E	Suspension Assembly, Conductor
5	2	TD 425_ _ B	Suspension Assembly, Shield Wire
6	1	TD 540_ F B	Tie Wire Assembly
7	3	TD 827E _ A	Insulator Assembly, Suspension, with Link and Y-Clevis-Eye
8	1	TD 921_ D	Bolt Assembly, Double-Arming, 3/4-Inch
9A	5	TD 928_ A	Bolt Assembly, Machine, 1-Inch
9B	9	TD 928_ D	Bolt Assembly, Machine, 1-Inch

Table 2 – Additional Material To Be Specified To Complete This Structure

Item	Qty.	Standard	Description
A	3	TD 020_ _ A	Wood Pole Assembly
B	3	TD 625_ _ _ _	Guy Assembly, 4-Bolt Splayed Channel Pole Attachment
C	1	TD 624_ _ _ _	Guy Assembly, 2-Bolt Splayed Channel Pole Attachment
D	AS REQ	TD 630_ _ _	Anchor Assembly

Notes

1. All hardware is to be bonded when it is separated by less than 8 inches. Bond wire shall loop around the bolt.
2. Install spring washers with loop end up where possible.
3. All pole attachment hardware shall be bonded to the pole grounding assembly.
4. Clearance between the conductor and the structure shall be maintained under reverse wind conditions.
5. Class 1 or better poles are recommended.

© 2007 by PacifiCorp. All rights reserved.

TI 451 _ _ _ _ _

RCMS Code: CU

May be used
In raptor areas

230 kV Structure—Shielded, 3-Pole—Dead-End, 10° to 65°

Scope

This structure is used for deadends with line angles up to 65° when shielding is required.

Line Angle: 10° to 65°

Standard References

TD 001	*Poles—General Information*
TD 100	*Conductor—General Information*
TD 200	*Shield and Guy Wire—General Information*
TD 300	*Grounding—General Information*
TD 500	*Tension Hardware—General Information*
TD 600	*Guys and Anchors—General Information*
TD 700	*Crossarms and Braces—General Information*
TD 800	*Insulators—General Information*
TD 900	*Bolts, Nuts, and Washers—General Information*

Conductor	Code
795 ACSR “Drake”	D
954 ACSR “Cardinal”	E
1272 ACSR “Bittern”	F
795 AAC “Arbutus”	G
1272 AAC “Narcissus”	H
None	Z

Conductor Accessories	Code
Tension Hardware Compression Fittings	
Jumper w/armor rod	C
Jumper w/o armor rod	D
Tension Hardware Bolted Fittings	
Jumper w/armor rod	E
Jumper w/o armor rod	F
None	Z

Shield Wire	Code
3/8 EHS	A
1/2 EHS	B
7#8 AW	C
7#6 AW	D
None	Z

Insulation	Code
Porcelain	A
Polymer	B

Pole Class	Species	Code
3	Douglas fir	A
2	Douglas fir	B
1	Douglas fir	C
H1	Douglas fir	D
H2	Douglas fir	E
3	Western red cedar	F
2	Western red cedar	G
1	Western red cedar	H
H1	Western red cedar	I
H2	Western red cedar	J

© 2004 by PacifiCorp. All rights reserved.

TI 451

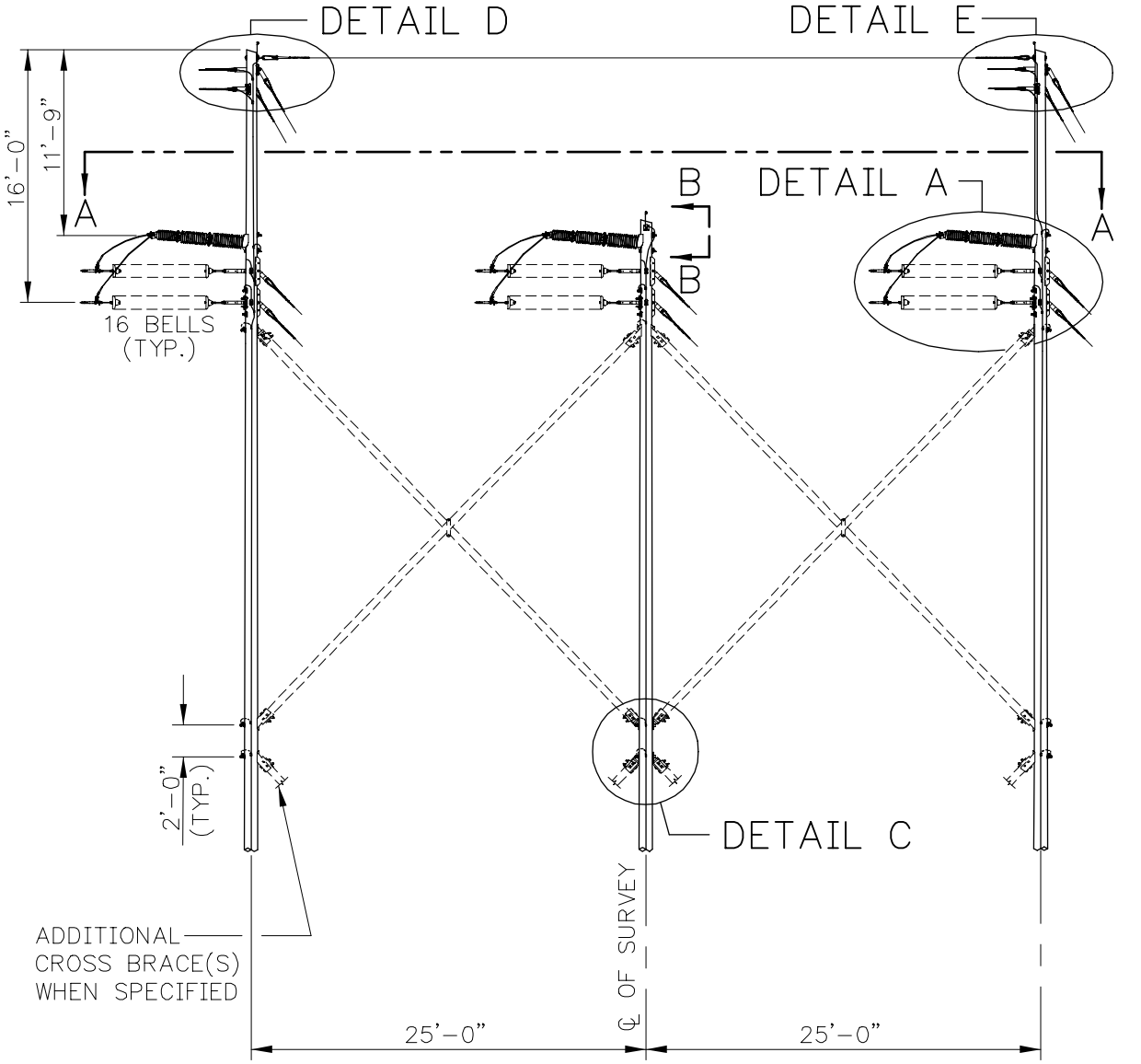

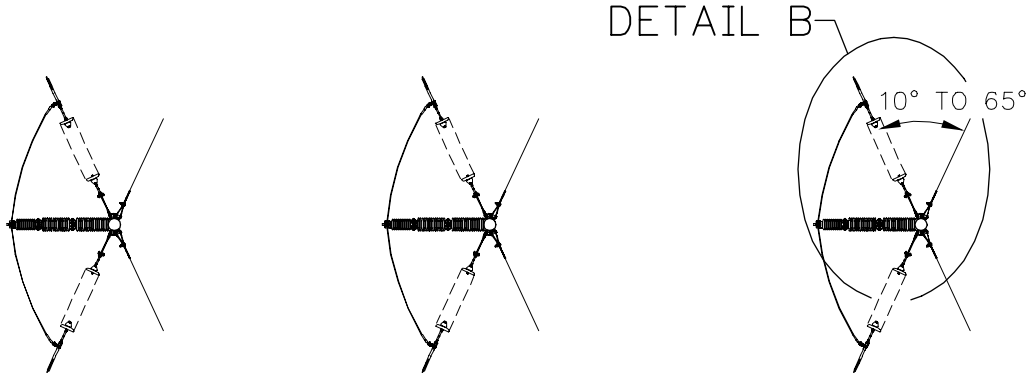

May be used
In raptor areas

SECTION A–A

PACIFICORP		230 kV Structure—Shielded, 3-Pole—Dead-End, 10° to 65°	Transmission Construction Standard
TI 451 Page 2 of 6	28 Apr 04		Engineer (C. Wright): CLW Standards Manager (G. Shaw):

© 2004 by PacifiCorp. All rights reserved.

(*) 1'–0" POLYMER INSUL.

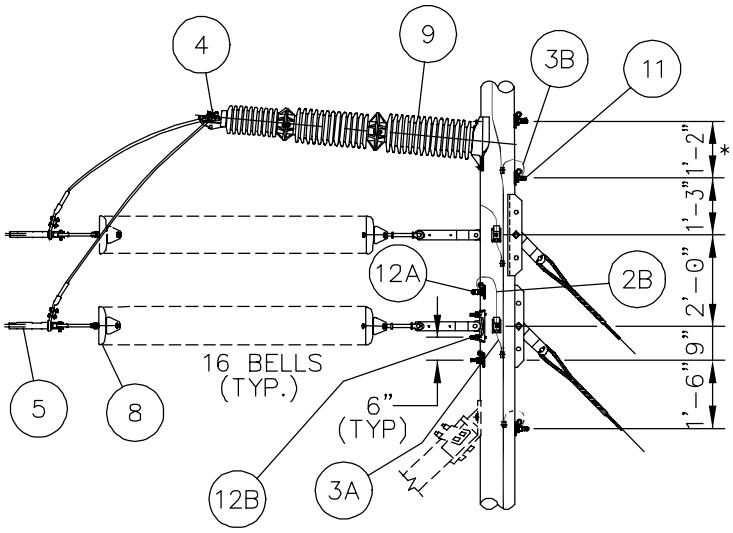

DETAIL A

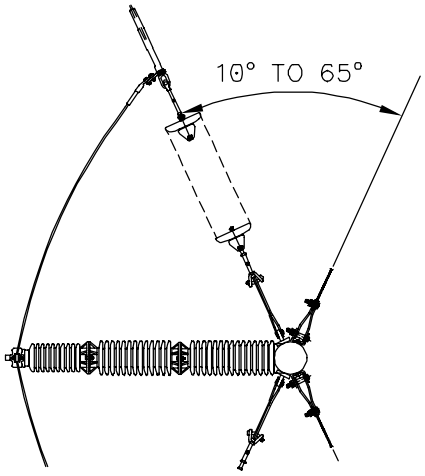

DETAIL B

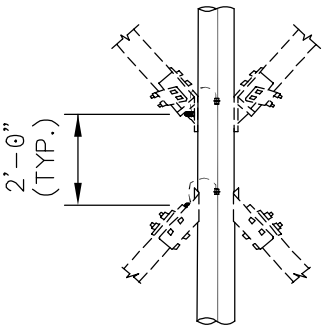

DETAIL C

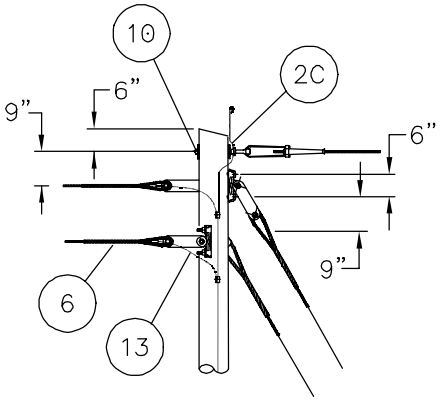

DETAIL D

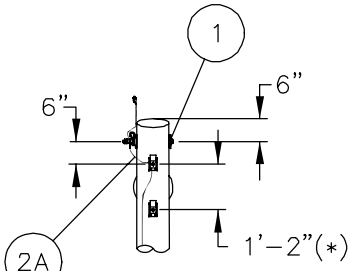

(*) 1'–0" POLYMER INSUL.

SECTION B–B

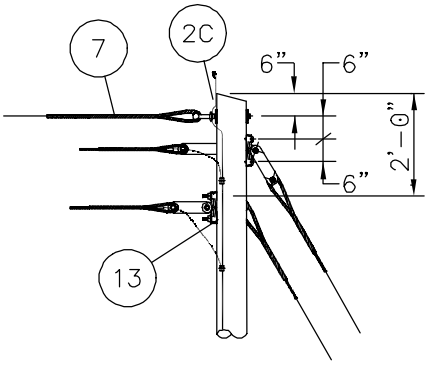

DETAIL E

Transmission Construction Standard

© 2004 by PacifiCorp. All rights reserved.

Engineer (C. Wright): CLW

Standards Manager (G. Shaw):

230 kV Structure—Shielded, 3-Pole—Dead-End, 10° to 65°

PACIFICORP

28 Apr 04

TI 451

Table 1 – Components

Item	Qty.	Standard	Description
1	7	TD 022_	Pole Assembly, Split-Bolt, 3/4″ Diameter
2A	1	TD 321C D	Grounding Assembly, Hardware-to-Hardware
2B	6	TD 321E Z	Grounding Assembly, Hardware-to-Hardware
2C	2	TD 321C Z	Grounding Assembly, Hardware-to-Hardware
3A	6	TD 322C	Grounding Assembly, Hardware-to-Structure Ground
3B	2	TD 322D	Grounding Assembly, Hardware-to-Structure Ground
4	3	TD 420_ _ A	Suspension Assembly, Conductor
5	6	TD 520_ _	Tension Assembly, Conductor
6	4	TD 525_ A	Tension Assembly, Shield Wire, Guy Grip
7	1	TD 540_ E A	Tie Wire Assembly
8	6	TD 826E _ A	Insulator Assembly, Dead-End, with 15″ Link
9	3	TD 831G	Insulator, Post, Horizontal, Polymer
9	3	TD 835F	Insulator, Post, Horizontal, Porcelain
10	2	TD 926_ F	Bolt Assembly, Machine, 3/4-Inch
11	6	TD 927_ A	Bolt Assembly, Machine, 7/8-Inch
12A	12	TD 928_ A	Bolt Assembly, Machine, 1-Inch
12B	20	TD 928_ D	Bolt Assembly, Machine, 1-Inch
13	4	TD 325_	Grounding Assembly, Shield Wire-to-Pole Ground

Table 2 – Additional Material to Be Specified to Complete this Structure

Item	Qty.	Standard	Description
A	3	TD 020_ _ A	Wood Pole Assembly
B	4	TD 622B_ _ _	Guy Assembly, Dead-End Tee Pole Attachment
C	6	TD 623_ _ _ _	Guy Assembly, 4–Bolt Channel Pole Attachment
D	6	TD 627_ _ _ _	Guy Assembly, Bent Link Attachment
E	AS REQ	TD 630_ _ _	Anchor Assembly
F	1	TD 774F_B A _	Brace, Cross, Wood Assembly with Double Bolt Connection

© 2004 by PacifiCorp. All rights reserved.

Notes

1. All hardware is to be bonded when it is separated by less than 8 inches. Bond wire shall loop around the bolt. All pole attachment hardware shall be bonded to the pole grounding assembly.
2. Install spring washers with loop end up where possible.
3. In contaminated areas, use TD 840, code “F” for post insulators.
4. Class 1 or better poles are recommended.

© 2004 by PacifiCorp. All rights reserved.

Engineer (C. Wright): CLW
Standards Manager (G. Shaw):

230 kV Structure—Shielded, 3-Pole—Dead-End, 10° to 65°

PACIFICORP

28 Apr 04

TI 251 _ _ _ _ _

RCMS Code: CU

230 kV Structure—Shielded, Single-Circuit—Dead-End, 15° to 65°

May be used
In raptor areas

Scope

This structure is used for strain deadends with line angles up to 65° when shielding is required.

Line Angle: 15° to 65°

Standard References

TD 001	*Poles—General Information*
TD 100	*Conductor—General Information*
TD 200	*Shield and Guy Wire—General Information*
TD 300	*Grounding—General Information*
TD 500	*Tension Hardware—General Information*
TD 600	*Guys and Anchors—General Information*
TD 800	*Insulators—General Information*
TD 900	*Bolts, Nuts, and Washers—General Information*

Conductor	Code
1/0 ACSR “Raven”	A
4/0 ACSR “Penguin”	B
397.5 ACSR “Ibis”	C
795 ACSR “Drake”	D
954 ACSR “Cardinal”	E
1272 ACSR “Bittern”	F
795 AAC “Arbutus”	G
1272 AAC “Narcissus”	H
None	Z

Conductor Accessories	Code
Suspension Hardware	
Armor rod	A
Line guard	B
None	Z
Tension Hardware Compression Fittings	
Jumper w/armor rod	C
Jumper w/o armor rod	D
Tension Hardware Bolted Fittings	
Jumper w/armor rod	E
Jumper w/o armor rod	F

Shield Wire	Code
3/8 EHS	A
1/2 EHS	B
7#8 AW	C
7#6 AW	D
3/8 EHS w/AGS	E
1/2 EHS w/AGS	F
7#8 AW w/AGS	G
7#6 AW w/AGS	H
3/8 EHS w/armor rod	I
1/2 EHS w/armor rod	J
7#8 AW w/armor rod	K
7#6 AW w/armor rod	L
None	Z

Insulation	Code
Porcelain	A
Polymer	B

Pole Class	Species	Code
3	Douglas fir	A
2	Douglas fir	B
1	Douglas fir	C
H1	Douglas fir	D
H2	Douglas fir	E
3	Western red cedar	F
2	Western red cedar	G
1	Western red cedar	H
H1	Western red cedar	I
H2	Western red cedar	J

TI 251

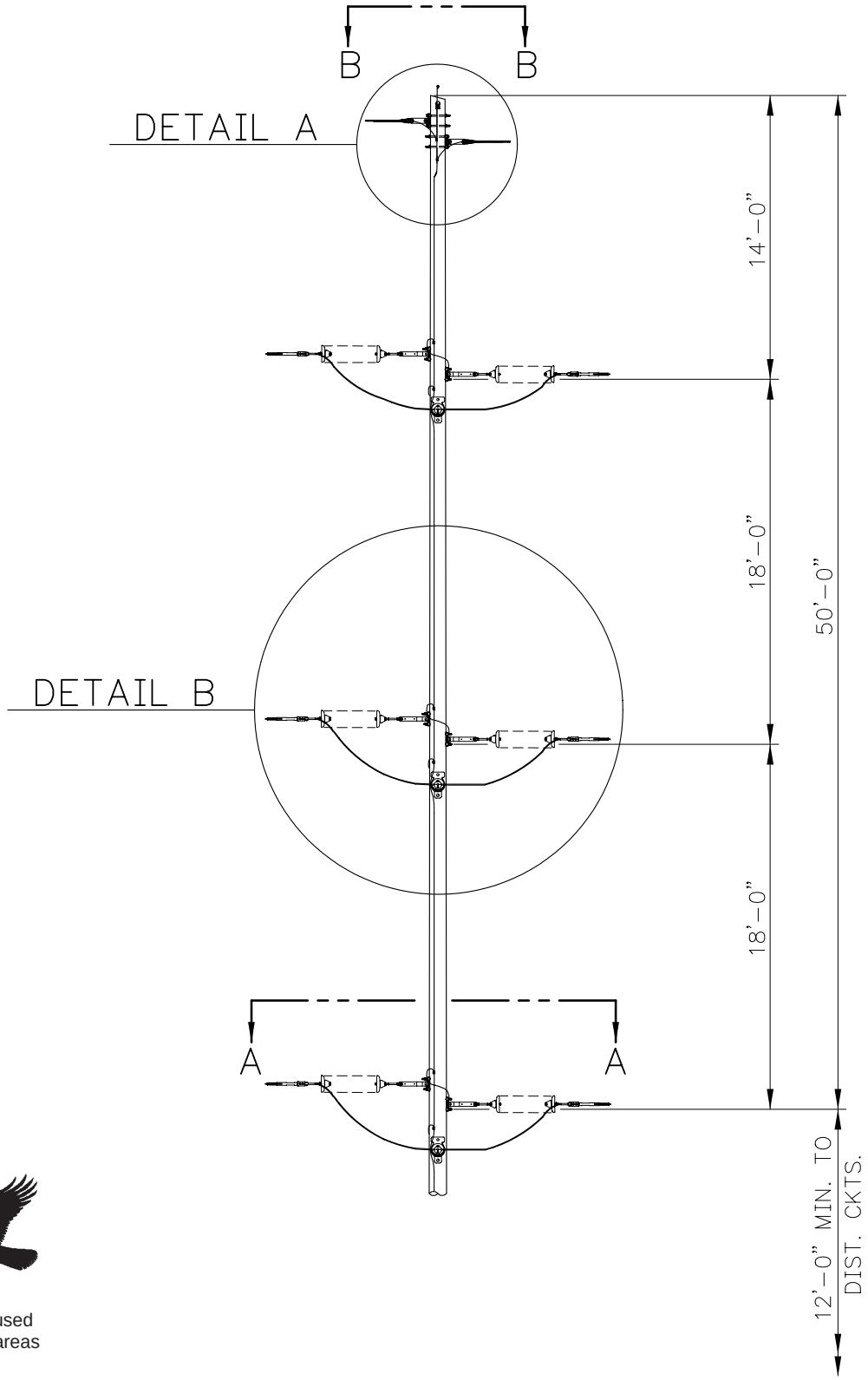

May be used
In raptor areas

PACIFICORP PACIFIC POWER UTAH POWER		230 kV Structure Shielded, Single-Circuit Dead-End, 15° to 65°	Transmission Construction Standard
TI 251 Page 2 of 4	17 Mar 97		Stds Team Leader (C. L. Wright): CLW Standards Services (M. Brimhall): MMB

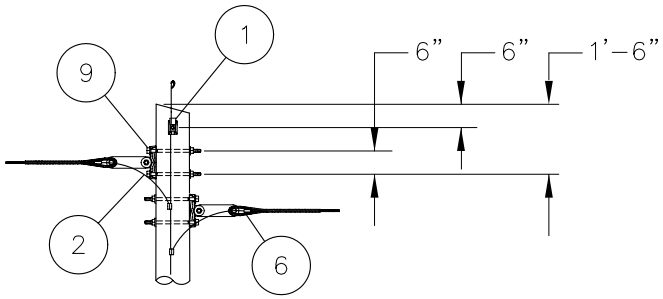

DETAIL A

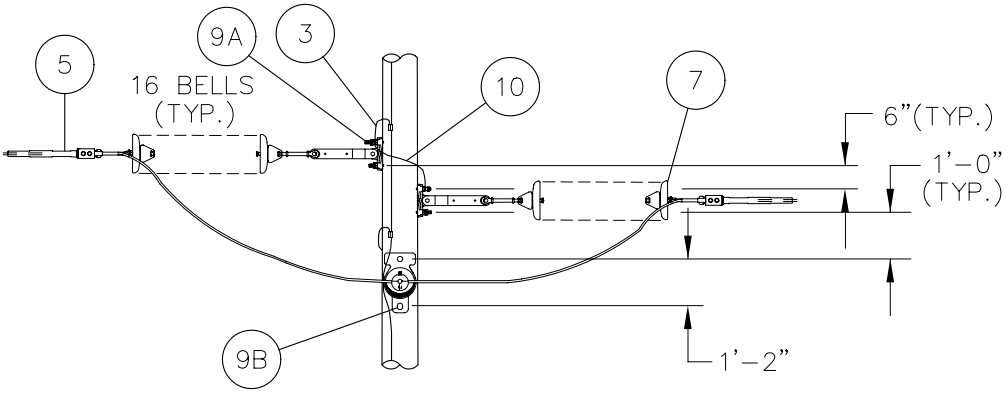

DETAIL B

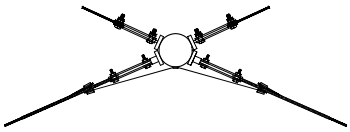

SECTION B-B

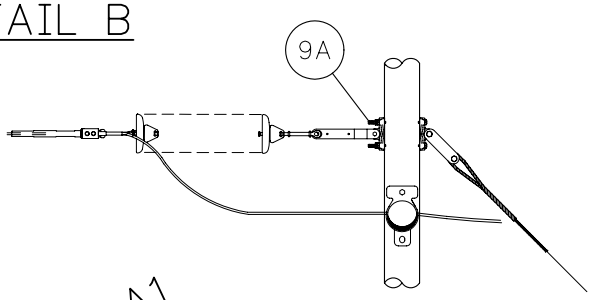

SECT. A1-A1

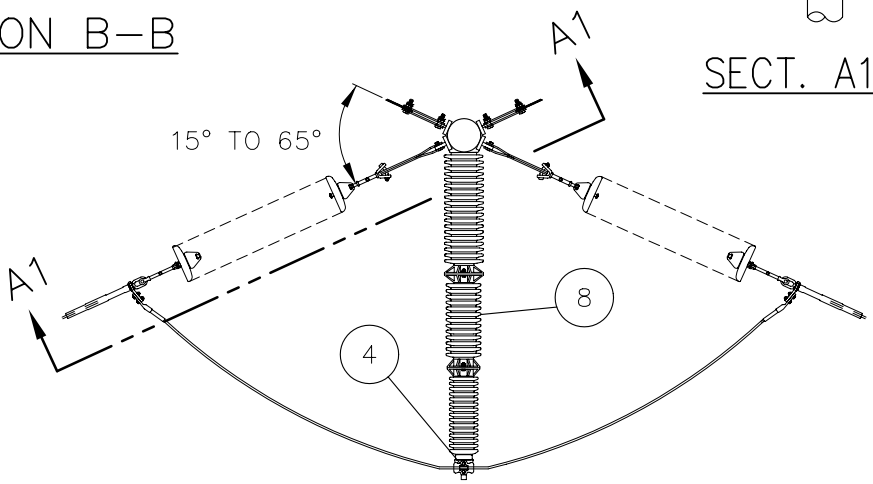

SECTION A-A

Transmission Construction Standard	230 kV Structure Shielded, Single-Circuit Dead-End, 15° to 65°	PACIFICORP PACIFIC POWER UTAH POWER	
Stds Team Leader (C. L. Wright): CLW Standards Services (M. Brimhall): MMB		17 Mar 97	TI 251 Page 3 of 4

Table 1 – Components

Item	Qty.	Standard	Description
1	1	TD 022_	Pole Assembly, Split-Bolt, 3/4” Diameter
2	2	TD 325_	Grounding Assembly, Shield Wire–to–Pole Ground
3	6	TD 322E	Grounding Assembly, Hardware-to-Structure Ground
4	3	TD 420_ _ A	Suspension Assembly, Conductor
5	6	TD 520_ _	Tension Assembly, Conductor
6	2	TD 525_ A	Tension Assembly, Shield Wire, Guy Grip
7	6	TD 826E _ A	Insulator Assembly, Dead-End, with Link
8	3	TD 831F	Insulator, Post, Horizontal, Polymer
8	3	TD 835F	Insulator, Post, Horizontal, Porcelain
9A	16	TD 928_ D	Bolt Assembly, Machine, 1-Inch
9B	6	TD 928_ E	Bolt Assembly, Machine, 1-Inch
10	4	TD 321E Z	Grounding Assembly, Hardware–to–Hardware

Table 2 – Additional Material To Be Specified To Complete This Structure

Item	Qty.	Standard	Description
A	1	TD 020_ _ A	Wood Pole Assembly
B	8	TD 620A _ _ _	Guy Assembly
C	AS REQ	TD 630_ _ _	Anchor Assembly

Notes

1. All hardware is to be bonded when it is separated by less than 8 inches. Bond wire shall loop around the bolt.
2. Install spring washers with loop end up where possible.
3. All pole attachment hardware shall be bonded to the pole grounding assembly.
4. In contaminated areas, use TD 840, code “F” for post insulators.
5. Class 1 or better pole is recommended.

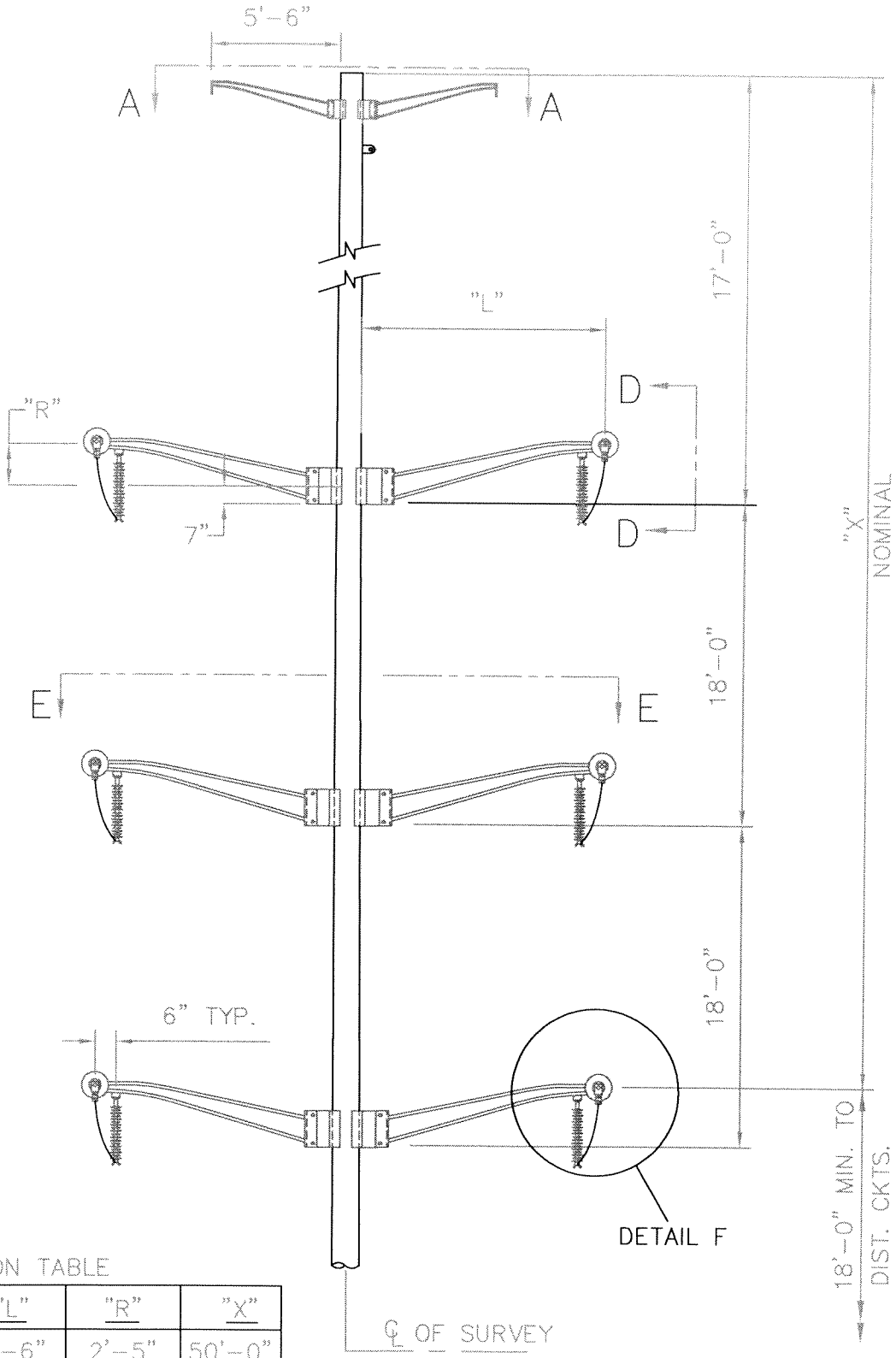

DIMENSION TABLE

LINE ANGLE	"L"	"R"	"X"
0°-30°	9'-6"	2'-5"	50'-0"
30°-60°	10'-6"	2'-9"	49'-8"
60°-90°	12'-6"	3'-5"	49'-0"

REV	DATE	DESC.	BY	CHK	APP

ER/PR		230KV STRUCTURE SHIELDED, D. C. DEADEND, 0° TO 90°, STEEL POLE W/ DAVIT ARMS	PACIFICORP PACIFIC
DATE	6 SEPT 06		
ENG	DES		SHEET 1 of 2 / SCALE NONE
DR	CH		
APP			T1285 / REV. 0

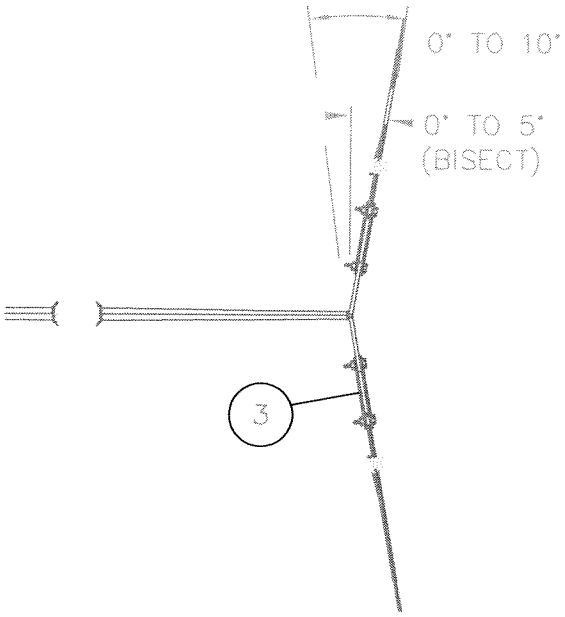

SECTION A–A

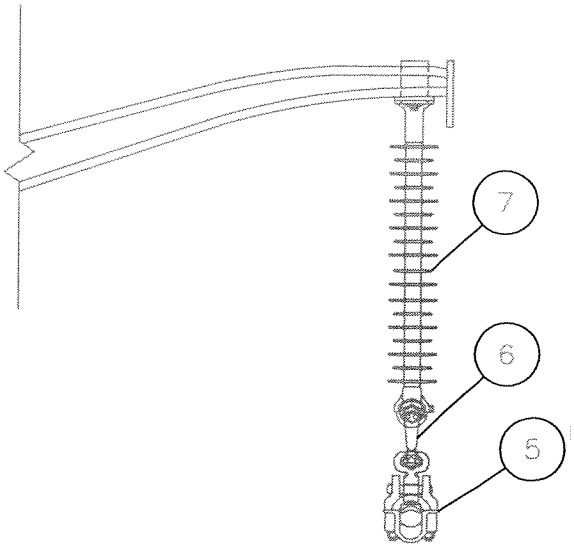

DETAIL F

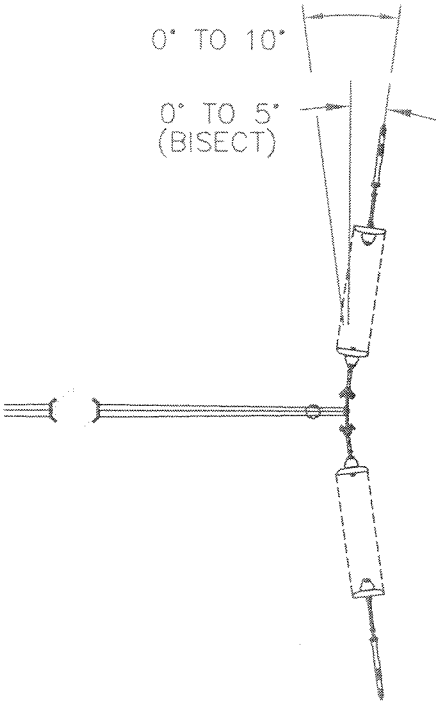

SECTION E–E

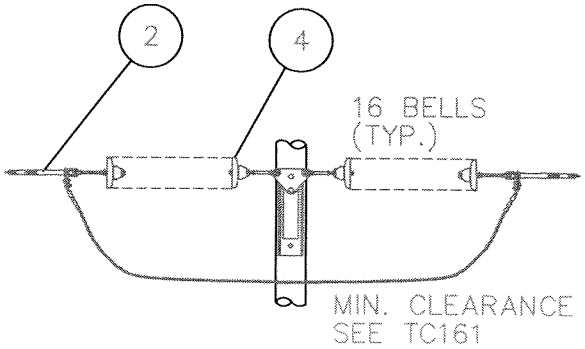

SECTION D–D

(TYPICAL)

REV	DATE	DESC.	BY	CHK	APP

ER/PR		230KV STRUCTURE SHIELDED D. C. DEAD–END, 0° TO 90°, STEEL POLE W/ DAVIT ARMS	PACIFICORP PACIFIC
DATE	9/6/06		
ENG	DES		SHEET 2 of 2 / SCALE NONE
DR	CH		
APP			TI285F2 / REV. 1

TI 403 _ _ _ _ _

RCMS Code: CU

May be used
In raptor areas

230 kV Structure—Shielded, H Frame—Tangent, with Steel Truss

Scope

This structure is used when shielding is required.

Line Angle: 0° to 1°

Standard References

TD 001	*Poles—General Information*
TD 100	*Conductor—General Information*
TD 200	*Shield and Guy Wire—General Information*
TD 300	*Grounding—General Information*
TD 400	*Suspension Hardware—General Information*
TD 700	*Crossarms and Braces—General Information*
TD 800	*Insulators—General Information*
TD 900	*Bolts, Nuts, and Washers—General Information*

Conductor	Code
1/0 ACSR “Raven”	A
4/0 ACSR “Penguin”	B
397.5 ACSR “Ibis”	C
795 ACSR “Drake”	D
954 ACSR “Cardinal”	E
1272 ACSR “Bittern”	F
795 AAC “Arbutus”	G
1272 AAC “Narcissus”	H
None	Z

Conductor Accessories	Code
Suspension Hardware	
Armor rod	A
Line guard	B
None	Z
~~Tension Hardware Compression Fittings~~	
~~Jumper w/armor rod~~	~~C~~
~~Jumper w/o armor rod~~	~~D~~
~~Tension Hardware Bolted Fittings~~	
~~Jumper w/armor rod~~	~~E~~
~~Jumper w/o armor rod~~	~~F~~

Shield Wire	Code
3/8 EHS	A
1/2 EHS	B
7#8 AW	C
7#6 AW	D
3/8 EHS w/AGS	E
1/2 EHS w/AGS	F
7#8 AW w/AGS	G
7#6 AW w/AGS	H
3/8 EHS w/armor rod	I
1/2 EHS w/armor rod	J
7#8 AW w/armor rod	K
7#6 AW w/armor rod	L
None	Z

Insulation	Code
Porcelain	A
Polymer	B

Pole Class	Species	Code
3	Douglas fir	A
2	Douglas fir	B
1	Douglas fir	C
H1	Douglas fir	D
H2	Douglas fir	E
3	Western red cedar	F
2	Western red cedar	G
1	Western red cedar	H
H1	Western red cedar	I
H2	Western red cedar	J

TI 403

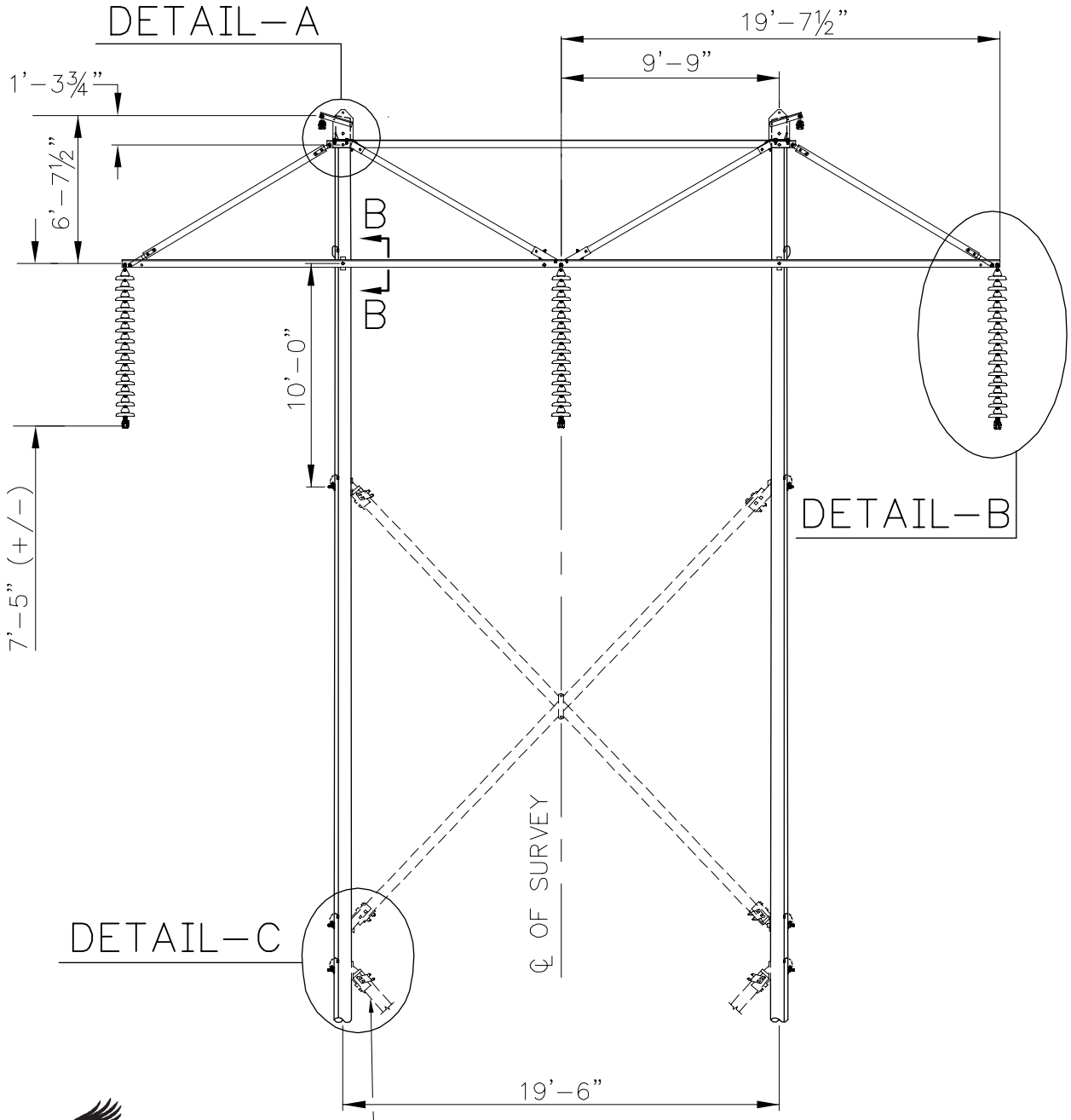

May be used
In raptor areas

PACIFICORP PACIFIC POWER UTAH POWER		**230 kV Structure Shielded, H Frame Tangent, with Steel Truss**	**Transmission Construction Standard**
TI 403 Page 2 of 4	27 May 97		Stds Team Leader (C. L. Wright): CLW Standards Services (M. Brimhall): MWB

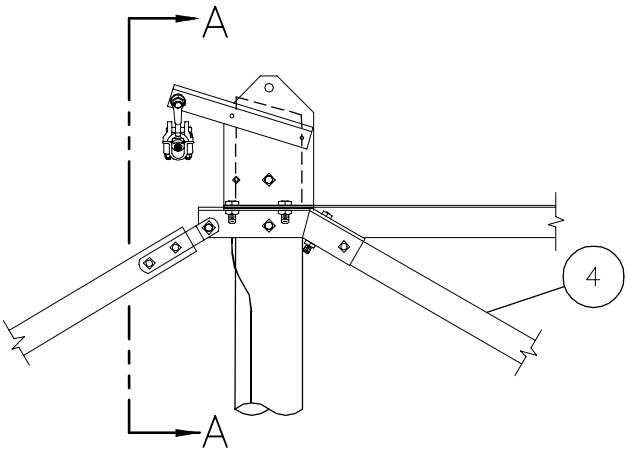

DETAIL A

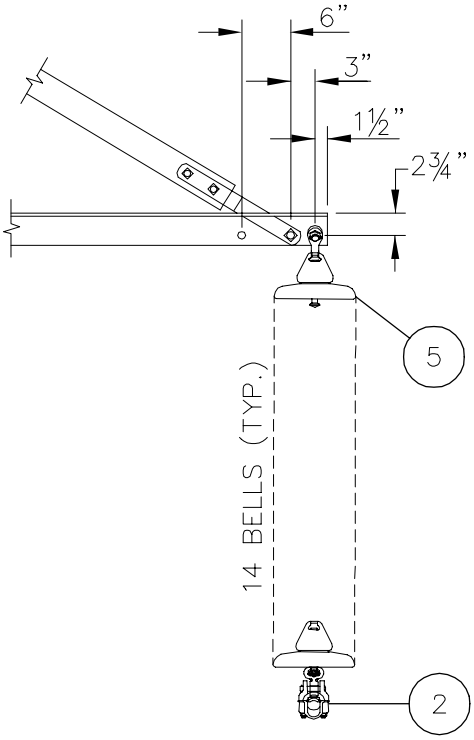

DETAIL B

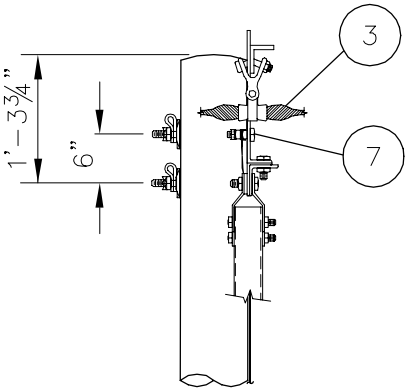

SECTION A–A

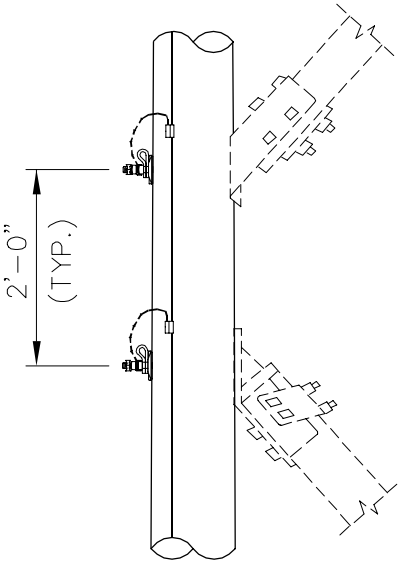

DETAIL C

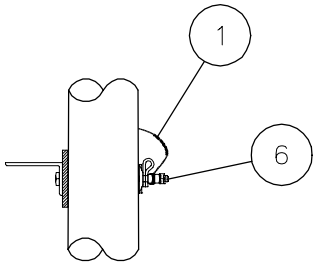

SECTION B–B

Transmission Construction Standard	230 kV Structure Shielded, H Frame Tangent, with Steel Truss	PACIFICORP PACIFIC POWER UTAH POWER	
Stds Team Leader (C. L. Wright): CLW Standards Services (M. Brimhall): MMB		27 May 97	TI 403 Page 3 of 4

Table 1 – Components

Item	Qty.	Standard	Description
1	2	TD 322D	Grounding Assembly, Hardware-to-Structure Ground
2	3	TD 420_ _ C	Suspension Assembly, Conductor
3	2	TD 425_ _ C	Suspension Assembly, Shield Wire
4	1	TD 728C	Arm Assembly, Suspension, Steel Truss
5	3	TD 824E _	Insulator Assembly, Suspension, Tangent
6	6	TD 927_ A	Bolt Assembly, Machine, 7/8-Inch
7	2	TD 361Z	Grounding Clip

Table 2 – Additional Material To Be Specified To Complete This Structure

Item	Qty.	Standard	Description
A	2	TD 020_ _ A	Wood Pole Assembly
B	1 or More	TD 774A _ A A	Brace, Cross, Wood Assembly with Double Bolt Connection

Notes

1. All hardware is to be bonded when it is separated by less than 8 inches. Bond wire shall loop around the bolt.
2. Install spring washers with loop end up where possible.
3. All pole attachment hardware shall be bonded to the pole grounding assembly.

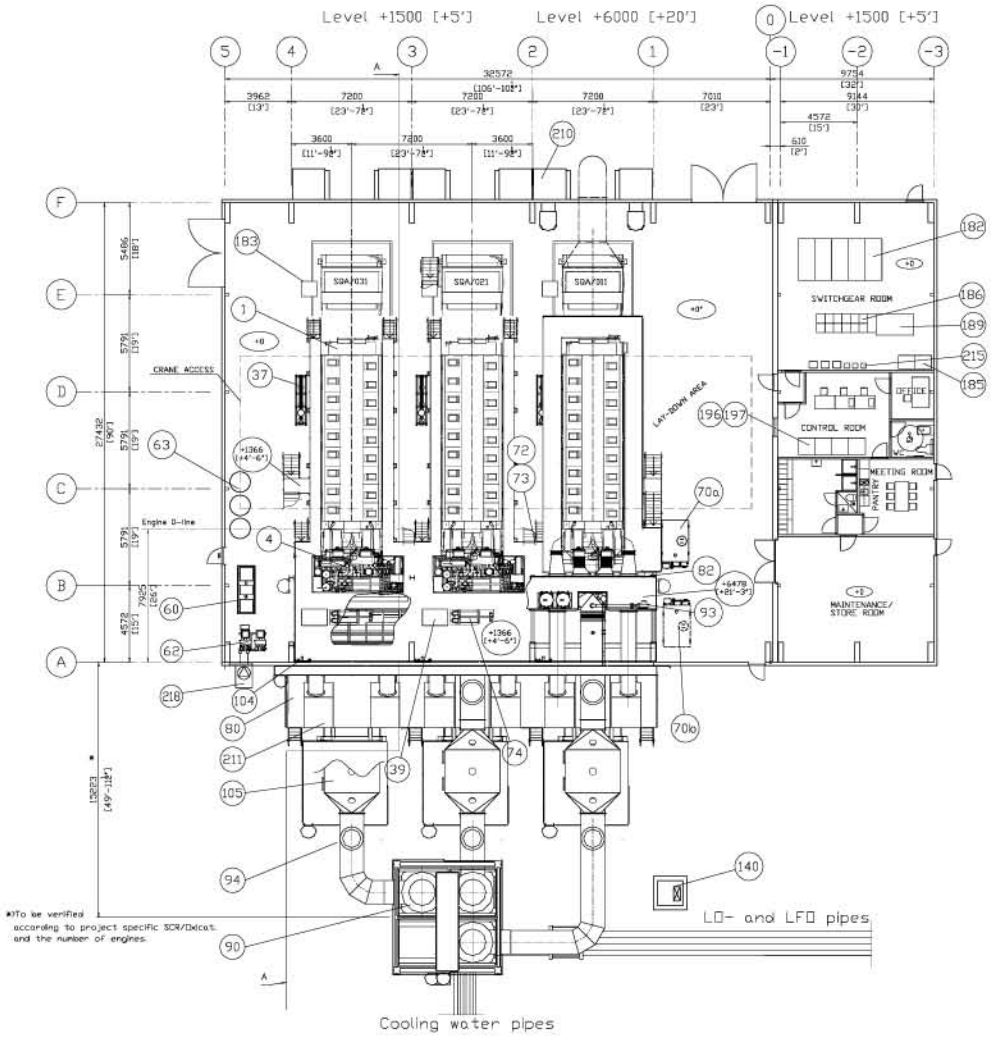

ENGINE HALL & UTILITY BLOCK

Item No	Pcs.	Code (First)	DESCRIPTION	WEIGHT/lb Incl. liquids kg	lb	MOUNTING LEVEL millim.	(Floor level) inch.
1	3	SQA	Engine generator set	363 ton	800 ton	+0.000	0'- 0"
4	3	QEA	Pipe module		-	+0.000	0'- 0"
37	3	ZBB	Gas regulating unit		-	+0.000	0'- 0"
39	3		Additional preheater (optional)		-	+0.000	0'- 0"
60	1	TCA	Working air unit		-	+0.000	0'- 0"
62	1	TSA	Starting air unit		-	+0.000	0'- 0"
63	3	TSB	Starting air bottle 3000l/793 gal		-	+0.000	0'- 0"
70a	1	VBA	Maintenance water tank 5m3/1321gal		-	+0.000	0'- 0"
70b	1	VBA	Glycol tank 5m3/1321gal (optional)		-	+0.000	0'- 0"
72	3	VEA	LT-water expansion vessel 600l/159gal		-	+6.250	20'-6"
73	3	VEA	HT-water expansion vessel 600l/159gal	glycol (optional)		+6.250	20'-6"
74	3	VGB	Central cooler (optional)		-	+550	1-10"
80	6	NGA	Charge air filter		-	+915	3'-0"
82	3		Charge air & Exhaust gas module				
93	3	NHA	Exhaust gas ventilation unit		-	+6.250	20'-6"
104	3	YCA	Urea dosing unit (optional)		-		-
182	-	BAC	MV Switchgear		-	+0.000	0'- 0"
183	3	BAN	Neutral point cubicle		-	+0.000	0'- 0"
185	2	BEY	DC-Unit		-	+0.000	0'- 0"
186	-	BFA	LV switchboard		-	+0.000	0'- 0"
189	1	BFB	Station transformer		-	+0.000	0'- 0"
196	1	CFA	Control panel, common		-	+0.000	0'- 0"
197	3	CFC	Control panel, engine wise		-	+0.000	0'- 0"
210	6		Ventilation unit (enginehall)		-	+0.000	0'- 0"
211	3		Ventilation unit (aux. area)		-	+1.470	4'- 10"
215	6		Frequency converter		-	+0.000	0'- 0"
218	1		Ventilation unit for compressor		-	+0.000	0'- 0"

MECHANICAL UTILITY AREA

Item No	Pcs.	Code (First)	DESCRIPTION	WEIGHT/kg Incl. liquids kg	lb	MOUNTING LEVEL millim.	(Floor level) inch.
71	15	VCA	Radiator		-	-	-
90	3	NHA	Exhaust gas silencer		-	+4.470	14'-8"
94	6	NGA	Rupture disc		-	-	-
105	3		SCR/OXI-CAT (Optional)		-	+3.962	13'-0"
106	1		SCR gas analyzer (Optional)		-	+0.000	0'-0"
140	1	DAA	Oily water collecting pit		-	-	-

FOR TENDERING ONLY

WÄRTSILÄ

© Wärtsilä Finland Oy Power Plants

MASTER LAYOUT, PLAN
ENGINE HALL
18V50DF GAS POWER PLANT
3x18V50DF

Product 18V50DF | ACA | UNITS mm [in]

MADE	15.9.2003	MMy/Myllymäki	ASLY.DRG -		
CHKD	15.9.2003	KVA/Vilto-aho	SCALE 1:150	SIZE A1	Page No. 1/1
APPD	29.9.2003	MJJ/Juopperi			

DRG. No. WDAAA294490 a Rev.

This drawing is the property of Wärtsilä NSD Corp. and shall neither be copied, shown nor communicated to a third party without the consent of the owner.

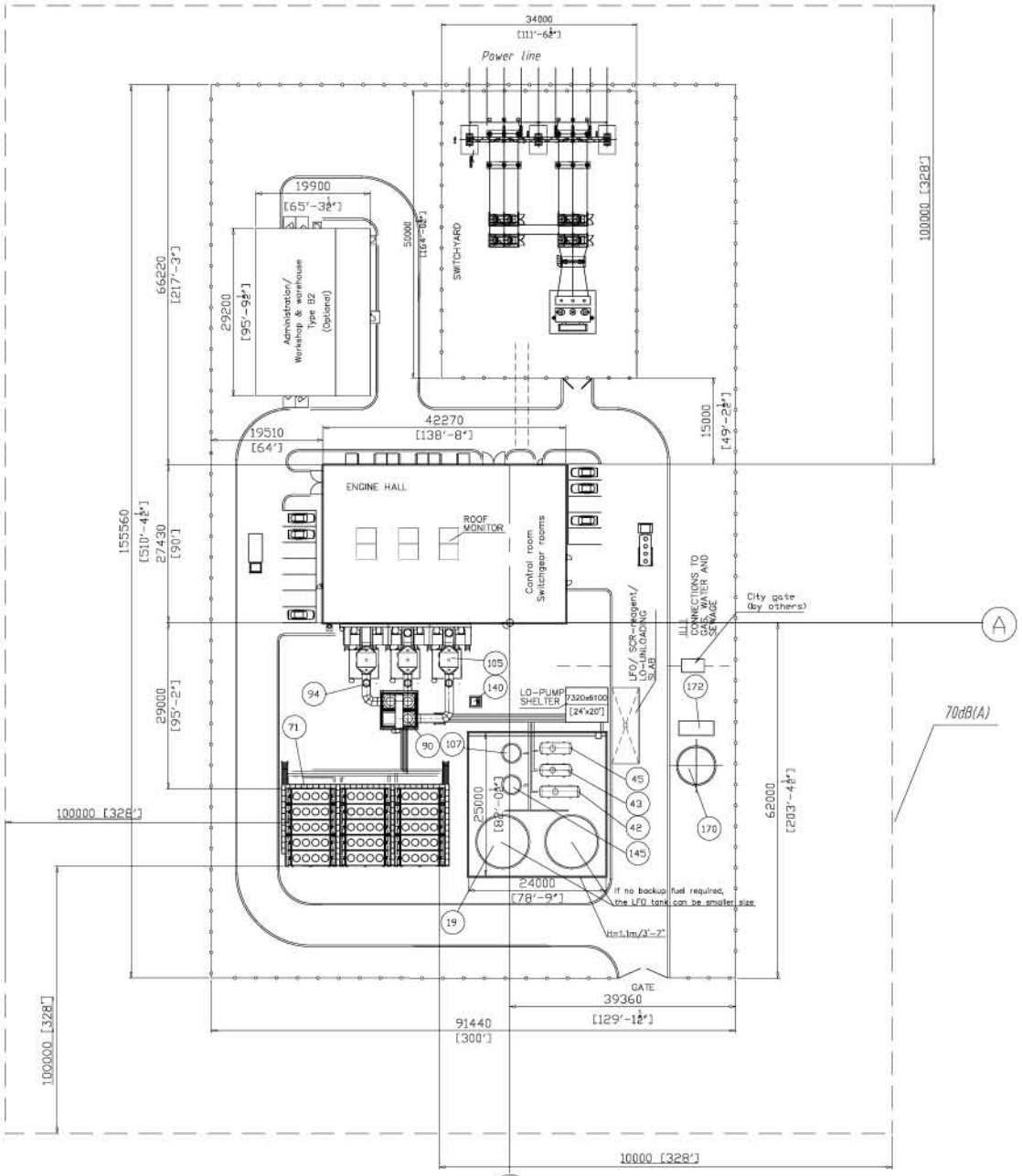

MECHANICAL UTILITY AREA

Item No	Pcs.	Code (First)	DESCRIPTION	WEIGHT Incl. liquids kg	lb	MOUNTING LEVEL millim.	(Floor level) inch.
71	15	VCA	Radiator		–	–	–
90	3	NHA	Exhaust gas silencer		–	4470	14'-8"
94	6	NGA	Rupture disc		–	–	–
105	3		SCR/OXI-CAT (Optional)		–	3962	13'-0"
106	1		SCR gas analyzer (Optional)		–	0	0'-0"
140	1	DAA	Oily water collecting pit/separator		–	–	–
170	1	VFB	Fire / raw water tank		–	–	–
172	1		Fire fighting container		–	–	–

DAY / STORAGE TANK / UNLOADING AREA

Item No	Pcs.	Code (First)	DESCRIPTION	WEIGHT Incl. liquids kg	lb	MOUNTING LEVEL millim.	(Floor level) inch.
19	2	PAE	LFO storage tank 500m3/132085gal		–		–
42	1	QAC	Clean LO tank 20m3/5284gal		–		–
43	1	QAD	Used LO tank 16m3/4227gal		–		–
45	1	QAM	Lube oil service tank 16m3/4227gal		–		–
107	1		SCR reagent tank 35m3/9246gal (optional)		–		–
145	1	DDB	Sludge tank 35m3/9246gal (optional)		–		–

FOR TENDERING ONLY

WÄRTSILÄ

© Wärtsilä Finland Oy
Power Plants

MASTER LAYOUT, SITE
POWER PLANT
18V50DF GAS POWER PLANT
3x18V50DF

Product 18V50DF | ACA | UNITS mm [in]

Proj. no.

MADE	15.9.2003	MMy/Myllymäki	ASLY.DRG –			
CHKD	15.9.2003	KVA/Vito-aho	SCALE 1:400	SIZE A1	Page No. 1/1	DRG. No. WDAAA294491 a Rev.
APPD	29.9.2003	MJJ/Juopperi				

This drawing is the property of Wärtsilä and shall neither be copied, shown nor communicated to a third party without the consent of the owner.