BLM

Environmental Assessment

for

Noble Cora Peak Allotment Improvement Project

Prepared by

Cara Farr, Rangeland Management Specialist

Bureau of Land Management

Pinedale Field Office

Pinedale, Wyoming

WY-100-EA09-025

NATIONAL SYSTEM OF PUBLIC LANDS

The BLM's multiple-use mission is to sustain the health and productivity of the public lands for the use and enjoyment of present and future generations. The Bureau accomplishes this by managing such activities as outdoor recreation, livestock grazing, mineral development, and energy production, and by conserving natural, historical, cultural, and other resources on public lands.

BLM/WY/PL-10/033+1020

1.0 INTRODUCTION

Noble Cora Peak Allotment Improvement Project, WY-100-EA09-025, is a rangeland improvement project with wildlife benefits. The Noble Cora Peak Allotment (NCPA) is a single use allotment encompassing approximately 2340 total acres (1868 federal, 562 private) in Sublette County approximately 7 miles west of Pinedale, WY (Map 1). The legal location of the project is T34 R110 S 17 and 18. This Environmental Assessment (EA) was prepared by the Pinedale Field Office (PFO), Pinedale Wyoming.

Map 1. Location of the Noble Cora Peak Allotment

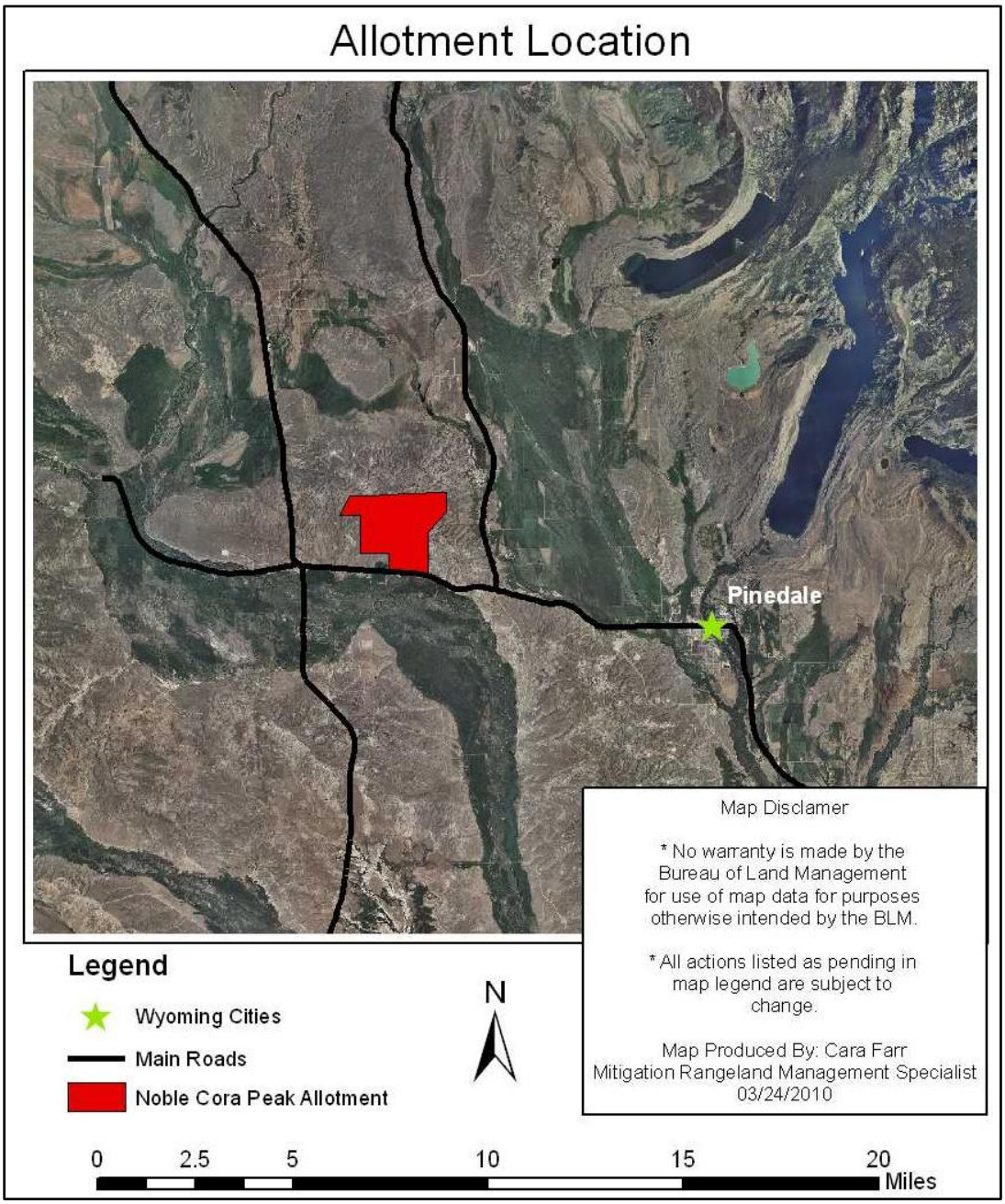

1.1 Background

The NCPA consists primarily of upland sagebrush habitat. There is one permittee utilizing the livestock grazing within the allotment on one grazing permit totaling 300 Animal Unit Months (AUMs) on public lands. There are currently no reliable water sources in the public lands of the allotment.

1.2 Purpose and Need for the Proposed Action

The purpose of this project is the maintenance of the NCPA for wildlife and range resources through improved water facilities and livestock distribution.

Existing conditions in the analysis area present opportunities for allotment improvements. The following needs for the proposed action were identified:

- There is a ***need*** to improve range water conditions while facilitating wildlife migration.

The goals and objectives are to:

1. Improve the distribution of water sources and provide drinking water for livestock and wildlife on the migration route.
2. Improve the distribution of grazing animals to enhance vegetation diversity.
3. Maintain or improve habitat quality for plant and animal populations and communities.
4. Provide adequate forage and water on a sustained-yield basis to satisfy the present management levels of livestock and big game animals.

Decision to be Made: There are two decisions to be made:

First determine whether impacts of the action alternatives are significant or not.

If the impacts are significant, a Notice of Intent (NOI) to prepare an Environmental Impact Statement (EIS) will be prepared. If the impacts are not significant, a Finding of No Significant Impact (FONSI) will be prepared. If a FONSI is prepared, the second decision is to determine whether to authorize Alternative 2. Proposed Action or Alternative 3. Sage-grouse Action through a Decision Record (DR).

1.3 Relationship to Statutes, Regulations, Plans or Other Environmental Analyses

Name of Plan/s: Pinedale Resource Management Plan (RMP)
Date Approved: November 26, 2008

Regulations at 1610.5-3 require actions to be in conformance with the approved land use plan. The Proposed Action is in conformance with the Pinedale RMP. RMP decision/s pertaining to this proposal include:

Pages 2-11 and 2-12 Cultural Resource Management

Goal

Protect and preserve significant cultural resources for appropriate use by present and future generations.

Reduce imminent threats to eligible and unevaluated cultural resources from natural or human-caused impacts or potential conflict with other resource uses.

Objectives

Protect National Register of Historic Places (NRHP)-eligible cultural sites and National Historic Trails.

Actions

Potential effects on cultural resources will be managed, to the extent possible, through avoidance and confidentiality of location. Where avoidance is not feasible or prudent, mitigation through data recovery, monitoring, or other data collection will be required. Before allowing for or permitting any surface disturbing activities, the appropriate level of cultural resource inventory will be performed to identify the presence of cultural resources. Should a significant (NRHP-eligible) cultural property be discovered, the area will be avoided if possible. Where avoidance is not possible, data recovery activities will be pursued as necessary.

Sites or locales considered sacred, sensitive, or of interest to modern Native Americans will be identified. If actions are proposed that would impact these properties or Native American use of them, consultation with affected tribal interests will occur. The input received from affected tribal groups will be considered before any irretrievable or irrevocable decisions are made.

Important cultural areas will be identified and inventoried to protect cultural resources before other management actions are proposed.

Pages 2-17 and 2-18 Livestock Grazing Management

Goal

Maintain and/or enhance livestock grazing opportunities and rangeland health.

Objectives

Maintain, restore, or enhance livestock grazing to meet the Wyoming Standards for Rangeland Health and achieve allotment objectives.

Actions

Grazing systems will be designed to maintain or improve watershed and range condition; for example, through changing seasons of use, implementing rotational or other grazing

management systems, or developing infrastructure for livestock management.

Livestock grazing in areas of crucial big game winter ranges will be managed to maintain or enhance vegetation condition and forage availability for wildlife, as appropriate.

In allotments with riparian habitat, grazing management actions will be designed to maintain or achieve proper functioning condition.

Pages 2-34 Soils Management

Goal

Prevent or mitigate impacts on soil stability, productivity, and water infiltration to prevent accelerated erosion and chemical degradation of the soil resource, and provide for optimal plant growth.

Pages 2-37 and 2-38 Vegetation Management

Goal

Maintain and/or enhance native vegetation community health, composition, and diversity in conformance with Wyoming Standards for Rangeland Health.

Objectives

Manage permitted actions to control the spread of and/or eradicate noxious weed infestations.

Ensure Special Status Plant Species habitats are maintained at a level sufficient for long-term species sustainability.

Conduct vegetation treatments to maintain important vegetation types and meet vegetation management goals.

Actions

Special Status Plant Species surveys are required on potential habitats before any project or activity is approved.

Page 2-45 to 2-52: Wildlife and Fish Habitat Management

Goals

Maintain or enhance aquatic and wildlife habitat.

Maintain functioning big game habitats and migration corridors that allow free movement and use of habitats.

Sustain the sagebrush biome on a landscape scale to provide the amount, continuity, and quality of habitat necessary to maintain viable populations of sage-grouse and other sagebrush obligate species.

Objectives
Maintain sufficient undisturbed or minimally disturbed habitats to maintain persistent, well-distributed, self-sustaining, and productive populations of all native and desirable non-native fish (e.g., brook, brown, and rainbow trout) and wildlife species within the planning area.

Maintain and enhance big game habitats to support big game populations at Wyoming Game and Fish Department (WGFD) planning objective levels.

Maintain raptor habitats and territories within the planning area to ensure long-term species sustainability and widely distributed functioning habitats in accordance with the Migratory Bird Treaty Act (MBTA).

Maintain sufficient undisturbed or minimally disturbed greater sage-grouse source habitats to maintain persistent, well-distributed, self-sustaining, productive populations of sage-grouse within the planning area.

Maintain sufficient, undisturbed, or minimally disturbed sensitive species habitats to ensure persistent, well-distributed, self-sustaining, and productive populations of sensitive species within the planning area.

Actions in Unavailable Areas
Water developments will be designed to protect animals from injury, and water will be made accessible for wildlife use with sufficient protective cover to the extent available.

No surface disturbing or disruptive activities are permitted in big game crucial winter ranges from November 15 to April 30.

BLM permitted activities are prohibited in big game parturition areas from May 1 to June 30.

Big game migration routes will be protected.

Permitted activities potentially affecting the habitat of Special Status Species will be considered on a case-by-case basis.

Surveys for Special Status Species will be conducted on BLM-administered public lands and mineral estate before any federal project or federal activity is approved.

Other Sensitive Species: If surveys conducted within areas not subject to timing limitations identify sensitive species' life-cycle activities, surface disturbing activities will be delayed until wildlife activity is completed.

Surface disturbing and disruptive activities will be avoided in suitable nesting and early brood-rearing habitat within 2 miles of occupied greater sage-grouse leks from March 15 to July 15.

Human activity will be avoided between 8:00 p.m. and 8:00 a.m. from March 1 to May 15 within one-quarter mile of the perimeter of occupied sage-grouse leks.

Surface disturbing activities are prohibited in suitable habitat within one-quarter mile of occupied leks.

All surface disturbing and disruptive activities are prohibited in greater sage-grouse winter concentration areas from November 15 through March 15.

Wyoming Executive Order (EO) 2008-2, and the Wyoming Stipulations for Development in Core Sage-grouse Population Areas, will be considered when permitting activities.

Prior to initiating surface disturbing activities within potential raptor habitat, surveys will be conducted for nesting, roosting, and foraging activity within a 1-mile radius of the proposed activity.

Surface occupancy (permanent structures) is prohibited within 2,600 feet of an active bald eagle nest.

Surface occupancy (permanent structures) is prohibited within 1,400 feet of an active ferruginous hawk nest.

The following seasonal restrictions for activities near active raptor nest, roosting sites, and foraging areas will be imposed:

- February 1 through July 31, within one-half mile of all active raptor nests
- April 1 through August 15, within one-half mile of burrowing owl nesting habitat
- February 1 through July 31, within 1 mile of all active ferruginous hawk nests
- February 1 through August 15, within 1 mile of bald eagle nests.

Page 2-54 to 2-56: Special Designations and Management Areas

Goal

Trapper's Point ACEC Management Goal. Preserve the viability of the big game migration bottleneck, cultural and historic resources, and important livestock trailing use.

Objectives

Ensure that no obstruction to the big game migration bottleneck within the Trapper's Point ACEC occurs, facilitate livestock trailing and gathering, and provide interpretation of cultural sites for the public.

Actions
Surface disturbing activities are prohibited except those to enhance the viability of the big game migration and operations of the Green River Drift, or activities to interpret or enhance understanding of the cultural site.

RMP ROD Appendix 18 Pages 18-16 to 18-26
Activities and habitat alterations that may disturb bald eagles will be restricted within suitable habitats that occur within bald eagle buffer zones:
Zone 1 (within one-half mile February 1 to August 15) is intended to protect active and alternative nests. For active nests, minimal human activity levels are allowed during the period of first occupancy to 2 weeks after fledging.
Zone 2 (within one-half to 1 mile from the nest) is intended to protect bald eagle primary use areas and permits light human activity levels.
Zone 3 is designated to protect foraging/concentration areas year-round. Zone 3 would include one of two larger areas, depending on habitat types: a) 2.5 miles extending in all directions from the nest or b) one-half mile from the bank of all streams within 2.5 miles of the nest. Site-specific habitat types and foraging areas will be evaluated to determine which Zone 3 buffer applies. Zone delineation depends on habitat types. Exceptions may be made after consultation with United States Fish and Wildlife Service (USFWS).

Minimal human activity levels— Essentially no human activity with the following exceptions:
Existing patterns of ranching and agricultural activities.
Nesting surveys and banding by biologists experienced with eagles.
River traffic by boats that continue travel at the rate of the main current and at a frequency which results in no boat traffic for at least 30 percent of the daylight hours (fishing from boats with such movement rates and frequency is acceptable).

Light human activity levels— This level allows for day use and low impact activities, such as boating, fishing, and hiking but at low densities and frequencies. Excluded activities include extended use and activities such as heavy construction, timber harvest, seismic exploration, blasting, concentrated use associated with recreation centers (e.g., picnic areas, boat landings), permanent housing, and helicopters or jets within one-half mile of the ground.

Moderate human activity levels— Low impact (light) activity levels are included, but intensity of such activities is not limited. A limited number of recreation centers designed to avoid eagle conflicts may be considered. Other activities, such as construction, seismic exploration, blasting, and timber harvest, should also be designed to specifically avoid disturbance. Designing projects or land uses to avoid eagle conflicts requires sufficient data to formulate a site-specific management plan.

Projects with the potential to disturb bald eagles should be implemented in the least amount of time and during periods least likely to affect the bald eagle.

BLM Instruction Memorandum (IM) No. WY-2010-012 for sage-grouse leks inside Core Areas.

For sage-grouse leks inside Core Areas:

- Surface disturbing activity or surface occupancy is prohibited or restricted on or within a 0.6 mile radius of the perimeter of occupied or undetermined sage-grouse leks.
- Disruptive activity is restricted on or within 0.6 mile radius of the perimeter of occupied or undetermined sage-grouse leks from 6pm to 8am from March 15 – May 15.

For sage-grouse nesting/early brood-rearing habitat inside Core Areas:

- Surface disturbing and/or disruptive activities are prohibited or restricted from March 15 – June 30. This restriction should be applied to suitable sage-grouse nesting and early brood-rearing habitat within Core Areas.

For sage-grouse leks inside Core Areas:

- Surface disturbing activity or surface occupancy is prohibited or restricted on or within a 0.6 mile radius of the perimeter of occupied or undetermined sage-grouse leks.
- Disruptive activity is restricted on or within 0.6 mile radius of the perimeter of occupied or undetermined sage-grouse leks from 6pm to 8am from March 15 – May 15.

For sage-grouse nesting/early brood-rearing habitat inside Core Areas:

- Surface disturbing and/or disruptive activities are prohibited or restricted from March 15 – June 30. This restriction should be applied to suitable sage-grouse nesting and early brood-rearing habitat within Core Areas.

For sage-grouse winter habitat/concentration areas:

- Surface disturbing and/or disruptive activities in mapped or modeled sage-grouse winter habitats/concentration areas that support Core Area populations, are prohibited or restricted from November 15 – March 14.

Other Authorities

This EA fulfills the National Environmental Policy Act (NEPA) of 1969 requirement for site-specific analysis. The Proposed Action is in accordance with 43 Code of Federal Regulations (CFR) 1610.5-3(a); Federal Land Policy and Management Act (FLPMA) of 1976, as amended; Taylor Grazing Act of 1934; Endangered Species Act (ESA) of 1983, as amended; The Clean Air Act as amended; Clean Water Act of 1977; National Historic Preservation Act (NHPA), as amended; MBTA of 1918, as amended; and the Wyoming Standards for Healthy Rangelands and Guidelines for Livestock Grazing, August 12, 1997.

1.4 Scoping, Public Involvement and Issues

The BLM decision-making process is conducted in accordance with the requirements of the Council on Environmental Quality (CEQ) regulations implementing NEPA, and the United States Department of Interior (USDI) and BLM policies and procedures implementing NEPA. NEPA

and the associated regulatory and policy framework require federal agencies to involve the interested public in their decision-making.

This project was proposed as a wildlife mitigation project to the Jonah Interagency Mitigation and Reclamation Office (JIO) in 2007 and approved for funding. Funding for the project will be provided by the JIO Mitigation Fund.

On September 18, 2008, a scoping package was mailed to 29 individuals and organizations. The scoping package described the proposed action. Eight (8) responses were received and analyzed (Appendix A). Three issues were identified through the scoping process: Greater sage-grouse habitat impacts and location of water wells near ephemeral drainages.

This EA has been developed in consultation and coordination with the allotment's grazing permittees, state and local agency personnel, other affected parties, and interested members of the public-at-large.

2.0 PROPOSED ACTION AND ALTERNATIVES

2.1 Alternative 1 – No Action Alternative

The No Action Alternative is not to take the action.
This alternative makes no change to the allotments.
The existing fence will remain as is and no new water will be added.

2.2 Alternative 2 – Proposed Action

The original proposal was modified to include wildlife-friendly fencing for the entire allotment in response to WGFD. The proposed action includes drilling two new wells and equipping them with stock tanks, redeveloping an existing spring development, and modifying the current allotment fence. (Map 2) Construction would occur from July 16th to November 14th.

1. Allotment Wells
    - 1a. Drill two new wells in the allotment at approx. Lat N42° 54' 32" Long W110° 2' 3" and Lat N42° 54' 16" Long W110° 0' 50"
    - 1b. Build watering facilities using rubber tire troughs (one 13 ft trough per well) set in concrete typical for cattle use.
        - a. Concrete pad supports ring and extends five feet from edge of ring around entire circumference.
        - b. Tire troughs will include wildlife escape ramps.
        - c. Well set-up will include 5,000 gal storage tank with automatic shut-off valve.
        - d. Set-up will include a mobile solar power trailer with the potential of thin film solar panels placed on-site and fenced.
2. Allotment fence modification
    - 2a. Current fences, within and on allotment boundary, will be modified according to WGFD Specifications.

2.3 Alternative 3 – Sage-grouse Action

The proposed action was modified to follow new Greater sage-grouse policy. The proposed action shows the two new wells within 0.6 miles of Greater sage-grouse leks. In this alternative the wells are moved outside of the 0.6 lek buffers. The sage-grouse action includes drilling two new wells and equipping them with stock tanks, redeveloping an existing spring development, and modifying the current allotment fence. (Map 3) Construction would occur from July 16th to November 14th.

1. Allotment Wells
    - 1a. Drill two new wells in the allotment at approx. Lat N42° 54' 44" Long W110° 2' 46" and Lat N42° 54' 24" Long W110° 0' 25"
    - 1b. Build watering facilities using rubber tire troughs (one 13 ft trough per well) set in concrete typical for cattle use.
        - a. Concrete pad supports ring and extends five feet from edge of ring around entire circumference.
        - b. Tire troughs will include wildlife escape ramps.
        - c. Well set-up will include 5,000 gal storage tank with automatic shut-off valve.
        - d. Set-up will include a mobile solar power trailer with the potential of thin film solar panels placed on-site and fenced.
2. Allotment fence modification
    - 2a. Current fences, within and on allotment boundary, will be modified according to WGFD Specifications.

Map2. Alternative II – Proposed Action

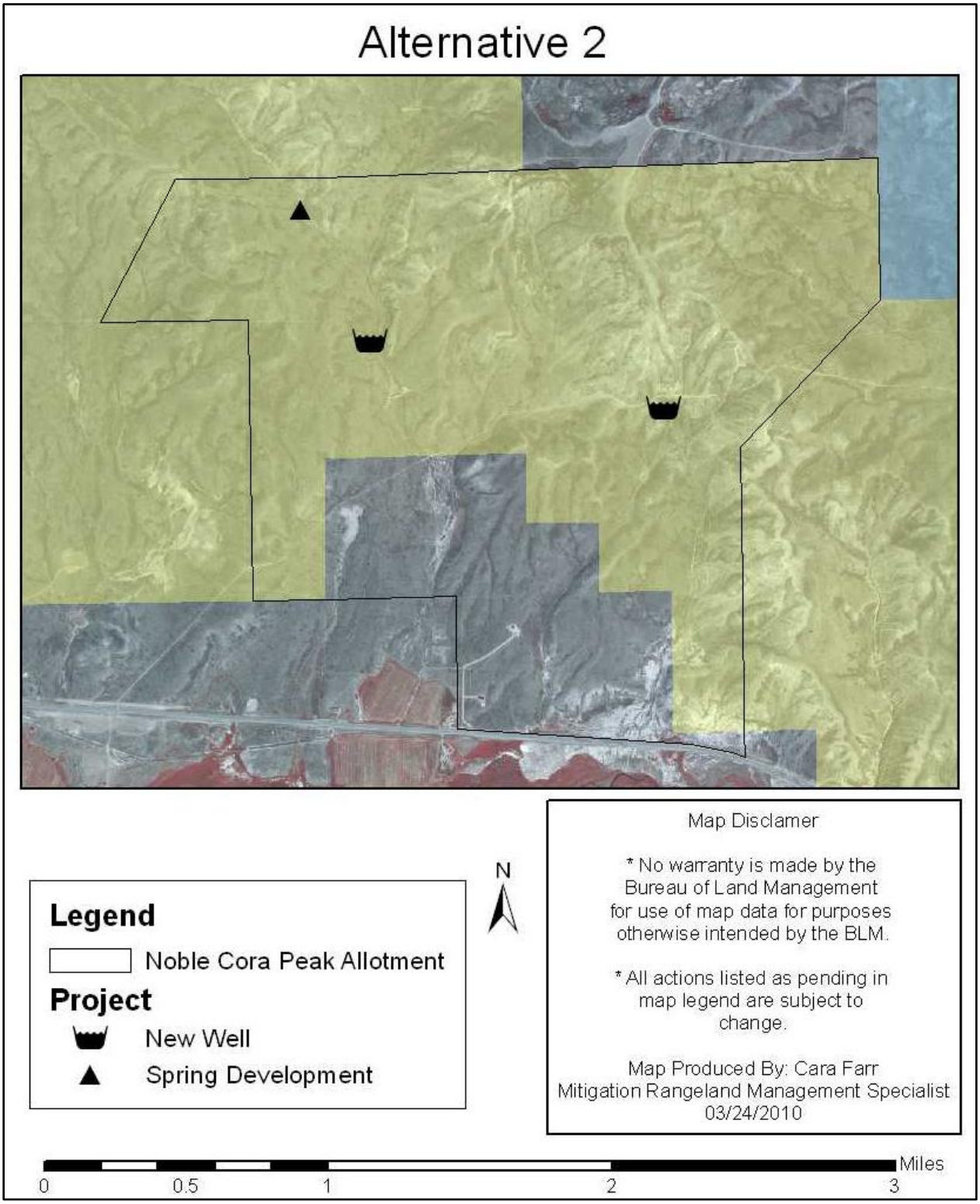

Map 3. Alternative III – Sage-grouse Alternative

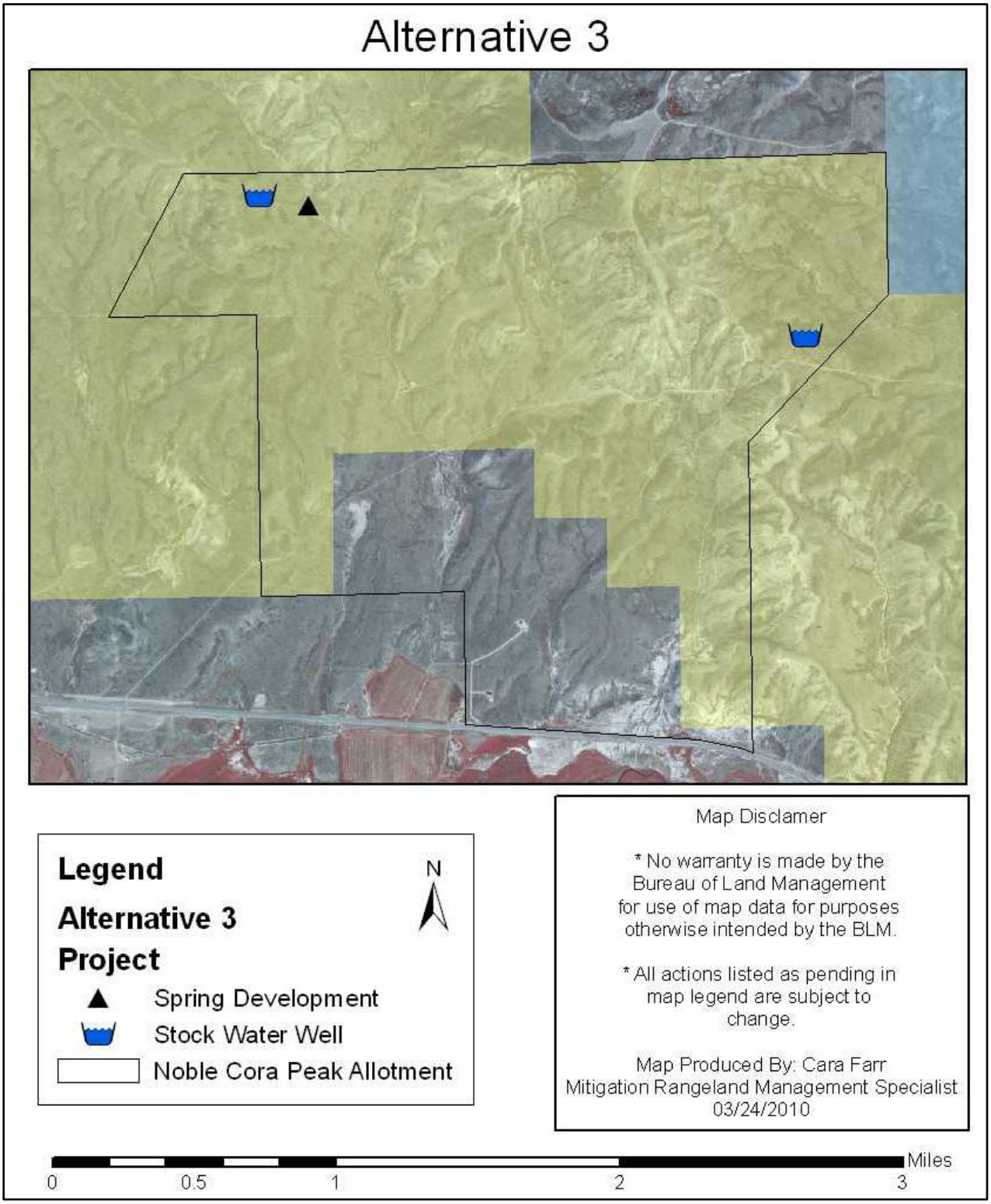

2.4 Design Features

Project design features are elements of the project design that are applied in Alternatives 2 and 3. These features were developed to reduce or avoid negative environmental effects of the proposed action on resources:

Wildlife Resources

Timing Stipulations for entire project

- No surface disturbing or disruptive activities are permitted in big game crucial winter ranges from November 15 to April 30.
- BLM permitted activities are prohibited in big game parturition areas from May 1 to June 30.
- Big game migration routes will be protected.
- Prior to initiating surface disturbing activities within potential raptor habitat, surveys will be conducted for nesting, roosting, and foraging activity within a 1-mile radius of the proposed activity.
- If a raptor nest is found within 1-mile of the project area, project implementation will be restricted by timing stipulations for raptor nests as directed in the RMP:
    - February 1 through July 31, within one-half mile of all active raptor nests.
    - April 1 through August 15, within one-half mile of burrowing owl nesting habitat.
    - February 1 through July 31, within 1 mile of all active ferruginous hawk nests.
    - February 1 through August 15, within 1 mile of bald eagle nests.
- Surface occupancy (permanent structures) is prohibited within 1,000 feet of an active raptor nest, within 1,400 feet of an active ferruginous hawk nest, or within 2,600 feet of an active bald eagle nest.
- Permitted activities potentially affecting the habitat of Special Status Species will be considered on a case-by-case basis.
- Surveys for Special Status Species will be conducted on BLM-administered public lands and mineral estate before any federal project or federal activity is approved.
- Other Sensitive Species: If surveys conducted within areas not subject to timing limitations identify sensitive species' life-cycle activities, surface disturbing activities will be delayed until wildlife activity is completed.
- Surface disturbing and disruptive activities will be avoided in suitable nesting and early brood-rearing habitat within 2 miles of occupied greater sage-grouse leks from March 15 to July 15.
- Human activity will be avoided between 8:00 p.m. and 8:00 a.m. from March 1 to May 15 within one-quarter mile of the perimeter of occupied sage-grouse leks.
- Surface disturbing activities are prohibited in suitable habitat within one-quarter mile of occupied leks.
- All surface disturbing and disruptive activities are prohibited in greater sage-grouse winter concentration areas from November 15 through March 15.
- Water developments will be designed to protect animals from injury, and water will be made accessible for wildlife use with sufficient protective cover to the extent available.

Wells/troughs/storage tanks/overflow

- Water storage tanks will either be buried or will not be taller than **4** feet to deter nesting and to lower the perching height of raptors and ravens.
- Stock water drinking tanks will be placed such that the top of the rim of the tank is no more than 20 inches from the ground surface for wildlife use.
- Stock water drinking tanks will be equipped with wildlife escape ramps. Ramps will be placed every 20 linear feet around the perimeter of the tanks.
- The end of the water overflow pipeline should be placed a good distance from the well site and on the side slope of the drainage. The end of the pipe should be perforated at the end allowing a greater area for wetland vegetation and forbs to establish. The location of the overflow pipe will be staked with a wildlife biologist prior to installation.
- Water wells should be turned on early in the spring and left on as long as possible into the fall for wildlife use.

Fence Design Features

- Fence will be built according to WGFD specifications for a four-wire stock fence:

WGFD Standard Four-Wire Stock Fence

A. Standards—See **Diagram A.**

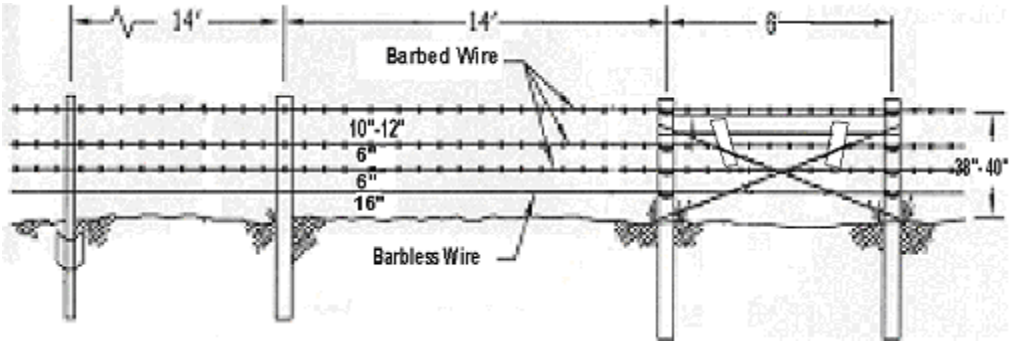

Diagram A. WGFD standard fence

1. Three steel "T"-posts to one wood post.
2. Line posts and steel "T"-posts are on 14-ft. spacing.
3. The top three wires are barbed wire and the bottom wire is barbless wire.
4. Maximum top wire height is 40 in. with a 12-in. spacing between the top wire and the second wire. The spacing from the ground to the bottom wire is 16 in. The spacing for the middle two wires is 6 in. (See **Diagram A.**)
5. Stretch panels shall be spaced no less than a quarter mile apart.

B. Variances

1. Post spacing may be decreased to no less than 10 ft. and increased to no greater than 16 ft. 6 in. The reduced spacing may be used on slopes, side hills, draws, or when the required post depth (30 in.) is unobtainable due to obstructions. The wider

spacing may be used only when compliance with other outside agency standards are required.

2. Post spacing of greater than 14 ft. shall have one or two equally spaced wood stays between line posts.
3. Wire spacing may be adjusted as needed; however, the spacing between the top wire and the second wire shall be no less than 12 in. The space between the ground and the bottom wire shall be no less than 16 in. All other wire spacing shall be no less than 6 in. and no greater than 10 in.
4. The steel "T" post to wood post ratio may be varied from all wood to all steel, as terrain and livestock pressure requires. General recommendations are that all steel "T" posts only be used on level ground, gravely soils, where minimal snow load occurs, and on boundary fence where there is little or no livestock pressure. All steel "T" post fences may also be installed where it is cost prohibitive to install wood posts. Circumstances dictating an all-wood post fence include severe terrain, moderate snow loads, and heavy livestock pressure.
5. If all wood construction is used, a steel "T" post shall be installed every half-mile. Secure the wires to the post so the post may act as a lightening rod.
6. One or two wood stays may be added per stretch to strengthen fence against snow load or livestock pressure.
7. Fifty-ft. wire gates may be added to corners or known travel routes in big game winter ranges, in lieu of drop fences, to provide escape routes for wildlife. Gates shall meet WGFD specifications and have four wood stays placed on 10-ft. spacing.
8. Poly-tape may be wrapped around the top wire to increase visibility for wildlife on big game winter ranges.

<u>Monitoring</u>

- Overflow areas will be monitored for vegetation establishment and wildlife and livestock use. If trampling and destruction of vegetation is occurring a fence may be constructed around the perimeter of the wet area.
- Spring development will be monitored for vegetation establishment and wildlife use. The fence around the spring development will be monitored for wildlife access and movement. If there is evidence of wildlife mortality due to the fence then the fence will be modified accordingly. Markers may be placed on the top wire of the fence for increased visibility to sage-grouse and other wildlife if deemed necessary.

Heritage and Cultural Resources

- A Class III inventory of the proposed new surface disturbance was completed to assess the project's potential to impact cultural resources.
- The proposed artesian spring redevelopment must stay within the existing area of disturbance.
- Only rubber-tired vehicles will be allowed to travel along the existing two-tracks, resulting in no additional impacts.

Watershed Resources

- Well water quality must meet State Standards for livestock use and surface release.

3.0 AFFECTED ENVIRONMENT

3.1 Introduction

The NCPA consists primarily of upland sagebrush habitat with bunch grasses and forbs in the understory. There is one permittee utilizing the livestock grazing within the allotment on one grazing permit totaling 300 animal unit months (AUMs). There are currently no reliable water sources in the public lands of the allotment. Wildlife uses in the allotment include sage-grouse leks, nesting and brood rearing habitat, pygmy rabbit habitat, foraging and nesting habitat for migratory birds including raptors, and migration routes for pronghorn and mule deer.

The Noble Cora Peak Allotment lies within the Trapper's Point ACEC. An ACEC is a designation that highlights areas where special management attention is needed to protect and prevent irreparable damage to important historic, cultural and scenic values; fish, wildlife resources or other natural systems or processes; or to protect human life and safety from natural hazards. Trapper's Point is a major funnel, or bottleneck, for mule deer and pronghorn in their migrations to and from winter range. The bottleneck is formed by the Green River to the west and the New Fork River agricultural lands to the east. A recent upswing in residential development to the east compounds the definition and constriction of the bottleneck. The Upper Green River Cattle Association relies on this area for movement of cattle from desert to forest allotments and back. This tradition has occurred for almost 100 years. Going back further in time, one of the most significant archaeological sites within the planning area is in the heart of the bottleneck, attesting to its long tradition with pronghorn. The Trapper's Point Site is a pronghorn kill and butchering site more than 6,000 years old. This project does not affect the substantial significance and values that qualified the Trapper's Point Area to meet the importance criteria of an ACEC.

The following are not present or will not be impacted and will not be further analyzed:

Air Quality
Environmental Justice
Prime or Unique Farmlands
Flood Plains
Hazardous or Solid Wastes
Paleontology
Recreation
Visual Resource Management
Water Quality and Prime or Sole Source of Drinking Water
Wild and Scenic Rivers
Wilderness Values

3.2 Wildlife

The NCPA consists primarily of upland sagebrush habitat with bunch grasses and forbs in the understory. A spring is located in the northwest corner of the allotment providing a small wet area and perennial wetland vegetation. Elevation ranges approximately from 7100 feet up to 7800 feet.

The majority of the fences surrounding the allotment have been in place for several years and do not meet WGFD wildlife friendly fence specifications. Existing fences include woven wire sheep fence and barbed wire fencing that is spaced incorrectly and in many places do not allow for safe wildlife passage.

The Project site is located within the PFO in an area that is “unavailable” for oil and gas leasing and development. This analysis tiers to the RMP Final Environmental Impact Statement (FEIS 2008).

Big Game

The allotment is located approximately 1.5 miles to the northwest of the Trapper’s Point migration bottleneck, which annually provides a narrow migration corridor for thousands of mule deer and pronghorn antelope. The allotment provides migration corridors, winter range, parturition range and transitional ranges for big game species including pronghorn antelope, mule deer and elk. No seasonal habitats are identified by the WGFD for moose within the allotment.

Pronghorn

Several pronghorn migrate from distant summer ranges in Grand Teton National Park (GTNP) and Bridger-Teton National Forest (BTNF) to winter ranges south of the project area. Pronghorn may begin migrating to winter ranges as early as October in some years, or as late as December in others, taking approximately 1 month to complete the trip. Pronghorn returning to GTNP may begin moving in April or earlier, depending on snow conditions (FEIS 2008).

Pronghorn from the Sublette Herd Unit primarily use the project area during the spring, summer and fall but will occasionally spend a portion of the winter in the area during mild winters. During spring and fall migrations, the area provides an important staging and foraging area for pronghorn going to and from wintering habitat located to the south (WGFD letter).

Mule deer

The Mesa, located to the south of the project area, provides crucial winter range for approximately 3,000 – 5,000 migratory mule deer that populate portions of 4 different mountain ranges in northwest Wyoming. Mule deer from the Sublette Herd Unit summer in the mountainous terrains surrounding the Mesa and migrate to winter ranges on the Mesa and along the Wind River front, traveling up to 60 to 100 miles (Sawyer, 2007).

The proposed project area provides crucial winter range for mule deer in the Sublette Herd Unit that winter in the area and transitional ranges during the spring and fall for mule deer migrating

to and from other wintering habitats located to the south (WGFD letter). Depending on snow conditions, mule deer arrive on winter ranges in late October during more severe winters and later in the year during mild winters. If winter conditions are mild, deer may move to the vicinity of Cora Butte. Migration back to summer ranges typically begins in late March or early April, depending on weather conditions (FEIS 2008). The project area also provides parturition range for mule deer in the spring.

Elk
The project area is designated as winter range for elk although elk are not commonly observed in the area.

Raptors
There are no known raptor nests located within 1-mile of the project area. Documented raptor nests are located along the riparian areas of the Green and New Fork River corridors. Common raptors that may hunt in the project area include red-tailed hawk, ferruginous hawk, golden eagle, Swainson's hawk, Cooper's hawk, sharp-shinned hawk, American kestrel and great-horned owl.

Fisheries
There are no fish or fisheries habitats within the project area.

FEDERALLY THREATENED, ENDANGERED SPECIES AND CANDIDATE SPECIES
Federally threatened, endangered and candidate species that may occur within the project area are listed in **Table 1.**

Gray Wolf
The gray wolf is a habitat generalist and may occur in many different types of habitats. In western Wyoming, wolves are dependent on movements of big game populations and may occur in large ungulate migration, wintering, or parturition areas. Gray wolves are not commonly observed within the project area but may hunt in the area particularly in the fall, winter and spring during big game migrations.

Greater sage-grouse
Greater sage-grouse are dependent on sagebrush habitats year-round. The general distribution of greater sage-grouse is associated with the distribution of sagebrush (*Artemisia* spp.), and in particular, big sagebrush (*A. tridentata*). Greater sage-grouse require open areas within the sagebrush community for leks where they perform courtship rituals. These strutting grounds (lek sites) are considered "traditional" or "historic" because the birds return to them annually. Adult male greater sage-grouse arrive first on leks, usually by mid-March, thereafter joined by sub-adult males and females. Females move to nest site vicinities several days after copulation. Although reports indicate that most females nest within 2 miles of leks where they breed, some greater sage-grouse hens in the Pinedale Anticline Project Area (PAPA) have nested farther than that. Greater sage-grouse hens tend to nest in the same vicinity in consecutive years.

After nesting, the hens move to brood areas that support forb understory or succulent vegetation (i.e., riparian areas or irrigated fields) and large populations of insects in late spring and late summer. The sage-grouse diet consists almost entirely of sagebrush during late fall and winter (FEIS 2008).

Table 1. Threatened, Endangered and Candidate Species that may occur within the project area.

SPECIES	STATUS	HABITAT	OCCURRENCE IN PROJECT AREA
Black-footed ferret (*Mustela nigripes*)	Endangered	Prairie dog towns	Does not occur
Canada lynx (*Lynx canadensis)*	Threatened	Montane forests	Does not occur
Gray wolf *(Canis lupus)*	Nonessential/experimental populations	Greater Yellowstone Ecosystem	May occur
Greater sage-grouse *(Centrocercus urophasianus)*	Candidate	Basin prairie shrub, mountain foothill shrub	Present
Grizzly bear (*Ursus arctos horribilis*)	Threatened	Montane forests	Does not occur
Yellow-billed cuckoo *(Coccyzus americanus)*	Candidate	Riparian areas west of Continental Divide	Does not occur
Colorado River Fish Species	Endangered	Yampa, Green and Colorado River systems downstream of Wyoming	Occurs downstream

Greater sage-grouse breeding, nesting, brood-rearing and foraging habitats are present within the project area. According to the WGFD 2009 greater sage-grouse database, there are 5 occupied leks and one unoccupied lek located within 4-miles of the project area. According to BLM records, several historic nest locations have been documented within 4-miles of the project area.

The nearest winter habitat area for sage-grouse is located approximately 2.5 miles southeast of the project area. Greater sage-grouse movements to winter ranges can take some time and may occur between late August and December. Wintering greater sage-grouse depend, in part, on sagebrush extending above the snow (FEIS 2008).

According to BLM IM No. WY-2010-012 it is the policy of the Wyoming BLM to manage sage-grouse seasonal habitats and maintain habitat connectivity to support population objectives set by the WGFD. This guidance is consistent with the guidelines provided in the Governor's Sage-grouse Implementation Team's Core Population Area strategy and the Governor's EO (State of Wyoming Executive Department EO 2008-2) that delineates core population areas and stipulations. The entire project area is located within the Governor's Designated Sage-grouse Core Area in the "Daniel" Core Area.

Colorado River Fish Species
The four federally endangered Colorado Fish species include the bonytail *(Gila elegans),* Colorado pikeminnow *(Ptychocheilus lucius),* humpback chub *(Gila cypha),* and razorback sucker *(Xyrauchen texanus).* Federal agency actions resulting in water depletions to the Colorado River system may affect these endangered species and their designated critical habitats and requires formal consultation with the USFWS.

Wyoming BLM Sensitive Species
Wyoming BLM sensitive species that may occur within the project area are listed in Table 2.

Idaho pocket gopher
Idaho pocket gopher habitat includes subalpine mountain meadows, shrub steppes and various grasslands, and rocky, shallow soils**.** Pocket gophers stay underground most of the time and forage above ground only at night or on overcast days (WYNDD). Idaho pocket gophers have been documented near Big Piney and in the extreme eastern region of the Pinedale BLM planning area (FEIS 2008). It is unknown whether Idaho pocket gophers inhabit the project area.

Pygmy rabbit
Dense sagebrush and relatively deep, loose soils are important characteristics of pygmy rabbit habitat in general. Overall shrub canopy in pygmy rabbit habitat typically ranges from 21-36%. The diet of the pygmy rabbit primarily consists of sagebrush, but also includes grasses and forbs in the spring and summer (WDFW 1995). Pygmy rabbit habitat is present within the project area.

Bald eagle
The bald eagle was listed as an endangered species in 1967 and subsequently reclassified as threatened in 1995. The USFWS removed (delisted) the bald eagle in the lower 48 states of the United States from the Federal List of Endangered and Threatened Wildlife by final rule dated July 9, 2007, effective August 8, 2007.

Bald eagle nesting, foraging and winter habitats are located within 1-mile of the project area along the Green River corridor to the south. Two documented bald eagle nests are located within 1-mile of the project area. This nesting territory was active from 2004 through 2007 but was not active in 2008 or 2009. Surveys conducted in spring 2010 found an adult incubating on a new nest near the previous nest locations (Patla pers. comm.). There are no records of winter

roosting bald eagles within 1-mile of the project area. The nearest documented winter roost is located approximately 5.5 miles to the south along the Green River (PAPO 2010 monitoring data).

Ferruginous hawk
Ferruginous hawks construct their big, bulky nests on the ground or occasionally in lone trees or on rock ledges. They nest only in areas with abundant prey, typically small rodents. During winter, ferruginous hawks are often found around colonies of prairie dogs, which make up much of their winter diet (FEIS 2008). There are no known ferruginous hawk nests within 1-mile of the project area.

Loggerhead shrike
The loggerhead shrike generally prefers open country with shrubs and low trees for nesting and spiny shrubs for impaling prey items. This species has been documented north of Fontenelle Reservoir within the PFO (FEIS 2008). The project area may contain suitable habitat for loggerhead shrikes.

Long-billed curlew
Long-billed curlews usually nest in prairie and grassy meadows near water but occasionally choose dry upland sites. This species nests in scattered areas throughout the northern half of the PFO and near Fontenelle Reservoir (FEIS 2008). The project area may contain suitable habitat for long-billed curlew.

Sagebrush Obligate Songbirds
As with all federal agencies, BLM has mandates to protect migratory birds under the MBTA (16 U.S.C. 703-711), the Bald and Golden Eagle Protection Act ((16 U.S.C. 668-668d), EO 13186 (January 10, 2001), and BLM IM 2008-050 (BLM, 2008). Under IM 2008-050, BLM has committed to minimize unintentional take of migratory birds and optimize their conservation until a national Memorandum of Understanding with USFWS is established as required under EO 13186. The Brewer's sparrow, sage sparrow and sage thrasher are sagebrush obligate songbirds that depend on sagebrush habitats for nesting and foraging (FEIS 2008). The upland sagebrush steppe habitat in the project area provides suitable habitat for sagebrush obligate songbirds.

Table 2. BLM Wyoming Sensitive Species that May Occur within the Project Area

SENSITIVE SPECIES COMMON NAME	SCIENTIFIC NAME	HABITAT	OCCURRENCE IN PROJECT AREA
Mammals			
Idaho pocket gopher	*Thomomys idahoensis*	Shallow stony soils	May occur
Long-eared myotis	*Myotis evotis*	Conifer and deciduous forests, caves and mines	Does not occur
Pygmy rabbit	*Brachylagus idahoensis*	Basin prairie and riparian shrub	May occur
White-tailed prairie dog	*Cynomys leucurus*	Basin prairie shrub, grasslands	Does not occur
Birds			
Bald eagle	*Haliaeetus leucocephalus*	Areas with open water and near concentrations of winter ungulates, waterfowl, and/or fish	Present
Brewer's sparrow	*Spizella breweri*	Basin prairie shrub	May occur
Burrowing owl	*Athene cunicularia*	Grasslands, basin prairie shrub	Does not occur
Ferruginous hawk	*Buteo regalis*	Basin prairie shrub, grassland, rock outcrops	May occur
Loggerhead shrike	*Lanius ludovicianus*	Basin prairie shrub, mountain foothill shrub	May occur
Long-billed curlew	*Numenius americanus*	Grasslands, plains, foothills, wet meadows	May occur
Mountain plover	*Charadrius montanus*	Grasslands, basin prairie shrub	Does not occur
Northern goshawk	*Accipter gentilis*	Conifer and deciduous forest	Does not occur
Peregrine falcon	*Falco peregrines*	Tall cliffs	Does not occur
Sage sparrow	*Amphispiza belli*	Basin prairie shrub, mountain foothill shrub	May occur
Sage thrasher	*Oreoscoptes montanus*	Basin prairie shrub, mountain foothill shrub	May occur

Trumpeter swan	*Cygnus buccinator*	Open woodlands, streamside willow and alder groves	Does not occur
White-faced ibis	*Plegadis chihi*	Marshes, wet meadows	Does not occur
Fish			
Bluehead sucker	*Catostomus discobolus*	Bear, Snake and Green river drainages, all waters	Does not occur
Flannelmouth sucker	*Catostomus latipinnis*	Colorado River drainage, large rivers, streams and lakes	Does not occur
Roundtail chub	*Gila robusta*	Colorado River drainage, large rivers, streams and lakes	Does not occur
Northern leatherside chub	*Lepidomeda copei*	Bear, Snake and Green River drainages, clear, cool streams and pools	Does not occur
Hornyhead Chub	*Nocomis biguttatus*	Lower Laramie and North Laramie River Watersheds	Does not occur
Colorado River cutthroat trout	*Oncorhynchus clarki pleuriticus*	Colorado River drainage, clear mountain streams	Does not occur
Fine-spotted Snake River cutthroat trout	*Oncorhynchus clarki spp.*	Snake River Drainage, clear, fast water	Does not occur
Yellowstone cutthroat trout	*Oncorhynchus clarki bouvieri*	Yellowstone Drainage, small mountain streams and large rivers	Does not occur
Amphibians			
Boreal toad (Northern Rocky Mountain population)	*Bufo boreas boreas*	Pond margins, wet meadows, riparian areas	Does not occur
Northern leopard frog	*Rana pipiens*	Beaver ponds, permanent water in plains and foothills	Does not occur
Columbia Spotted frog	*Ranus luteiventris*	Ponds, sloughs, small streams	Does not occur

3.3 Rangeland Resources

Livestock Grazing

The project area lies within the Noble Cora Peak Common Grazing Allotment (#02160) located near Cora in Sublette County, Wyoming, just North of Highway 191 near Trapper's Point. There are approximately 1,868 acres of public land and 562 acres of private land within the Allotment. The Allotment was run in common with two permittees until a full transfer to one of those permittees in 2003. Currently, the Allotment is permitted for cattle use by one permittee for 300 public AUMs from May 16th through June 19th. The last BLM utilization record in the allotment was for 2003 during which the allotment was in Non-use. The record shows 20-24% utilization. For the seven year period from 2004 to 2010, use was minimal with an average of 20 percent of permitted use (2004: 158 AUMS, 53%; 2005: 153 AUMs, 51%; 2006: 99 AUMs, 33%; 2007: Non-Use; 2008: Non-Use; 2009: Non-use; and 2010; Non-use). Non-use was chosen in 2007 through 2010 due to the lack of water in the allotment. In prior years, the permittee used a marginal, low producing well on private lands or trucked water into the private lands of the allotment. This watering location was on the low flats of the allotment nearest to Highway 191. The cattle did not often venture into the hills above the water onto public lands. High-use was seen on this site by the permittee and grazing was deferred in the allotment until more reliable water could be obtained (personal communication with the permittee).

Per the 2008 PFO RMP, the Allotment was noted as being in satisfactory condition and the livestock management was satisfactory, the area had potential for brush control, and no problems were identified. Therefore, the Allotment was assigned to the Maintain category. Permitted grazing use on the Allotment was analyzed in EA number WY-100-EA99-244 (FONSI/DR signed 7/27/1999) with no significant issues identified.

A rangeland health standards assessment was completed for the federal portion of the allotment in fall of 2009. The allotment meets all of the Standards for Rangeland Health and Guidelines for Grazing Management for BLM land in Wyoming.

Range improvement projects in the allotment include development of the Abner Luman Spring (RIPS# 348 and/or 1940) with associated fence, and two reservoirs. Even though there are three water developments on federal land in the allotment, these developments are failing and unreliable (Figure 1). The Abner Luman Spring was originally developed in 1940 and redeveloped for wildlife use only in 1996. The reservoirs are failing due to multiple reasons including being silted in. The two reservoirs did work in the past but it is noted in 1983 in the allotment file that the reservoirs needed maintenance due to siltation. They do not hold water even on high moisture years such as 2009 and 2010. Currently the only water available for livestock is located on private lands in the southern portion of the allotment.

Figure 1. Photograph of Failing Reservoir in the NCPA taken June 25, 2009

Vegetation

The Allotment lies within Major Land Resource Area (MLRA) 034A, Cool Central Desertic Basins and Plateaus with an annual precipitation range from 10 to 14 inches per year. There are two dominant ecological sites in the allotment, Loamy (Ly) 10-14" foothills and basins west and Gravelly (Gr) 10-14" foothills and basins west. Data was collected in three locations for Rangeland Health in Fall 2009, two sites in the Loamy 10-14" ecological site and one site in the Gravelly 10-14" ecological site (Map 1). Ecological sites were verified by digging soil pits at each site.

The loamy 10-14" ecological sites were found to be in two different plant communities: Site #1 in the Mixed Grass/Big Sage community (HCPC) and Site #4 in the Big Sage/Bunchgrass Community (Figures 2 and 5). Both of these sites are resultant from light grazing pressure and minimal disturbance. These sites are stable and well adapted to the climatic conditions of the site. (USDA NRCS, 2009b)

The gravelly 10-14" ecological site was determined to be in the Bluebunch Wheatgrass plant community, the Historic Climax Plant Community (HCPC) as defined by Natural Resources Conservation Service (NRCS) (Figure 3). This site is stable and well adapted to the climatic conditions of the site. (USDA NRCS, 2009a)

An important plant community within the Allotment includes mountain shrub communities although they make up a small proportion of the landscape (less than 50 acres or 2% of the allotment). The communities are highly productive and composed of species such as mountain mahogany and bitterbrush that are preferred mule deer food sources. Given the importance of these communities for wildlife habitat, photo points were taken (Figure 4).

Map 1. Rangeland Health Assessment Data Points

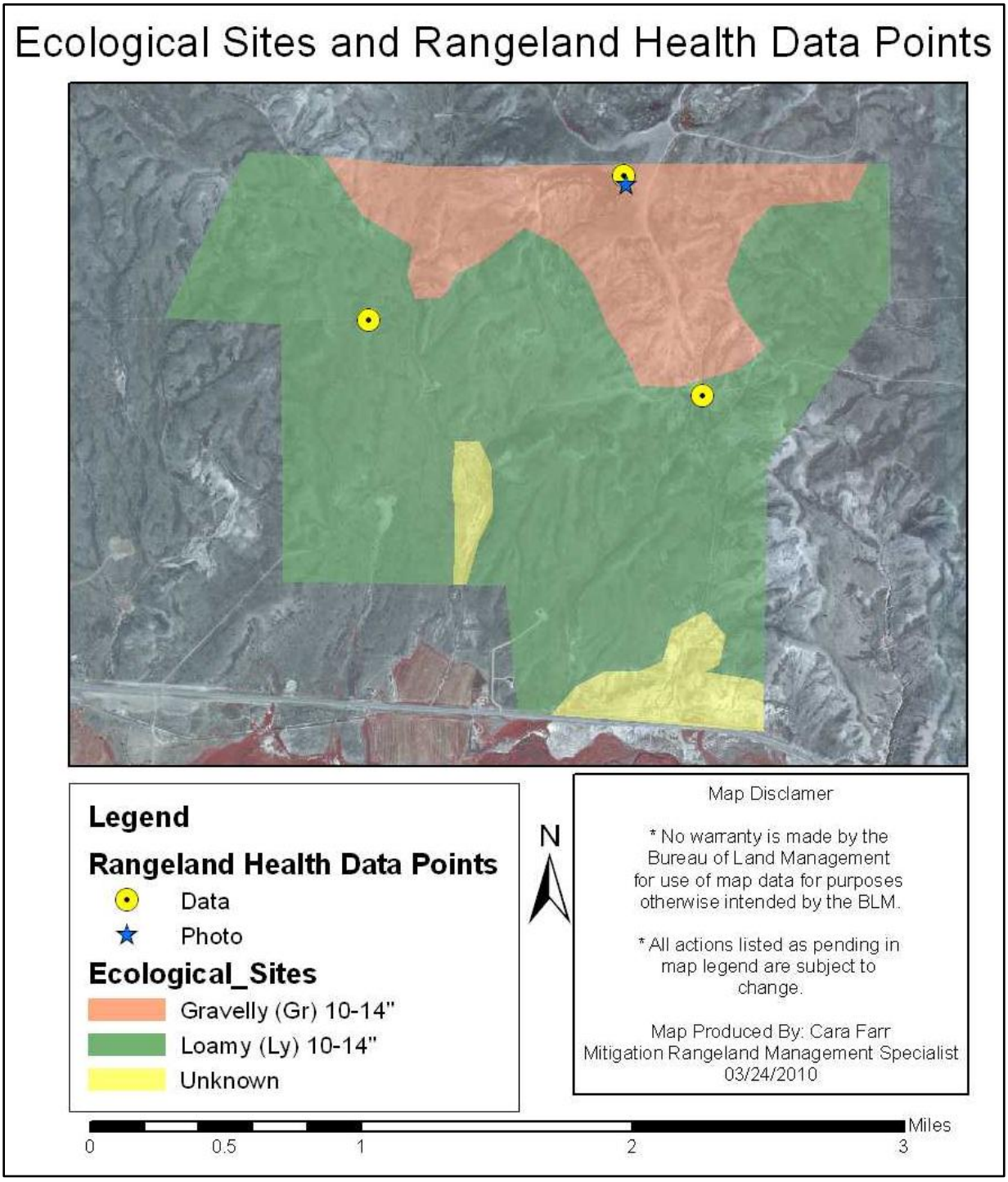

The plant communities found in the allotment show diversity among species and across state and transition models found in the Ecological Site Description (ESD) reports. This type of diversity has been shown to provide forage for cattle while providing habitat for wildlife (McAdoo et al., 2004).

Figures 2 and 3. Rangeland Health Sample Site #1 Loamy (Ly) 10-14″ and Site #2 Gravelly (Gr) 10-14”

Figures 4 and 5. Rangeland Health Sample Site #3 Mountain Shrub and Site #4 Loamy (Ly) 10-14”

Special Status Plants:

Threatened and Endangered Plants:

Ute Ladies’-tresses Orchid.

Ute ladies’-tresses orchid *(Spiranthes diluvialis)* was listed as threatened in 1992. In Wyoming, Ute ladies’-tresses orchid have been located on old oxbows or flood plain terraces associated with small streams on sites that remain moist (meadow plant communities) throughout the summer, either due to seasonal flooding or sub-irrigation (Fertig, 2000). All four of the known populations in Wyoming occur in the eastern half of the state. Searches were conducted in western Wyoming (Jackson Hole, National Elk Refuge, and Green River Basin) during the 1990s (Fertig, 2000). Given the elevation ranges and precipitation regimes associated with site occurrence, the species’ presence is unlikely. There are no known occurrences of the Ute ladies’-tresses orchid within the project area. There is no habitat in the project area fitting the

requirements of the plant. There are no anticipated effects to the Ute ladies'-tresses orchid from the proposed action and this species will not be discussed further.

Blowout Penstemon
Blowout penstemon (*Penstemon haydenii*) was declared an endangered species in 1987. In Wyoming, blowout penstemon is found on sandy blowouts and sand dunes in the early stages of plant development (Heidel et al., 2007). There are no known records of blowout penstemon in the or near the project area. There is no habitat in the project area fitting the requirements of the plant. There are no anticipated effects to the blowout penstemon from the proposed action and this species will not be discussed further.

BLM Sensitive Species

Table 3. BLM Sensitive Species in the PFO and their occurrence in the Noble Cora Peak Allotment.

Species Common Name	Scientific Name	Habitat	Occurrence in BLCA
Meadow Pussytoes	*Antennaria arcuata*	Moist, hummocky meadows, seeps or springs surrounded by sage/grasslands 4,950-7,900'	Does not occur
Trelease 's Milkvetch	*Astragalus racemosus* var. *treleasei*	Sparsely vegetated sagebrush communities on shale or limestone outcrops & barren clay slopes at 6500-8200'	Does not occur
Cedar Rim Thistle	*Cirsium aridum*	Barren, chalky hills, gravelly slopes, & fine textured, sandy-shaley draws 6,700-7,200'	Does not occur
Large-fruited Bladderpod	*Lesquerella macrocarpa*	Gypsum-clay hills & benches, clay flats, & barren hills 7,200-7,700'	Does not occur
Beaver Rim Phlox	*Phlox pungens*	Sparsely vegetated slopes on sandstone, siltstone, or limestone substrates 6,000-7,400'	May Occur
Tufted Twinpod	*Physaria condensata*	Sparsely vegetated shale slopes & ridges 6,500-7,000'	Does not occur
Whitebark Pine	*Pinus albicaulis*	Montane forests and on thin, rocky, cold soils at or near timberline at 4265-12140'	Does not occur
Limber Pine	*Pinus flexilis*	Timberline and at lower elevation with sagebrush. Associated species are Rocky Mountain lodgepole pine, Engelmann spruce, whitebark pine, Rocky Mountain Douglas-fir, subalpine fir, Rocky Mountain juniper, Mountain Mahogany, and common juniper	Does not occur

Wyoming BLM sensitive species that may occur within the project area are listed in Table 3. There are no known occurrences of the BLM sensitive plants within the project area. The site will be surveyed for sensitive plant species prior to implementation. There are no anticipated effects to these plants from the project and these species will not be discussed further.

Riparian/Wetland

There are two springs located within the project area; one on private land currently unimproved and the other is on BLM (Abner Luman Spring RIPS# 348 and/or 1940). The Abner Luman Spring is located in T34N R111W Sec 13 NESE ¼ and was developed in 1940 and improved in 1996. The spring was redeveloped, the channel above the spring was stabilized, and a fence was erected around the spring area allowing for maintenance of wetland health, while still allowing for use by wildlife. The redevelopment has also failed since 1996.

Invasive, Non-Native Species

Canada thistle (Cirsium arvense) in the Abner Luman Spring area and Musk Thistle (Carduus nutans) in the reservoir directly downstream from the spring have been identified and treated. Other invasive, non-native species in the project area may include cheatgrass (Bromus spp.) and Russian thistle (Salsola iberica); however, other State of Wyoming listed Noxious weed species have not been recorded. Current management includes annual monitoring and treatment of identified infestations.

3.4 Cultural Resources

The proposed Noble Cora Peak project area is located within the recently designated Trapper's Point ACEC. This area is known to contain dense concentrations of significant cultural resources primarily associated with prehistoric use of the migration bottleneck corridor. Two Class III inventories were conducted and associated reports compiled to assess and evaluate the proposed undertaking's effect on cultural resources in the project's Area of Potential Effect (APE) (Schweitzer 2008, Schweitzer 2010). A total of 40 acres for the proposed Noble Cora Peak project was inventoried for cultural resources at a Class III level. BLM-PFO recorded no new sites within the inventoried area.

3.5 Watershed Resources

The project lies within the Tyler Draw watershed of the Upper Green River Watershed. There are several intermittent streams and small wetlands in the allotment. The topography of the allotment consists of gently to moderately rolling upland topography with two major draws that flow in a southerly direction through the allotment. Some limitations of the soils are susceptibility to erosion, depth to bedrock, high calcium content, and rock.

4.0 ENVIRONMENTAL EFFECTS

4.1 Direct and Indirect Effects

4.1.1 Wildlife

Alternative I – No Action Alternative

The No Action Alternative would allow wildlife to utilize the NCPA as they currently are without changes. The allotment boundary fences and fences surrounding the existing spring would not be brought up to the WGFD wildlife friendly specifications. Fencing that does not meet wildlife friendly specifications can limit access and movement of wildlife, in particular big game species. The potential water developments and improvement to the spring development that could benefit a variety of wildlife species would not occur.

Common Effects for Alternatives II and III – Proposed Action and Sage-grouse Action

Providing additional water sources would improve livestock distribution in the NCPA. Better livestock distribution would help maintain the overall health of the rangelands for both livestock and wildlife in general. Maintaining healthy rangelands will benefit wildlife by allowing for maintenance of plant vigor and diversity, plant community composition, age class distribution and overall production within the allotment. The water tanks and overflows would provide drinking water for wildlife from late spring to early fall. Excess water from the wells would be allowed to flow into the overflow areas and would provide the opportunity for wetland vegetation and forbs to inhabit the area providing foraging habitat for wildlife. Enhancement of the spring and improving the fencing surrounding the spring area would provide a small wetland area accessible only to wildlife and would provide drinking water and foraging habitat for wildlife in general.

There will be a small loss of sagebrush habitat associated with the proposed well locations and facilities. Livestock trampling of the area around the stock water tanks may also reduce sagebrush habitat resulting in the loss of some sagebrush habitat. Placing the access, wells and facilities in low density sage areas will reduce the impact associated with installation of the wells and livestock trampling. For wildlife in general, the installation of the wells and associated facilities may cause some localized disturbance to wildlife that are in the area during these activities.

Modification of the allotment boundary fences and the fence surrounding the spring to WGFD wildlife friendly fencing specifications would make the fences compatible with wildlife passage. Fences that are brought up to wildlife friendly specifications may mitigate the mortality risk associated with non-friendly fences (Harrington and Conover 2007).

Big Game

Providing additional water sources would benefit big game in the area from late spring through early fall. Mule deer and pronghorn migrating through the area during the spring and fall and those using the area throughout the summer would have access to the stock water tanks and overflow areas. The spring development would also provide drinking water and foraging habitat for big game species. Maintaining the overall health of the rangelands

will benefit big game by providing necessary forage and cover throughout the allotment. Big game that are in the area during installation of the proposed wells and associated facilities may be temporarily disturbed and displaced by the activity but should return to the area once installation is complete.

Raptors

The maintenance of healthy rangelands and plant communities will benefit raptor species by providing cover and forage for raptor prey species. Raptor species that are in the area during installation of the proposed wells and associated facilities may be temporarily disturbed and displaced by the activity but should return to the area once installation is complete. No active raptor nests are documented within 1-mile of the project area.

FEDERALLY THREATENED, ENDANGERED SPECIES AND CANDIDATE SPECIES

Gray Wolf

Gray wolves are dependent on movements of big game populations and may occur in large ungulate migration, wintering, or parturition areas. During project activities wolves may change their use of the project area based upon changes to big game population numbers and changes in movement of herds (USFWS letter). The proposed project would provide drinking water and forage for big game inhabiting or migrating through the area and would not change the population numbers or the movement of herds. The proposed project would have “no affect” on gray wolves.

Colorado River Fish Species

The proposed project would result in an average annual water depletion of 0.011 acre-feet from the Colorado River system. Because the projected amount of water consumption is below the threshold of 0.1 acre-feet, formal Section 7 consultation with the USFWS is not necessary. The proposed project would have “no affect” on the Colorado River fish species. A letter of concurrence from the USFWS has been received and is located in the project file.

Sensitive Species

Idaho pocket gopher

Installation of the proposed wells and associated facilities may temporarily disturb Idaho pocket gophers. It is likely that gophers would flee or retreat in burrows during installation of the facilities. The maintenance of healthy rangelands and plant communities will benefit Idaho pocket gophers by providing cover and forage. The small loss of sagebrush that is likely to occur around the wells and associated facilities may reduce the amount of suitable habitat available to Idaho pocket gophers.

Pygmy rabbits

Installation of the proposed wells and associated facilities could cause some localized disturbance to pygmy rabbits in the area during the installation including dispersal and/or avoidance. The maintenance of healthy rangelands and plant communities will benefit pygmy rabbits by providing cover and forage. The small loss of sagebrush that is likely to occur around the wells and associated facilities will reduce the amount of suitable sagebrush habitat available to pygmy rabbits.

Bald eagle
The maintenance of healthy rangelands and plant communities will benefit bald eagles by providing cover and forage for eagle prey species. Installation of the proposed wells and associated facilities could cause some localized disturbance to bald eagles that are in the area during the installation including dispersal and/or avoidance. There is an active bald eagle nest located within 1-mile of the NCPA. The proposed well locations, associated infrastructure and the spring improvement are located over 1-mile from the nest. The access road to the allotment which is located along State Highway 191, is located within 1-mile of the nest location.

Ferruginous hawk
The maintenance of healthy rangelands and plant communities will benefit ferruginous hawks by providing cover and forage for raptor prey species. Hawks that are in the area during installation of the proposed wells and associated facilities may be temporarily disturbed and displaced by the activity but should return to the area once installation is complete. No active ferruginous hawk nests are documented within 1-mile of the project area.

Sensitive Bird Species - (loggerhead shrike, long-billed curlew, sagebrush obligate songbirds)
The loss of sagebrush habitat associated with the well locations and proposed facilities will reduce the amount of sagebrush cover and nesting habitat for a variety of bird species. Placing the access, wells and facilities in low density sage areas will reduce the impact associated with installation of the wells and livestock trampling of vegetation.

Water tanks that have no escape structures may result in drowning of small birds and mammals. Escape ramps will be installed in all tanks around the perimeter providing an escape route for any animal in peril within the tank.

Alternative II – Proposed Action
Greater sage-grouse
The entire project area is located within the Governor's Designated Sage-grouse Core Areas. As stated in the WY-2010-012 IM, "timing, distance, and density restrictions will be considered across all Field Offices in NEPA Analyses. Field offices may vary in their application of these restrictions when that variance is based on locally collected scientific data and information and is included in the NEPA analyses". Dates used for timing stipulations applied to this project were identified in the 2008 RMP. These dates were developed from locally based scientific studies and are slightly different than the suggested dates that are in the WY-2010-012 IM. The proposed wells in Alternative 2 are in compliance with the 2008 RMP and are not located within 0.25 miles of occupied leks. The wells however are located within 0.6 miles of occupied sage-grouse leks and are not in accordance with the conservation measures outlined in WY-2010-012 IM.

Providing additional water sources would improve livestock distribution in the NCPA and would help maintain the health of the rangelands. Healthy rangelands could benefit sage-grouse by providing vegetative diversity for nesting, foraging and cover. Excess water from

the wells would be allowed to flow into the overflow areas and would provide the opportunity for wetland vegetation and forbs to inhabit the area providing foraging and brood-rearing habitat for sage-grouse. Enhancement of the spring would provide a small wetland area accessible only to wildlife and would provide foraging and brood-rearing habitat for sage-grouse.

Access to the well locations, drilling the wells and installing proposed facilities may reduce sagebrush habitat. Livestock trampling of the area around the water tanks may also reduce sagebrush habitat resulting in the loss of some sage-grouse nesting habitat. Placing the access, wells and facilities in low density sage areas will reduce the impact associated with installation of the wells and livestock trampling. Sage-grouse that are in the area during installation of the proposed wells and associated facilities may be temporarily disturbed and displaced by the activity but should return to the area once installation is complete.

Water storage tanks may provide perching and nesting opportunities for raptors and common ravens which could increase predation on sage-grouse. Lower profile tanks will be used to deter raptor nesting and lower perching height thereby reducing the associated impact on sage-grouse and other raptor prey species.

Water tanks that have no escape structures may result in drowning of small birds and mammals, including sage-grouse. Escape ramps will be installed in all tanks around the perimeter providing an escape route for any animal in peril within the tank.

Alternatives III – Sage-grouse Action

Greater sage-grouse

In Alternative 3, the wells are located outside of the 0.6 mile lek buffer and are in accordance with both the 2008 RMP and the conservation measures contained in WY-2010-012 IM.

Providing additional water sources would improve livestock distribution in the NCPA and would help maintain the health of the rangelands. Healthy rangelands could benefit sage-grouse by providing vegetative diversity for nesting, foraging and cover. Excess water from the wells would be allowed to flow into the overflow areas and would provide the opportunity for wetland vegetation and forbs to inhabit the area providing foraging and brood-rearing habitat for sage-grouse. Enhancement of the spring would provide a small wetland area accessible only to wildlife and would provide foraging and brood-rearing habitat for sage-grouse.

Access to the well locations, drilling the wells and installing proposed facilities may reduce sagebrush habitat. Livestock trampling of the area around the water tanks may also reduce sagebrush habitat resulting in the loss of some sage-grouse nesting habitat. Placing the access, wells and facilities in low density sage areas will reduce the impact associated with installation of the wells and livestock trampling. Sage-grouse that are in the area during

installation of the proposed wells and associated facilities may be temporarily disturbed and displaced by the activity but should return to the area once installation is complete.

Water storage tanks may provide perching and nesting opportunities for raptors and common ravens which could increase predation on sage-grouse. Lower profile tanks will be used to deter raptor nesting and lower perching height thereby reducing the associated impact on sage-grouse and other raptor prey species.

Water tanks that have no escape structures may result in drowning of small birds and mammals, including sage-grouse. Escape ramps will be installed in all tanks around the perimeter providing an escape route for any animal in peril within the tank.

4.1.2 Rangeland Resources

Alternative I – No Action Alternative

Livestock Grazing

No Action would result in no new water sources in the project area, therefore, no change in animal distribution. Opportunities and benefits related to improved water access for both livestock and migrating wildlife would also not be realized. The permittee would continue to utilize the well on private lands and/or haul water to the watering site on private lands. Current pressure would remain on the existing water source on private lands. The permittee would also potentially continue Non-use.

Vegetation

Under these alternatives, vegetative species, including shrubs, forbs and grasses, would be utilized in the current animal distribution patterns. The plant communities identified for the ecological sites in the allotment are expected to remain in the same state, Sites #2 Bluebunch Wheatgrass and #4 Big Sage/Bunchgrass, or trend away from the HCPC, Site #1 from Mixed Grass/Big Sage to Big Sage/Bunchgrass. (USDA NRCS, 2009a and 2009b)

Riparian/Wetlands

No benefits of improved wetland habitat associated with the redevelopment of the Abner Luman Spring or run-off from the proposed new wells.

Invasive, Non-Native Species

The continuation of current weed management activities (early detection, rapid response, plus continuous monitoring) will ensure impacts are minimized.

Alternatives II and III – Proposed Action and Sage-grouse Action

Livestock Grazing

New functioning water sources would improve overall livestock distribution throughout the Allotment. Livestock concentration around water sources may compact the soil or reduce the vegetation resulting in localized increased water runoff. However, erosion has not been identified as a problem in the Allotment as perennial vegetation (shrubs and perennial

bunchgrasses) is abundant and act to stabilize the area. The location of the water sources for Alternative 3 will likely distribute livestock better than the locations for Alternative 2.

Vegetation

Under this alternative, vegetative species, including shrubs, forbs and grasses, would be more evenly used by improved animal distribution and would experience more overall livestock use than in the past 10 years. The plant communities identified for the ecological sites in the allotment are expected to remain in the same state for Sites #1 Mixed Grass/Big Sage and #2 Bluebunch Wheatgrass, or trend towards the HCPC for Site #4 from Big Sage/Bunchgrass to Mixed Grass/Big Sage (USDA NRCS, 2009a and 2009b). The plant communities found in the allotment show diversity among species and across state and transition models found in the Ecological Site Description (ESD) reports. This diversity would be maintained by the proposed actions. This type of diversity has been shown to provide forage for cattle while providing habitat for wildlife (McAdoo et al., 2004).

Riparian/Wetlands

The proposed improvement of the Abner Luman Spring would allow for improved wetland habitat and a highly productive source of wildlife forage and continuous water. It would also improve water movement into the downstream reservoir, thereby creating more habitat and water availability. Run-off associated with the two new wells would create new small wetland-type areas which would increase herbaceous vegetation production including that of forbs.

Invasive, Non-Native Species

During the initial short-term development of the infrastructure associated with this alternative, the incidence of invasive, non-native plant species may increase in those areas disturbed. However, the continuation of current weed management activities (early detection, rapid response, plus continuous monitoring) will ensure any potential impacts are minimized if not nullified.

4.1.3 Cultural Resources

Alternative I – No Action Alternative

Cultural resource sites would not be disturbed because the construction activities would not occur.

Common Effects for Alternative II – Proposed Action and Alternative III – Sage-grouse Action

Class III inventories were conducted and associated reports compiled to assess and evaluate the proposed undertaking's effect on cultural resources in the project's Area of Potential Effect (APE) (Schweitzer 2008, Schweitzer 2010). A total of 40 acres for the proposed Noble Cora Peak project was inventoried for cultural resources at a Class III level. BLM-PFO recorded no new sites within the inventoried area. The proposed project will not impact any known cultural resources. The proposed artesian spring redevelopment must stay within the existing area of disturbance. The proposed replacement of existing allotment barb-wire fencing with smooth-

wire will not result in any impacts to cultural resources. Only rubber-tired vehicles will be allowed to travel along the existing two-tracks, resulting in no additional impacts. This project, as currently proposed, will result in no effects to significant cultural resources.

4.1.4 Watershed Resources

Alternative I – No Action Alternative

Current management would continue. Livestock pressure would continue at natural water sources.

Alternative II and III– Proposed Action and Sage-grouse Action

Better livestock distribution will reduce pressure on current natural water sources and watershed health will improve. Erosion in the allotment will increase for a short period directly after new disturbance but will decrease over time with reclamation.

4.2 Cumulative Effects

The cumulative effects (CE) analysis area is the allotment boundary and the CE time frame is ten years prior to the project and ten years into the future.

Corridor Conservation Campaign of the Green River Valley Land Trust (GRVLT) is a cumulative action with this project. GRVLT Path of the Pronghorn Wildlife-Friendly Fence Initiative is an ongoing project with a goal of modifying non-wildlife friendly fencing within the pronghorn migration corridor from Trapper's Point north to the Bridger-Teton National Forest (BTNF) boundary. The modification of some of the Allotment Fences is within the corridor of the Wildlife-Friendly Fencing Initiative. For effects to pronghorn, the analysis area is the migration corridor from Trapper's Point to the USFS boundary.

Alternative I – No Action

A portion of the fences surrounding the Noble Cora Peak Allotment that are within the pronghorn WGFD designated migration corridor were modified to wildlife friendly fence specifications through the Corridor Conservation Campaign of the project in 2009. However, there are approximately 3 miles of remaining BLM fences surrounding the project area that do not meet the wildlife friendly fence specifications. These fences were not modified by the GRVLT because they were located outside of the Corridor Conservation Campaign designated project area (WGFD pronghorn migration route). The remaining fences do however fall within the WGFD mule deer migration route. In the No Action Alternative, these fences will be left in their current condition and will not be brought up to current WGFD fence specifications.

Alternative II and III – Proposed Action and Sage-grouse Action

A portion of the fences surrounding the Noble Cora Peak Allotment that are within the pronghorn WGFD designated migration corridor were modified to wildlife friendly fence specifications through the Corridor Conservation Campaign of the project in 2009. However, there are approximately 3 miles of remaining BLM fences surrounding the project area that do not meet the wildlife friendly fence specifications. Modifying the remaining 3-miles of the Noble Cora Peak allotment boundary fences to wildlife friendly fence specifications will replace non-

wildlife friendly fencing within these migration corridors and will benefit several thousands of migrating mule deer and pronghorn.

Improved distribution of animal use in conjunction with weed management activities decrease the potential for impacts associated with invasive, non-native species.

As rangeland health increases through better livestock distribution so should watershed health. Erosion should decrease in response to healthier rangeland in the future.

As there are no known cultural properties located within the current proposed project APE, there will be no cumulative effects from the placement of the wells at their proposed locations.

5.0 TRIBES, INDIVIDUALS, ORGANIZATIONS, or AGENCIES CONSULTED

The BLM consulted the following individuals, Federal, State, and local agencies, and non-BLM persons during the development of this environmental assessment:

FEDERAL, STATE, AND LOCAL AGENCIES:

Jonah Interagency Office, US EPA Region 8, Wyoming Department of Agriculture, Wyoming Landscape Conservation Initiative, Sublette County Conservation District, US Fish and Wildlife Service, Wyoming DEQ, Wyoming Game and Fish, State of Wyoming- Governor's Office, Sublette County Commissioners, Sublette County Extension Office, Natural Resources Conservation Service, USFS Bridger Teton National Forest Pinedale Ranger District, Sublette County Weed and Pest

OTHERS:

Western Watersheds Project, Rocky Mountain Elk Foundation, neighboring landowners, and affected and interested public.

6.0 LIST OF PREPARERS

Cara Farr, ID Team Leader / Rangeland Management Specialist
Theresa Gulbrandson, Wildlife Biologist
Robert Schweitzer, Cultural Resources Specialist

6.1 List of Reviewers

Kellie Roadifer, Planning and Environmental Coordinator

7.0 REFERENCES

BLM 2008 - FEIS. Resource Management Plan and Final Environmental Impact Statement for the Pinedale Field Office.

BLM 2008 - SEIS. Final Supplemental Environmental Impact Statement for the Pinedale Anticline Oil and Gas Exploration and Development Project.

Griscom, H., D. Kenaith and M. Anderson. 2010. Pocket Gopher Surveys in Southwestern Wyoming, Draft Project Report. Wyoming Natural Diversity Database. Laramie, WY.

Harrington, J. L., and M. R. Conover. 2007. Characteristics of ungulate behavior and mortality associated with wire fences. Wildlife Society Bulletin 34:1295–1305.

McAdoo, J.K., S. R. Swanson, B.W. Schultz, and P.F. Brussard (2004). *Vegetation Management for Sagebrush-Associated Wildlife Species*. USDA Forest Service Proceedings RMRS-P-31.

Noble Cora Peak Common Allotment Term Grazing Permit Renewal EA: WY-100-EA99-244 (FONSI/DR signed 7/27/1999).

Schweitzer, R. 2008. *A Class III Inventory for the Proposed Jonah Interagency Office Noble Cora Peak Project. Sublette County, WY*. Report on file with the Bureau of Land Management Pinedale Field Office.

Schweitzer, R. 2010. (publication pending) *Addendum to the Class III Cultural Resources Report on the Proposed Jonah Interagency Office Noble Cora Peak Project, Sublette County, Wyoming.* Report on file with the Bureau of Land Management Pinedale Field Office.

State of Wyoming Executive Department Executive Order # 2008-2 "Greater sage-grouse core area protection.

United States Department of Agriculture (USDA) NRCS (2009a, October). *Ecological Site Description: Gravelly (Gr) 10-14" Foothills and Basins West*. Retrieved December 29, 2009, from http://esis.sc.egov.usda.gov/esis_report/fsReport.aspx?id=R034AY212WY&rptLevel=all&approved=yes

USDA NRCS (2009b, October). *Ecological Site Description: Loamy (Ly) 10-14" Foothills and Basins West*. Retrieved December 29, 2009, from http://esis.sc.egov.usda.gov/esis_report/fsReport.aspx?id=R034AY222WY&rptLevel=all&approved=yes

USFWS comment letter dated October 23, 2008.

Washington Department of Fish and Wildlife (WDFW). 1995. Washington state recovery plan for the pygmy rabbit. Wildlife Management Program, Wash. Dep. Fish and Wildl., Olympia. 73pp.

Wyoming Game and Fish Department comment letter dated October 22, 2008.

Wyoming Natural Diversity Database. Species Assessment Reports for Various Species. Available online: http://uwadmnweb.uwyo.edu/wyndd/info.asp?p=3493

Appendices

Appendix A.

Public Comments Received During Public Scoping

Comment	Comment Response
This looks to be a great project to distribute wildlife and livestock.	Thank you for your comment.
When drilling the wells and redeveloping the spring please keep in mind that disturbance of the ground can create habitat for noxious weeks. Please monitor the area and reclaim as soon as possible.	Will include monitoring and noxious weed design features in the project.
Two wells are a waste of money. Cows will walk two miles for water.	The need for reliable water was discussed in the EA, Range . The location of water wells was determined by Greater sage-grouse lek buffers. The center of the allotment is all within lek buffers and for distribution purposes two locations on the eastern and western portions of the allotment were chosen.
Water projects are good for wildlife and cattle.	Thank you for your comment.
Need a better map in order to provide good comments.	A new better map was provided.
Please note that before these wells are drilled, a ground water permit must be obtained.	A permit will be obtained.
No record of the spring development is found. Please make sure proper procedure is followed.	Thank you for your comment.
The new well proposed in the NW 1/4 of Section 20 would most likely benefit wildlife distribution.	Thank you for your comment.
Additional water developments may have some benefits to sage-grouse throughout the summer.	Thank you for your comment.
There could be negative impacts to sage-grouse if water developments attract higher livestock use, which may in turn reduce residual cover in nesting habitats.	Addressed in EA- Wildlife Section
This project falls within the GRVLT WFFI. The Department supports the BLM and the livestock permittee in any efforts to modify or replace existing fences, as they do not currently meet desired wildlife-friendly specifications.	The GRVLT WFFI completed fence conversions on the boundary fences of the allotment.

Comment	Comment Response
We recommend that the Environmental Assessment include a detailed management plan that delineates proper utilization and stocking rates, appropriate timing and class of livestock, and a proper maintenance plan.	Will be addressed at the time of Term Permit Renewal.
This is not the worst possible system (year round, summer long) but is certainly the next worst system and certainly not one that has any realistic chance of recovery for vegetation and soils	Will be addressed at the time of Term Permit Renewal.
The allotment is currently permitted at 6 acres/AUM which is quite high for this area and its condition. . . . This area is significant transitional range for nearly all ungulates, so a 50% utilization level is not appropriate even if it were in excellent range condition, which it is not.	Will be addressed at the time of Term Permit Renewal.
The first option should be alter the season of use, so maybe 1 year out of 3, use is during the critical growing season and the other two years are late fall to early winter.	Will be addressed at the time of Term Permit Renewal.
While it may be true that wildlife may drink from developed water, that does not translate to benefits. . . . Around each water development you have significantly impacted a large portion of the sage-grouse habitat on the BLM portion of the allotment. This, of course, will also impact transitional range for ungulates as well.	Addressed in EA- Wildlife Section
From what I can tell the proposed well/tank is in or very close to the drainage itself, which would, of course, be the absolute worst place it could be. The east side well/tank is likewise in the drainage draining the east side of the allotment, also the worst possible location. This is additionally a bad idea because of the significant erosion and headcutting/ downcutting that is occurring on these drainages.	See Alternative III. In Aternative III, the wells and stock tanks were moved farther away from the drainages on both sides of the allotment.
The proposed project is an excellent example how livestock grazing can benefit both plant diversity and vigor, along with wildlife and wildlife habitats.	Thank you for your comment.
These types of projects are essential for enhancing and maintaining the health of range for all interested parties.	Thank you for your comment.

Comment	Comment Response
If the proposed project may affect a listed species, please contact the Service to discuss consultation requirements.	Consultation has been completed.