Appendix A

Typical Construction Figures

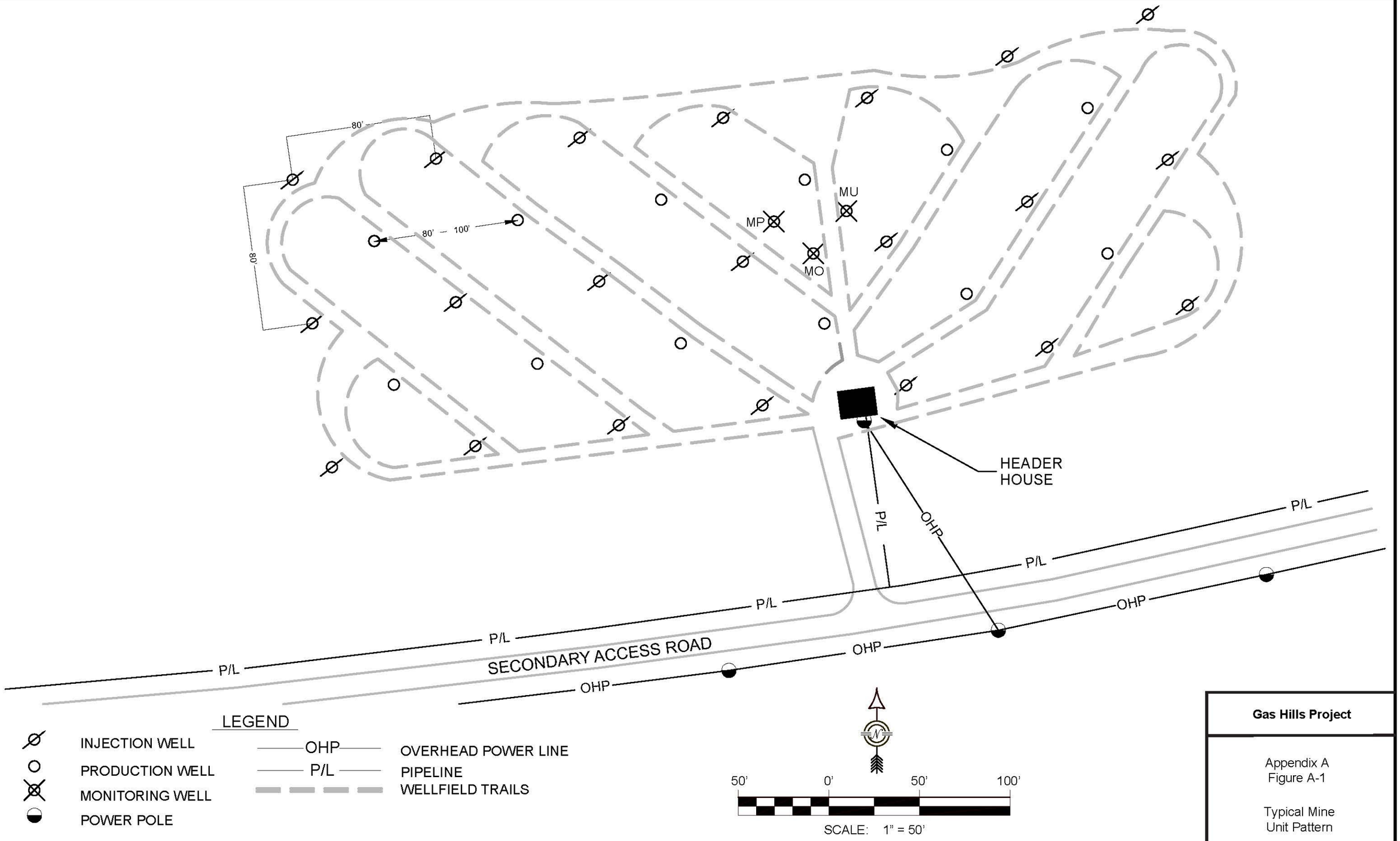

Source: PRI 2009, Figure 5.

Gas Hills Project

Appendix A
Figure A-1

Typical Mine
Unit Pattern

General Construction Requirements:

1. ALL EXCAVATION CUT SURFACES AND EMBANKMENTS SHALL BE COMPACTED TO 95% OF STANDARD PROCTOR DENSITY. PRIOR TO POND SITING THE ENGINEER SHALL DIRECT A SUBSURFACE INVESTIGATION PROGRAM TO IDENTIFY DEPTH TO CONSOLIDATED ROCK AND/OR COLLECT SAMPLES AND MEASUREMENTS TO DETERMINE CONSOLIDATION OF SUBSTRATE. UNSUITABLE CONDITIONS MAY RESULT IN THE RELOCATION OF THE POND.
2. GRANULAR BEDDING MATERIAL SHALL BE COMPACTED TO 90% OF STANDARD PROCTOR DENSITY.
3. SECONDARY LINER SHALL BE CONSTRUCTED OF NATIVE SOILS OR A SYNTHETIC LINER.
4. AN AUTOMATIC SUMP PUMP SHALL BE INSTALLED IN THE INSPECTION MANHOLE WITH A FLOAT SWITCH AND DISCHARGE PIPE BACK INTO THE EVAPORATION POND.
5. INFLUENT PIPES SHALL BE PLACED SUCH THAT THE PIPE INVERT IS AT LEAST SIX INCHES ABOVE THE MAXIMUM OPERATING LEVEL OF THE POND.
6. A VENTED CLEANOUT SHALL BE INSTALLED PRIOR TO THE ENTRANCE OF THE INFLUENT PIPE INTO THE PONDS, LOCATED CLOSE TO THE POND EMBANKMENT.
7. ALL EMBANKMENTS AND DISTURBED AREAS WHICH ARE NOT BELOW THE INTERNAL OPERATING LEVEL OF THE PONDS SHALL BE SEEDED WITH DRYLAND GRASSES TO PREVENT EROSION.
8. PERIMETER FENCES SHALL BE INSTALLED AROUND ALL PONDS, CAPABLE OF KEEPING LIVESTOCK AND WILDLIFE FROM ENTERING THE AREAS (NOT SHOWN).

CONSTRUCTION INSPECTION AND QUALITY CONTROL:

1. DURING CONSTRUCTION, SIDE INSPECTION AND QUALITY CONTROL TESTING SHALL BE COMPLETED UNDER THE DIRECTION OF A PROFESSIONAL ENGINEER DULY REGISTERED IN THE STATE OF WYOMING AND EXPERIENCED IN SIMILAR CONSTRUCTION REQUIREMENTS AND/OR METHODS.

PERFORATED PIPE SHALL MEET OR EXCEED THE FOLLOWING SPECIFICATIONS:

1. NOMINAL INSIDE DIAMETER 4 INCHES.
2. PIPE STIFFNESS RATING 50 PSI.
3. PIPE WORKING PRESSURE RATING WILL BE 160 PSI OR BETTER AND THE CONVEYANCE PIPE WILL BE HDPE PE 3408 OR BETTER.
4. WATER INLET AREA 2.95 SQUARE INCHES PER LINEAR FOOT.
5. MAXIMUM PERFORATION DIMENSIONS (MANUFACTURER); DRILLED HOLE DIAMETER 3/6 INCH; SLOTTED HOLES WIDTH 1/8 INCH (3.18 MM), LENGTH 7/8 INCH (22.2MM).
6. COMPLETELY ENCASED IN GEOTEXTILE FABRIC.

SITE LOCATION: PONDS 1 AND 2 ARE LOCATED IN FREMONT COUNTY; NW1/4, SECTION 28, T33N, R89W. PONDS 3, 4, 5, AND 6 ARE LOCATED IN FREMONT COUNTY; NE4/1, SECTION 28, T33N, R89W.

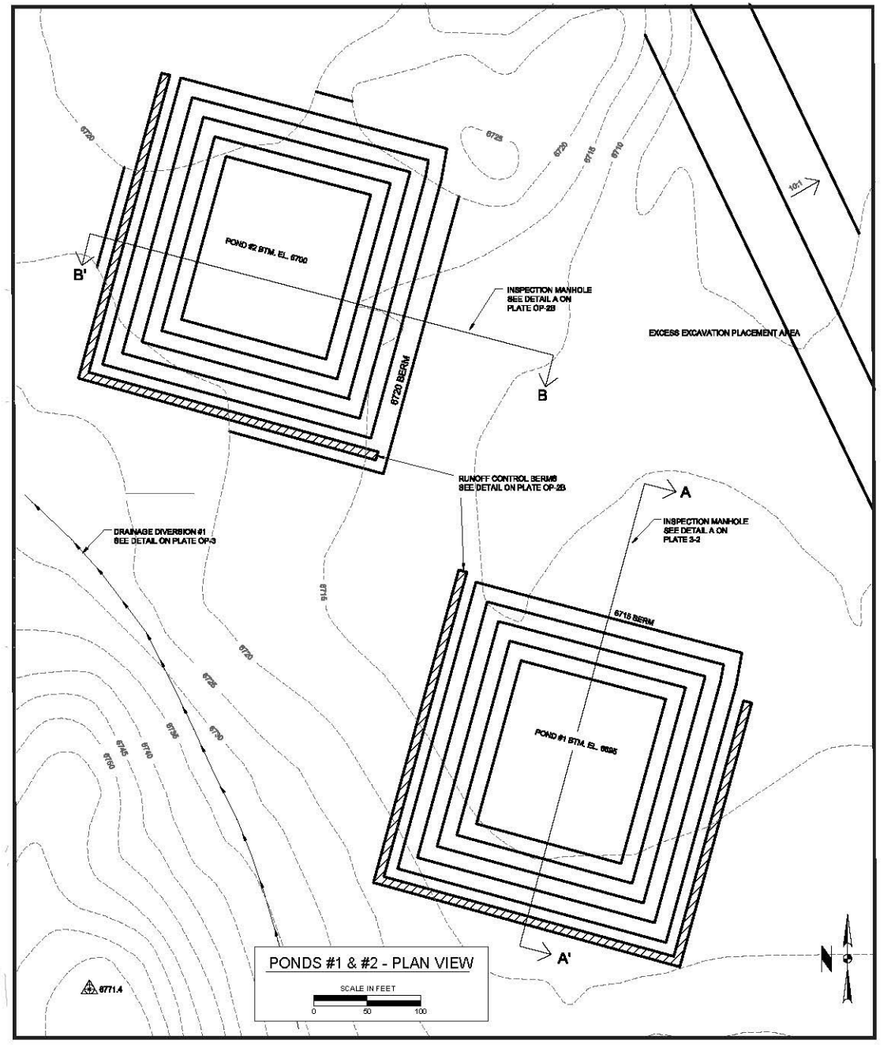

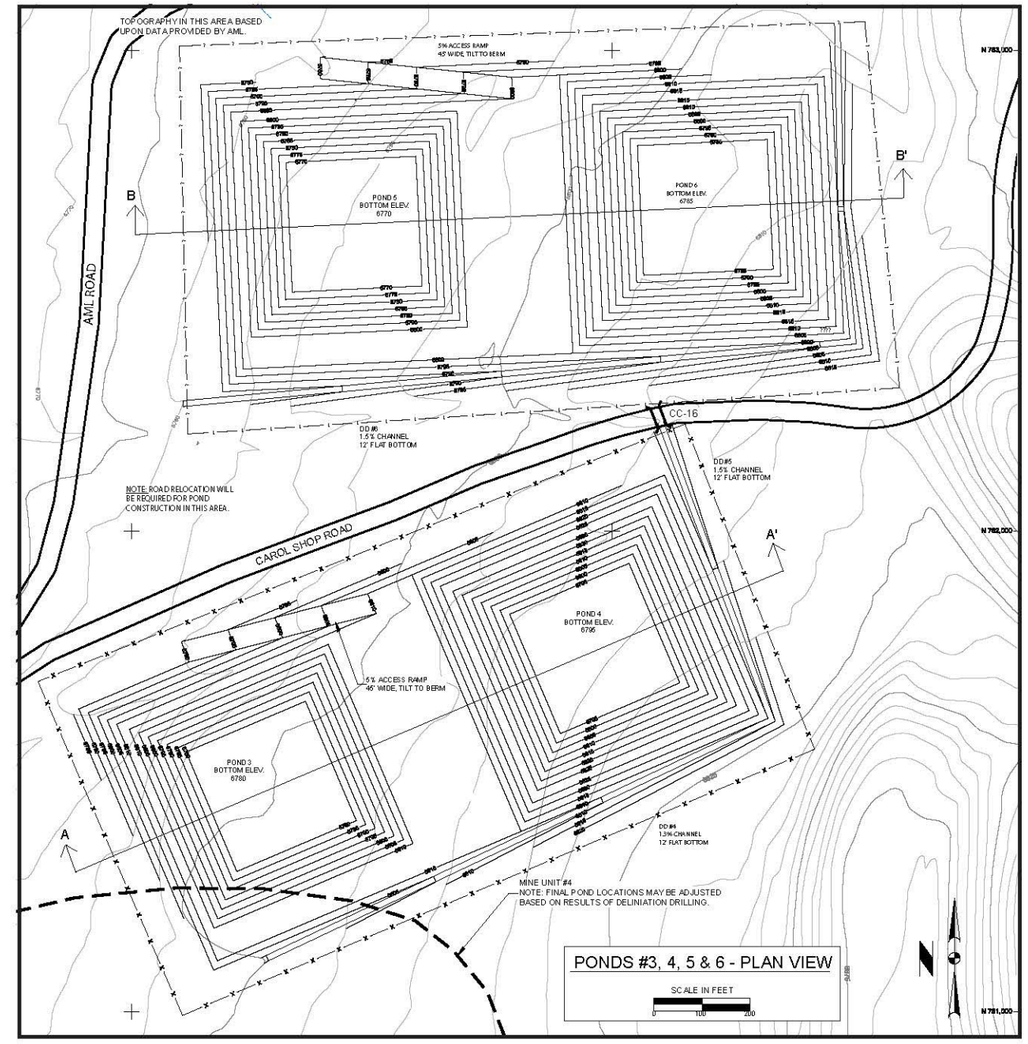

CONVEYANCE PIPE SHALL MEET OR EXCEED THE FOLLOWING SPECIFICATIONS:

1. NOMINAL INSIDE DIAMETER 4 INCHES.
2. PIPE STIFFNESS RATING 50 PSI.
3. HDPE OR SDR 35 PIPE.
4. WATER TIGHT CONNECTIONS.

PRIMARY LINERS SHALL MEET OR EXCEED THE FOLLOWING SPECIFICATIONS:

1. NOMINAL THICKNESS (GAUGE) SHALL BE AT LEAST 60 MIL (1.5 MM).
2. MINIMUM TENSILE STRENGTH AT BREAK SHALL BE AT LEAST 240 LBS.
3. MINIMUM PUNCTURE RESISTANCE SHALL BE AT LEAST 270 LBS.
4. LINER INSTALLATION, INCLUDING PERFORMANCE AND INSPECTION, SHALL MEET OR EXCEED THE LINER MANUFACTURER'S RECOMMENDATIONS, AND CURRENT APPLICABLE ASTM STANDARDS.
5. LINEAR DESIGN IS PRELIMINARY AND THE FINAL DESIGN MAY CHANGE. THE POND LINER SYSTEM WILL CONFORM TO THE CRITERIA OUTLINED IN THE CFR'S.
6. SECTION 3.5.6 OF THE OPERATIONS PLAN PRESNTS SPECIFICATION SOF GRANULAR MATERIALS ABOVE, BELOW, AND BETWEEN LINERS. IN SUMMARY, GRANULAR BACKFILL SHALL CONSIST OF ROUNDED SAND OR GRAVEL 100% PASSING ¾ INCH SIEVE AND NO MORE THAN 10% ASSING THE #200 SIEVE AND HAVING A HYDRAULIC CONDUCTIVITY OF 10-1 CM/SEC.

Source: PRI 2009, Plates OP7-2A.

Gas Hills Project

Appendix A
Figure A-2

Evaporation Pond Design

MAIN ACCESS ROADS

TYPICAL CROSS SECTION

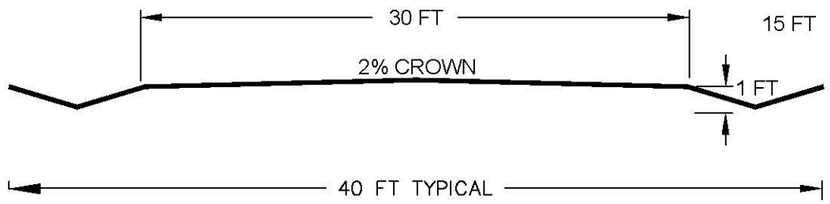

DITCH SLOPES 3:1 OR FLATTER
SLOPE VARIES TO MATCH TOPOGRAPHY
TYPICAL ROW 60 FT

ROAD DESIGN CRITERIA

DESIGN USE	TWO-WAY TRAFFIC, INCLUDING HEAVY TRUCK TRAFFIC.
MAXIMUM SPEED	40 MPH MAXIMUM, REDUCE SPEEDS FOR AREAS OF LIMITED VISIBILITY AND ROAD JUNCTIONS.
MAXIMUM GRADE	8% FOR NO MORE THAN 2,000 FEET; 6% OVERALL FOR NORMAL TERRAIN CONDITIONS.
ROADWAY WIDTH	30 FOOT RUNNING SURFACE WITHIN 60 FOOT ROW.
MINIMUM PITCH	2% FROM CENTERLINE.
MINIMUM CURVE	MINIMUM CURVE RADIUS 500 FEET WITH A 5 DEGREE CENTRAL ANGLE.
ROAD DITCH	MINIMUM 1 FOOT DEPTH, 3:1 (H; v) SIDE SLOPES, AT 2 TO 4% GRADES, VARY TO MATCH TOPO.
CULVERT DESIGN	25 YEAR DESIGN, MINIMUM SIZE 18 INCHES.
SURFACING	NO SURFACING FOR SP, SW, GC, GM, GP, GW - ALL OTHERS SOILS 4 INCHES GRAVEL SURFACING.
MAINTENANCE	GRADING TO MAINTAIN CROWN, DITCHING, AND SURFACING.

NOT TO SCALE

SECONDARY ACCESS ROADS

TYPICAL CROSS SECTION

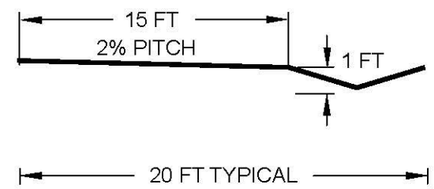

DITCH SLOPES 3:1 OR FLATTER
SLOPE VARIES TO MATCH TOPOGRAPHY
TYPICAL ROW 40 FT

ROAD DESIGN CRITERIA

DESIGN USE	ONE-WAY TRAFFIC, INCLUDING LIGHT TRUCK TRAFFIC.
MAXIMUM SPEED	30 MPH MAXIMUM, REDUCE SPEEDS FOR AREAS OF LIMITED VISIBILITY AND ROAD JUNCTIONS.
MAXIMUM GRADE	8% OVERALL FOR NORMAL TERRAIN CONDITIONS.
ROADWAY WIDTH	15 FOOT RUNNING SURFACE WITHIN 40 FOOT ROW; TURNOUTS EVERY 1,000 FT.
MINIMUM PITCH	2% FROM UPHIL SIDE OF ROAD.
MINIMUM CURVE	MINIMUM CURVE RADIUS 200 FEET.
ROAD DITCH	MINIMUM 1 FOOT DEPTH, 3:1 (h: v) SIDE SLOPES, AT 2 TO 4% GRADES, VARY TO MATCH TOPO.
CULVERT DESIGN	10 YEAR DESIGN, MINIMUM SIZE 18 INCHES.
SURFACING	NO SURFACING MOST AREAS; REQUIRED ONLY IN AREAS OF POOR DRAINAGE AND SOILS.
MAINTENANCE	GRADING TO MAINTAIN PITCH, DITCHING, AND SURFACE.

NOT TO SCALE

NOTES

1. MAIN ACCESS ROADS WILL BE ESTABLISHED AND MAINTAINED FROM THE GAS HILLS ROAD TO ALL SATELLITE FACILITIES.
2. SECONDARY ACCESS ROADS WILL BE ESTABLISHED AND MAINTAINED IN ALL ACTIVE WELL FIELDS.
3. TO THE EXTENT PRACTICAL,ALL PIPELINES AND UTILITIES WILL BE LOCATED WITHIN THE MAIN AND SECONDARY ACCESS ROAD ROW.
4. WHERE REQUIRED, GRAVEL SURFACING SHALL BE 3 INCH MINUS PIT RUN OF THE FOLLOWING SOIL TYPES; SW, SP, GP, GW.
5. WATERING FOR DUST CONTROL WILL BE USED AS NECESSARY.
6. WATER USED FOR DUST CONTROL SHALL BE FROM AN APPROVED AND PERMITTED SOURCE.
7. ROAD SIGNAGE SHALL MEET UNIFORM TRAFFIC CONTROL STANDARDS INCLUDING SIGNAGE FOR SPEED LIMIT, EQUIPMENT CROSSING, AND STOP AND/OR YIELD AT ALL INTERSECTIONS.
8. TOPSOIL DISTURBED ALONG THE MAIN ACCESS ROAD WILL BE STRIPPED AND STOCKPILED FOR FUTURE RECLAMATION IN A MANNER WHICH PROTECTS THE TOPSOIL RESOURCE FROM CONTAMINATION AND/OR EROSION.
9. TOPSOIL ALONG SECONDARY ACCESS ROADS (WITHIN WELL FIELD AREAS) WILL BE STRIPPED TO AN AVERAGE DEPTH OF 6 INCHES UNLESS SOILS HAVE BEEN DEMONSTRATED TO BE UNSUITABLE AS A PLANT GROWTH MEDIUM SALVAGED TOPSOIL WILL BE STOCKPILED IN A MANNER WHICH PROTECTS THE TOPSOIL RESOURCE FROM CONTAMINATION AND/OR EROSION UNTIL USED FOR FINAL RECLAMATION.
10. WHERE POSSIBLE UTILITIES INCLUDING POWER LINES AND PIPELINES WILL BE LOCATED WITHIN THE ROW ON EITHER SIDE OF THE MAIN AND SECONDARY ACCESS ROADS.

Gas Hills Project

Appendix A
Figure A-3

Typical Road Construction

Source: PRI 2009, Plate OP-4.

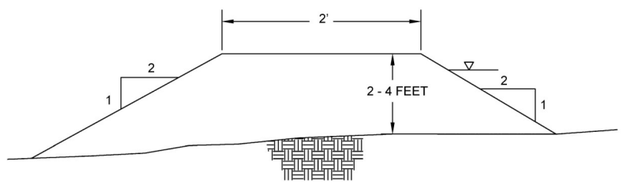

TYPICAL BERM CROSS SECTION

NOT TO SCALE

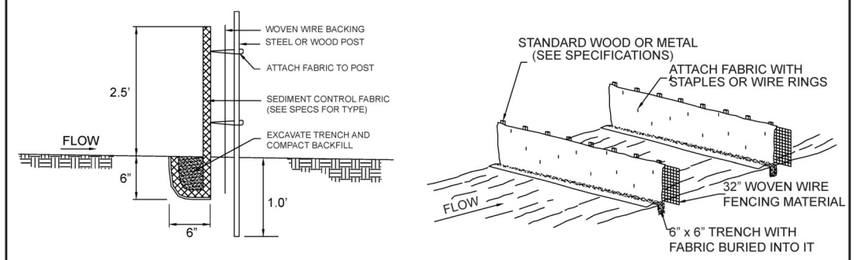

SEDIMENT CONTROL FENCE DETAIL

NOT TO SCALE

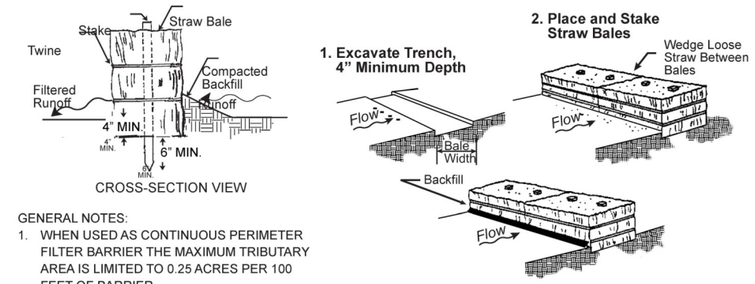

GENERAL NOTES:

1. WHEN USED AS CONTINUOUS PERIMETER FILTER BARRIER THE MAXIMUM TRIBUTARY AREA IS LIMITED TO 0.25 ACRES PER 100 FEET OF BARRIER
2. INSPECT, REPAIR, AND REPLACE (IF NECESSARY) THE FILTERS AFTER EACH STORM EVENT.

TYPICAL STRAW BALE DIKE

NOT TO SCALE

18' TO 30" DIA. CULVERT DETAILS

NOTE:
FILL DEPTH (H) SHALL BE A MINIMUM OF 3 FT. FOR SECONDARY ACCESS ROADS AND 4 FT. FOR PRIMARY ACCESS ROADS.

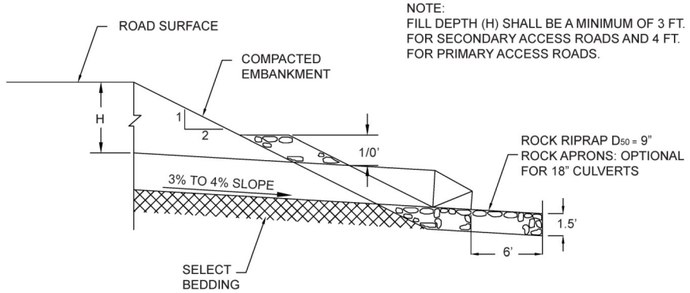

CULVERT OUTLET PROFILE DETAIL

NOT TO SCALE

36" TO 48" DIA. CULVERT DETAILS

NOTE:
FILL DEPTH (H) SHALL BE A MINIMUM OF 3 FT. FOR SECONDARY ACCESS ROADS AND 4 FT. FOR PRIMARY ACCESS ROADS.

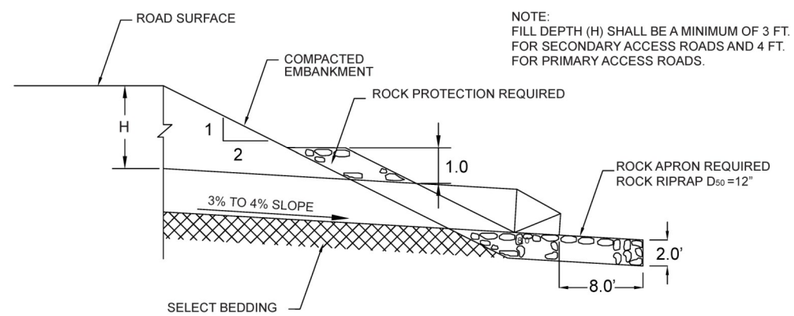

CULVERT OUTLET PROFILE DETAIL

NOT TO SCALE

NOTES

GENERAL CONSTRUCTION REQUIREMENTS:

1. ALL EXCAVATION CUT SURFACES, EMBANKMENTS, AND TRENCH BACKFILL MATERIALS SHALL BE COMPACTED TO 90% STANDARD PROCTOR DENSITY.
2. SELECT BEDDING MATERIAL SHALL BE COMPACTED TO 90% OF STANDARD PROCTOR DENSITY.
3. SELECT BEDDING MATERIAL SHALL CONSIST OF SELECTIVELY HANDLED SANDS AND GRAVELS OR AN EQUIVALENT SOIL MATERIAL WITH NO PARTICLES GREATER THAN 1-INCH, AT OPTIMUM MOISTURE CONTENT FOR COMPACTION.
4. WHERE WET AND UNSTABLE SOIL INCAPABLE OF SUPPORTING THE CULVERT IS ENCOUNTERED, SUCH MATERIAL SHALL BE REMOVED, AND REPLACED WITH SELECT BEDDING MATERIAL.
5. TRENCH BACKFILL SHALL CONSIST OF SELECTED EXCAVATION OR BORROW MATERIALS WITH NO LARGE ROCKS, AND AT OPTIMUM MOISTURE CONTENT FOR COMPACTION.
6. TRENCH BACKFILL SHALL BE PLACED IN LIFTS NOT EXCEEDING 6" IN COMPACTED DEPTH, AND BROUGHT UP EVENLY ON BOTH SIDES OF THE CULVERT FOR ITS FULL LENGTH.
7. ROCK PROTECTION AND ROCK APRONS SHALL CONSIST OF WELL-GRADED DURABLE MATERIALS WITH A D50 DIAMETER OF 9" OR 12" AS SHOWN ON THE PLANS.
8. METAL OR PLASTIC CULVERT END SECTIONS, CONSISTING OF THE SAME MATERIAL TYPE AS THE ATTACHED CULVERT, WILL BE INSTALLED ON THE CULVERT INLETS AND OUTLETS.

CORRUGATED STEEL PIPE AND END SECTIONS SHALL MEET THE FOLLOWING SPECIFICATIONS:

1. CONFORM TO THE APPLICABLE SECTIONS OF AASHTO M 36 AND EITHER AASHTO M 218 OR AASHTO M 274 FOR THE SPECIFIED SECTIONAL DIMENSIONS AND THICKNESS.
2. THE SHEET THICKNESS OF THE STEEL PIPE SHALL BE A MINIMUM OF 14 GAGE.
3. CORRUGATED STEEL PIPE MAY BE USED FOR ALL SIZES OF CULVERTS.

CORRUGATED POLYETHYLENE PIPE AND END SECTIONS SHALL MEET THE FOLLOWING SPECIFICATIONS:

1. CONFORM TO THE APPLICABLE SECTIONS OF AASHTO M 294-92 FOR THE SPECIFIED SECTIONAL DIMENSIONS AND THICKNESS.
2. CORRUGATED POLYETHYLENE PIPE MAY BE USED FOR CULVERT SIZES 18", 24" AND 36" ONLY FOR CULVERTS GREATER THAN 36", STEEL SHALL BE USED.

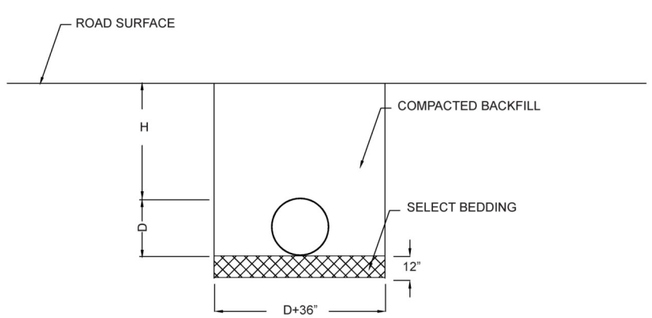

CULVERT TYPICAL CROSS SECTION

NOT TO SCALE

CULVERT SIZING TABLE

CULVERT DIAMETER (IN)	MINIMUM FILL (FT)	CULVERT CAPACITY (CFS)
PRIMARY ACCESS ROADS		
18	4	18
24	4	35
30	4	60
36	4	92
42	4	130
48	4	176
SECONDARY ACCESS ROADS		
18	3	16
24	3	32
30	3	55
36	3	82

Source: PRI 2009, Plate OP-5.

Gas Hills Project

Appendix A
Figure A-4

Typical Culvert Installation

Appendix B

PFYC System

U.S. DEPARTMENT OF THE INTERIOR **BUREAU OF LAND MANAGEMENT**
National

UNITED STATES DEPARTMENT OF THE INTERIOR
BUREAU OF LAND MANAGEMENT
Washington, D.C. 20240

October 15, 2007

In Reply Refer To:
1610, 8270 (240) P

EMS TRANSMISSION 10/18/2007
Instruction Memorandum No. 2008-009
Expires: 09/30/2009

To: All State Directors
From: Assistant Director, Renewable Resources and Planning
Subject: Potential Fossil Yield Classification (PFYC) System for Paleontological Resources on Public Lands

Program Areas: Paleontological Resources Management, Resource Management Planning, Lands and Realty Management, Minerals Management, Range

Purpose: This Instruction Memorandum (IM) transmits the Bureau of Land Management (BLM) classification system for paleontological resources on public lands. The classification system is based on the potential for the occurrence of significant paleontological resources in a geologic unit, and the associated risk for impacts to the resource based on Federal management actions. Copies of the classification system and implementation guidance are attached.
Policy/Action: The Potential Fossil Yield Classification (PFYC) system will be used to classify paleontological resource potential on public lands in order to assess possible resource impacts and mitigation needs for Federal actions involving surface disturbance, land tenure adjustments, and land-use planning. Implementation of the PFYC system will not mandate changes to existing land use plans, project plans, or other completed efforts. Integration into plans presently being developed is discretionary. All efforts subsequent to issuance of this IM should incorporate the PFYC system. This system will replace the current Condition Classification in the Handbook (H-8270-1) for Paleontological Resource Management.
Timeframe: This guidance is effective immediately for all BLM offices.
Background: This classification system for paleontological resources is intended to provide a more uniform tool to assess potential occurrences of paleontological resources and evaluate possible impacts. It uses geologic units as base data, which is more readily available to all users. It is intended to be applied in broad approach for planning efforts, and as an intermediate step in evaluating specific projects. This is part of a larger effort to update the Handbook H-8270-1 (General Procedural Guidance for Paleontological Resource Management) Chapter III (Assessment & Mitigation) and Chapter II.A.2 and will be incorporated into that Handbook update.
Impact on Budget: Costs for the initial classification of geologic units for those States that have not already determined the classification will be borne by each Office. Implementation of the PFYC system will have no additional costs.
Manual/Handbook Affected: Supersedes H-8270-1 (General Procedural Guidance for Paleontological Resource Management) Chapter II.A.2.
Coordination: The classification system is the product of the BLM's regional paleontologists, other BLM employees, and outside reviewers. This system is very similar to the Forest Service's Fossil Yield Potential Classification and will enable closer coordination of paleontological resource management between the agencies.

Contact: For questions regarding application of this policy and guidance, please contact Lucia Kuizon, National Paleontologist, at (202) 452-5107 or lkuizon@blm.gov.

Signed by:
Todd S. Chirstensen

Authenticated by:
Robert M. Williams

Acting, Deputy Assistant Director
Renewable Resources and Planning

Division of IRM Governance

2 Attachments:
1 – The Potential Fossil Yield Classification (PFYC) System (4 pp)
2 – Guidance for Implementing the PFYC System (5 pp)

Potential Fossil Yield Classification (PFYC) System.

Occurrences of paleontological resources are closely tied to the geologic units (i.e., formations, members, or beds) that contain them. The probability for finding paleontological resources can be broadly predicted from the geologic units present at or near the surface. Therefore, geologic mapping can be used for assessing the potential for the occurrence of paleontological resources.

Using the Potential Fossil Yield Classification (PFYC) system, geologic units are classified based on the relative abundance of vertebrate fossils or scientifically significant invertebrate or plant fossils and their sensitivity to adverse impacts, with a higher class number indicating a higher potential. This classification is applied to the geologic formation, member, or other distinguishable unit, preferably at the most detailed mappable level. It is not intended to be applied to specific paleontological localities or small areas within units. Although significant localities may occasionally occur in a geologic unit, a few widely scattered important fossils or localities do not necessarily indicate a higher class; instead, the relative abundance of significant localities is intended to be the major determinant for the class assignment.

The PFYC system is meant to provide baseline guidance for predicting, assessing, and mitigating paleontological resources. The classification should be considered at an intermediate point in the analysis, and should be used to assist in determining the need for further mitigation assessment or actions.

The descriptions for the classes below are written to serve as guidelines rather than as strict definitions. Knowledge of the geology and the paleontological potential for individual units or preservational conditions should be considered when determining the appropriate class assignment. Assignments are best made by collaboration between land managers and knowledgeable researchers.

Class 1 – **Very Low**. Geologic units that are not likely to contain recognizable fossil remains.

- Units that are igneous or metamorphic, excluding reworked volcanic ash units.
- Units that are Precambrian in age or older.

(1) Management concern for paleontological resources in Class 1 units is usually negligible or not applicable.

(2) Assessment or mitigation is usually unnecessary except in very rare or isolated circumstances.

The probability for impacting any fossils is negligible. Assessment or mitigation of paleontological resources is usually unnecessary. The occurrence of significant fossils is non-existent or extremely rare.

Class 2 – **Low**. Sedimentary geologic units that are not likely to contain vertebrate fossils or scientifically significant nonvertebrate fossils.

- Vertebrate or significant invertebrate or plant fossils not present or very rare.
- Units that are generally younger than 10,000 years before present.
- Recent aeolian deposits.
- Sediments that exhibit significant physical and chemical changes (i.e., diagenetic alteration).

(1) Management concern for paleontological resources is generally low.

(2) Assessment or mitigation is usually unnecessary except in rare or isolated circumstances.

The probability for impacting vertebrate fossils or scientifically significant invertebrate or plant fossils is low. Assessment or mitigation of paleontological resources is not likely to be necessary. Localities containing important resources may exist, but would be rare and would not influence the classification. These important localities would be managed on a case-by-case basis.

Class 3 – **Moderate** or **Unknown**. Fossiliferous sedimentary geologic units where fossil content varies in significance, abundance, and predictable occurrence; or sedimentary units of unknown fossil potential.

- Often marine in origin with sporadic known occurrences of vertebrate fossils.
- Vertebrate fossils and scientifically significant invertebrate or plant fossils known to occur intermittently; predictability known to be low.

  (or)
- Poorly studied and/or poorly documented. Potential yield cannot be assigned without ground reconnaissance.

Class 3a – **Moderate Potential.** Units are known to contain vertebrate fossils or scientifically significant nonvertebrate fossils, but these occurrences are widely scattered. Common invertebrate or plant fossils may be found in the area, and opportunities may exist for hobby collecting. The potential for a project to be sited on or impact a significant fossil locality is low, but is somewhat higher for common fossils.

Class 3b – **Unknown Potential.** Units exhibit geologic features and preservational conditions that suggest significant fossils could be present, but little information about the paleontological resources of the unit or the area is known. This may indicate the unit or area is poorly studied, and field surveys may uncover significant finds. The units in this Class may eventually be placed in another Class when sufficient survey and research is performed. The unknown potential of the units in this Class should be carefully considered when developing any mitigation or management actions.

(1) Management concern for paleontological resources is moderate; or cannot be determined from existing data.

(2) Surface-disturbing activities may require field assessment to determine appropriate course of action.

This classification includes a broad range of paleontological potential. It includes geologic units of unknown potential, as well as units of moderate or infrequent occurrence of significant fossils. Management considerations cover a broad range of options as well, and could include pre-disturbance surveys, monitoring, or avoidance. Surface-disturbing activities will require sufficient assessment to determine whether significant paleontological resources occur in the area of a proposed action, and whether the action could affect the paleontological resources. These units may contain areas that would be appropriate to designate as hobby collection areas due to the higher occurrence of common fossils and a lower concern about affecting significant paleontological resources.

Class 4 – **High**. Geologic units containing a high occurrence of significant fossils. Vertebrate fossils or scientifically significant invertebrate or plant fossils are known to occur and have been documented, but may vary in occurrence and predictability. Surface disturbing activities may adversely affect paleontological resources in many cases.

Class 4a – Unit is exposed with little or no soil or vegetative cover. Outcrop areas are extensive with exposed bedrock areas often larger than two acres. Paleontological resources may be susceptible to adverse impacts from surface disturbing actions. Illegal collecting activities may impact some areas.

Class 4b – These are areas underlain by geologic units with high potential but have lowered risks of human-caused adverse impacts and/or lowered risk of natural degradation due to moderating circumstances. The bedrock unit has high potential, but a protective layer of soil, thin alluvial material, or other conditions may lessen or prevent potential impacts to the bedrock resulting from the activity.

- Extensive soil or vegetative cover; bedrock exposures are limited or not expected to be impacted.
- Areas of exposed outcrop are smaller than two contiguous acres.
- Outcrops form cliffs of sufficient height and slope so that impacts are minimized by topographic conditions.
- Other characteristics are present that lower the vulnerability of both known and unidentified paleontological resources.

(1) Management concern for paleontological resources in Class 4 is moderate to high, depending on the proposed action.

(2) A field survey by a qualified paleontologist is often needed to assess local conditions.

(3) Management prescriptions for resource preservation and conservation through controlled access or special management designation should be considered.

(4) Class 4 and Class 5 units may be combined as Class 5 for broad applications, such as planning efforts or preliminary assessments, when geologic mapping at an appropriate scale is not available. Resource assessment, mitigation, and other management considerations are similar at this level of analysis, and impacts and alternatives can be addressed at a level appropriate to the application.

The probability for impacting significant paleontological resources is moderate to high, and is dependent on the proposed action. Mitigation considerations must include assessment of the disturbance, such as removal or penetration of protective surface alluvium or soils, potential for future accelerated erosion, or increased ease of access resulting in greater looting potential. If impacts to significant fossils can be anticipated, on-the-ground surveys prior to authorizing the surface disturbing action will usually be necessary. On-site monitoring or spot-checking may be necessary during construction activities.

Class 5 – **Very High**. Highly fossiliferous geologic units that consistently and predictably produce vertebrate fossils or scientifically significant invertebrate or plant fossils, and that are at risk of human-caused adverse impacts or natural degradation.

Class 5a – Unit is exposed with little or no soil or vegetative cover. Outcrop areas are extensive with exposed bedrock areas often larger than two contiguous acres. Paleontological resources are highly susceptible to adverse impacts from surface disturbing actions. Unit is frequently the focus of illegal collecting activities.

Class 5b – These are areas underlain by geologic units with very high potential but have lowered risks of human-caused adverse impacts and/or lowered risk of natural degradation due to moderating circumstances. The bedrock unit has very high potential, but a protective layer of soil, thin alluvial material, or other conditions may lessen or prevent potential impacts to the bedrock resulting from the activity.

- Extensive soil or vegetative cover; bedrock exposures are limited or not expected to be impacted.
- Areas of exposed outcrop are smaller than two contiguous acres.
- Outcrops form cliffs of sufficient height and slope so that impacts are minimized by topographic conditions.
- Other characteristics are present that lower the vulnerability of both known and unidentified paleontological resources.

(1) Management concern for paleontological resources in Class 5 areas is high to very high.

(2) A field survey by a qualified paleontologist is usually necessary prior to surface disturbing activities or land tenure adjustments. Mitigation will often be necessary before and/or during these actions.

(3) Official designation of areas of avoidance, special interest, and concern may be appropriate.

The probability for impacting significant fossils is high. Vertebrate fossils or scientifically significant invertebrate fossils are known or can reasonably be expected to occur in the impacted area. On-the-ground surveys prior to authorizing any surface disturbing activities will usually be necessary. On-site monitoring may be necessary during construction activities.

Guidance for implementing the Potential Fossil Yield Classification (PFYC) System

Introduction

The Potential Fossil Yield Classification (PFYC) system will aid in assessing the potential for discovery of significant paleontological resources or the impact of surface disturbing activities to these resources.

It is intended to assist in determining proper mitigation approaches for surface disturbing activities, disposal or acquisition actions, recreation possibilities or limitations, and other BLM-approved activities. It will provide consistent information for input and analysis during planning efforts. The PFYC system can also highlight the areas most likely to be a focus of paleontological research efforts or illegal collecting. It is hoped that this system will allow BLM to direct management efforts toward potentially significant areas and reduce efforts in areas of lower potential.

This classification system was originally developed by the Forest Service's Paleontology Center of Excellence and the Region 2 (FS) Paleontology Initiative in 1996. Modifications were made by the BLM's Paleontological Resources staff in subsequent years.

Paleontological resources are closely associated with the geologic rock units containing them; that is, fossils are found more frequently in some rock units than others. The management of paleontological resources can thus be tied to the geologic units present at or near the ground surface, with greater management emphasis aimed at higher potential geologic units.

Uses

This PFYC system is utilized for land use planning efforts and for the preliminary assessment of potential impacts and proper mitigation needs for specific projects. It is intended to provide a tool to assess potential occurrences of significant paleontological resources. It is meant to be applied in broad approach for planning efforts, and as an intermediate step in evaluating specific projects.

There are five Classes with Class 1 being Very Low Potential and Class 5 being Very High Potential. Although granite, lava beds, and other igneous or metamorphic rock types are usually considered to be void of any fossils, outcrops of these rocks may have fissure fillings, cave-like structures, sinkholes, and other features that may preserve significant paleontological resources or information, so the potential is not zero; therefore Class 1 is applied to these rock types usually considered not to contain fossil resources.

It is intended that this system replace the current Condition Classification in the Handbook (H-8270-1), for Paleontological Resource Management. In general, the following is a comparison of the Condition Classification rankings to the new PFYC Classes:

Condition (from H-8270-1)	PFYC Class (this Instruction Memorandum)
Condition 1 – Areas known to contain vertebrate fossils or noteworthy occurrences of invertebrate or plant fossils. (Note: this refers to known localities or groups of localities)	PFYC Class 4 (High) or Class 5 (Very High), based on geologic unit.
Condition 2 – Areas with exposures of geological units or settings that have high potential to contain vertebrate fossils or noteworthy occurrences of invertebrate or plant fossils.	PFYC Class 3 (Moderate), Class 4 (High), or Class 5 (Very High), based on geologic unit.
Condition 3 – Areas that are very unlikely to produce vertebrate fossils or noteworthy occurrences of invertebrate or plant fossils.	PFYC Class 1 (Very Low) or Class 2 (Low).

Assignment of Classes

A separate class ranking is assigned to each recognized geologic formation or member present at the surface. Deposits of young alluvium (post-Pleistocene) or thick soils can often be ignored. However, geologic mapping may not separate the older Pleistocene alluvium which, may contain significant vertebrate fossils, and thus these units need to be carefully considered. Available geologic mapping, depending on map scale, may combine multiple formations or units. In these cases, the assigned classification should use the highest class of those included units. For ease of application, the classifications should be integrated into a Geographic Information System (GIS) based geologic map.

The classification is initially determined by the Regional Paleontologist; the State Office Paleontology Lead in collaboration with the Regional Paleontologist; or by knowledgeable individuals from a paleontology museum, university paleontology department, or consulting firm working under a formal agreement. Several States have already completed an initial classification and are incorporating the system into new planning and mitigation efforts.

To maintain consistency in planning efforts, mitigation requirements, and other management approaches, the classification should be applied to each formation on a state-wide basis, and even across State boundaries. But in some situations, geologic characteristics within formations may change across the State or region and may alter the potential for fossil occurrence. These differences may be a characteristic of the formation, be variable in occurrence, and unmappable at a workable scale; or may indicate a regional gradient, where a formation is highly fossiliferous in one portion of the State, but has lowered potential in another area. A variable occurrence in potential may be included in the general information about the formation. A regional gradient can be addressed by assigning a different class for separate areas.

Multiple class assignments for an individual formation should be applied in consultation with the State Office to maintain consistency across Field Office boundaries.

Over time, additional information may be acquired or developed that may suggest that a change in the class assignment is appropriate, especially from the Unknown Class (3b) to a higher or lower class. The classification should reflect the most current information, and recent research or discoveries may indicate a change is warranted. However, any changes should be measured against existing applications or use of the current classification, such as usage in Resource Management Plans (RMPs) or other planning or management documents.

Application

In planning documents and other general applications, these classes allow for uniform discussion of the paleontologic resource, potential adverse impacts, and management approaches. Assessment of general conditions, such as acres or percentages of each class, or spatial identification of important areas can be determined and presented in simple manner. Identification of areas of potential concern with other resources can be identified using GIS mapping or explained in the text body in simple fashion.

The PFYC classes may also be utilized to assess the possibility of adverse or beneficial impacts from land tenure adjustment (disposal or acquisition) proposals prior to on-the-ground surveys.

A primary purpose of the PFYC is to assess the possible impacts from surface disturbing activities and help determine the need for pre-disturbance surveys and monitoring during construction. This assessment should be an intermediate step in the analysis process; and local conditions such as amount of exposed bedrock should be considered when final mitigation needs are determined. The determination should also be supplemented by occurrences of known fossil localities and local geologic and topographic knowledge.

Mitigation Needs Assessment

Impacts of most surface-disturbing activities, and the need for mitigation efforts, are addressed by the local Field Office. Some larger actions, such as major pipeline projects, may be handled by the State Office, or even as multi-State projects. In all these cases, the assessment of impacts to paleontological resources and need for mitigation can be addressed in similar fashion through a progression of steps. The following outlines the general steps used to apply the PFYC system to this mitigation process.

1. **Identify the proposed action and affected area.** Consider the area directly impacted by the action, as well as areas that may be impacted by vehicle drive ways, equipment parking, storage areas, and increased access. Also consider the depth of disturbance to determine possible subsurface impacts.

2. Identify the potential impacts to paleontological resources. Determine the geologic units that may be impacted and the associated PFYC classes, and consult other sources of information about known localities or paleontological research that may have been done previously.

Based on the PFYC class and any additional resource information, determine the probability of impacting significant paleontological resources. If known localities are in the area of possible impact, determine if those localities can be avoided by altering the proposed action, such as repositioning a well pad location or rerouting a pipeline around a locality.

3. Determine the need for field survey or other mitigation efforts. On-the-ground field surveys, on-site monitoring, spot-checking at key times during construction, or locality avoidance are all possible mitigation approaches to lessen adverse impacts.

- If the PFYC class for the impacted area is Class 1 or 2, and there are no known localities within the area, no further assessment is typically needed.
- If a Class 3a (Moderate Potential) unit underlies the area, the local geologic conditions should be considered, as well as any known localities in the region. It may be necessary to consult with the Regional Paleontologist or other qualified paleontologist to assess the local conditions.
- If a Class 3b (Unknown Potential) unit underlies the area, it may be appropriate to require an on-site preliminary assessment by a qualified paleontologist.
- If the area is a Class 4b (buried bedrock with High Potential) or Class 5b (buried bedrock with Very High Potential), an assessment of the possible impacts to bedrock units must be made. If the proposed action will not penetrate the protective soil or alluvial layer, a pre-work survey or monitoring during the activity may not be necessary. If the potential exists to remove the protective layer and impact the bedrock unit below, it may be prudent to require a pre-work field survey and/or on-site monitoring during disturbance or spot-checks at key times. Because the bedrock unit is typically buried for much of the area in question, a pre-work survey may not always be necessary, as the fossil material may not be visible. However, it may then be more important to have an on-site monitor during disturbance or spot-checks at key times.
- If it is a Class 4a (exposed bedrock with High Potential) or Class 5a (exposed bedrock with Very High Potential) area, it will be necessary in most (Class 4a) or almost all (Class 5a) situations to require a pre-activity field survey of the areas directly and indirectly impacted.

Larger projects may impact multiple geologic units with differing PFYC Classes. In those cases, field survey and monitoring may be applied at differing levels. For example, surveys may be appropriate only on the Class 4 and 5 formations and not the Class 2 formations along a pipeline project. Careful mapping and detailed field notes should reflect the differing survey/monitoring intensities, and should be included in the consultant's report to BLM.

4. Conduct Pre-work Field Survey. Field surveys are almost always needed for Class 4 and 5 units, especially exposed bedrock areas (Class 4a and 5a). Class 3 units may or may not require a survey. Local conditions, such as vegetated areas or pockets of bedrock exposure, may affect the need and intensity of field surveys.

The consultant is required to submit a report of findings after completion of the field survey. In addition to standard reporting information, the report should contain the consultants' recommendations for further mitigation, and this recommendation should be considered when determining the need for and type of on-site monitoring or locality avoidance.

5. Monitor during disturbance activities. Those areas that have been determined to have a Very High potential (Class 5) for adverse impacts should typically be monitored at all times when surface-disturbing activities are occurring. If the area has a High potential (Class 4), it may be appropriate to examine the exposed unit, including the spoil or storage piles, only at key times. These times are dependent on the activity, but typically are: when bedrock is initially exposed, occasionally during active excavation, and when the maximum exposure is reached and before backfilling has begun. This monitoring and spot-checking must be performed by a permitted paleontologist or their BLM-approved representative. The monitor has the authority to briefly pause any activity to inspect a possible find. These pauses are intended to allow for identification of possible fossil resources and should only last a few minutes to a couple hours.

6. Evaluate significant finds. If significant paleontological resources are discovered during surface disturbing actions or at any other time, the proponent or any of his agents must: (a) stop work immediately at that site; (b) contact the appropriate BLM representative, typically the project inspector or Authorized Officer, as soon as possible; and (c) make every effort to protect the site from further impacts, including looting, erosion, or other human or natural damage. The BLM or designated paleontologist will evaluate the discovery and take action to protect or remove the resource within 10 working days. Work may not resume at that location until approved by the official BLM representative. In some cases, such as recovery of a dinosaur, further activity at that site may be delayed until the discovered fossils are recovered, or until the project is modified to avoid impacting the find. Because of the potential for lengthy delays, the BLM should assure that the project proponent understands this possibility prior to approval to begin work.

These steps are included here to provide general guidance, and it may be appropriate to modify or skip them for various situations. However, a brief discussion of the background and reason for modification should be placed in the project file.

For all surface-disturbing activities occurring within Class 3 or higher units, a stipulation should be included in the permitting document.

Further Information

Detailed information on the geologic units and paleontological resources within a State can often be obtained from State geological surveys, geological or paleontological museums, geology departments at universities or colleges, paleontological permittees or other researchers or within the BLM from Regional Paleontologists or knowledgeable Geologists.

Scientific publications, such as professional journals or State geological survey reports, often contain general and detailed information about paleontological and geological resources relevant to fossil potential and occurrences for specific areas. Current and past paleontological permittee reports usually include precise locality data and maps, and often contain discussions of findings and their significance.

Appendix C

Special Status Species Potentially Occurring in the GHPA

Appendix C Special Status Species Identified for the Cameco Gas Hills EIS

Common Name	Scientific Name	Status[1]	Habitat Association	Potential for Occurrence Within the Project area	Eliminated From Detailed Analysis (Yes/No)	References
Mammals						
Black-footed ferret	*Mustela nigripes*	FE	This species inhabits prairie dog colonies within semi-arid grasslands and mountain basins. Primarily a nocturnal species that is solitary except during the breeding season. The only known populations are in captivity or have been reintroduced. Efforts are being made throughout the Great Plains, western U.S., and Mexico to reintroduce this species into suitable habitats.	None. The USFWS has block-cleared all white-tailed prairie dog colonies within the project area. The nearest re-introduced population is approximately 60 miles southeast of the project area in the Shirley Basin.	Yes. Due to the project area occurring entirely within USFWS block-cleared areas and the large geographic distance to the nearest reintroduced population.	BLM 2007a; Fitzgerald et al. 1994; USFWS 2004.
Long-eared myotis	*Myotis evotis*	BLM	This species occupies coniferous forest. It is most common in ponderosa pine woodlands but also occurs in pinyon-juniper woodlands and subalpine forests.	None. No suitable nesting or foraging habitat occurs within the project area.	Yes. Occurrence would be limited to migrating or dispersing individuals.	BLM 2007a; Fitzgerald et al. 1994; WGFD 2010.
Pygmy rabbit	*Brachylagus idahoensis*	BLM	This species requires dense sagebrush for cover as well as appropriate deep soils for burrowing (i.e., high clay content). Often found in drainages with taller sagebrush present.	Low. Marginal sagebrush habitat occurs in the project area and this species has not been found during recent surveys within the project area.	No.	BLM 2004; HWA 2011; WGFD 2010.
Spotted bat	*Euderma maculatum*	BLM	The spotted bat is known to occur in montane forests, pinyon-juniper woodlands, and open semi-desert shrublands. This species occupies ponderosa pine forests during the breeding season and lower elevations during other times of the year.	High. Breeding habitat does not occur within the project area; however suitable foraging habitat occurs within the project area.	No.	Fitzgerald et al. 1994; WGFD 2010a,b.
Swift fox	*Vulpes velox*	BLM	The swift fox inhabits short-grass and mid-grass prairie and may be associated with prairie dog colonies. Dens typically occur on small hills and ridges.	None. This species is not known to occur within the project area.	Yes. The project area is outside the known distribution of this species in Wyoming.	BLM 2007a; Fitzgerald et al. 1994; WGFD 2010.

Appendix C Special Status Species Identified for the Cameco Gas Hills EIS

Common Name	Scientific Name	Status[1]	Habitat Association	Potential for Occurrence Within the Project area	Eliminated From Detailed Analysis (Yes/No)	References
Townsend's big-eared bat	*Corynorhinus townsendii*	BLM	This species occupies semi-desert shrublands, pinyon-juniper woodlands, and open montane forests. It is frequently associated with caves and abandoned mines but will also utilize abandoned buildings and rock crevices for refuge.	High. Suitable roosting and foraging habitat occurs within the project area.	No.	BLM 2007a; Fitzgerald et al. 1994; WGFD 2010.
White-tailed prairie dog	*Cynomys leucurus*	BLM	Colonies of this species occur primarily in mountain basins, semi-desert grasslands, and open shrublands. This species is typically distributed in relatively large, sparsely populated complexes and live in loosely knit clans.	High. This species occurs within the project area. Surveys in 2009, 2010, and 2011 documented 6 colonies within the project area.	No.	BLM 2007a; Fitzgerald et al. 1994; HWA 2011; WGFD 2010.
Birds						
Bald eagle	*Haliaeetus leucocephalus*	BLM	This species typically occurs near large perennial waterbodies that support suitable roosting and foraging habitat. Nests are commonly built in large cottonwoods or conifers along lakes or rivers. During the winter, this species tends to concentrate in areas with abundant food sources such as wounded waterfowl, carrion, and fish.	None. No suitable nesting or foraging habitat occurs within the project area. This species has not been documented during recent surveys within the project area.	Yes. Occurrence would be limited to migrating or dispersing individuals.	BLM 2007a; Johnsgard 1990; WGFD 2010.
Brewer's sparrow	*Spizella breweri*	BLM	This species typically occurs in basin-prairie and mountain-foothills shrublands, especially sagebrush and woodland chaparral. Nests typically occur in shrubs.	High. This species is known to occupy suitable habitats within the project area and has been documented during recent surveys within the project area.	No.	BLM 2007a; HWA 2011; WGFD 2010.
Burrowing owl	*Athene cunicularia hypugea*	BLM	This species is found in non-riparian habitats including abandoned burrows of prairie dogs, ground squirrels, foxes, and badgers in grassland and open shrubland communities.	High. Suitable habitat for this species (i.e., white-tailed prairie dog colonies) occurs within the project area. However, this species has not been documented during recent surveys in the project area.	No.	BLM 2007a; HWA 2011; Johnsgard 1988; WGFD 2010.

Appendix C Special Status Species Identified for the Cameco Gas Hills EIS

Common Name	Scientific Name	Status[1]	Habitat Association	Potential for Occurrence Within the Project area	Eliminated From Detailed Analysis (Yes/No)	References
Ferruginous hawk	*Buteo regalis*	BLM	This species occurs in open semi-arid habitats including basin-prairie shrubland, mountain-foothills, and badlands. Nest sites include short trees, ledges, and rock outcrops in sagebrush valleys and rolling grassland habitat.	High. While no active nests have been identified within 1-mile of the project area, one active nest occurs outside the 1-mile survey buffer occur near the project area. Suitable nesting and foraging habitat occurs within the project area.	No.	BLM 2007a; HWA 2011; Johnsgard 1990; WGFD 2010.
Greater sage-grouse	*Centrocercus urophasianus*	FC; BLM	This species inhabits sagebrush shrublands and grasslands. Breeding grounds (leks) are generally located in open areas such as broad ridges, grassy areas, and disturbed sites, adjacent to suitable nesting habitat. Most nesting occurs in sagebrush stands with adequate canopy cover and an understory of forbs and grasses. Winter habitat typically consists of south- and east-facing slopes with minimal snow cover.	High. This species is known to occur within suitable sagebrush habitat within the project area. No lek sites are found within the project area but two active leks occur 0.78 and 1.85 miles west of the project area. Suitable nesting and brooding habitat occurs within the project area.	No.	BLM 2007a; Connelly et al. 2004, 2000; HWA 2011; WGFD 2010.
Loggerhead shrike	*Lanius ludovicianus*	BLM	The loggerhead shrike typically inhabits open riparian areas, agricultural areas, grasslands, and shrublands (especially semi-desert shrublands). Nest sites usually occur in isolated trees or large shrubs.	High. This species is known to occupy suitable habitats within the project area and has been documented during recent surveys within the project area.	No.	BLM 2007a; HWA 2011; WGFD 2010.
Long-billed curlew	*Numenius americanus*	BLM	This species typically inhabits grasslands and wet meadows.	None. The project area is not within the know distribution of this species in Wyoming.	Yes. Occurrence would be limited to migrating or dispersing individuals.	BLM 2007a; WGFD 2010.
Mountain plover	*Charadrius montanus*	BLM	This species inhabits flat, short-grass prairie in areas recently burned, overgrazed by livestock, or occupied by prairie dog colonies.	High. This species is a late spring/summer resident within the project area and has been documented within the project area. Approximately 141 acres of potentially suitable habitat occurs within 0.25 mile of the project area,	No.	BLM 2007a; HWA 2011; WGFD 2010; WYNDD 2011.

Appendix C Special Status Species Identified for the Cameco Gas Hills EIS

Common Name	Scientific Name	Status[1]	Habitat Association	Potential for Occurrence Within the Project area	Eliminated From Detailed Analysis (Yes/No)	References
Northern goshawk	*Accipiter gentilis*	BLM	This species occupies mature, close-canopied coniferous and aspen forests. The northern goshawk typically selects open, older-aged class coniferous forests and aspen stands for nesting.	None. Habitats typically associated with this species do not occur within the project area.	Yes. Occurrence would be limited to migrating or dispersing individuals.	BLM 2007a; Johnsgard 1990.
Peregrine falcon	*Falco peregrinus*	BLM	This species typically breeds in foothills and mountain areas. Nest sites are often located on ledges of high, steep-walled cliffs. Preferred foraging habitat includes marshes, lakes, rivers, and wet meadows.	None. Suitable nesting habitat does not occur within the project area.	Yes. Occurrence would be limited to migrating or dispersing individuals.	BLM 2007a; Johnsgard 1990.
Sage sparrow	*Amphispiza belli*	BLM	This species inhabits basin-prairie and mountain-foothills shrublands. Nesting typically occurs in or beneath sagebrush.	High. This species occurs in suitable habitats found within the project area but has not been documented during recent surveys within the project area.	No.	BLM 2007a; HWA 2011; WGFD 2010.
Sage thrasher	*Oreoscoptes montanus*	BLM	This species inhabits basin-prairie and mountain-foothills shrublands. Nesting typically occurs in or beneath sagebrush.	High. This species occurs in suitable habitats found within the project area but has not been documented during recent surveys within the project area.	No.	BLM 2007a; HWA 2011; WGFD 2010.
Trumpeter swan	*Cygnus buccinators*	BLM	This species inhabits lakes, ponds, marshes, and wetlands. Nests often occur on muskrat dens or small islands. Most of the North American population winters in Idaho.	None. This species is not known to nest within the project area.	Yes. Occurrence would be limited to migrating or dispersing individuals.	BLM 2007a; WGFD 2010.
White-faced ibis	*Plegadis chihi*	BLM	The white-faced ibis inhabits marshes, wetlands, wet meadows, and streams. Nesting habitat usually consists of dense vegetated islands surrounded by water >18 inches in depth.	None. This species is not known to nest within the project area.	Yes. Occurrence would be limited to migrating or dispersing individuals.	BLM 2007a; WGFD 2010.
Yellow-billed cuckoo	*Coccyzus americanus*	BLM	This species inhabits lowland deciduous woodlands, willow, and alder thickets, mature cotton-wood-riparian woodlands, deserted farmlands, and orchards. Breeding typically occurs in dense, mature riparian woodlands.	None. Suitable breeding habitat does not occur within the project area.	Yes. Occurrence would be limited to migrating or dispersing individuals.	BLM 2007a; Stokes and Stokes 1996; WGFD 2010.

Appendix C Special Status Species Identified for the Cameco Gas Hills EIS

Common Name	Scientific Name	Status[1]	Habitat Association	Potential for Occurrence Within the Project area	Eliminated From Detailed Analysis (Yes/No)	References
Amphibians						
Boreal Toad	*Bufo boreas boreas*	BLM	Inhabits wet areas in foothills, montane, and subalpine zones from 6,500 to 12,000 feet in elevation.	None. This species range in Wyoming is west of the project area.	Yes. No records of occurrence exist for this species within the project area.	Baxter and Stone 1980; WGFD 2010.
Columbia spotted frog	*Rana luteiventris*	BLM	Found in sub-alpine forests, grasslands, and sagebrush habitats at elevations from 1,700 feet to 6,400 feet.	None. This species range in Wyoming is west of the project area.	Yes. No records of occurrence exist for this species within the project area.	Baxter and Stone 1980; WGFD 2010.
Great Basin spadefoot	*Spea intermontana*	BLM	Prefer sagebrush communities below 6,000 feet in elevation, although they have been found at elevations of 9,200 feet. This species require loose soil to burrow.	High. Suitable habitat occurs within the project area along the drainages and near wetland/riparian habitats.	No.	Baxter and Stone 1980; HWA 2011; WGFD 2010.
Northern leopard frog	*Rana pipiens*	BLM	Typical habitats include wet meadows and the banks and shallows of marshes, ponds, glacial kettle ponds, beaver ponds, lakes, reservoirs, streams, and irrigation ditches. Breeding season is generally May 1 - August 15.	High. Suitable habitat occurs within the project area along the drainages and near wetland/riparian habitats.	No.	Baxter and Stone 1980; BLM 2007a; HWA 2011; WGFD 2010.
Fish						
Yellowstone cutthroat trout	*Oncorhynchus clarkii bouvieri*	BLM	The Yellowstone cutthroat lives in lakes, large rivers, and small tributary streams. Native to the Yellowstone River drainage downstream to the Tongue River, including the Big Horn and Clarks Fork River drainages, this trout is also found in Pacific Creek and other Snake River tributaries.	None. This species range in Wyoming is west of the project area.	Yes. No records of occurrence exist for this species within the project area.	WGFD 2010.
Plants						
Barneby's clover	*Trifolium barnebyi*	BLM	Found on ledges, crevices, and seams, mainly on reddish-cream Nugget Sandstone, secondarily on Frontier Sandstone. Elevation range from 5,500 to 6,780 feet amsl. Flowering May to July.	None. Local endemic, that is known from five extant occurrences in the southeastern foothills of the Wind River and southern Beaver Rim area in Fremont County, Wyoming.	Yes. Based on the limited distribution and geographic range of the species, habitat for the species is not found in the Permit Area.	WYNDD 2011b.

Appendix C Special Status Species Identified for the Cameco Gas Hills EIS

Common Name	Scientific Name	Status[1]	Habitat Association	Potential for Occurrence Within the Project area	Eliminated From Detailed Analysis (Yes/No)	References
Beaver Rim phlox	*Phlox pungens*	BLM	Sparsely vegetated slopes on sandstone, siltstone, or limestone (in the Wind River Basin) and on cays and shales (in the Green River Basin). Elevation range 6,000 to 7,400 feet amsl. Flowering May-June.	High. Patches of suitable habitat for the species was identified in the Permit Area during field surveys conducted by Hayden-Wing.	No.	HWA 2010; WYNDD 2011b.
Blowout penstemon	*Penstemon haydenii*	FE	Substrate of eroding and shifting sand with low vegetation cover, typically found in “blowouts” (i.e., depressions in the topography caused by wind erosion) with less than 10 percent basal ground cover. In Wyoming, blowout penstemon is found primarily on the rim and lee slopes of blowouts, and associated steep slopes deposited at the base of foothills. Elevation range is unknown, but typically found at elevations of 5,860 to 7,440 feet. Flowering mid May to late June.	Low. Known within the Sandhills region of Nebraska and the northeastern Great Divide Basin in Carbon County,	Yes. Based on field surveys conducted by Hayden-Wing, there is no suitable habitat for the species with the Permit Area.	Fritz 1992; WYNDD 2011b; USFWS 1999, Stubbendieck, et al. 1989.
Cedar Rim thistle	*Cirsium aridum*	BLM	Sparsely vegetated openings in Wyoming big sagebrush grasslands on barren chalky hills, gravelly slopes, fans and fine-textured sandy-shaley draws. Typically found on whitish-gray sandstone, chalk, tufaceous colluvium or clay substrates derived from the Split Rock, White River, Wagon Bed, Wind River, Green River, and Wasatch formations. Elevation range 5,800 to 7,500 feet amsl. Flowering June to July.	High. The species has been observed in the vicinity of project area. Suitable habitat for the species was identified in the Permit Area during field surveys conducted by Hayden-Wing.	No.	NatureServe 2010; WYNDD 2011b. HWA 2010.
Desert yellowhead	*Yermo xanthocephalus*	FT	Sparsely vegetated cushion plant communities on low slopes, rims, colluvial fans, and bottoms found in shallow deflation hollows shaped by wind and erosion. Typically found on outcrops of sandstone in the Split Rock Formation. Elevation range 6,720 to 6,760 feet amsl. Flowering June to July.	Low. The species is known from one occurrence in the Sweetwater River Plateau in Fremont County, Wyoming.	Yes. Based on field surveys conducted by Hayden-Wing, suitable habitat for the species is not located within the Permit Area.	HWA 2010; WGFD 2004.

Appendix C Special Status Species Identified for the Cameco Gas Hills EIS

Common Name	Scientific Name	Status[1]	Habitat Association	Potential for Occurrence Within the Project area	Eliminated From Detailed Analysis (Yes/No)	References
Dubois milkvetch	*Astragalus gilviflorus* var. *purpureus*	BLM	Sparsely vegetated cushion plant and bunchgrass communities which may have scattered individuals of Wyoming big sagebrush, mountain big sagebrush, or black sagebrush. Typically found on mid to upper slopes near the crest of badland ridges or low knolls on sandy-clay soils with abundant surface gravel derived from the Tertiary Wind River or Indian Meadows formations, although some populations occur on deposits of the Cretaceous Cody Shale, Triassic Chugwater and Dinwoody formations, Paleozoic limestones, or gravelly moraines. Elevation range 6,400 to 8,800 feet amsl. Flowering late May to early July.	None. Local endemic of the Dubois Badlands in the northwestern Wind River Basin and adjacent foothills of the northeastern Wind River and southern Absaroka ranges in Fremont County, Wyoming.	Yes. Based on the limited distribution and known occurrences of the species, it is unlikely the species would be found in the Permit Area.	WYNDD 2011b.
Fremont's bladderpod	*Lesquerella fremontii*	BLM	Cushion plant communities in meadows, slopes, ridges, and benches on rocky, mesic, limestone derived soils, primarily in arid foothills and desert ridges, but may also occasionally occur in cushion plant communities near timberline. Elevation to 6,800 to 11,100 feet amsl. Flowering May-July.	Low. Local endemic of the east slope of the Wind River Range and Sweetwater Plateau in Fremont County.	Yes. Based on the limited range of the species, it is unlikely the species would be found in the Permit Area.	WYNDD 2011b.
Laramie columbine	*Aquilegia laramiensis*	BLM	Found on shady, level microsites on crevices and ledges in granite boulders, outcrops, ledges, or cliffs within the Laramie Mountains in Albany and Converse counties. Elevation range from 5,400 to 10,100 feet amsl. Flowering June-August.	None. The species range is located south of the Permit Area in Albany and Converse counties.	Yes. Based on the limited distribution and geographic range of the species, suitable habitat for the species is not located in the Permit Area.	BLM 2007a, Marriott and Pokorny 2006.

Appendix C Special Status Species Identified for the Cameco Gas Hills EIS

Common Name	Scientific Name	Status[1]	Habitat Association	Potential for Occurrence Within the Project area	Eliminated From Detailed Analysis (Yes/No)	References
Laramie false sagebrush	*Sphaeromeria simplex*	BLM	In cushion plant communities on rocky limestone soils on gentle slopes or rims of dry, rocky limestone-sandstone "pebble plains" in wind scoured openings. Surrounding vegetation communities typically are densely vegetated forest or shrubland communities. Elevation range 7,200 to 8,760 feet amsl. Flowering May to August.	None. Endemic to southeast Wyoming in the western foothills of the Laramie Range, Shirley Basin, and Shirley Mountains (Albany, Carbon, Converse, and Natrona counties).	Yes. Based on the limited distribution, and elevation range, it is unlikely the species would be found in the Permit Area.	BLM 2007a, NatureServe 2011; WYNDD 2011b.
Limber pine	*Pinus flexilis*	BLM	Dry, rocky sites in forested regions on mesic sites in low density, open area. In Wyoming, it is typically found with Rocky Mountain lodgepole pine, Engelmann spruce, whitebark pine, Rocky Mountain Douglas-fir, subalpine fire, Rocky Mountain juniper, and common juniper. General elevation range 4,000 to 12,500 feet amsl; specific elevation ranges for Wyoming are not available. Buds burst late April to late June, while pine cones ripen from August to September, and seeds are dispersed from September to October	High. Stands of limber pine have been observed in the Permit Area during biological surveys conducted by Hayden-Wing.	No.	Johnson 2001; HWA 2010; NatureServe 2010.
Many-stemmed spider flower	*Cleome multicaulis*	BLM	Whitish, alkali playa wetlands with soils that have a strong scent of hydrogen sulfide. Typically found with alkali cordgrass, saltgrass, Baltic Rush, Nuttall's alkaligrass, Nevada bulrush, and seaside arrowgrass. Elevation range 5,860 feet amsl. Flowering June-August.	None. In Wyoming, populations are restricted to the Sweetwater River Valley in southern Natrona County.	Yes. Based on the limited distribution and known occurrences of the species, it is unlikely the species would be found in the Permit Area.	BLM 2007a
Meadow pussytoes	*Antennaria arcuata*	BLM	Primarily found in subirrigated meadows within broad stream channels. Typically associated species include tufted hairgrass, Baltic rush, Kentucky bluegrass, Sandberg bluegrass on hummocks, level ground or shallow depressions on alkaline, clayey soils high in organic matter. Elevation range 4,950 to 7,900 feet amsl. Flowering July to September.	Low. The species is known from 23 occurrences primarily along broad stream channels in the South Pass area of the southern Wind River Range southwest of the Permit Area.	Yes. While the species is found in Fremont County, suitable habitat for the species is not located in the Permit Area.	BLM 2011b; WYNDD 2011b.

Appendix C Special Status Species Identified for the Cameco Gas Hills EIS

Common Name	Scientific Name	Status[1]	Habitat Association	Potential for Occurrence Within the Project area	Eliminated From Detailed Analysis (Yes/No)	References
Owl Creek Miner's candle	*Cryptantha subcapitata*	BLM	Sparsely vegetated cushion plant communities on sandy-gravelly slopes and desert ridges. Typically found in areas dominated by rock tansy, or black sagebrush. Restricted to sandstones and conglomerates derived from the Eocene Wind River Formation, but has been reported on limestone. Elevation range 4,700 to 6,000 feet amsl. Flowering May-June.	Low. Narrow endemic of the Owl Creek and Bridger Mountains in the vicinity of Boysen Reservoir and the northern Wind River Basin in Fremont County, Wyoming.	Yes. Based on the limited range of the species, it is unlikely the species would be found in the Permit Area.	WYNDD 2011b.
Persistent sepal yellowcress	*Rorippa calycina*	BLM	Moist sandy to muddy banks of streams, stock ponds, and man-made reservoirs near the high water line, high plain swales that evaporate, and along creeks. Elevation range 3,660 to 6,800 feet amsl. Flowering late May to August (extending into October).	Moderate. Suitable habitat for the species was identified in the GHPA during field surveys conducted by Hayden-Wing.	No.	HWA 2010; WYNDD 2011b.
Porter's sagebrush	*Artemisia porteri*	BLM	Sparsely vegetated badlands of ashy or tufaceous mudstones and clay slopes. In the northern Wind River Basin, this species is found in semi-barren, low desert shrub communities dominated by birdfoot sagebrush, Porter's wormwood, or longleaf wormwood, Substrates are dry, whitish, ashyclay hills, gravelly-clay flats, and shaley erosional gullies of the Wind River, Wagon Bed, and Frontier formations. Elevation range 5,300 to 6,500 feet amsl. Flowering June-July.	Low. State endemic restricted to the Wind River Basin and Powder River Basin in Fremont, Johnson, and Natrona counties.	Yes. Based on agency consultation, and elevation range of the species, it is unlikely that the species would be found in the Permit Area.	BLM 2007a; WYNDD 2011b.
Rocky Mountain twinpod	*Physaria saximontana* var. *saximontana*	BLM	Sparsely vegetated slopes on sandy, gravelly soils, or talus of limestone, red sandstone, or clay. Elevation range 5,200 to 8,300 feet. Flowering May to late-June; mature fruits present late-June to August.	High. Suitable habitat for the species was identified in the Permit Area during field surveys conducted by Hayden-Wing.	No.	HWA 2010; WYNDD 2011b.

Appendix C Special Status Species Identified for the Cameco Gas Hills EIS

Common Name	Scientific Name	Status[1]	Habitat Association	Potential for Occurrence Within the Project area	Eliminated From Detailed Analysis (Yes/No)	References
Shoshonea	*Shoshonea pulvinata*	BLM	Shallow, stony, calcareous soils of exposed limestone outcrops, ridge tops, and talus slopes. Associated with other low growing forbs and cushion plants on sites with sparse cover. Elevation range 5,800 to 9,200 feet amsl. Flowering Mid-May to Mid-July.	None. Regional endemic of northwest Wyoming and south-central Montana. In Wyoming, known only from the eastern Absaroka and Owl Creek mountains in Fremont, Hot Springs, and Park counties.	Yes. Based on the limited species range, it is unlikely the species would be found in the Permit Area.	WYNDD 2011b.
Ute's ladies'-tresses orchid	*Spiranthes diluvialis*	FT	An aquatic or wetland-dependent occupying moist to very wet, somewhat alkaline or calcareous native meadows near streams, springs, seeps, lake shores, or in abandoned stream meanders that still retain ample ground water. Typically in Wyoming found on gravel bars, wet meadow terraces, oxbows, seeps; sometimes found in springs, fens, lakes and excavations within suitable settings, including ditches and quarries. In Wyoming, the elevation range is typically from 4,750 to 5,400 feet amsl. Flowering July to August.	Low. In Wyoming, the species occurs at four locations on the Western Great Plains in Converse, Goshen, Laramie, and Niobrara counties.	Yes. Based on field surveys conducted by Hayden-Wing, there is no suitable habitat for the species with the Permit Area.	WYNDD 2011b.
Williams' Wafer parsnip	*Cymopterus williamsii*	BLM	Endemic to limestone habitats in the Bighorn Mountains. Found on open, south or east-facing ridgetops and upper slopes with exposed limestone outcrops or talus on thin, sandy soils. Often restricted to small cracks or pockets in limestone bedrock, Common associates include curl-leaf mountain mahogany and Ponderosa pine. Elevation range 6,000 to 8,300 feet amsl. Flowering May to mid-June.	None. State endemic restricted to the Bighorn Mountains of north-central Wyoming in Bighorn, Johnson, Natrona, and Washakie counties.	Yes. Based on the limited range of the species, it is unlikely the species would be found in the Permit Area.	BLM 2007a; WYNDD 2011b.

[1] FE = Federally listed as endangered.
FT = Federally listed as threatened.
FC = Federal candidate.
FP = Federally proposed.
BLM = BLM Sensitive Species.

Appendix D

Migratory Birds Potentially Occurring in the GHPA

Appendix D Migratory Bird Species on the USFWS Birds of Conservation Concern List and Wyoming Partners in Flight High Priority Bird Species List Potentially Occurring within the Study Area

Common Name	Scientific Name	USFWS Birds of Conservation Concern	Wyoming Partners in Flight High-Priority Bird Species	Primary Breeding Habitat	Secondary Breeding Habitat	Winter Habitat
American bittern	*Botaurus lentiginosus*		X	Wetland	Wet meadow	Migrant
Bald eagle	*Haliaeetus leucocephalus*	X	X	Riparian	Agriculture	Riparian
Burrowing owl	*Speotyto cunicularia*		X	Grassland	Sagebrush shrubland	Migrant
Brewer's sparrow	*Spizella breweri*	X	X	Sagebrush shrubland	Grassland	Migrant
Ferruginous hawk	*Buteo regalis*	X	X	Sagebrush shrubland	Grassland	Grassland
Greater sage-grouse	*Centrocercus urophasianus*		X	Sagebrush shrubland	Grassland	Sagebrush shrubland
Loggerhead shrike	*Lanius ludovicianus*	X		Grassland	Sagebrush shrubland	Migrant
Long-billed curlew	*Numenius americanus*	X	X	Playa	Grassland	Migrant
Mountain plover	*Charadrius montanus*		X	Grassland	Sagebrush shrubland	Migrant
Peregrine falcon	*Falco peregrinus*	X	X	Cliff	Lowland Riparian	Wetland
Sage sparrow	*Amphispiza belli*	X	X	Sagebrush shrubland	Grassland	Migrant
Sage thrasher	*Oreoscoptes montanus*	X		Sagebrush shrubland	Grassland	Migrant
Short-eared owl	*Asio flammeus*		X	Sagebrush shrubland	Grassland	Migrant
Swainson's hawk	*Buteo swainsoni*	X	X	Agriculture	Grassland	Migrant
Upland sandpiper	*Bartramia longicauda*	X	X	Grassland	Grassland	Migrant
Wilson's phalarope	*Phalaropus tricolor*		X	Wetland	Playa	Migrant
Willow flycatcher	*Empidonax traillii*	X		Riparian	Wetland	Migrant

Source: Nicholoff 2003; USFWS 2008.

Appendix E

Air Quality Analysis Support Document for the Gas Hills ISR Uranium Project EIS

Air Quality Analysis Support Document for Gas Hills ISR Uranium Project EIS

List of Acronyms

°F	degrees Fahrenheit
$\mu g/m^3$	micrograms per cubic meter
AQCR	Air Quality Control Region
AQRV	air quality related value
CAA	Clean Air Act
CFR	Code of Federal Register
CH_4	methane
CO	carbon monoxide
CO_2	carbon dioxide
CO_2e	carbon dioxide equivalent
GHG	greenhouse gas
HAP	Hazardous Air Pollutants
IPCC	Intergovernmental Panel on Climate Change
kg/gal	kilograms per gallon
kWh	kilowatt hour
MACT	Maximum Achievable Control Technology
N_2O	nitrous oxide
NAAQS	National Ambient Air Quality Standards
NESHAP	National Emissions Standards for Hazardous Air Pollutants
NH_3	ammonia
NH_4	ammonium
NO_2	nitrogen dioxide
NO_X	Nitrogen oxides
NP	National Park
NPS	National Park Service
NSPS	New Source Performance Standards
NSR	New Source Review
OEL	Occupational Exposure Level
PM	particulate matter
$PM_{2.5}$	particulate matter with an aerodynamic diameter of 2.5 microns or less
PM_{10}	particulate matter with an aerodynamic diameter of 10 microns or less
ppm	parts per million
PSD	Prevention of Significant Deterioration
REL	Reference Exposure Level

RfC	Reference concentrations
SO_2	sulfur dioxide
tpy	tons per year
TSL	toxic screening level
TSP	total suspended particulates
USEPA	United States Environmental Protection Agency
VOC	volatile organic compounds

Contents

1.0 Introduction 1-1

2.0 Analysis Approach 2-1

2.1 Air Quality Regulatory Framework 2-1
2.1.1 National and State Ambient Air Quality Standards 2-1
2.1.2 Prevention of Significant Deterioration 2-2
2.1.3 New Source Performance Standards 2-3
2.1.4 Carbon Dioxide and Other Greenhouse Gases 2-3
2.1.5 National Emission Standards for Air Pollutants 2-3
2.1.6 Conformity for General Federal Actions 2-4
2.1.7 Federal Operating Permits Program 2-4

2.2 Fugitive Dust 2-4
2.2.1 General Construction Activities 2-4
2.2.2 Roadway Fugitive Dust 2-5

2.3 Combustion Emissions and Hazardous Air Pollutants 2-8
2.3.1 Criteria Pollutants 2-8
2.3.2 Hazardous Air Pollutants 2-8
2.3.3 Greenhouse Gases 2-8

2.4 Modeling and Analysis Methods 2-9
2.4.1 SCREEN3 2-9
2.4.2 Class I Visibility Analysis 2-9

3.0 Emissions Inventory 3-1

3.1 Fugitive Dust 3-1

3.2 Combustion Sources 3-2
3.2.1 Combustion Source Emissions 3-2
3.2.2 Hazardous Air Pollutants 3-5

3.3 Greenhouse Gases 3-5

4.0 Air Quality Impacts 4-1

4.1 Fugitive Dust 4-1

4.2 Combustion Impacts 4-2

4.3 Hazardous Air Pollutants 4-4

4.4 Air Quality Related Values (AQRV) 4-4

4.5 Greenhouse Gasses 4-5

5.0 References 5-1

List of Tables

Table 2-1 Applicable Federal and State AAQS 2-1
Table 2-2 Constants for Equations 1a AND 1b 2-6
Table 2-3 Criteria Pollutant Emission Factors 2-8
Table 2-4 HAPs Pollutant Emission Factors 2-8
Table 3-1 Emissions Rate for General Construction Activities 3-1
Table 3-2 Estimated Annual Air Pollutant Emissions from General Construction Activities 3-2
Table 3-3 Emission Factors and Assumptions used to Calculate Fugitive Dust from Roadways 3-2
Table 3-4 Emissions Sources 3-3
Table 3-5 Engine Emissions During Project Activities (tpy) 3-4
Table 3-6 Total Hourly Criteria Pollutant Emissions from Engines for Each Phase (lb/hr) 3-5
Table 3-7 HAP Emissions (tpy) 3-5
Table 3-8 Hazardous Air Pollutant Emissions by Phase (tpy) 3-5
Table 3-9 Greenhouse Gas Production under the Proposed Action 3-6
Table 4-1 SCREEN3 Model Results for Construction Fugitive Dust from Construction 4-2
Table 4-2 SCREEN3 Model Results for Fugitive Dust from Roadway Traffic 4-2
Table 4-3 Estimated Maximum Hourly Air Pollutant Emissions from Project Activities 4-3
Table 4-4 SCREEN3 Model Results for Combustion Emissions from Engines 4-3
Table 4-5 Estimated Annual Air Pollutant Emissions from Project Activities 4-4

1.0 Introduction

AECOM Technical Services, Inc. (AECOM) developed this air quality analysis support document on behalf of the Bureau of Land Management (BLM) to document the methods used in the analysis of air quality impacts resulting from the Gas Hills In-situ Recovery (ISR) Uranium Mine Project (Gas Hills Project or Project) located in Fremont and Natrona counties, Wyoming, proposed by Power Resources, Inc., doing business as Cameco Resources (Cameco).

The purpose of the Project is to explore for and identify ore reserves and extract approximately 1 million to 2.5 million pounds of uranium per year over an anticipated project life of 25 years. The Gas Hills Project would use ISR methods and would be operated as a satellite facility to the Cameco Smith Ranch-Highland uranium ISR facility currently operating in Converse County Wyoming. One existing large building and one new structure would house the site's central processing facilities. The surface disturbance would be limited to the construction of water wells, buried water pipelines, single-lane gravel access roads, power infrastructure, and small buildings for well-head manifold control equipment known as header houses.

The ISR recovery method uses chemical removal of the uranium mineral from the host rock in place, and does not require physically removing and crushing ore-bearing rock. Unlike conventional mining practices, ISR methods do not use large earth-moving equipment or blasting, and require no waste rock or tailings disposal. The ISR methodology utilizes a solution consisting of oxygen and carbon dioxide or bicarbonate which is injected via conventional water wells into uranium ore-bearing rock formations in the subsurface. The solution dissolves the uranium ore from the rock formations into the circulating groundwater and the resultant uranium-bearing groundwater is recovered by pumping wells located adjacent to the injection wells. The groundwater containing uranium is then processed through an ion exchange facility where the uranium is precipitated onto a resin bead media. For this Project, the resin beads containing uranium would then be transported to the Smith Ranch-Highland facility (approximately 140 road miles) for processing into uranium yellowcake. After stripping the uranium from the resin bead media, it would be returned to the Project site for re-use.

The Gas Hills Project Area (GHPA) is defined by the mine permit boundary and covers approximately 8,500 surface acres (approximately 13 square miles). Project activities would occur both within the GHPA and within individual mine units (potential uranium recovery areas). Activities that would occur within the mine units would include the drilling of exploratory boreholes; installation of monitoring wells, injection wells, and production wells; construction of distribution and gathering pipelines and header houses, and construction of roads to the header houses. Activities that would occur within GHPA but outside the mine units would include construction of uranium processing and waste water treatment facilities and development of new and improvement of existing access roads, pipelines, and electrical lines.

Surface disturbance within mine units would not occur all at once but would be phased over several years, depending on the uranium production rate and the availability of construction equipment and personnel. Cameco estimates that of the approximately 1,500 acres that would be disturbed over the 25 year life of the Project. Final surface reclamation would be required by regulatory agencies and assured by bonds. Final reclamation would include plugging and abandoning all wells, removing header houses and buried piping, and re-grading and seeding the disturbed surface.

Air pollutant emissions associated with the construction, operation, reclamation, and decommissioning activities at the Gas Hills Project site includes emissions from fuel combustion and fugitive dust emissions from the following sources:

- Construction equipment and vehicles for site preparation, reclamation, and decommissioning of surface facilities;

- Well-drilling equipment and vehicles for drilling production and monitor wells;
- Natural gas-or propane-fired heating units for the satellite facility;
- Trucks for transporting construction materials as well as the product of the Gas Hills Project (uranium-laden ion exchange resin);
- Trips to disposal sites;
- Truck deliveries and other operational activities; and
- Light-duty vehicles for commuting by construction crew and employees.

Based on preliminary estimates of emissions including construction of new facilities, improvement of some roads, and other production and delineation drilling activities (NRC 2004), the Project could increase emissions of nitrogen oxides (NO_X), carbon monoxide (CO), sulfur dioxide (SO_2), and particulate matter (PM) including PM with an aerodynamic diameter less than 10 micrometers (PM_{10}), and PM with an aerodynamic diameter less than 2.5 micrometers ($PM_{2.5}$).

Air toxics emissions are also considered in the analysis. According to USEPA, modeling of air toxics is generally only warranted for sources that pose the greatest health threat in urban areas, or when the emissions approach levels of 10 tons per year individually or 25 tpy in the aggregate, or is one of the listed NESHAP sources. The emissions of air toxics from the proposed Project would be less than the levels generally required to warrant air toxics modeling.

Ozone is not a primary air pollutant directly that would be emitted by the proposed Project, or by most other air pollution sources. Instead, it is principally created from the chemical reaction of NO_X and volatile organic compounds (VOCs) in the air under direct exposure to sunlight. The project would be a small source of NO_X and VOCs, not at the magnitude that would justify regional ozone modeling. Modeling for ozone formation and transport is a highly complex and resource intensive exercise, and is typically conducted only to guide the choice of strategies to correct a monitored ozone problem in an area not attaining the NAAQS for ozone. The emissions from this project would not be expected to lead to ozone impacts.

The nearest Class I area to the GHPA site is the Bridger National Wilderness Area (NWA), which is about 95 kilometers (km), or 59 miles, from the GHPA. The modeling methods used provide conservative estimates of ambient concentrations that potentially may result from the proposed facility emissions in combination with existing sources in the region. The air quality modeling was conducted in accordance with guidance provided by the United States Environmental Protection Agency (USEPA); Guideline on Air Quality Models (published as 40 Code of Federal Regulations [CFR] 51, Appendix W) (USEPA 2005) (hereafter referred to as the Modeling Guideline).

2.0 Analysis Approach

The Project must demonstrate compliance with the Federal and state regulatory framework as outlined below. The Federal Clean Air Act (CAA) provides states with the authority to regulate air quality within state boundaries. The following subsections provide a summary of the regulatory framework associated with air quality in the Project and vicinity, as well as a description of the modeling and analysis approach for estimating air quality impacts from the Project.

2.1 Air Quality Regulatory Framework

The CAA of 1970 (42 USC 7401 et seq.) as amended in 1977 and 1990 is the basic federal statute governing air pollution. Provisions of the CAA of 1970 that potentially are relevant to the Project are listed below.

- National Ambient Air Quality Standards (NAAQS);
- Prevention of Significant Deterioration (PSD);
- New Source Performance Standards (NSPS);
- Maximum Achievable Control Technology (MACT) Standards;
- Conformity Requirements;
- Greenhouse Gas (GHG) Reporting Rule; and
- Federal Operating Permits Program.

Each of these provisions are discussed in more detail in the following subsections.

2.1.1 National and State Ambient Air Quality Standards

The Federal CAA amendments of the 1990s require all states to control air pollution emission sources so that NAAQS are met and maintained. The CAA directs the USEPA to delegate primary responsibility for air pollution control to state governments. The State of Wyoming adopted the NAAQS as state air quality standards and has added more stringent ambient air quality standards applicable only to Wyoming. In addition to these requirements, the National Park Service (NPS) Organic Act requires the NPS to protect the natural resources of the lands it manages from the adverse effects of air pollution.

The NAAQS establishes maximum acceptable concentrations for NO_2, CO, SO_2, PM_{10}, $PM_{2.5}$, O_3, and lead. Given the extremely low levels of lead emissions anticipated from Project sources, the lead standards are not further addressed in this analysis. These pollutants are known as criteria pollutants. These standards represent the maximum allowable atmospheric concentrations that may occur to protect public health and welfare, and include a reasonable margin of safety to protect the more sensitive individuals in the population. The air quality impacts in the air quality study area must meet the NAAQS, which apply nationwide and the WAAQS. Together these standards are referred to as the AAQS. An area that does not meet the AAQS is designated as a nonattainment area on a pollutant-by-pollutant basis. Applicable national and state AAQS are presented in **Table 2-1**.

Table 2-1 Applicable Federal and State AAQS

Pollutant	Averaging Period	NAAQS
CO	8-hour	9 ppm (10 mg/m^3)

Table 2-1 Applicable Federal and State AAQS

Pollutant	Averaging Period	NAAQS
	1-hour	35 ppm (40 mg/m^3)
NO_2	Annual	0.053 ppm (100 μg/m^3)
	1-hour	0.100 ppm
O_3	1-hour	0.12 ppm
	8-hour	0.075 ppm
$PM_{2.5}$	Annual	15 μg/m^3
	24-hour	35 μg/m^3
PM_{10}	Annual	Revoked
	24-hour	150 μg/m^3
SO_2	3-hour	0.50 ppm
	1-hour	0.075 ppm
Pb	Rolling 3-month	0.15 μg/m^3

2.1.2 Prevention of Significant Deterioration

New or modified large emissions sources in an attainment area are required to follow PSD regulations. PSD regulations restrict the degree of ambient air quality deterioration allowed and apply to proposed new or modified major stationary sources located in an attainment area that have the potential to emit pollutants in excess of predetermined de minimis values (40 CFR Part 51) and the Prevention of Significant Deterioration and Title V Greenhouse Gas Tailoring Rule (Tailoring Rule). As defined in 40 CFR 51 and the Tailoring Rule, a new source is considered a major stationary source if it:

1. Can be classified in one of the 28 named source categories listed in Section 169 of the CAA, and it emits or has the potential to emit 100 tons per year (tpy) or more of any criteria pollutant regulated by the CAA (USEPA 1990);
2. Is any other stationary source that emits or has the potential to emit 250 tpy or more of any criteria pollutants regulated by the CAA (USEPA 1990); or
3. Is any other stationary source constructed that emits or has the potential to emit 100,000 tpy or more of CO_2e.

The Project would be expected be a minor source for all pollutants including CO_2-equivalent (CO_2e); therefore, PSD would not apply to the Project.

Class I areas are protected by Federal Land Managers (FLMs) who manage air quality related values (AQRVs) such as visibility and atmospheric deposition. Though not a regulatory program under PSD, FLMs review the issuance of a PSD permit for any impacts that exceed guideline thresholds for these parameters. In addition to analysis of the visibility and atmospheric deposition, the change in the acid neutralizing capacity (ANC) of sensitive lakes is assessed by FLMs. The FLMs consider a source located greater than 50 km from a Class I area to have negligible impacts with respect to Class I AQRVs if its total SO_2, NO_X, PM_{10}, and H_2SO_4 annual emissions (in tons per year, based on 24-hour maximum allowable emissions), divided by the distance (in km) from the Class I area (Q/D) is 10 or less. The

Agencies would not request any further Class I AQRV impact analyses from such sources. In general, FLAG recommends that an applicant apply the Q/D test (FLAG 2010) for proposed sources greater than 50 km from a Class I area to determine whether or not any further visibility analysis is necessary. Results of the analysis (impacts) are provided in Section 4 of this document.

2.1.3 New Source Performance Standards

The regulation of new sources, through the development of standards applicable to a specific category of sources, was an important step taken by the CAA. NSPS apply to all new, modified, or reconstructed sources within a given category, regardless of geographic location or the existing ambient air quality. The standards define emission limitations that would be applicable to a particular source group. No NSPS are applicable to the Project since the mine would not be one of the listed source groups.

2.1.4 Carbon Dioxide and Other Greenhouse Gases

CO_2 and other GHGs are naturally occurring gases in the atmosphere whose status as a pollutant is not related to their toxicity, but is related to the added long-term impacts they may have on climate because of their increased incremental levels in the earth's atmosphere. Because they are non-toxic and non-hazardous at normal ambient concentrations, CO_2 and other naturally occurring GHGs do not have applicable ambient standards or emission limits under the major environmental regulatory programs.

On October 30, 2009, the USEPA issued the final mandatory reporting rule for major sources of GHG emissions (40 CFR Part 98). The rule requires a wide range of sources and source groups to record and report selected GHG emissions, including CO_2, methane (CH_4), nitrous oxide (N_2O), and some halogenated compounds. The USEPA delayed a comparable rule for GHG emissions for various petroleum and natural gas industry groups.

On June 3, 2010, the USEPA issued the Prevention of Significant Deterioration and Title V Greenhouse Gas Tailoring Rule. The rule tailors the applicability criteria that determine which stationary sources become subject to permitting requirements for GHG emissions under the PSD and Title V programs of the CAA. Under the rule new facilities with GHG emissions of at least 100,000 tons per year (tpy) CO_2e and existing facilities with at least 100,000 tpy CO_2e making changes that would increase GHG emissions by at least 75,000 tpy CO_2e are required to obtain PSD permits. Facilities that must obtain a PSD permit to cover other regulated pollutants must also address GHG emissions increases of 75,000 tpy CO_2e or more. New and existing sources with GHG emissions above 100,000 tpy CO_2e must also obtain operating permits. The USEPA rules do not require any controls or establish any standards related to GHG emissions or impacts.

2.1.5 National Emission Standards for Air Pollutants

The CAA requires USEPA to regulate toxic air pollutants from large industrial facilities and to develop standards for controlling the emissions of air toxics from sources in an industry group (or in source categories). Under the National Emission Standards for Hazardous Air Pollutants (HAPs), the USEPA promulgated standards pursuant to Section 112 of the 1990 CAA Amendments. The rules are provided in 40 CFR 63. The standards for these sources are known as Maximum Achievable Control Technology (MACT) standards, and are based on emissions levels that are already being achieved by the better-controlled and lower-emitting sources in an industry.

USEPA is required to identify categories of industrial sources that emit one or more of the listed 187 toxic air pollutants. These industrial categories include both major and area sources, including those listed below:

- Major sources of air toxics that emit 10 tons per year (tpy) of a single air toxic or 25 tpy of a combination of air toxics.

- Area sources release smaller amounts of toxic pollutants into the air—less than 10 tpy of a single air toxic, or less than 25 tpy of a combination of air toxics. Although emissions from individual area sources are often relatively small, cumulatively their emissions can be of concern (USEPA 2009).
- In the Integrated Urban Air Toxics Strategy, the USEPA identifies the toxic air pollutants that pose a health threat in the largest number of urban areas and regulates sufficient area source categories to ensure that the emissions of these "urban" air toxics are reduced.

The Project is anticipated to be a minor source of HAPs, and there are currently no applicable area source MACT standards that apply to the Project. Emissions of HAPs are discussed in Section 3 of this document.

2.1.6 Conformity for General Federal Actions

According to Section 176I of the CAA (40 CFR 51.853), a federal agency must make a conformity determination in the approval of a project having air emissions that exceed specified thresholds in nonattainment and/or maintenance areas. The Project is not located in a nonattainment or maintenance area; therefore, a general conformity analysis is not required.

2.1.7 Federal Operating Permits Program

All major stationary sources (primarily industrial facilities and large commercial operations) emitting certain air pollutants are required to obtain Title V operating permits under the Federal Operating Permits Program outlined in 40 CFR Part 70 of the CAA. Whether a source meets the definition of "major" depends on the type and amount of air pollutants it emits and, to some degree, on the overall air quality in its vicinity. Generally, major sources include stationary facilities that emit 100 tons or more per year of a regulated air pollutant including compounds such as CO, PM_{10}, $PM_{2.5}$, volatile organics, SO_2, and NO_X. Major sources of toxic air pollutants (i.e., any source that emits more than 10 tpy of an individual toxic air pollutant or more than 25 tpy of any combination of toxic air pollutants) are also covered under the Federal Operating Permits Program. The Project would be a minor source with respect to the Federal Operating Permits Program; therefore, a Title V operating permit would not be required. Results of emissions calculations are shown in Section 3 of this document.

2.2 Fugitive Dust

2.2.1 General Construction Activities

General construction activities were assessed in a very conservative manner by assuming that all construction activities would result in emissions of 1.2 tons per acre of disturbed land per month in accordance with guidance from USEPA as described below.

Heavy construction is a source of dust emissions that may have substantial temporary impact on local air quality. Facility and road construction are two examples of construction activities with high emissions potential. Emissions during the construction of a building or road can be associated with land clearing, drilling and blasting, ground excavation, cut and fill operations (i.e., earth moving), and construction of a particular facility itself. Dust emissions often vary substantially from day to day, depending on the level of activity, the specific operations, and the prevailing meteorological conditions. A large portion of the emissions result from equipment traffic over temporary roads at the construction site.

The temporary nature of construction differentiates it from other fugitive dust sources as to estimation and control of emissions. Construction consists of a series of different operations, each with its own duration and potential for dust generation. In other words, emissions from any single construction site can be expected to 1) to have a definable beginning and an end, and 2) vary substantially over different phases of the construction process. This is in contrast to most other fugitive dust sources, where emissions are either relatively steady or follow a discernible annual cycle. Furthermore, there is often a

need to estimate area wide construction emissions, without regard to the actual plans of any individual construction project. For these reasons, following are methods by which either area wide or site-specific emissions may be estimated.

The quantity of dust emissions from construction operations is proportional to the area of land being worked and to the level of construction activity. By analogy to the parameter dependence observed for other similar fugitive dust sources, one can expect emissions from heavy construction operations to be positively correlated with the silt content of the soil (that is, particles smaller than 75 micrometers [µm] in diameter), as well as with the speed and weight of the average vehicle, and to be negatively correlated with the soil moisture content.

Based on field measurements of total suspended particulate (TSP) concentrations surrounding apartment and shopping center construction projects, the approximate emission factors for construction activity operations are 1.2 tons/acre/month of activity.

These values are most useful for developing estimates of overall emissions from construction scattered throughout a geographical area. The value is most applicable to construction operations with:

1. Medium activity level;
2. Moderate silt contents; and
3. Semiarid climate.

Because the above emission factor is referenced to TSP, use of this factor to estimate PM no greater than 10 µm in aerodynamic diameter (PM_{10}) emissions will result in conservatively high estimates. Also, because derivation of the factor assumes that construction activity occurs 30 days per month, the above estimate is somewhat conservatively high for TSP as well (USEPA 1995).

Screening dispersion modeling was performed to assess potential PM_{10} impacts of fugitive dust from disturbed areas during construction. Fugitive dust emissions from operation and reclamation of the Project would be equivalent to or less than construction emissions; hence, only construction emissions were modeled. Air modeling was performed using the USEPA screening model, SCREEN3, which is a single source Gaussian plume model and provides maximum ground-level concentrations for point, area, flare, and volume sources. SCREEN3 is a screening version of the Industrial Source Complex 3 model (ISC3). The GHPA was modeled as an area source using full meteorology as well as regulatory model default values for mixing heights and anemometer heights. Impacts that would be representative of activities in the analysis area were assessed at a distance of 50 meters from the disturbance. Results of the analysis (impacts) are provided in Chapter 4 of this document.

2.2.2 Roadway Fugitive Dust

To estimate the maximum quantity of dust generated from any single vehicle on unpaved and paved roads, calculations using USEPA methods were used. Results are expressed in pounds (lb) of size-specific particulate emissions from a road per vehicle mile traveled (VMT).

For heavy vehicles traveling on unpaved surfaces at industrial sites including sites such as the Project, emissions were estimated from the following equation:

$$E = k\,(s/12)^a\,(W/3)^b \qquad \text{(Equation 1a)}$$

and, for vehicles traveling on publicly accessible roads, dominated by light duty vehicles, emissions were estimated from the following equation:

$$E = [k\,(s/12)^a\,(S/30)^d]/(M/0.5)^c - C \qquad \text{(Equation 1b)}$$

Where:

k, a, b, c and d are empirical constants (USEPA 2006) given below in **Table 2-2** and

- E = size-specific emission factor (lb/VMT)
- s = surface material silt content (%)
- W = mean vehicle weight (tons)
- M = surface material moisture content (%)
- S = mean vehicle speed (mph)
- C = emission factor for 1980's vehicle fleet exhaust, brake wear and tire wear.

Table 2-2 Constants for Equations 1a AND 1b

	Industrial Roads (Equation 1a)			**Public Roads (Equation 1b)**		
	$PM_{2.5}$	**PM_{10}**	**PM_{30}***	**$PM_{2.5}$**	**PM_{10}**	**PM_{30}***
k (lb/VMT)	0.15	1.5	4.9	0.18	1.8	6.0
a	0.9	0.9	0.7	1	1	1
b	0.45	0.45	0.45	-	-	-
c	-	-	-	0.2	0.2	0.3
d	**-**	**-**	**-**	0.5	0.5	0.3
C (lb/VMT)				0.00036	0.00047	0.00047

Long term average emissions are inversely proportional to the frequency of measurable (> 0.254 mm [0.01 inch]) precipitation, so to account for rainfall a correction term is applied as expressed in the following equation:

$$E_{ext} = E[(365-P)/N] \qquad \text{(Equation 2)}$$

Where:

- E_{ext} = annual size specific emission factor extrapolated for natural mitigation (lb/VMY);
- E = size-specific emission factor (lb/VMT);
- *P* = number of "wet" days with at least 0.254 mm (0.01 in) of precipitation during the averaging period; and
- N = number of days in the averaging period (e.g., 365 for annual, 91 for seasonal, 30 for monthly).

For paved roads, the quantity of particulate emissions from re-suspension of loose material on the road surface due to vehicle travel on a dry paved road was estimated using the following empirical expression:

$$E_p = k\,(sL)^{0.91} \times (W)^{1.02} \qquad \text{(Equation 3)}$$

Where:

- E_p = particulate emission factor (having units matching the units of k);
- k = particle size multiplier for particle size range and units of interest (see below);
- sL = road surface silt loading (grams per square meter) (g/m2); and
- W = average weight (tons) of the vehicles traveling the road.

Applying the precipitation correction term results in the following equation:

$$E_{pc} = [k\ (sL)^{0.91} \times (W)^{1.02}]\ (1 - P/4N) \qquad \text{(Equation 4)}$$

Where k , sL , W, and S are as defined in Equation 3 and:

- E_{pc} = annual or other long-term average emission factor in the same units as k;
- P = number of "wet" days with at least 0.254 mm (0.01 in) of precipitation during the averaging period; and
- N = number of days in the averaging period (e.g., 365 for annual, 91 for seasonal, 30 for monthly).

The assumption leading to Equation 2 is based on analogy with the approach used to develop long-term average unpaved road emission factors; however, Equation 4 above incorporates an additional factor of "4" in the denominator to account for the fact that paved roads dry more quickly than unpaved roads and that the precipitation may not occur over the complete 24-hour day.

Other Assumptions

- Light vehicles such as pickup trucks weigh 2 tons.
- Heavy trucks weigh 10 tons unloaded and 38 tons loaded.
- Speeds on roads are restricted by BMP.

Best Management Practices for Air Quality

- All disturbed mine unit well, pipeline and utility trench acreage would be reclaimed and revegetated as soon as possible after construction has been completed. (PoO/Section 7.8, Cameco 2011).
- Site speed limits of 40 mph on primary roads, 30 mph on secondary roads, and 10 mph on two track roads would be implemented to reduce wildlife/vehicle collisions and generation of dust. (PoO/Section 7.6 and Operations Plan Section 3.1.9 and Plate OP-4, Cameco 2011, 1996).
- Disturbed surfaces would be scarified and contoured, if necessary, followed by topsoil placement and seeding with a BLM-approved seed mix. Areas which have been compacted would be scarified, ripped, and/or disked as necessary to relieve the compaction and prepare the subgrade for topsoil placement (PoO/Section 7.3, Cameco 2011):
  - Topsoil would be placed in a single lift to avoid compaction. On slopes of 4:1 (horizontal to vertical) or steeper, topsoil would be placed along the contour. (PoO/Section 7.3, Cameco 2011).

- All reclaimed areas would remain fenced for a period of at least two years, or until the vegetation is capable of renewing itself with properly managed grazing and without supplemental irrigation or fertilization:
  - The fencing would not be removed until BLM and DEQ agree that the revegetated areas are ready for livestock grazing. (PoO/Section 7.11, Cameco 2011).

Trucks were modeled as volume sources using full meteorology and regulatory model default values for mixing heights and anemometer heights. Impacts were assessed at a distance of 10 meters to 5,000 meters from roads in the analysis area. Results of the analysis (impacts) are provided in Section 4 of this document.

2.3 Combustion Emissions and Hazardous Air Pollutants

2.3.1 Criteria Pollutants

Emissions of criterion pollutants from internal combustion engines were calculated from emissions factors based on engine rated horsepower. Drill rig engines were assumed to have the same horsepower rating as heavy truck engines; therefore, emission rates from both types of engines were assumed to be the same. **Table 2-3** shows the criteria pollutant emission factors used to calculate emissions.

Table 2-3 Criteria Pollutant Emission Factors

Pollutant Emission Factor (lb/hp-hr)					
CO	**NO_x**	**SO_2**	**VOC**	**PM_{10}**	**CO_2**
$6.68x10^{-03}$	$3.10x10^{-02}$	$2.05x10^{-03}$	$2.47x10^{-03}$	$2.20x10^{-03}$	1.15

Conversion factors:
454 g/lb
2,000 lb/ton

2.3.2 Hazardous Air Pollutants

HAPs are those pollutants known or suspected to cause cancer or other serious health effects, such as damage to reproduction, birth defects, or adverse environmental impacts. The USEPA has classified 187 air pollutants as HAPs, including formaldehyde, benzene, toluene, ethylbenzene, and xylenes (BTEX) compounds, and normal hexane (n-hexane).

Emissions of HAPs from internal combustion engines were calculated from emissions factors based on engine rated horsepower. Drill rig engines were assumed to have the same horsepower rating as heavy truck engines; therefore, emission rates of HAPs from both types of engines were assumed to be the same. **Table 2-4** shows the HAPs emission factors used to calculate emissions.

Table 2-4 HAPs Pollutant Emission Factors

Pollutant Emission Factor (lb/hp-hr)					
Benzene	**Toluene**	**Xylenes**	**Aceteldahyde**	**Formaldehyde**	**Propylene**
$6.53x10^{-06}$	$2.86x10^{-06}$	$2x10^{-06}$	$5.37x10^{-06}$	$8.26x10^{-06}$	$1.81x10^{-05}$

2.3.3 Greenhouse Gases

NEPA requires informed, realistic governmental decision making. CEQ provided the most recent draft guidance document in 2010 to advise federal agencies to consider, in scoping their NEPA analyses,

whether analysis of the direct and indirect GHG emissions from their proposed actions may provide meaningful information to decision makers and the public. Specifically, if a proposed action would be reasonably anticipated to cause direct emissions of 25,000 metric tons or more of CO_2e GHG emissions on an annual basis, agencies should consider this an indicator that a quantitative and qualitative assessment may be meaningful to decision makers and the public. For long-term actions that have annual direct emissions of less than 25,000 metric tons of CO_2, CEQ encourages Federal agencies to consider whether the action's long-term emissions should receive similar analysis. CEQ does not propose this as an indicator of a threshold of significant effects, but rather as an indicator of a minimum level of GHG emissions that may warrant some description in the appropriate NEPA analysis for agency actions involving direct emissions of GHGs (CEQ 2010).

The GHG analysis discloses the GHG direct and indirect emissions (power purchased from the grid) of CO_2e and provides a qualitative discussion regarding two distinct viewpoints:

1. The net impact of the Project to climate; and
2. Potential impacts to air quality and other resources due to climate change.

Project GHG emissions are presented in Section 3.3 of this document. GHGs include CO_2, CH_4, N_2O, hydrofluorocarbons (HFCs), perfluorocarbons (PFCs), and sulfurhexaflourides (SF_6).

2.4 Modeling and Analysis Methods

2.4.1 SCREEN3

AECOM used USEPA-approved SCREEN3 for screening level analysis for the Project sources. The capacity and number of equipment and machines, and frequency and duration of operation for each of these emission sources are listed in that table.

Fugitive dust would be generated from construction sites and stockpiles of topsoil, as well as from unpaved road surfaces, especially during dry periods and under windy conditions. The SCREEN3 analysis is intended to produce estimates of regulatory design concentrations without the need for meteorological data and is designed to produce concentrations that are equal to or greater than (e.g., conservative) the estimates produced by AERMOD with a fully developed set of meteorological and terrain data.

For $PM_{2.5}$, AECOM used the recent March 23, 2010 USEPA guidance for $PM_{2.5}$ modeling. In order to demonstrate that it is appropriate to use PM_{10} as a surrogate for $PM_{2.5}$ ambient air quality impact assessment, dispersion modeling analysis demonstrates compliance with the PM_{10} NAAQS, including an analysis of annual PM_{10} impacts. A simple example illustrating when a PM_{10} modeling analysis might serve as a surrogate for $PM_{2.5}$ modeling is to make a clearly conservative assumption that all PM_{10} emissions are $PM_{2.5}$ and the modeled PM_{10} impacts are taken as a direct surrogate for $PM_{2.5}$ impacts and compared to the $PM_{2.5}$ NAAQS (USEPA 2010). This conservative approach (i.e., all PM_{10} emissions are $PM_{2.5}$) is used for combustion sources. For fugitive dust, source specific $PM_{2.5}/PM_{10}$ emission factor ratios also may support the assumption of a more realistic yet conservative approach for taking a ratio of modeled PM_{10} ambient impacts to provide conservative estimates of $PM_{2.5}$ impacts (USEPA 2010).

To estimate the concentration of dust resulting from traffic on unpaved and paved roads, calculations using USEPA SCREEN3 model were used. Results of the analysis (impacts) are provided in Section 4 of this document.

2.4.2 Class I Visibility Analysis

Class I visibility analysis for Bridger NWA was performed using Federal Land Managers' Air Quality Related Values Work Group (FLAG) recommended analyses. The screening analysis is meant to provide a worst-case maximum impact estimate. If the results of the screening analysis show compliance

with existing regulatory requirements, then no further modeling for compliance with standards are required. The screening level analysis involves dividing the emissions from the facility by the distance to the Class I area. If the resultant ratio is below 10, then no further analysis is needed. Results of the analysis (impacts) are provided in Chapter 4.0 of this document.

3.0 Emissions Inventory

Criteria pollutant emissions due to construction, operation, traffic maintenance, and reclamation of the Project would occur from drilling wells, building roads and other Project facilities, hauling product, reclamation of surface disturbance, as well as commuter traffic, and activities along the paved and unpaved roads. Emissions would include exhaust from semi-trucks, maintenance vehicles and equipment, as well as fugitive dust from maintenance activities, wind erosion, and other vehicular traffic. Emissions of GHG would result from fuel combustion. The following sections present the estimated emissions from sources associated with Project activities.

3.1 Fugitive Dust

A generally accepted method of estimating fugitive dust emissions is to use a typical construction project. The average daily fugitive dust emissions for a typical construction project are estimated to be 1.2 tons PM_{10} per acre per month for construction activities (USEPA 1995). Use of this value is a generally accepted approach for impact analysis and is conservative, since Project construction would not involve demolition of existing structures and other activities with the potential to result in high short-term fugitive dust emissions. **Table 3-1** shows emissions rate for general construction activities. For modeling purposes, emissions are converted to grams per second per square meter.

Table 3-1 Emissions Rate for General Construction Activities

Description	Disturbed acres	Duration (mos)	Total PM_{10} (tons)	Uncontrolled (g/s)	Controlled (g/s)	Area Emission Rate (g/s/m^2)
No Action Alternative	26.7	1	32.0	$2.81 \times 10_{-06}$	$1.9642 \times 10_{-06}$	$1.81784 \times 10_{-11}$
Proposed Action Construction	1,341.7	2	3m220.1	$1.41 \times 10_{-04}$	$9.8702 \times 10_{-05}$	$1.81784 \times 10_{-11}$
Proposed Action Operations	260	12	3m744.0	$2.73 \times 10_{-05}$	$1.9127 \times 10_{-05}$	$1.81784 \times 10_{-11}$
No Action Alternative Exploration	5	12	72.0	$5.25 \times 10_{-07}$	$3.6782 \times 10_{-07}$	$1.81784 \times 10_{-11}$

Factors used:

1.2	Tons per acre per month
2000	lbs/ton
454	g/lb
3600	sec/hr
720	hr/mo
50	percent control
4046.825	m^2/acre

Table 3-2 shows annual emissions for general construction activities assuming emissions would occur at a rate of 1.2 tons per acre per month of activity, and **Table 3-3** shows emissions factors and assumptions used to calculate fugitive dust from roadways.

Table 3-2 Estimated Annual Air Pollutant Emissions from General Construction Activities

Annual Emission Rate (tpy)[1]			
Pollutant	**Construction**	**Operations**	**Decommissioning / Reclamation**
PM	9.0	4.5	1.5

[1] Annual emissions (tpy) is based on the potential to emit at the highest hourly rates and assumes 8,760 hours per year.

Table 3-3 Emission Factors and Assumptions used to Calculate Fugitive Dust from Roadways

Silt Content %	Moisture Content %	Control Efficiency %	PM_{10} Emission Factor (lb/VMT) 0.08	$PM_{2.5}$ Emission Factor (lb/VMT) 0.02
5.1	2.4	0.50	0.74	0.07

3.2 Combustion Sources

Facility sources at the GHPA would include stationary as well as mobile sources on the property including drill rigs used to install production, injection, and monitoring wells. Drill rigs also would be used for ore body delineation. Since the Project would be an ISR facility, no crushing would occur at the GHPA.

Emissions inventory includes the sources identified in **Table 3-4** and also includes mobile sources such as light and heavy duty vehicles used for commuting and product transport. Each source category includes the project phase (construction, operation, reclamation) number of units, the schedule of operations and expected duration. The emissions inventory includes criteria pollutants and hazardous air pollutants, estimated using standard emissions factors such as those available in USEPA AP-42 (USEPA 2009). Emissions are used in the SCREEN3 model and in the FLAG screening analysis to determine impacts from the Project.

3.2.1 Combustion Source Emissions

Project emissions for the types of equipment listed in **Table 3-4** are shown in **Table 3-5**. The hourly emission rates for the off-road equipment and machines during various phases of the Gas Hills Project are listed in **Table 3-6**. Hours shown in **Table 3-5** are based in the quantity of each type of equipment as shown in **Table 3-4**.

Combustion source emissions include gaseous pollutants, NO_X, VOC, CO, and SO_2 emissions, associated with the equipment used in construction, operation, reclamation, and decommissioning activities at the Gas Hills Project. Air pollutant emissions due to construction and operation of the Project would occur from drilling wells, hauling product, commuter traffic, and traffic maintenance activities along the paved and unpaved roads.

Table 3-4 Emissions Sources

Period	Stage/Purpose	Equipment Name	Model #/ Capacity	No. of Units	Freq. of Operation	Duration of Operation
Construction	Initial Construction/Well Field Road Construction	Scraper	CAT 651	1	8 hrs/day, 5 days/wk	2 months
		Bulldozer	CAT D9	1	8 hrs/day, 5 days/wk	2 months
		Motor Grader	JD 570B	1	8 hrs/day, 5 days/wk	2 months
	Well Preparation	Truck-mounted Rotary Drilling Rig, Semi-type Diesel Tractor Truck	GD1500	4 - 8	8 hrs/day, 5 days/wk	12 mo/yr
		Pump Pulling Vehicle	1-ton gas or diesel	2	8 hrs/day, 5 days/wk	12 mo/yr
		Motor Grader	JD 570B	1	8 hrs/day, 5 days/wk	3 mo/yr
		Backhoe	JD 710D	3	8 hrs/day, 5 days/wk	12 mo/yr
		Forklift	Case 586D	2	8 hrs/day, 5 days/wk	12 mo/yr
		Cementer	6 Cylinder Gas.	4	8 hrs/day, 5 days/wk	12 mo/yr
		Light-duty Truck		8 - 10	8 hrs/day, 7 days/wk	12 mo/yr
	Const. Material Transport	Heavy-duty Water Truck	1500 gal	4 - 8	8 hrs/day, 7 days/wk	12 mo/yr
	Commuting	Heavy-duty Truck – Material Transport Light-duty Vehicle from Riverton Light-duty Vehicle from Casper	Diesel Pickup/pass. car Pickup/pass.car	1 15 15	1 trip/day 1 trip/day 1 trip/day	2 mo/yr 6 mo/yr 6 mo/yr
Operation	Satellite Facility	Natural Gas- or Propane-fired Heater	0.4-0.5x106 Btu/hr	6	24 hrs/day	6 mo/yr
	Product Transport	Truck to Highland Uranium Project site via Riverton	Diesel Semi-Tractor and Trailer	2	1 trip/day	12 mo/yr
	Commuting	Light-duty Vehicle from Riverton	Pickup/pass.car	15-18	1 trip/day	12 mo/yr
		Light-duty Vehicle from Casper	Pickup/pass.car	10-12	1 trip/day	12 mo/yr

Table 3-4 Emissions Sources

Period	Stage/Purpose	Equipment Name	Model #/ Capacity	No. of Units	Freq. of Operation	Duration of Operation
Decomm./ Reclamation	Reclamation	Scraper	CAT 651	1	2 x 8 hr shift/day*	2 – 3 yrs
		Motor Grader	JD 570B	1	2 x 8 hr shift/day*	2 – 3 yrs
		Backhoe	CAT 245	2	2 x 8 hr shift/day*	2 – 3 yrs
		Heavy-duty Truck	Diesel	3	2 x 8 hr shift/day*	2 – 3 yrs
		Light-duty Truck	Pickup	15	1 trip/day	2 – 3 yrs
	Commuting	Light-duty Vehicle from Riverton	Pickup/pass. car	10	1 trip/day	2 – 3 yrs
		Light-duty Vehicle from Casper	Pickup/pass. car	10	1 trip/day	2 – 3 yrs

Table 3-5 Engine Emissions During Project Activities (tpy)

Equipment	HP	Hours[1]	CO	NO_X	SO_2	VOC	PM_{10}	CO_2
Drill Rigs	350	25,699	$3.00x10^{+01}$	$1.39x10^{+02}$	$9.22x10^{+00}$	$1.11x10^{+01}$	$9.89x10^{+00}$	$5.17x10^{+03}$
Heavy Trucks	350	887.5	$1.04\ x10^{+00}$	$4.81x10^{+00}$	$3.18x10^{-01}$	$3.84x10^{-01}$	$3.42x10^{-01}$	$1.79x10^{+02}$
Pickups	260	1,575	$1.37\ x10^{+00}$	$6.35x10^{+00}$	$4.20x10^{-01}$	$5.06x10^{-01}$	$4.50x10^{-01}$	$2.35x10^{+02}$
Scraper	250	1,000	$8.35\ x10^{-01}$	$3.88x10^{+00}$	$2.56x10^{-01}$	$3.09x10^{-01}$	$2.75x10^{-01}$	$1.44x10^{+02}$
Dozer	300	1,000	$1.00\ x10^{+00}$	$4.65x10^{+00}$	$3.08x10^{-01}$	$3.71x10^{-01}$	$3.30x10^{-01}$	$1.73x10^{+02}$
Grader	300	1,000	$1.00\ x10^{+00}$	$4.65x10^{+00}$	$3.08x10^{-01}$	$3.71x10^{-01}$	$3.30x10^{-01}$	$1.73x10^{+02}$
Pump Pulling Vehicle	260	2,000	$1.74\ x10^{+00}$	$8.06x10^{+00}$	$5.33x10^{-01}$	$6.42x10^{-01}$	$5.72x10^{-01}$	$2.99x10^{+02}$
Backhoe	200	3,000	$2.00x10^{+00}$	$9.30x10^{+00}$	$6.15x10^{-01}$	$7.41x10^{-01}$	$6.60x10^{-01}$	$3.45x10^{+02}$
Forklift	100	2,000	$6.68x10^{-01}$	$3.10x10^{+00}$	$2.05x10^{-01}$	$2.47x10^{-01}$	$2.20x10^{-01}$	$1.15x10^{+02}$
Cementer	100	4,000	$1.34x10^{+00}$	$6.20x10^{+00}$	$4.10x10^{-01}$	$4.94x10^{-01}$	$4.40x10^{-01}$	$2.30x10^{+02}$
Water truck	340	4,000	$4.54x10^{+00}$	$2.11x10^{+01}$	$1.39x10^{+00}$	$1.68x10^{+00}$	$1.50x10^{+00}$	$7.82x10^{+02}$
Total			**$4.56x10^{+01}$**	**$2.11x10^{+02}$**	**$1.40x10^{+01}$**	**$1.69x10^{+01}$**	**$1.50x10^{+01}$**	**$7.85x10^{+03}$**

[1] Hours are based on the type, capacity, and number of equipment and machines shown in **Table 3-4**.

Table 3-6 Total Hourly Criteria Pollutant Emissions from Engines for Each Phase (lb/hr)

Pollutant	Total	Construction	Operation	Reclamation
SO_2	5.8	1.9	2.9	1.0
NO_X	87.1	28.5	43.6	15.1
VOC	6.9	2.3	3.5	1.2
PM_{10}	6.2	2.0	3.1	1.1
CO	18.7	6.1	9.4	3.2
CO_2	3,231.5	1,056.7	1,615.8	559.0

3.2.2 Hazardous Air Pollutants

HAPs are air toxics that pose the greatest threat to human health. HAPs emissions rates for the most common HAPs associated with fuel combustion are based on the following factors shown in **Table 2-4**.

HAP emission rates for each pollutant are below 1 ton per year, and the aggregate levels of all HAPs emissions are also less than 1 tons per year (tpy). **Table 3-7** lists the HAPs emitted from drill rigs, trucks, and pickups and **Table 3-8** shows annual HAPs emissions for each phase of the Project.

Table 3-7 HAP Emissions (tpy)

Equipment	Benzene	Toluene	Xylenes	Aceteldahyde	Formaldehyde	Propylene
Drill Rigs	$2.1x10^{-02}$	$9.2x\ 10^{-03}$	$6.4x\ 10^{-03}$	$1.7x\ 10^{-02}$	$2.7x\ 10^{-02}$	$5.8x\ 10^{-02}$
Heavy Trucks	$8.2x\ 10^{-04}$	$3.6x\ 10^{-04}$	$2.5x\ 10^{-04}$	$6.7x\ 10^{-04}$	$1.0x\ 10^{-03}$	$2.3x\ 10^{-03}$
Pickups	$2.0x\ 10^{-03}$	$8.6x\ 10^{-04}$	$6.0x\ 10^{-04}$	$1.6x\ 10^{-03}$	$2.5x\ 10^{-03}$	$5.4x\ 10^{-03}$

Table 3-8 Hazardous Air Pollutant Emissions by Phase (tpy)

Pollutant	Construction	Operation	Reclamation
Benzene	$1.95x10^{-02}$	$9.77x10^{-03}$	$1.69x10^{-03}$
Toluene	$8.56x10^{-03}$	$4.28x10^{-03}$	$7.41x10^{-04}$
Xylenes	$5.97x10^{-03}$	$2.98x10^{-03}$	$5.16x10^{-04}$
Aceteldahyde	$1.61x10^{-02}$	$8.03x10^{-03}$	$1.39x10^{-03}$
Formaldehyde	$2.47x10^{-02}$	$1.24x10^{-02}$	$2.14x10^{-03}$
Propylene	$5.40x10^{-02}$	$2.70x10^{-02}$	$4.67x10^{-03}$

3.3 Greenhouse Gases

Project GHG emissions were assessed as part of the air quality analysis. GHGs include carbon dioxide (CO_2), methane (CH_4), nitrous oxide (N_2O), hydrofluorocarbons (HFCs), perfluorocarbons (PFCs), and sulfurhexaflourides (SF_6).

Annual emissions of GHGs (CO_2 equivalents, or CO_2e, which include CO_2, methane, and N_2O) from construction and operations sources are directly related to the consumption of fuels (combustion). Purchased power also contributes to GHG emissions at the power plants that furnish power to the grid supplying power to the Project. **Table 3-9** shows the estimated GHG emissions for the Project from direct combustion of fossil fuels, dominated by diesel, but also including natural gas used for process heating and from indirect GHG emissions associated with electrical power consumption.

Table 3-9 Greenhouse Gas Production under the Proposed Action

Case	Diesel Consumption (gallons)	Natural Gas Usage (therms)	Power Consumption (MW-hours/year)	Diesel-related GHG (tpy) CO_2e	Natural Gas-related GHG (tpy) CO_2e	Indirect Power-related GHG (tpy) CO_2e	Total GHG (tpy) CO_2e
Proposed Action[1] (Stationary Sources)	0	546,942	9,746	0	3,014	4,207	7,221
Proposed Action (Mobile Sources)	19,746,935	--	0	219,191	--	0	219,191
Proposed Action Total	**19,746,935**	**546,942**	**9,746**	**219,191**	**3,014**	**4,207**	**226,412**

4.0 Air Quality Impacts

Impacts to air quality were analyzed by determining compliance with the AAQS for all criteria pollutants using SCREEN3. All pollutants were determined to have impacts less than AAQS and are deemed to not cause or contribute to a violation of the AAQS, and as such, no further refined modeling analysis was performed.

The AAQS are the maximum concentrations allowed in terms of total pollutant levels in ambient air. Compliance with the AAQS was based on the total estimated air quality concentrations, which is the sum of the following:

- Modeled impacts resulting from all project sources modeled at their proposed potential emission rates; and
- Background concentrations.

Although southwestern Wyoming experiences high levels of winter-time ozone, the region in the vicinity of the Gas Hills project is not expected to have ozone levels of concern, so ozone modeling was not conducted. The Project is a very minor source of NO_X, VOCs, or other ozone precursors. The Project is expected to be connected to grid-supplied electrical power to operate the injection and pumping wells required for the ISR processes.

4.1 Fugitive Dust

A generally accepted method of estimating fugitive dust emissions is to use a typical construction project. The average daily fugitive dust emissions for a typical construction project are estimated to be 1.2 tons PM_{10} per acre per month for construction activities (USEPA 1985). Use of this value is a generally accepted approach for impact analysis and is conservative, since Project construction would not involve demolition of existing structures and other activities with the potential to result in high short-term fugitive dust emissions.

Each truck was modeled as a volume source. The source of emissions is the truck wheel, but for the purposes of modeling, dimensions of 5.6 meters lateral and 1.5 meter vertical were set. This is a very conservative approach since all of the emissions start in a relatively small volume. The generic road segment used estimated a silt content of 5.1 percent and moisture content of 2.4 percent.

AECOM performed screening level dispersion modeling for each criteria pollutant. Since the screening modeling shows low impacts, well below National Ambient Air Quality Standards (NAAQS) levels, more refined modeling was not deemed necessary to demonstrate compliance with both the NAAQS and Wyoming Ambient Air Quality Standards, collectively referred to as AAQS.

Concentrations of PM_{10} estimated based on the conservative screening level dispersion modeling analysis for the Proposed Action are shown in **Table 4-1** and indicate that impacts due to fugitive dust emissions from roads and disturbed acres during Project construction would represent less than one percent of impacts allowable under National and State (AAQS).

Results of the conservative screening level dispersion modeling analysis for roads during the life of the Project for the Proposed Action are shown in **Table 4-2**, and indicate that the impacts from engines and road traffic would be well within the National and State AAQS.

Table 4-1 SCREEN3 Model Results for Construction Fugitive Dust from Construction

Pollutant	Averaging Time	Impact ($\mu g/m^3$)	Background ($\mu g/m^3$)	Total Impact ($\mu g/m^3$)	National AAQS ($\mu g/m^3$)	Percent of National AAQS
PM_{10}	24-hour	0.8	10.2	11.0	150	7
	Annual	0.2	9	9.2	50	18
$PM_{2.5}$	24-hour	0.2	6.9	7.1	35	20
	Annual	0.1	2.6	2.7	15	17

Table 4-2 SCREEN3 Model Results for Fugitive Dust from Roadway Traffic

Pollutant	Averaging Time	Impact ($\mu g/m^3$)	Background ($\mu g/m^3$)	Total Impact ($\mu g/m^3$)	National AAQS ($\mu g/m^3$)	Percent of National AAQS
PM_{10}	24-hour	39.9	10.2	50.1	150	33.4
	Annual	4.0	9	13.0	50	25.9
$PM_{2.5}$	24-hour	4.0	6.9	10.9	35	31.2
	Annual	0.4	2.6	3.0	15	19.9

Modeling results indicate that these activities would result in impacts that are well within allowable concentrations under National AAQS.

Emissions of $PM_{2.5}$ in fugitive dust were assumed to be a fraction (10 percent) of the emissions of PM_{10}. For internal combustion engines all particulate emissions were assumed to be $PM_{2.5}$.

4.2 Combustion Impacts

Project construction would generate criteria pollutant emissions from fuel combustion during construction, operation, reclamation, and decommissioning activities. The primary pollutants emitted would be PM_{10}, $PM_{2.5}$, oxides of nitrogen (NO_X), CO, and sulfur dioxide (SO_2). These emissions potentially would impact air quality in the GHPA.

Air pollutant emissions due to Project operation would occur from hauling product, commuter traffic, and maintenance traffic activities along the project roads over the lifetime of the Project. Estimated maximum hourly air pollutant emissions from equipment used for project activities are shown in **Table 4-3**. Short term rates are used in the modeling to determine short term hourly and daily impacts.

Screening dispersion modeling using SCREEN3 also was performed to assess combustion emissions from truck and drill rig engines. Engines were modeled as volume sources using full meteorology and default values for mixing heights and anemometer heights. Impacts were assessed at a distance of 10 meters to 5,000 meters from the source in the analysis area.

Table 4-3 Estimated Maximum Hourly Air Pollutant Emissions from Project Activities

Maximum Hourly Emission Rate (lb/hr)			
Pollutant	**Construction**	**Operations**	**Decommissioning / Reclamation**
SO_2	3.5	1.7	0.6
NO_x	52.3	26.1	8.7
VOC	4.2	2.1	0.7
PM	3.7	1.9	0.6
CO	6.1	9.4	3.2

[a] Emission estimates do not include commuter vehicle emissions. Emissions are estimated based on the type, capacity, and number of equipment and machines listed in **Table 3-4**.

[b] Emissions of particulate matter from combustion sources are estimated to be identical for PM_{10} and $PM_{2.5}$.

Results of the conservative screening level dispersion modeling analysis for engines are shown in **Table 4-4**, and indicate that the impacts from engines and road traffic would be well within the National and State AAQS.

Emissions would result in minor, short-term impacts on local air quality that would be restricted to the construction period. The construction impacts would diminish as a result of reclamation activities that would continue for two to three years after construction was completed and disturbed areas were reclaimed. Best management practices would be used to minimize impacts. Vehicular exhaust and crank case emissions from gasoline and diesel drivers would comply with applicable USEPA mobile emission regulations (40 CFR 85).

Table 4-4 SCREEN3 Model Results for Combustion Emissions from Engines

Pollutant	Averaging Time	Impact ($\mu g/m^3$)	Background ($\mu g/m^3$)	Total Impact ($\mu g/m^3$)	National AAQS ($\mu g/m^3$)	Percent of National AAQS
SO_2	1-hour	1.1	NA	1.1	196	0.6
	3-hour	1.1	NA	1.1	700	0.2
SO_2	24-hour	0.5	NA	0.5	365	0.1
	Annual	0.0	NA	0.0	80	0.0
NO_2	1-hour	12.1	NA	12.1	188	6.4
	Annual	0.5	NA	0.5	100	0.5
PM_{10}	24-hr	0.5	10.2	10.7	150	7.1
	annual	0.0	9.0	9.0	50	18.0
$PM_{2.5}$	24-hr	0.1	6.9	7.1	35	20.1
	annual	0.0	2.6	2.6	15	17.2
CO	1-hour	3.5	NA	3.5	40,000	0.0
	8-hour	2.5	NA	2.5	10,000	0.0

4.3 Hazardous Air Pollutants

A discussion of HAPs emissions is included in Section 3.2.2 of this document. The primary sources of HAPs are internal combustion engines used to power construction equipment and vehicles. No HAPs modeling was performed for this project. No single HAP emission rate for the Project is near 10 tpy, nor are the aggregate levels near 25 tpy. Furthermore, mining is not one of the 70 listed NESHAP source categories which identify likely sources of HAPs.

4.4 Air Quality Related Values (AQRV)

Federal land managers responsible for managing Class I areas, such as wilderness areas and national parks, are concerned with potential impacts from nearby activities on air quality related values (AQRVs) such as visibility impairment, ozone effects on vegetation, and effects of pollutant deposition on soils and surface waters. For each of these areas of concern, Federal land managers' air quality guidance recommends that a screening test be applied for proposed sources greater than 50 km from a Class I area to determine whether or not any further analysis is necessary. No Class I areas are located less than 50 km from the GHPA. The screening test considers a source located greater than 50 km from a Class I area to have negligible impacts with respect to Class I AQRVs if its total SO_2, NO_X, PM_{10}, and H_2SO_4 annual emissions (in tons per year, based on 24-hour maximum allowable emissions), divided by the distance (in km) from the Class I area (Q/D) is 10 or less. Based on their guidance, Federal land managers would not request any further Class I AQRV impact analyses from such sources as impacts are anticipated to be negligible (USFS 2010).

The Project would not emit H_2SO_4; project annual emissions of SO_2, NO_X, and PM_{10} are used to derive the potential AQRV impacts as shown in **Table 4-5**. This approach provides a conservative analysis of potential impacts to Class I areas since it includes the pollutants of interest to the FLM, and is calculated using the highest 24-hour emission rates as if those highest emissions occurred every hour of the day for a full year.

Table 4-5 Estimated Annual Air Pollutant Emissions from Project Activities

Annual Emission Rate (tpy)[a]			
Pollutant	**Construction**	**Operations**	**Decommissioning/ Reclamation**
SO_2	8.4	4.2	1.4
NO_x	126.9	63.4	21.1
PM	9.0	4.5	1.5
Total	144.3	72.1	24.0

[a] Annual emissions (tpy) is based on the potential to emit at the highest hourly rates.

Class I AQRV analysis for Bridger NWA was performed using FLAG recommended analyses. The screening analysis is meant to provide a worst-case maximum impact estimate. The results of the screening analysis show compliance with existing regulatory requirements, so no further modeling for compliance with FLM standards is required.

The nearest Class I area is the Bridger Wilderness located about 80 miles (128 km) west of the project area. The Q/D test is calculated based on 144.3 tpy total emissions divided by 95 km resulting in a ratio of 1.1, which is well below 10; therefore, impacts to AQRVs from the Project are anticipated to be negligible and no further AQRV analysis is required.

4.5 Greenhouse Gasses

The scope of climate change is global, and is linked globally to the burning of fossil fuels for electricity, manufacturing, and transportation; deforestation and land surface change; agricultural and livestock operations; and fugitive methane emissions associated with pipelines and coal/oil/natural gas production.

The cumulative effects generally attributed to increased atmospheric greenhouse gas levels include, but are not limited to, melting permafrost, sea level rise, changing global climate patterns, redistribution of plant and animal species, redistribution of disease vectors, and altered precipitation regimes both spatially and temporally. Current state of the science does not have the ability to link any particular instance of greenhouse gas emissions or sequestration to any specific climate-related environmental effects.

5.0 References

Council on Environmental Quality. 2010. Draft NEPA Guidance on Consideration of the Effects of Climate Change and Greenhouse Gas Emissions. February 18, 2010.

Intergovernmental Panel on Climate Change (IPCC). 2007. Climate Change 2007: Synthesis Report – Summary for Policymakers. Cambridge University Press. Cambridge, England, and New York, New York.

_____ Climate Change 2007: Synthesis Report An Assessment of the Intergovernmental Panel on Climate Change IPCC's Fourth Assessment Report (AR4).

Midwest Research Institute. 2006. Background Document for Revisions to Fine Fraction Ratios Used for AP-42 Fugitive Dust Emission Factors. Final report prepared for the Western Governors' Association, Western Regional Air Partnership, MRI Project No. 110397. November 2006.

National Stone, Sand, and Gravel Association (NSSGA). 2007. Modeling Fugitive Dust Sources with AERMOD. Copyright 2007 by NSSGA. January 2007.

Power Resources, Inc. dba Cameco Resources (Cameco). 2011. Revised Plan of Operations Gas Hills Uranium ISR Project. Prepared by Lidstone and Associates, Fort Collins, Colorado. Prepared for Power Resources, Inc., dba Cameco Resources, Cheyenne, Wyoming, March 2011.

Power Resources, Inc. dba Cameco Resources (Cameco). 1996. WSEQ-LQD Permit to Mine Application, Operations and Reclamation Plan, December 1996, as amended (Revised February 1998, October 2009).

United States Environmental Protection Agency (USEPA). 2011a. http://www.epa.gov/ttn/atw/mactfnlalph.html

_____. 2011b. http://www.epa.gov/climatechange/science/recentac.html#ref

_____.2010. MEMORANDUM: Modeling Procedures for Demonstrating Compliance with $PM_{2.5}$ NAAQS Stephen D. Page, Director, Office of Air Quality Planning and Standards.

_____.2009. AERMOD Implementation Guide. Available athttp://www.epa.gov/scram001/7thconf/aermod/aermod_implmtn_guide_19 March 2009.pdf. March 19, 2009.

_____. 2009. AP 42, Fifth Edition. www.epa.gov/ttn/chief/ap42/index.html.

_____. 1995 AP 42, Fifth Edition, Volume I Chapter 13: Miscellaneous Sources

United States Nuclear Regulatory Commission (NRC). 2004. Environmental Assessment for the Operation of the Gas Hills Project Satellite In Situ Leach Uranium Recovery Facility. Docket No. 40-8857. January 2004.

FLAG. 2010.

U.S. Forest Service, National Park Service, and U.S. Fish and Wildlife Service. 2010. Federal land managers' air quality related values work group (FLAG): phase I report—revised (2010). Natural Resource Report NPS/NRPC/NRR—2010/232. National Park Service, Denver, Colorado.

Western Region Climate Center (WRCC). 2012. Period of Record Monthly Climate Summary, Carlsbad FAA Airport (Station ID 291475). Internet website: http://www.wrcc.dri.edu/cgi-bin/cliMAIN.pl?nm1475. Accessed January 5, 2012.

Holzworth. 1972. Mixing Heights, Wind Speeds, and Potential for Urban Air Pollution Throughout the Contiguous United States. USEPA AP-101. Office of Air Programs, Research Triangle Park, North Carolina.

Appendix F

Wyoming Reclamation Policy

United States Department of the Interior

BUREAU OF LAND MANAGEMENT
Wyoming State Office
P.O. Box 1828
Cheyenne, Wyoming 82009-1828

IN REPLY REFER TO:
3042 (921Gamper) P

March 27, 2012

EMS TRANSMISSION: 4/2/2012
Instruction Memorandum No. WY-2012-032
Expires: 9/30/2013

To: District Managers and Deputy State Directors

From: Associate State Director

Subject: Wyoming Bureau of Land Management (BLM) Reclamation Policy

Program Areas: All Surface Disturbing Activities.

Purpose: Implement the Wyoming Reclamation Policy

Policy/Action: In order to ensure a consistent and science-based approach to reclamation, this Instruction Memorandum (IM) identifies ten reclamation requirements (see Attachments) that must be addressed when developing reclamation proposals for all surface disturbing activities. Addressing these ten requirements will help achieve both short and long-term reclamation success for site stabilization and eventual ecosystem reconstruction. The Wyoming Reclamation Policy was previously issued under IM No. WY-2009-022 which expired on September 30, 2010. This IM replaces IM No. WY-2009-022.

Background: Successful reclamation efforts are critical in maintaining an effective multiple-use land management program. Nearly all authorizations for surface disturbing actions are based upon the assumption that an area can and ultimately will be successfully reclaimed. Those seeking approval to conduct surface disturbing activities on Public Lands must include reclamation planning as part of their permit process and the BLM must make this requirement clear early in the permitting process. This IM applies to all BLM authorized actions including those initiated by the BLM.

Timeframe: Effective immediately.

Budget Impact: Savings to Project funds in the long-term.

Manual/Handbook Sections Affected: This IM will be supported with more detailed guidance including new reclamation bond standards and a statewide monitoring and reporting strategy.

Specific reclamation information, sample templates for both reclamation and weed management plans, and other technical guidance is posted on the Wyoming Reclamation web site (http://www.blm.gov/wy/st/en/programs/reclamation.html).

Coordination: The coordination and review of the Wyoming Reclamation Policy has been completed with the WY BLM Reclamation Team: Brenda Neuman, Mining Engineer, WSO; Ken Henke, Natural Resource Specialist, WSO; Adrienne Pilmanis, Botanist, WSO; Travis Bargsten, Physical Scientist, WSO; and Merry Gamper, Physical Scientist, WSO Lead. Other non-Wyoming BLM specialists, WO-310, the Wyoming Governor's Office (for review by all appropriate State Agencies), the University of Wyoming, some local Governments, and numerous interested reclamation professionals in private industry statewide.

Contact: Merry Gamper at 307-775-6272, and by e-mail at MGamper@BLM.gov.

Signed By:	Authenticated By:
Ruth Welch	Sherry Dixon
Associate State Director	Secretary

2 Attachments

1 - Wyoming BLM Reclamation Policy (6 pp)
2 - Wyoming BLM Oil and Gas Reclamation Plan Template (4 pp)

Distribution

Director (200), Rm. 5644, MIB 1	1 (w/o atch)
Director (300), Rm. 5625, MIB 1	1 (w/o atch)
Field Managers	1 (w/atch)
CF	1 (w/atch)

Wyoming Reclamation Policy

The Wyoming Reclamation Policy is guidance for the modification, preparation and/or review of all reclamation plans. It applies to all Federal actions authorized, conducted, or funded by the BLM that disturb vegetation and/or the mineral/soil resources. This policy is intended to be support all BLM program objectives.

A reclamation plan shall be developed for all surface disturbing activities and will become part of the proposed action in the NEPA document. The level of detail for the reclamation plan shall reflect: the complexity of the project, the environmental concerns, the reclamation potential for the site, and the re-vegetation strategy. These plans shall also incorporate any program or regulatory specific requirements for reclamation. The reclamation plan shall address short term stabilization to facilitate long term reclamation. The reclamation plan is considered complete when all the reclamation requirements described below have been addressed, the techniques to meet the reclamation requirements are described in detail, and the BLM concurs with the reclamation plan.

Many landscapes can be reclaimed using established conventional reclamation methods. However, some areas have unique characteristics that make achieving all the reclamation requirements described in this policy unrealistic. Innovative techniques beyond conventional practices must be considered and applied to reclaim these more challenging areas. Areas posing the most extreme reclamation challenges will be identified as having Limited Reclamation Potential (LRP). These areas are often characterized by highly sensitive and/or erosive soils, highly sensitive vegetation types, soils with severe physical or chemical limitations, extremely steep slopes, etc. These LRP areas may require site-specific reclamation measures not specifically addressed in the Wyoming Reclamation Policy. Each Field Office shall develop a unique set of reclamation success requirements for those areas within the framework of the attached Policy. The additional difficulty of reclaiming these LRP areas should be considered in the Resource Management Plan and evaluated when planning surface-disturbing activities. During the NEPA process, alternatives to approving development activities in LRP areas should be carefully analyzed. Alternatives considered should include: avoidance and/or unconventional site specific reclamation requirements. Resource development activities approved in these areas may require additional bonding.

A. RECLAMATION GOALS

1. Short term goal: immediately stabilize disturbed areas and provide conditions necessary to achieve the long term goal.

2. Long term goal: facilitate eventual native plant community and ecosystem reconstruction to maintain a safe and stable landscape and meet the desired outcomes of the land use plan.

B. RECLAMATION REQUIREMENTS

The following Reclamation Requirements apply to all surface disturbing activities, including BLM initiated activities, and must be addressed in each reclamation plan. These requirements also must be met prior to release of the bond and/or the reclamation liability. Where these Reclamation Requirements differ from other applicable Federal laws, rules, and regulations, those requirements supersede this policy. State and/or local statutes or regulations may also apply.

1. **Manage all waste materials:**

   a. Segregate, treat, and/or bio-remediate contaminated soil material.

   b. Bury only authorized waste materials on site. Buried material must be covered with a minimum of three feet of suitable material or meet other program standards.

   c. Ensure all waste materials moved off-site are transported to an authorized disposal facility.

2. **Ensure subsurface integrity, and eliminate sources of ground and surface water contamination.**

   a. Properly plug all drill holes and other subsurface openings (mine shafts, adits etc.).

   b. Stabilize, properly back fill, cap, and/or restrict from entry all open shafts, underground workings, and other openings.

   c. Control sources of contamination and implement best management practices to protect surface and ground water quality.

3. **Re-establish slope stability, surface stability, and desired topographic diversity.**

   a. Reconstruct the landscape to the approximate original contour or consistent with the land use plan.

   b. Maximize geomorphic stability and topographic diversity of the reclaimed topography.

   c. Eliminate highwalls, cut slopes, and/or topographic depressions on site, unless otherwise approved.

   d. Minimize sheet and rill erosion on/or adjacent to the reclaimed area. There shall be no evidence of mass wasting, head cutting, large rills or gullies, down cutting in drainages, or overall slope instability on/or adjacent to the reclaimed area.

4. **Reconstruct and stabilize water courses and drainage features.**

   a. Reconstruct drainage basins and reclaim impoundments to maintain the drainage pattern, profile, and dimension to approximate the natural features found in nearby naturally functioning basins.

   b. Reconstruct and stabilize stream channels, drainages, and impoundments to exhibit similar hydrologic characteristics found in stable naturally functioning systems.

5. **Maintain the biological, chemical, and physical integrity of the topsoil and subsoil** (where appropriate).

   a. Identify, delineate, and segregate all salvaged topsoil and subsoil based on a site specific soil evaluation, including depth, chemical, and physical characteristics.

   b. Protect all stored soil material from erosion, degradation, and contamination.

   c. Incorporate stored soil material into the disturbed landscape.

   d. Soil storage piles to be stored beyond one growing season, should be seeded with appropriate vegetation (native or sterile non-native species).

   e. Identify stockpiles with appropriate signage.

6. **Prepare site for revegetation.**

   a. Redistribute soil materials in a manner similar to the original vertical profile.

   b. Reduce compaction to an appropriate depth (generally below the root zone) prior to redistribution of topsoil, to accommodate desired plant species.

   c. Provide suitable surface and subsurface physical, chemical, and biological properties to support the long term establishment and viability of the desired plant community.

   d. Protect seed and seedling establishment (e.g. erosion control matting, mulching, hydro-seeding, surface roughening, fencing, etc.)

7. **Establish desired self-perpetuating native plant community.**

   a. Establish species composition, diversity, structure, and total ground cover appropriate for the desired plant community.

b. Enhance critical resource values (e.g. wildlife, range, recreation, biodiversity, etc.), where appropriate, by augmenting or accelerating restoration of plant community composition, diversity, and/or structure.

c. Select genetically appropriate and locally adapted native plant materials (e.g. locally sourced or cultivars recommended for seed zone) based on the site characteristics and ecological setting.

d. Use locally sourced and/or collected seeds to the extent possible (local collection and logistics should be included in the Reclamation Plan).

e. Select non-native plants only as an approved short term and non-persistent (i.e. sterile) alternative to native plant materials. Ensure the non-natives will not hybridize, displace, or offer long-term competition to the endemic plants, and are designed to aid in the re-establishment of native plant communities.

8. **Reestablish a complementary visual composition**

a. Ensure the reclaimed landscape features blend into the adjacent area and conform to the land use plan decisions.

b. Ensure the reclaimed landscape does not result in a long term change to the scenic quality of the area.

9. **Manage Invasive Plants**

a. Assess for invasive plants before initiating surface disturbing activities.

b. Develop an invasive plant management plan.

c. Control invasive plants utilizing an integrated pest management approach.

d. Monitor invasive plant treatments.

10. **Develop and implement a reclamation monitoring and reporting strategy.**

a. Conduct compliance and effectiveness monitoring in accordance with a BLM (or other surface management agency) approved monitoring protocol.

b. Evaluate monitoring data for compliance with the reclamation plan.

c. Document and report monitoring data and recommend revised reclamation strategies.

d. Implement revised reclamation strategies as needed.

e. Repeat the process of monitoring, evaluating, documenting/reporting, and implementing, until reclamation goals are achieved.

GLOSSARY

Contamination - The presence of man-made chemicals or other alterations in the natural soil or water environment (pesticides, hazardous substances, petroleum, salts).
Adapted from various sources

Desired Outcome*:* Specific goal/objectives and allowed uses outlined in land use plans. Desired outcomes should be identified for and pertain to resources (such as natural, biological, and cultural), resource uses, (such as energy and livestock grazing), and other factors (such as social and economic conditions).
BLM Handbook H-1601-1

Ecosystem **-** Includes all the organisms of an area, their environment, and the linkages or interactions among all of them; all parts of an ecosystem are interrelated. The fundamental unit in ecology, containing both organisms and abiotic environments, each influencing the properties of the other and both necessary for the maintenance of life.
Vegetation Treatments Using Herbicides in 17 Western States, Programmatic Environmental Impact Statement (BLM 2007)

Federal Action - Approval of specific projects, such as construction or management activities located in a defined geographic area. Projects include actions approved by permit or other regulatory decision as well as federal and federally assisted activities.
National Environmental Policy Act (NEPA) [42 U.S.C. 4321 et seq.]

Invasive Plant **-** A species that is not native (or is alien) to the ecosystem under consideration and whose introduction causes or is likely to cause economic or environmental harm or harm to human health. Plants listed on the State of Wyoming, Designated Noxious Weed List, would be included under this definition.
Executive Order 13112, Invasive Species (1999)

Limited Reclamation Potential (LRP) - Areas possessing unique landscape characteristics (e.g., sensitive geologic formations, extremely limiting soil conditions, biological soil crusts, badlands, rock-outcrops, etc.) often make reclamation success impractical and/or unrealistic due to physical, biological, and/or chemical challenges. When disturbed, these areas may require unconventional reclamation strategies to address the ten requirements established by this Policy.
Adapted from various sources

Locally-sourced native plant materials - seeds, seedlings, transplants, and/or inocula obtained and/or increased from collection at the project location or from nearby similar sites.

Adapted from various sources including the Integrated Vegetation Management Handbook 1740-2, Ch. 8, and Johnson et al 2010 "What Are The Best Seed Sources For Ecosystem Restoration on BLM and USFS Lands?", Native Plants, 11:2:117-131

Reclamation Plan – The Reclamation Plan is a written document that addresses the reconstruction of disturbed ecosystems by returning the land to a stable and productive condition compatible with the land use plan. The Plan must address all ten requirements included in this Policy.
Adapted from various sources

Scenic Quality – The overall impression of a landscape retained after driving or walking through, or flying over an area. The Scenic Quality of an area is rated as Class A (outstanding visual characteristics), Class B (combination of outstanding and common visual characteristics), and Class C (common visual characteristics). See BLM Handbook H-8410 Visual Resource Inventory and BLM Handbook H-8431Visual Resource Contrast Rating.

Soil – A natural, three-dimensional body at the earth's surface. It is capable of supporting plants and has properties resulting from the integrated effect of climate and living matter acting on earthly parent material, as conditioned by relief over periods of time.
Glossary of Soil Science Terms

Subsoil – Technically, the subsoil includes the B horizon. This is roughly, the part of the solum below the organic topsoil and above the rocky parent material of the C horizon. When suitable, the subsoil may be salvaged to supplement the topsoil for plant establishment.
Adapted from various sources

Soil Material – Includes the topsoil and/or the topsoil and a portion of the subsoil salvaged and separated to be used to provide a growth medium for plant establishment.
Adapted from various sources

Surface Disturbing Activities – An action that alters the vegetation, surface/near surface soil resources, and/or surface geologic features, beyond natural site conditions and on a scale that affects other Public Land values. Examples of surface disturbing activities may include: operation of heavy equipment to construct well pads, roads, pits and reservoirs; installation of pipelines and power lines; and the conduct of several types of vegetation treatments (e.g., prescribed fire, etc.). Surface disturbing activities may be either authorized or prohibited.
Wyoming Information Bulletin 2007-029, Guidance for Use of Standardized Surface Use Definitions

Surface Management Agency –Any Federal or State agency having jurisdiction over the surface estate. *Adapted from Onshore Oil and Gas Order No. 1*

Topsoil – The biologically active, upper part of the soil profile, being the most favorable material for plant growth.
Adapted from U.S.D.A., Natural Resources Conservation Service

Waste materials – Any discarded or abandoned material that can interfere with successful reclamation, safety, and long term stability of a site (contaminated soil or water, drilling mud, solid waste). *Adapted from various sources*

Wyoming-BLM Reclamation Policy
Suggested Reclamation Plan Template for Oil and Gas Operations

I. Reclamation – Baseline Information

Site Description
- Climate/Precipitation/Ecological Site Description (ESD)
- Orientation/Aspect
- Existing land use(s)
- Surface and groundwater hydrology
- Topography/Relief

Soils Description
- Soil features
- Soil stripping and stockpiling (length of time and storage configuration)
  - Soil map (optional, but highly recommended on large locations or those exhibiting different micro-communities)
- Viability management
- Soil inhibiting factors
  - Management prescriptions/recommendations

Pre-Disturbance Vegetation Composition
- Photo log with locational information
- Species with density
  - Map (optional, but highly recommended on large locations or those exhibiting different micro-communities)
- Known weed infestations
  - Proposed treatment

II. Reclamation Objectives:

The objective of interim reclamation is to restore vegetative cover and a portion of the landform sufficient to maintain healthy, biologically active topsoil; control erosion; and minimize habitat, visual, and forage loss during the life of the well or facilities.

The long-term objective of final reclamation is to return the land to a condition approximating that which existed prior to disturbance. This includes restoration of the landform and natural vegetative community, hydrologic systems, visual resources, and wildlife habitats. To ensure that the long-term objective will be reached through human and natural processes, actions will be taken to ensure standards are met for site stability, visual quality, hydrological functioning, and vegetative productivity.

III. Reclamation Performance Standards

The following reclamation performance standards will be met:

Interim Reclamation – Includes disturbed areas that may be redisturbed during operations and will be redisturbed at final reclamation to achieve restoration of the original landform and a natural vegetative community.

- Describe “Success” Criteria

Final Reclamation – Includes disturbed areas where the original landform and a natural vegetative community have been restored.

Describe "Success" Criteria

IV. Reclamation Plan Requirements

1) Operator Contact/Responsible Official
   Project Title and Responsible Party
   Include existing leases/wells (for geographic field plan only)

2) Construction Control Actions (actions that will be taken to minimize erosion until Reclamation can begin):
   Stormwater and erosion control
   Slope stabilization
   Topsoil viability management
   Monitoring

3) Management of Invasive, Noxious, and Non-Native Species (Policy Section B9)
   Pre-disturbance presence/Treatment
   Invasive plant management plan
   Monitoring

4) Interim Reclamation
   a) Production-held Surfaces (Policy Sections B1, B2 and B3) (layout diagram)
      Stormwater and Erosion control
      Facility installation
      Housekeeping/Monitoring

   b) Pipelines located on-lease (Policy Sections B2 thru B8)
      Pressure testing and disposal (if applicable)
      Seeding Methods/Mix and Source
      Erosion Control measures
      Risers (location, work areas, safety barricades)

   c) Roads (Policy Sections B2 thru B9)
      Production running surface width
      Drainage/Erosion controls remaining
      Seeding methods/mix

   d) Pit Closure (Policy Sections B1, B2 and B3)
      Known contents
      Length of time pit has been/will be open
      Current pit problems (torn pit liner, non-RCRA materials, etc)
      Closure methodology
      Closure testing plan

Closure sample results submittal

e) Ancillary facilities closure (i.e. water wells, monitor wells, powerlines, fences, etc)

f) Site Preparation (i.e. Recontouring) (Policy Sections B2, B3, B4, B5 and B6)
Equipment
Methods
Suitable soil redistribution
Final recontour layout diagram

f) Establish desired self-perpetuating native plant community (Policy Section B7):
Application of Topsoil & Revegetation:
Seeding:

- Methods
- Schedule
- Seed Mix

Example Seed Mix Table

Species of Seed (Cultivar)	Seed Source (genetic source; distributor)	App. Rate PLS (lbs/ac)
		Total:

g) Visual Resources Mitigation (Policy Section B8)
Actions
Final goal description

h) SME Notification Procedure

i) Reclamation Monitoring (Policy Section B10)
Methods and Reporting
Erosion control

j) Invasive Weeds (Policy Section B9)

k) Additional Measures proposed to enhance “success” (ie irrigation, fertilization, fencing, etc)

5) Final Reclamation Procedures – Additional (Policy Sections B1-B10)

a) Facility Removal

Facilities to be removed
Site assessment clearance (spills, trash)

b) Roads

Road proposed to remain? (two track, fully constructed, none)
Removal of surface materials
Road bed preparation
Seeding methods, timing, and mix

c) Pipeline Decommissioning

Pipeline abandonment procedure
Seeding methods, timing, and mix (if necessary)

d) Ancillary facilities decommissioning (water wells, powerlines, monitoring wells, fences, etc.)

e) Additional Site Prep (pad, road, pipeline)

Source of soil materials (if necessary)
Additional dirt work/Recontouring
Final recontour layout diagram
Final surface drainage
Seeding methods, timing and mix

f) Reclamation Monitoring (pad, road, pipeline)

Methods and reporting
Erosion control

g) Invasive weed management

h) Final abandonment approval timeline

Appendix G

Gas Hills Transportation Plan

Table of Contents

1. **Transportation of Operating Personnel** 2
2. **Drilling Contractors Supporting the Mine Operations** 3
3. **Construction Traffic** 4
4. **Operations Support** 5
5. **Slurry Transport** 6
6. **Resin Transport** 7
7. **Emergency Snow Removal** 8
8. **Crew Shift** 8
9. **Vehicle Storage** 9
10. **Vehicle Traffic Pattern Within Mine Units** 9

The following is a description of the transportation requirements needed for startup, operation, and decommissioning of the Gas Hills in-situ uranium mine to be operated by Cameco Resources, Inc. (Cameco). The plan covers a 25 year mine life expectancy. It is important to note, that the detailed design work has not been completed for the Gas Hills facility at this time. As a result, certain aspects of the design are presently unknown and cannot be detailed.

1. Transportation of Operating Personnel

For operation of the Gas Hills Satellite Facility; technical, operational, and management personnel will be necessary. Cameco anticipates that 80% of the staff will be travelling from the Riverton, Wyoming area while the remaining 20% will travel from the Casper, Wyoming area. The Gas Hills Satellite Facility is estimated to require an average of 46 personnel daily throughout the life of mine.

Transportation to and from the facility will be provided by the employees. Cameco assumes that several vehicle types will be utilized, including cars, sport utility vehicles and/or pickups. The percentage of cars, sport utility vehicles and/or pickups is unknown. The occupancy for each vehicle is estimated to be 1.6 persons per vehicle.

The transportation route to Riverton, Wyoming is:

- Gas Hills Facility to Gas Hills Road (unpaved road) 9 miles
- Gas Hills Road to Riverton, Wyoming (paved road) 46 miles

The transportation route to Casper, Wyoming is:

- Gas Hills Facility to Gas Hills Road (unpaved road) 7 miles
- Gas Hills Road to US 20-26 (unpaved road) 25 miles
- US 20-26 to Casper, Wyoming (paved road) 47 miles

The annual mileage and traffic data for this section is provided on Table 1 below.

Table 1. Transportation of Operations Personnel

Route	Average Employees / Day	Pickup Truck Vehicles / Year	Unpaved Mileage / Round Trip	Paved Mileage / Round Trip	Total Unpaved Mileage	Total Paved Mileage
[1]Riverton, Wyoming to/from Gas Hills Facility	37	8,440	18	92	151,920	776,480
[2]Casper, Wyoming to/from Gas Hills Facility	9	2,053	64	94	131,392	192,982

1 - Assumes that 80% of staff based out of Riverton, Wyoming

2 - Assumes that 20% of staff based in Casper, Wyoming

2. Drilling Contractors Supporting the Mine Operations

The mine operation will require contract drilling support. Cameco anticipates an average of 14 drill rigs annually will be on-site, for the life of the mine. Quarterly maintenance in Riverton, Wyoming is also accounted for in the estimate. The drill rig will be supported by a water truck, a pipe truck, and a transport truck for the drill crew. Occasionally a mechanic's truck may be needed.

It is anticipated that the drilling operations will be supported from the Riverton, Wyoming area. Once on-site, it is estimated that the drill rig and pipe truck will accumulate an average of 5 miles per day on unpaved roadway within the permitted boundary. The water truck will accumulate about 20 miles daily on unpaved roadways within the permitted boundary. Each

drilling rig will have a transport truck which the crew will travel to and from the mine site each day.

The vehicle traffic associated with this section is provided in Table 2 below.

Table 2. Drilling Supporting the Operating Plan

Vehicle Type	Number of Vehicles / Day	Average Annual Unpaved Mileage	Average Annual Paved Mileage
[1]Drill Rig	14	5,255	10,511
[1]Pipe Truck	14	5,255	10,511
[2]Water Truck	14	39,415	10,511
[3]Transport Truck	14	49,925	241,743
Miscellaneous	N/A	2,000	5,000

1 -5 miles per day per vehicle plus additional mileage for quarterly maintenance

2 - 15 miles per day per vehicle plus additional mileage for quarterly maintenance
3 - Each crew traveling from Riverton, Wyoming to the mine site and back to Riverton, Wyoming daily. Additional trips included for unforeseen rig breakdown
Assume on average 16 drilling days per month.

3. Construction Traffic

Initial construction of the mining infrastructure, process buildings, and evaporation ponds will take place beginning in 2013 and will be completed within a year. Additional construction to bring online added throughput capacity will occur in 2018. This construction effort is anticipated to be complete within one year. There will be no 'construction season' for work as construction is anticipated through every month of the year. It is expected that there will be short term deliveries of heavy equipment, concrete, piping, and a pre-fabricated administration building associated (within existing disturbed areas) with initial construction. For the duration of construction, it is anticipated an average daily crew size of 12 people will be transported from Riverton, Wyoming to the facility. This average accounts for peak construction periods anticipated to be on the order of about 40 people (for a short duration), as well as minimum size construction crews (possibly as few as 4 people). The following

table outlines the anticipated traffic during the construction phase of the project for years 2013 and 2018 only.

Table 3. Construction Personnel and Deliveries

Vehicle Type	Number of Vehicles / Day	Average Annual Unpaved Mileage	Average Annual Paved Mileage
[1]Equipment and Product Deliveries	1	6,000	27,600
[2]Transport Truck	4	18,000	110,400

1 -20 miles per day unpaved mileage per delivery. Included concrete trucks; heavy equipment deliveries, pre-fabricated building delivery; piping deliver; and other equipment deliveries.

2 - Each crew traveling from Riverton, Wyoming to facility daily. 46 paved mileage per day for each crew and 15 miles unpaved.

Assumes 300 days per year construction window.

4. Operations Support

Personnel will be required for water sampling, well casing, wellfield services, wellfield construction, maintenance, safety, and geology. Crew travel to the facility is covered under Section 1 of this plan. Once on-site, the crews will travel within the permit boundary with company vehicles to perform necessary tasks. The roadways within the permit boundary are primary and secondary roadways or two-tracks. The Revised Plan of Operations, Section 6.0 '*Description of Operations*' should be referenced for details.

In addition to the above operations support for processing through to resin, the facility will require deliveries of sodium bicarbonate, carbon-dioxide, oxygen, hydrochloric acid and propane. It is estimated to support resin operation that on an annual basis, approximately 50 deliveries of these materials will be needed. To support processing from resin through to slurry, the facility will also require deliveries of sodium carbonate, sodium chloride, caustic soda and sulfuric acid. It is estimated that to support slurry operation, an additional 60 deliveries of materials will be needed. Additionally, a commercial delivery service (FedEx,UPS), on the order of three deliveries per week, will be required to support the

operations as well as waste transportation on the order of one shipment per week. The following table provides annual traffic for the operations supply support personnel and deliveries.

Table 4. Operation Supply Support	
Average Annual Unpaved Mileage (RESIN ONLY)	15,269
Average Annual Paved Mileage (RESIN ONLY)	88,315
Average Annual Unpaved Mileage (SLURRY OPTION – INCLUDES MILEAGE FOR RESIN)	19,109
Average Annual Paved Mileage (SLURRY OPTION – INCLUDES MILEAGE FOR RESIN)	93,955

5. Slurry Transport

Current plans indicate that uranium could be processed at Gas Hills to slurry. Slurry will be trucked from Gas Hills and be delivered to the licensed Highland Resin Transfer System (Highland). Once the slurry is received at the Highland facility, the slurry is dried and packaged for shipping. Empty slurry transport trucks will be returned to the Gas Hills site.

The average annual production for the Gas Hills facility is anticipated to be about 1,100,000 pounds. Based on the average annual production it will require about 122 truckloads per year of slurry to be transported from the Gas Hills facility to Highland.

The transportation route for slurry will be:

- Gas Hills Facility to Gas Hills Road (unpaved road) 7 miles
- Gas Hills Road to US 20-26 (unpaved road) 25 miles
- US 20-26 to Casper, Wyoming (paved road) 47 miles
- Casper, Wyoming to Glenrock, Wyoming (paved road) 27 miles
- Glenrock, Wyoming to JCT HWY 95/93 (paved road) 22 miles
- JCT 95/93 to Highland Loop Road (paved road) 9 miles
- Highland Loop Road to Highland facility (gravel road) 5 miles

The following table provides the annual estimated vehicular traffic and mileage anticipated for this process.

Table 5. Slurry Transport

Annual Round-Trips	Average Unpaved Vehicle Mileage	Paved Vehicle Mileage
122	12,810	25,620

Slurry transport has previously been analyzed by the Nuclear Regulatory Commission. In the event that road passage is impossible with heavy equipment, storage capability will be built into the Carol Shop Satellite facility capable of storing up to 7 days of slurry. Should roads remain impassable by heavy trucks beyond that, road maintenance crews will be contracted to open roads and provide safe passage to the Highland Facility.

6. Resin Transport

Current plans indicate that uranium could be processed at Gas Hills to resin. Resin will be trucked from Gas Hills and delivered to the licensed Highland Resin Transfer System (Highland). Once received at the Highland facility the resin is processed into slurry; dried and packaged for shipping. Empty resin transport trucks will be returned to the Gas Hills site.

The average annual production for the Gas Hills facility is anticipated to be about 1,100,000 pounds. Based on the average annual production it will require about 325 truckloads per year of resin to be transported from the Gas Hills facility to Highland.

The transportation route for resin will be:

- Gas Hills Facility to Gas Hills Road (unpaved road) 7 miles
- Gas Hills Road to US 20-26 (unpaved road) 25 miles
- US 20-26 to Casper, Wyoming (paved road) 47 miles
- Casper, Wyoming to Glenrock, Wyoming (paved road) 27 miles

- Glenrock, Wyoming to JCT HWY 95/93 (paved road) 22 miles
- JCT 95/93 to Highland Loop Road (paved road) 9 miles
- Highland Loop Road to Highland facility (gravel road) 5 miles

The following table provides the annual estimated vehicular traffic and mileage anticipated for this process.

Table 6. Resin Transport

Annual Round-Trips	Average Unpaved Vehicle Mileage	Paved Vehicle Mileage
325	34,125	68,250

Resin transport has previously been analyzed by the Nuclear Regulatory Commission. In the event that road passage is impossible with heavy equipment, storage capability will be built into the Carol Shop Satellite facility capable of storing up to 7 days of resin. Should roads remain impassable by heavy trucks beyond that, road maintenance crews will be contracted to open roads and provide safe passage to the Highland Facility.

7. Emergency Snow Removal

Cameco will be purchasing a motorgrader as part of its mobile equipment fleet. The motorgrader will be used to maintain roads during periods of inclement weather, including removing snow. As previously discussed, the detail design engineering of the facility has not been completed. If there are emergency stores of chemicals or fuels, they will be within the existing disturbance limits of the facility (or potentially within the Carol Shop building itself).

8. Crew Shift

Shift work is currently planned to be on a 7:30 a.m. to 7:30 p.m. basis for operators every day of the week, 52 weeks a year. Professional and support staff will generally be on site Monday thru Friday from 7:30 a.m. to 4:00 p.m.

9. Vehicle Storage

There will be a parking lot at the Carol Shop facility for employee vehicles, company vehicles, and transport trucks. The definitive parking plans has not been developed, however there will be storage areas at the Carol Shop facility for slurry trucks, chemical trucks, delivery trucks, fuel trucks, ect., within existing disturbance limits.

10. Vehicle Traffic Pattern Within Mine Units

Cameco does not intend to build any main access roads to the individual well heads. Traffic to these sites will be minimal and will only incur for periodic maintenance (approximately once every 3 to 6 months). Maintenance to these sites will be performed during dry weather to deter damage (rutting). Cameco has established a plan that all roads and access follow a one way in/one way out policy. Each header house will have one established two-track road for entering and exiting the site.

Appendix H

Visual Contrast Rating Form

Form 8400-4
(September 1985)

UNITED STATES
DEPARTMENT OF THE INTERIOR
BUREAU OF LAND MANAGEMENT

VISUAL CONTRAST RATING WORKSHEET

Date: 12/22/11
District: High Plains
Resource Area: Lander/Casper
Activity (program): In Situ Uranium Mine

SECTION A. PROJECT INFORMATION

1. Project Name: Gas Hills Uranium Project
2. Key Observation Point: Dry Creek Road
3. VRM Class: IV
4. Location
   Township: 32, 33N
   Range: 89, 90W
   Section: Multiple
5. Location Sketch

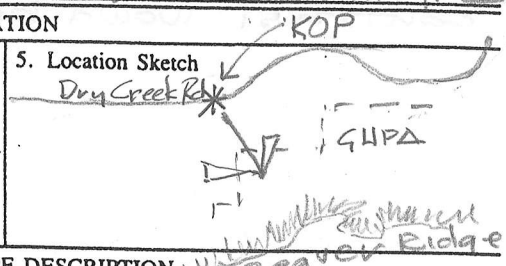

SECTION B. CHARACTERISTIC LANDSCAPE DESCRIPTION

	1. LAND/WATER	2. VEGETATION	3. STRUCTURES
FORM	Flat to gently rolling, rising to rounded, irregular ridge (Beaver Div.)	Complex, irregular patterns of grasses & shrubs	Simple, large, rectangular w/gable roof.
LINE	Relatively simple horizontal, inclined to ridge	Generally diffuse, irregular; limited 2-track bands	Horizontal, curved, linear roads
COLOR	Light gray-beige soils, muted browns on slopes	Bright greens; blue greens, tans & beiges	Cream yellow; gray-beige unpaved roads
TEXTURE	Fine grained, regular	Fine to medium, uneven random	Fine to very fine

SECTION C. PROPOSED ACTIVITY DESCRIPTION

	1. LAND/WATER	2. VEGETATION	3. STRUCTURES
FORM	N.A.	Regular, grass & shrub forms in reclaimed areas	Rectangular & cylindrical
LINE	Simple, horizontal, banded irregular	Butt edged patterns becoming diffuse over time	Horizontal, mostly straight roads, t-lines, strong vertical t-line poles
COLOR	Gray-beige while disturbed	Bright spring greens, blue greens, tans, beiges	Desert tan; gray-beige roads
TEXTURE	Fine while disturbed	Fine to medium, ordered	Medium, even, ordered

SECTION D. CONTRAST RATING ☐ SHORT TERM ☐ LONG TERM

1. DEGREE OF CONTRAST

ELEMENTS	FEATURES: LAND/WATER BODY (1) Strong	Moderate	Weak	None	VEGETATION (2) Strong	Moderate	Weak	None	STRUCTURES (3) Strong	Moderate	Weak	None
Form				X			X				X	
Line			X			X				X		
Color			X				X			X		
Texture			X				X			X		

2. Does project design meet visual resource management objectives? ☒ Yes ☐ No (Explain on reverse side)

3. Additional mitigating measures recommended ☐ Yes ☒ No (Explain on reverse side)

Evaluator's Names: B. Strom
Date: 12/28/11

SECTION D. (Continued)

Comments from item 2.

Well heads, roads, T-lines, etc. would attract attention, but would not dominate views. Line, color & textural contrast would be weak to moderate.

Additional Mitigating Measures (See item 3)