APPENDIX S
FRAMEWORK SPILL PREVENTION AND RESPONSE PLAN

TABLE OF CONTENTS

S1.0 INTRODUCTION 1

S2.0 PLAN PURPOSE 1

S3.0 PLAN UPDATES 1

S4.0 RESPONSIBILITY OF PLAN IMPLEMENTATION 1

S5.0 GENERAL PETROLEUM PRODUCTS, QUANTITIES, AND STORAGE 1

S6.0 SPILL PREVENTION MEASURES 2

S6.1 OIL TRANSFER OPERATIONS 2
S6.1.1 Hydraulic and Lubricating Oils 2
S6.1.2 Diesel Fuel and Gasoline 2
S6.2 SECONDARY CONTAINMENT AND/OR DIVERSIONARY STRUCTURES 3
S6.3 INSPECTIONS AND PERSONNEL TRAINING 3
S6.3.1 Inspections 3
S6.3.2 Personnel Training 4

S7.0 SPILL CONTROL AND COUNTERMEASURES 4

S8.0 AGENCY NOTIFICATION 5

S8.1 EMERGENCY CONTACTS 5

S9.0 ENVIRONMENTAL PROTECTION 6

TABLES:

TABLE S1 FEDERAL AND STATE EMERGENCY CONTACTS 5

APPENDICES:

ATTACHMENT A TYPICAL SPILL CONTAINMENT MEASURES 7

ACRONYMS

Applicant	TransWest Express LLC, also TransWest
BLM	Bureau of Land Management
BMP	Best Management Practice
CFR	Code of Federal Regulations
CSU	Controlled Surface Use
DEIS	Draft Environmental Impact Statement
EMM	Environmental Mitigation Measure
EPA	United States Environmental Protection Agency
FEIS	Final Environmental Impact Statement
NSU	No Surface Use
NTP	Notice to Proceed
Plan	Spill Prevention and Response Plan
POD	Plan of Development
Project	TransWest Express Transmission Project, also TWE Project
ROD	Record of Decision
ROW	right-of-way
SPCC Plan	Spill Prevention, Control, and Countermeasure Plan
TransWest	TransWest Express LLC, also Applicant
TWE Project	TransWest Express Transmission Project, also Project
USDOT	United States Department of Transportation
USFS	United States Forest Service
WWEC	West-wide Energy Corridor

S1.0 INTRODUCTION

This framework Spill Prevention and Response Plan (Plan) identifies the specific stipulations and methods that TransWest Express LLC (TransWest or Applicant) and its Construction Contractor(s) will follow to address spill prevention, response, and cleanup for the TransWest Express Transmission Project (TWE Project or Project). In conjunction with this framework Plan, TransWest developed a framework Hazardous Materials Management Plan (Appendix L), which identifies specific measures that TransWest and its Construction Contractor(s) will take to reduce the risks associated with the use, storage, transportation, and disposal of hazardous materials.

S2.0 PLAN PURPOSE

The purpose of this Plan is to prevent hazardous material spills from Project facilities entering into water bodies. The Construction Contractor(s) shall use the following framework to develop the Spill Prevention and Response Plan, which differs from a Spill Prevention, Control, and Countermeasure (SPCC) Plan which is required for facilities that store more than 1,320 gallons of oil. For Project facilities that store more than 1,320 gallons of oil in containers with shell capacities of 55 gallons or greater, a SPCC Plan will be developed in accordance with Title 40 Code of Federal Regulations (CFR) Part 112.

The following framework describes measures that the Construction Contractor(s) shall use to prevent, respond to, and control spills of hazardous materials, as well as measures to minimize a spill's effect on the environment.

S3.0 PLAN UPDATES

This Plan will be updated for the Record of Decision (ROD) Plan of Development (POD) and will include relevant mitigation measures to ensure regulation compliance and safety. The Plan for the Notice to Proceed (NTP) POD will include updates as needed based on the final design and engineering and a complete and up-to-date emergency contact list. The Construction Contractor(s) will be responsible for preparing and implementing the final Plan in compliance with local, state, and federal regulations pertaining to spill prevention and response.

S4.0 RESPONSIBILITY OF PLAN IMPLEMENTATION

TransWest, through its Construction Contractor(s) and inspectors, shall be responsible for implementing the Plan. The Construction Contractor(s) shall comply with applicable federal, state, and local regulations for using, storing, and disposing of hazardous materials, as well as for oil transfer operations.

S5.0 GENERAL PETROLEUM PRODUCTS, QUANTITIES, AND STORAGE

During construction activities, the Construction Contractor(s) would use various petroleum products. Typical fuels used for the Project include diesel fuel and gasoline. Typical lubricants for the Project include engine oil, transmission/drive train oil, hydraulic oil, gear oil, and general lubricating grease. Typical coolants include glycols such as anti-freeze.

The quantity of fuel storage will vary generally from 500 to 1,000 gallons in aboveground storage tanks at designated construction yards. The aboveground storage tanks will be equipped with secondary containment sized to contain the largest volume of fuel and provide sufficient freeboard. Fuel trucks will be used to transport large quantities of fuel. Smaller quantities of fuel, five to 100

gallons, may sometimes be stored temporarily in the construction area along the right-of-way (ROW). Pickup trucks will be used to transport these smaller quantities of fuel.

Lubricants and coolants will be stored in bulk or retail packaging at contractor yards in quantities typically less than 500 gallons and transported in trucks to the construction area as needed.

S6.0 SPILL PREVENTION MEASURES

The following describes various spill prevention measures that the Construction Contractor(s) shall implement to reduce the potential for a spill to occur in accordance with Applicant Committed Environmental Mitigation Measure (EMM) TWE-57. The measures include conducting oil transfer operations in accordance with applicable oil pollution prevention and safety requirements, and conducting periodic inspections and personnel training.

S6.1 Oil Transfer Operations

S6.1.1 Hydraulic and Lubricating Oils

The hydraulic and lubricating oils in construction vehicles are typically replenished or replaced on an infrequent basis. It is expected that the hydraulic and lubricating oils would be handled using containers, each of which would have a shell capacity of less than 55 gallons.

S6.1.2 Diesel Fuel and Gasoline

It is expected that vendors would use tank trucks to deliver diesel fuel and gasoline to aboveground storage tanks, where construction vehicles would refuel. When tank truck loading/unloading operations occur, Construction Contractor personnel shall ensure that procedures at the site meet the minimum requirements and regulations established by the U.S. Department of Transportation (USDOT). Fuel transfer operations shall occur through aboveground unloading hoses, which shall be supported and designed to minimize abrasion during transfer operations. To prevent vehicles from departing before disconnection of the transfer hose, spill prevention techniques provide for:

- The setting up of barriers or warning signs to prevent a truck from leaving before the completion of unloading.
- Placing wheel chocks on truck tires to prevent vehicle movement during unloading.
- Closely inspecting the lowermost drain and all outlets for discharges.
- Ensuring truck drains/outlets are tightened, adjusted, or replaced as needed.

The Construction Contractor(s) shall take the following measures to prevent spills prior to, during, and after unloading:

- **Prior to unloading:** Fuel levels shall be verified, connections rechecked, and hoses examined for integrity. Signs shall be posted warning all vehicular traffic operating in the transfer area to use caution.
- **During unloading:** Only trained personnel authorized to conduct the transfer shall be utilized. The transfer and pumping system shall be continually monitored for leaks and the fuel level in the receiving container shall be frequently monitored to prevent overfilling.

- **After unloading:** The transfer hose shall be properly drained and disconnected, and all tank truck drains and connections shall be checked for proper closure prior to departure.

Vehicle refueling and servicing activities will be performed in designated construction zones located more than 100 feet from wetlands and intermittent streams and more than 500 feet from perennial steams in accordance with Applicant Committed EMM TWE-24. If unique conditions require refueling within 100 feet of a water body, wetland, or within designated municipal watersheds, a determination of necessary emergency response actions shall be conducted prior to refueling activities. Additionally, absorbent materials or other spill containment materials shall be available for immediate application prior to commencing refueling activities. Fuel trucks transporting fuel to on-site equipment shall travel only on approved access roads.

Each construction crew shall have readily available and sufficient supplies of absorbent, barrier materials and USDOT-approved containers to allow for rapid containment and recovery of any spill of hazardous material.

S6.2 Secondary Containment and/or Diversionary Structures

All hazardous materials containing equipment that has the potential to discharge to water bodies shall be equipped with secondary containment or other appropriate prevention measures. The Construction Contractor(s) shall develop oil transfer/unloading procedures (section S6.1) and have spill response materials available that can be used to immediately respond to a discharge, should an incident occur..

S6.3 Inspections and Personnel Training

S6.3.1 Inspections

The Construction Contractor(s) shall conduct weekly inspections of oil-containing equipment and facilities. These inspections shall include the items below, as applicable, and be recorded either with paper inspection forms or electronically:

- Container foundation
- Container shell condition
- Tank level control
- Piping condition
- Piping supports
- Piping flange or expansion joints
- Piping valve glands and bodies
- Locking of valves
- Oil levels
- Oil gauges
- Oil leaks of any type
- Stains and accumulated free product on the ground

S6.3.2 Personnel Training

The Construction Contractor's personnel shall receive hazardous material awareness training in accordance with Applicant Committed EMM TWE-57. More specifically, prior to the start of construction activities, the Construction Contractor(s) shall train hazardous material-handling personnel on methods to prevent, control, and respond to a hazardous material spill. Newly hired personnel who work in facilities where hazardous materials are stored shall be informed of storage locations and the emergency plan procedure in the event of an accidental spill. New personnel who work with hazardous materials shall be trained in the proper management of those materials under normal operating circumstances and under emergency circumstances. Hazardous material-handling personnel shall be trained on the following topics:

- Operation and maintenance of equipment to prevent discharges
- Applicable state and federal laws, rules, and regulations
- Spill reporting procedures
- Spill containment and recovery procedures
- Storage of waste materials
- Safety and health considerations
- General facility operations
- Contents of the Spill Prevention and Response Plan

S7.0 SPILL CONTROL AND COUNTERMEASURES

Should a spill occur, the Applicant and its Construction Contractor(s) shall commit the manpower, equipment, and materials necessary to respond to and control a hazardous material spill in accordance with Applicant Committed EMM TWE-57. Prior to construction, the Construction Contractor(s) shall submit an emergency preparedness and response plan. The plan shall comply with all applicable federal, state, and local regulations. The plan shall describe emergency response operations, including but not limited to, spill control, cleanup, notification, characterization, and disposal procedures. All contractor supervisors and personnel handling hazardous substances shall be familiar with these procedures.

As part of the emergency preparedness and response plan, the Construction Contractor(s) shall establish procedures and individual responsibilities regarding spill discovery, response, clean-up, and disposal. Prior to beginning construction, the Construction Contractor(s) shall be required to submit a list of spill response contractors and commercial disposal facilities to TransWest for approval. Per West-wide Energy Corridor (WWEC) Best Management Practice (BMP) PHS-15 in the Draft Environmental Impact Statement (DEIS), hazardous material spills shall be removed and the affected area(s) cleaned to meet applicable standards. Per the Bureau of Land Management (BLM) Richfield Field Office's No Surface Use (NSU) and Controlled Surface Use (CSU) restrictions for the Utah prairie dog, inadvertent spills of petroleum-based or other toxic materials shall be removed and the affected area(s) cleaned immediately.

The emergency preparedness and response plan will describe measures to respond to and control hazardous material spills. Following a spill, all reasonable efforts shall be made to immediately control the source of the discharge and contain the spill. Absorbent materials shall be deployed with efforts directed to limiting the area of contamination. All reasonable efforts shall be made to prevent any spill from reaching wetlands or waterbodies. If a spill should reach surface waters, straw bales, booms, and absorbent materials shall be immediately deployed to contain and reduce downstream migration of the spilled material. Once a spill is contained, cleanup activities shall begin immediately. All spilled material, contaminated soil, and absorbent material shall be picked up and contained for disposal. In the event of a large spill or a spill that migrates into surface waters, the spill response contractors will be called to assist in cleanup efforts. Attachment A includes a list of typical spill containment measures

S8.0 AGENCY NOTIFICATION

S8.1 Emergency Contacts

Any spill of any material in such quantity as may, with reasonable probability, injure or be detrimental to human health, animal, plant life, property, or may unreasonably interfere with the public welfare or the use of property will be reported. This includes chemical, biohazardous, petroleum-product, and sewage spills and incidents. In addition to recent spills, the discovery of evidence of previous unauthorized discharges, such as contaminated soil or groundwater, also must be reported. As soon as possible after beginning spill control and cleanup activities, the Construction Contractor(s) shall notify TransWest, who will determine if the spill is reportable. TransWest will notify the appropriate authorities of any reportable spills.

In accordance with Applicant Committed EMM TWE-57, Table S1 lists the federal and state contacts that the Construction Contractor(s) shall notify in the event of a reportable hazardous material spill from a Project facility or construction site. The agencies listed are based on the jurisdictions crossed by the Agency Preferred and Applicant Proposed Alternatives in the Final Environmental Impact Statement (FEIS). In accordance with WWEC BMP PHS-13 in the DEIS, the Construction Contractor(s) shall document the spill and provide the documentation to the land management agency's authorized officer. The Construction Contractor(s) shall also note the cause of the spill and note corrective measures taken to prevent another spill from occurring.

TABLE S1 FEDERAL AND STATE EMERGENCY CONTACTS

AGENCY TO BE CONTACTED	CONTACT NAME	PHONE/ADDRESS
Federal		
EPA Region 8 Emergency Response Center	TBD	303.312.6312
EPA Region 9 Emergency Response Center	TBD	415.947.8000
BLM, Rawlins Field Office	TBD	307.328.4200
BLM, Little Snake Field Office	TBD	970.826.5000
BLM, White River Field Office	TBD	970.878.3800
BLM, Vernal Field Office	TBD	435.781.4400
BLM, Price Field Office	TBD	435.636.3600
BLM, Salt Lake Field Office	TBD	801.977.4300
BLM, Richfield Field Office	TBD	435.896.1500

AGENCY TO BE CONTACTED	CONTACT NAME	PHONE/ADDRESS
BLM, Fillmore Field Office	TBD	435.743.3100
BLM, Cedar City Field Office	TBD	435.865.3000
BLM, St. George Field Office	TBD	435.688.3200
BLM, Ely District Office	TBD	775.289.1800
BLM, Las Vegas Field Office	TBD	702.515.5000
USFS, Ashley National Forest	TBD	435.789.1181
USFS, Uinta National Forest	TBD	801.999.2103
USFS, Manti-La Sal National Forest	TBD	435.637.2817
USFS, Dixie National Forest	TBD	435.865.3700
State		
Wyoming Department of Environmental Quality	TBD	307.777.7781
Colorado Department of Public Health and Environment	TBD	877.518.5608
Utah Department of Environmental Quality	TBD	801.536.4123
Nevada Division of Environment al Protection	TBD	888.331.6337

EPA = United States Environmental Protection Agency; BLM = Bureau of Land Management; USFS = United States Forest Service

S9.0 ENVIRONMENTAL PROTECTION

EMMs shall be applied Project-wide and shall address the concerns associated with spills. These measures are subject to change and will be finalized after discussions with agencies and as the Project progresses.

ATTACHMENT A
TYPICAL SPILL CONTAINMENT MEASURES

Interceptor Trenching/French Drainage

Remove yard rock from the downslope side of the spill (Figure 14). Excavate an interceptor trench and line it with polyethylene. Use vacuum trucks to pump oil product from the collection depression, or portable skimmers in conjunction with storage containers (drums, dracons, tank trucks). Sorbent matting can be used if eduction and/or skimming equipment is operationally unavailable or oily product in the collection depression is minimal.

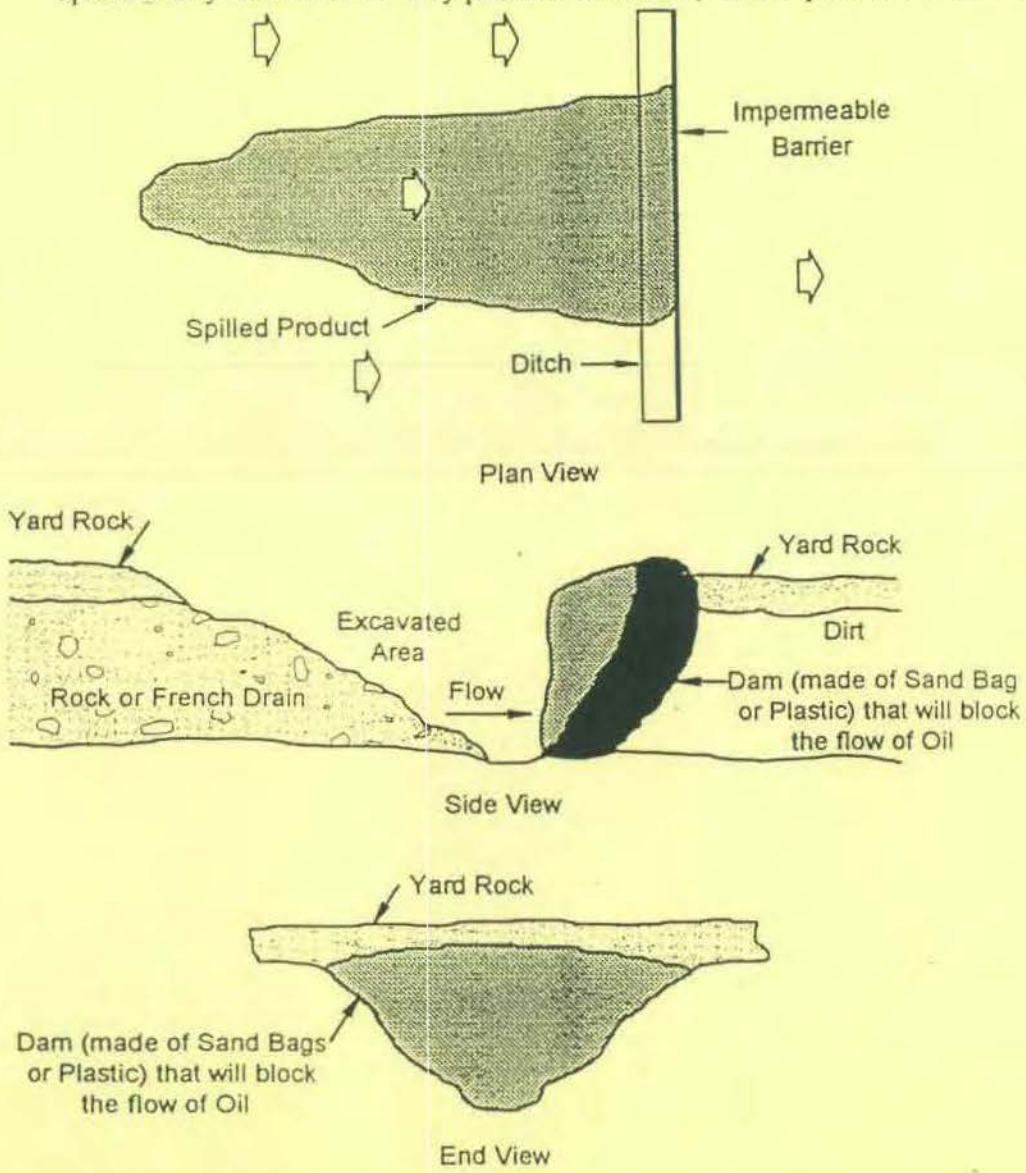

Figure 14. Interceptor Trenching/French Drainage

Follow these procedures for containing oils spills utilizing Interceptor trenching

- Remove yard rock from drain downslope from spill.
- Build earth or plastic sheeting dam on downslope side.
- Pump or skim oil from hole.

Solid Dams for Drainage Ditches, Canals, and Rivers (Less than I knot of current)

If water flow is non-existent in a drainage ditch, canal, or small river, and construction equipment is available, earthen dams can be constructed to abate oily product movement. Sandbags can be used to reinforce or build an earthen dam (Figure 15). Lining the earthen dam with polyethylene can improve the impermeability of the earthen dam. Sorbent matting or boom and portable skimmers can be used to remove the oily product from inside the dam.

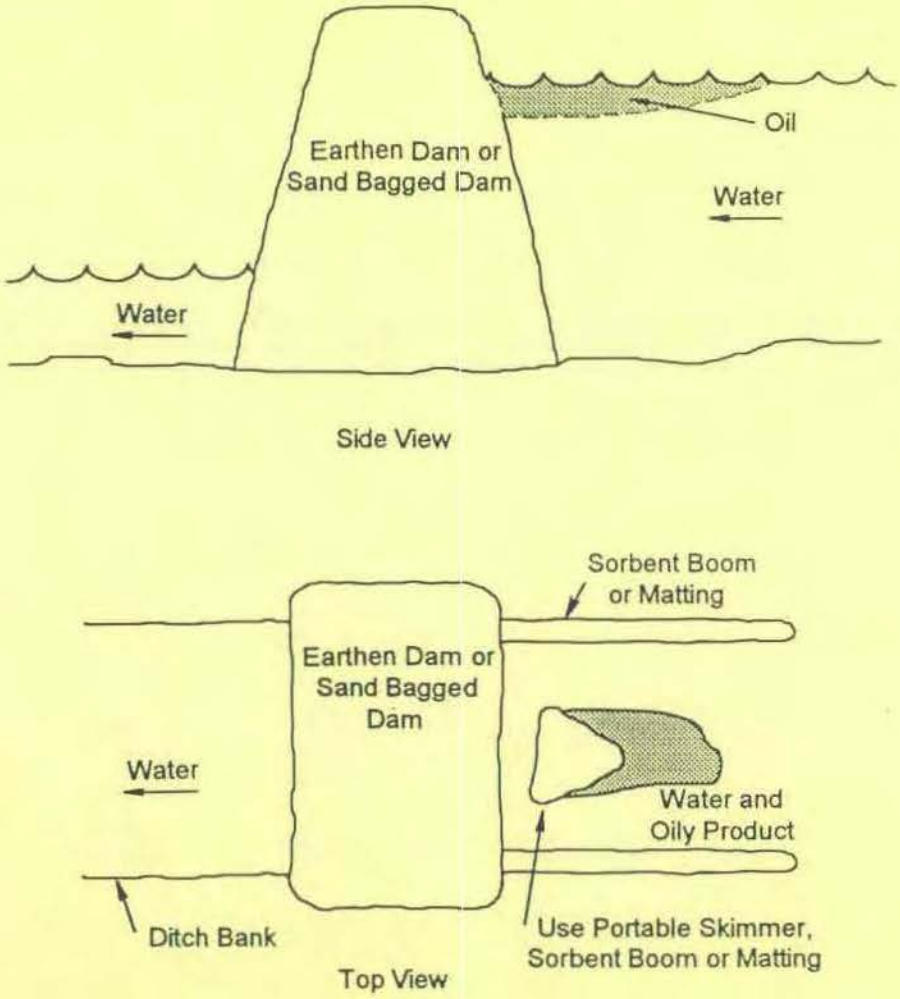

Figure 15. Sandbag and Earthen Dams

Sorbent Booms for Drainage Ditches, Canals, and Rivers (1-3 knots of current)

Sorbent boom was designed to provide very *limited containment or deflection capability*, while absorbing oily product (Figure 19a). Sorbent boom is an operational compromise between flat sorbent matting and standard skirted containment boom. Flat sorbents offer the most surface area for soaking up oil, but have no containment or deflection capabilities. Traditional skirted oil boom contains or deflects oily product, but absorbs nothing. A sorbent boom is most effective when used in conjunction with sorbent matting or pads, *but only in light currents*. Sorbent boom is available in 4, 8, 10, and 20 foot lengths and 4, 6, and 8 inch diameters.

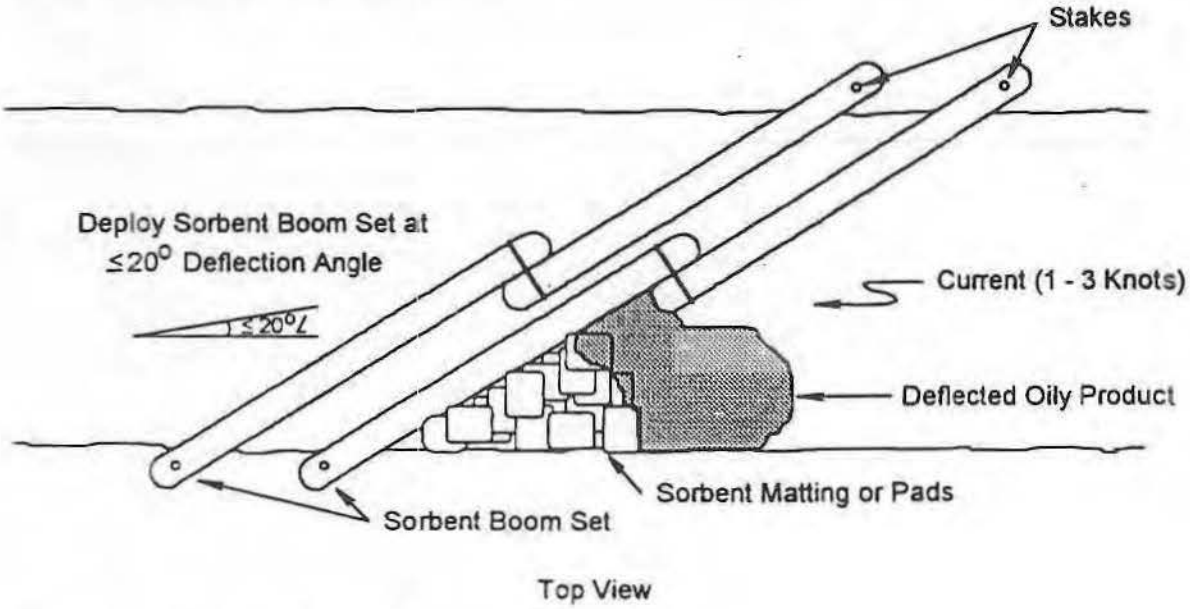

Figure 19a. Sorbent Boom 1

Follow these instructions for using Sorbent Boom 1:

- Use sorbent boom in paired lengths to assure minimal leakage.
- If current is evident, assure deflection angle is 20 degrees or less.
- Oily product will collect at apex of sorbent boom/shoreline angle. Use sorbent matting and pads, or portable skimmers to clean oily product.

Sorbent Booms for Drainage Ditches, Canals, and Rivers (1-3 knots of current)

Sorbent boom was designed to provide very *limited containment or deflection capability,* while absorbing oily product (Figures 19b). Sorbent boom is an operational compromise between flat sorbent matting and standard skirted containment boom. Flat sorbents offer the most surface area for soaking up oil, but have no containment or deflection capabilities. Traditional skirted oil boom contains or deflects oily product, but absorbs nothing. A sorbent boom is most effective when used in conjunction with sorbent matting or pads, *but only in light currents.* Sorbent boom is available in 4, 8, 10, and 20 foot lengths and 4, 6, and 8 inch diameters.

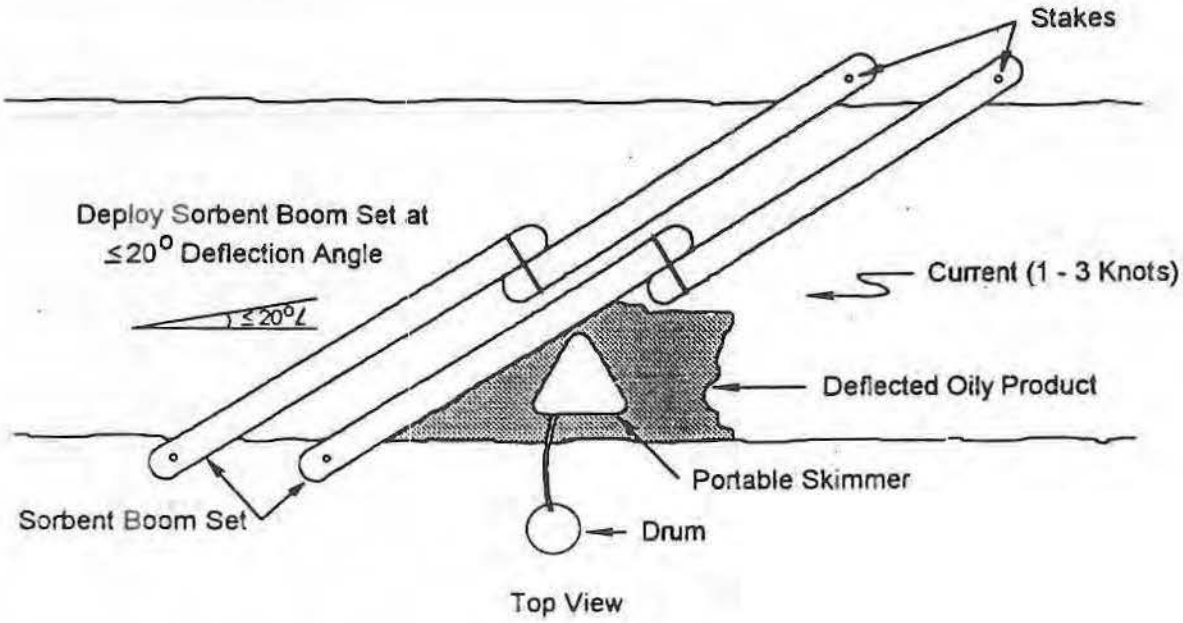

Figure 19b. Sorbent Boom 2

Follow these instructions for using Sorbent Boom 2:

- Use sorbent boom in paired lengths to assure minimal leakage.
- If current is evident, assure deflection angle is 20 degrees or less.
- Oily product will collect at apex of sorbent boom/shoreline angle. Use sorbent matting and pads, or portable skimmers to clean oily product.

Sorbent Booms for Drainage Ditches, Canals, and Rivers (1-3 knots of current)

Sorbent boom was designed to provide very *limited containment or deflection capability,* while absorbing oily product (Figures 19c). Sorbent boom is an operational compromise between flat sorbent matting and standard skirted containment boom. Flat sorbents offer the most surface area for soaking up oil, but have no containment or deflection capabilities. Traditional skirted oil boom contains or deflects oily product, but absorbs nothing. A sorbent boom is most effective when used in conjunction with sorbent matting or pads, *but only in light currents.* Sorbent boom is available in 4, 8, 10, and 20 foot lengths and 4, 6, and 8 inch diameters.

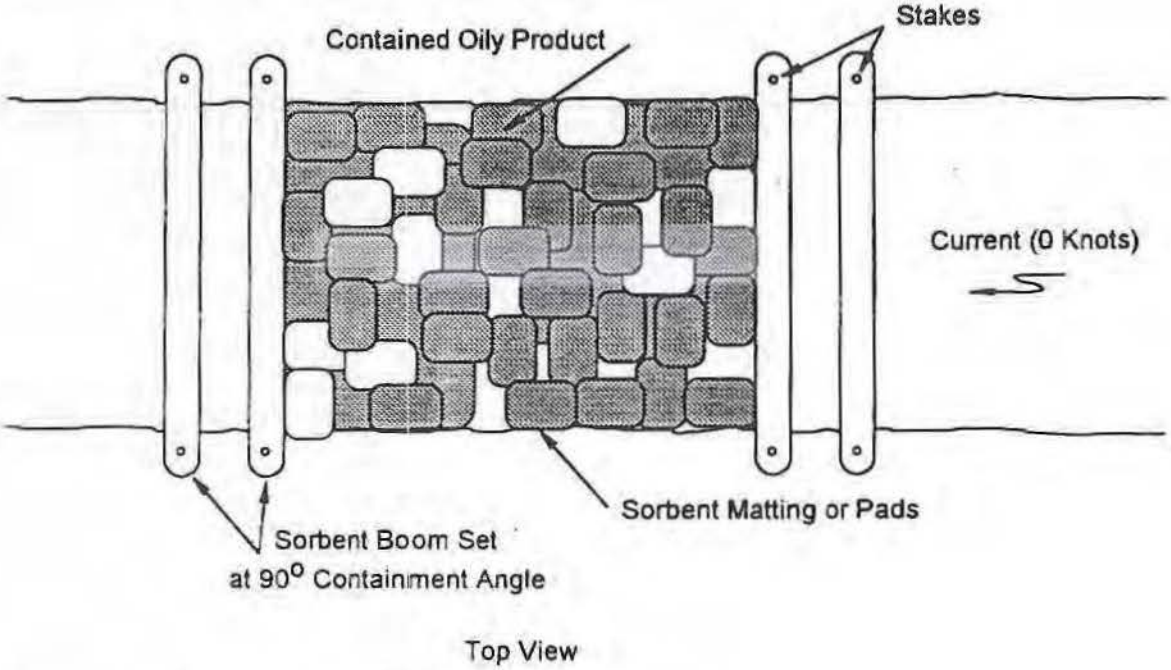

Figure 19c. Sorbent Boom 3

Follow these instructions for using Sorbent Boom 3:

- Use sorbent boom in paired lengths to contain oily product and assure minimal leakage.
- Sorbent matting or pads can be used inside the sorbent booming to clean oily product.
- If available, portable skimmers can be used to clean oily product from open water. Sorbent matting or pads must still be used to clean shoreline areas.
- Should sorbent matting and pads, or portable skimmers be unavailable, a third set of sorbent booms walked back and forth, may be used to clean oily product.

Sorbent Booms for Drainage Ditches, Canals, and Rivers (1-3 knots of current)

Sorbent boom was designed to provide very *limited containment or deflection capability,* while absorbing oily product (Figures 19d). Sorbent boom is an operational compromise between flat sorbent matting and standard skirted containment boom. Flat sorbents offer the most surface area for soaking up oil, but have no containment or deflection capabilities. Traditional skirted oil boom contains or deflects oily product, but absorbs nothing. A sorbent boom is most effective when used in conjunction with sorbent matting or pads, *but only in light currents.* Sorbent boom is available in 4, 8, 10, and 20 foot lengths and 4, 6, and 8 inch diameters.

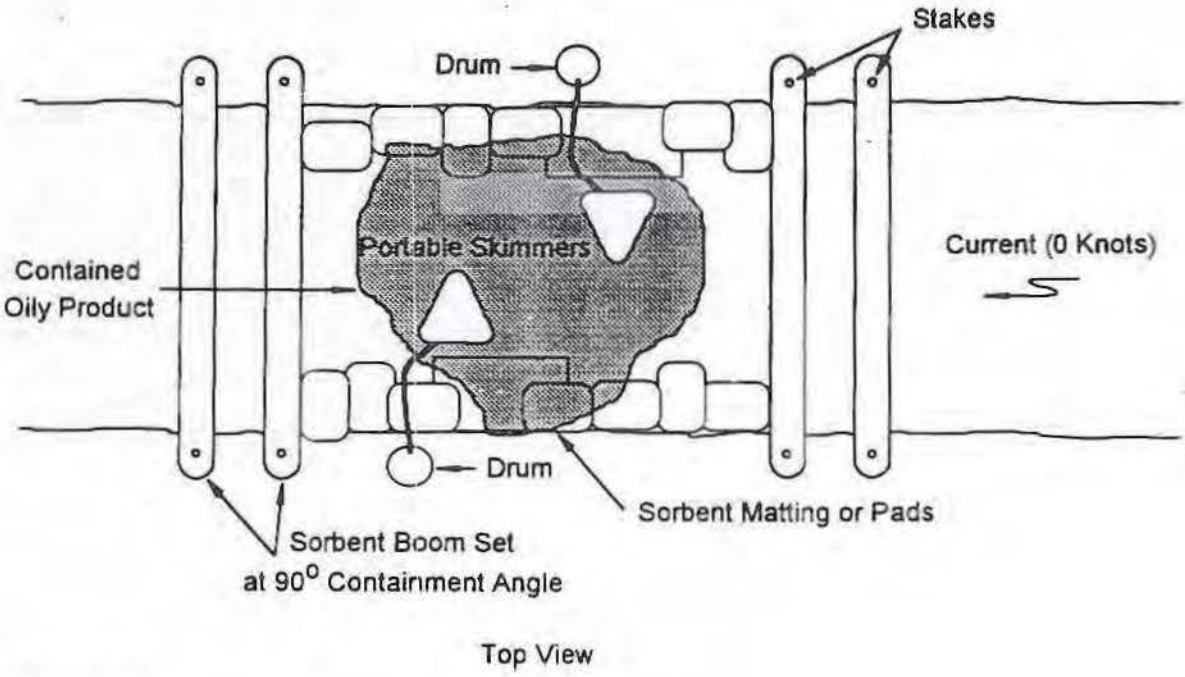

Figure 19d. Sorbent Boom 4

Follow these instructions for using Sorbent Boom 4:

- Use sorbent boom in paired lengths to contain oily product and assure minimal leakage.
- Sorbent matting or pads can be used inside the sorbent booming to clean oily product.
- If available, portable skimmers can be used to clean oily product from open water. Sorbent matting or pads must still be used to clean shoreline areas.
- Should sorbent matting and pads, or portable skimmers be unavailable, a third set of sorbent booms walked back and forth, may be used to clean oily product.

Sorbent Booms for Drainage Ditches, Canals, and Rivers (1-3 knots of current)

Sorbent boom was designed to provide very *limited containment or deflection capability*, while absorbing oily product (Figures 19e). Sorbent boom is an operational compromise between flat sorbent matting and standard skirted containment boom. Flat sorbents offer the most surface area for soaking up oil, but have no containment or deflection capabilities. Traditional skirted oil boom contains or deflects oily product, but absorbs nothing. A sorbent boom is most effective when used in conjunction with sorbent matting or pads, *but only in light currents*. Sorbent boom is available in 4, 8, 10, and 20 foot lengths and 4, 6, and 8 inch diameters.

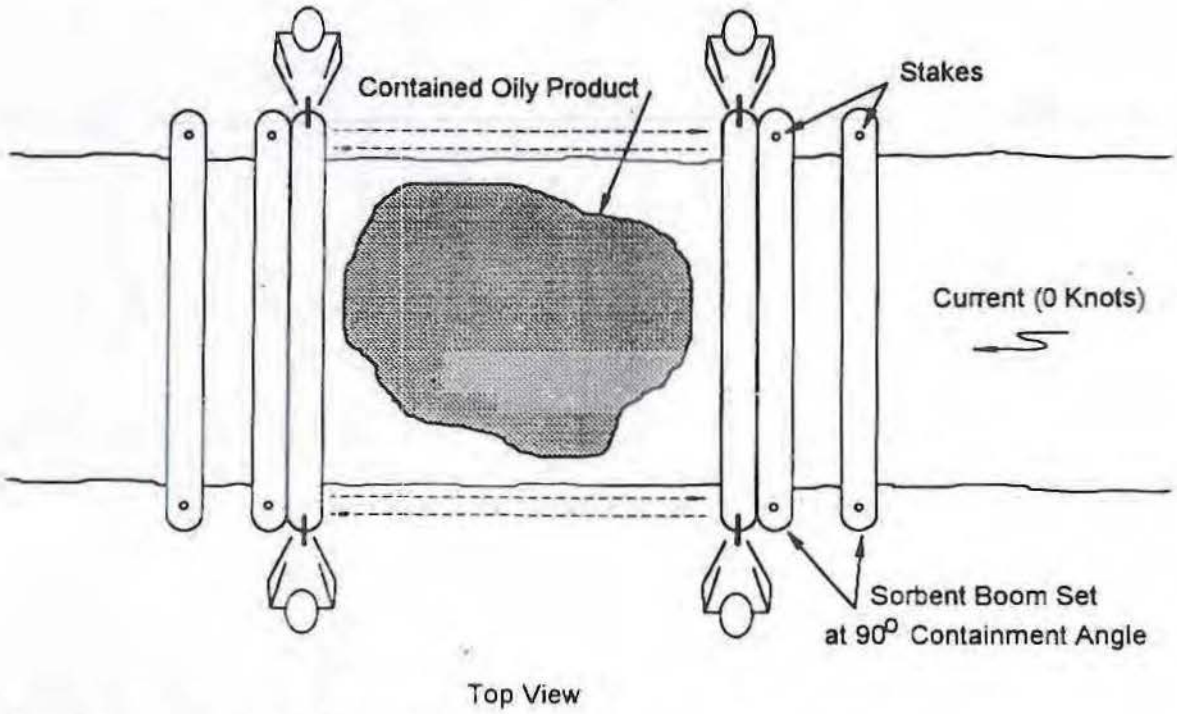

Figure 19e. Sorbent Boom 5

Follow these instructions for using Sorbent Boom 5:

- Use sorbent boom in paired lengths to contain oily product and assure minimal leakage.
- Sorbent matting or pads can be used inside the sorbent booming to clean oily product.
- If available, portable skimmers can be used to clean oily product from open water. Sorbent matting or pads must still be used to clean shoreline areas.
- Should sorbent matting and pads, or portable skimmers be unavailable, a third set of sorbent booms walked back and forth, may be used to clean oily product.