APPENDIX A
FRAMEWORK ACCESS ROAD SITING AND MANAGEMENT PLAN

TABLE OF CONTENTS

A1.0 INTRODUCTION 1
A2.0 PLAN PURPOSE 1
A3.0 PLAN UPDATES 1
A4.0 REGULATORY 1
A5.0 ACCESS ROAD MANAGEMENT PRACTICES 2
A6.0 DESIGN FEATURES AND BEST MANAGEMENT PRACTICES 3
A7.0 REFERENCES 5

ACRONYMS

Applicant	TransWest Express LLC, also TransWest
AUMs	a unit of measure equal to the amount of forage needed to sustain one animal unit (or its equivalent) for one month
BLM	Bureau of Land Management
BMP	Best Management Practice
CDOT	Colorado Department of Transportation
COM Plan	Construction, Operation, and Maintenance Plan
DEIS	Draft Environmental Impact Statement
EMM	Environmental Mitigation Measure
FEIS	Final Environmental Impact Statement
FSH	Forest Service Handbook
FSM	Forest Service Manual
IRAs	Inventories Roadless Areas
NDOT	Nevada Department of Transportation
NFS	National Forest System
NTP	Notice to Proceed
Plan	Access Road Siting and Management Plan
POD	Plan of Development
Project	TransWest Express Transmission Project, also TWE Project
ROD	Record of Decision
ROW	right-of-way
SWPPP	Stormwater Pollution Prevention Plan
TransWest	TransWest Express LLC, also Applicant
TWE Project	TransWest Express Transmission Project, also Project
UDOT	Utah Department of Transportation
USACE	United States Army Corps of Engineers
USFS	United States Forest Service
WDOT	Wyoming Department of Transportation

A1.0 INTRODUCTION

This framework Access Road Siting and Management Plan (Plan) addresses regulatory compliance, access road management practices, design features and Best Management Practices (BMPs) to reduce environmental impacts related to construction of new access roads during construction of the TransWest Express Transmission Project (TWE Project or Project) by TransWest Express LLC (TransWest or Applicant) and its Construction Contractor(s).

A2.0 PLAN PURPOSE

The purpose of this plan is to provide the Bureau of Land Management (BLM), U.S. Forest Service (USFS) and other agencies with a description of the types and location of access roads associated with the construction, operation, and maintenance of the Project. The goal of this Plan is to establish management practices and mitigation measures that, when implemented, will avoid and minimize impacts from construction of the transmission line and any associated access roads. These practices and measures are intended to mitigate the effects of construction access on environmental resources.

A3.0 PLAN UPDATES

The initial layout of all access roads to each structure location for the selected Agency Preferred Alternative will be provided in the Record of Decision (ROD) Plan of Development (POD). The Plan will include detailed mapping of the backbone access network, existing access, existing access with improvements, overland access and proposed new access. The Notice to Proceed (NTP) POD will include final field verified access road layouts specific to each construction segment. TransWest will be responsible for developing the final Access Road Siting and Management Plan. Local BLM Field Offices may require field verification to approve the final Access Road Siting and Management Plan.

A4.0 REGULATORY

A number of agencies have jurisdiction over the transportation-related components of the Project. These include the BLM, the USFS, Wyoming Department of Transportation (WDOT), Colorado Department of Transportation Department (CDOT), Utah Department of Transportation (UDOT), Nevada Department of Transportation (NDOT), Federal Highway Administration, local law enforcement and road departments, and local highway districts in the counties crossed by the Project. The Construction Contractor must file encroachment and oversized vehicle permit applications with appropriate road agencies prior to construction for those areas where the transmission line crosses public roads or where oversized vehicles will be used on public roads.

Other permits and approvals not directly related to transportation could affect the construction, use, and/or maintenance of roads in certain areas. Persons responsible for Project transportation activities must be familiar with all relevant sections of the Project's POD, of which this Plan is a part.

Where new roads are required or where improvements to existing roads are required, access roads will be designed in accordance with standards and guidelines for Non-constructed Roads and Routes as described in "The Gold Book – Surface Operating Standards and Guidelines for Oil and Gas Exploration and Development" (AASHTO 2006). Portions of the access road network requiring design and construction to a more stringent standard will be identified in this Access Road Siting and Management Plan to be submitted with the NTP POD.

On BLM-managed lands, new road construction and existing roads improved for Project use in some locations may be required to meet or exceed the minimum standards of width, alignment, grade, surface, and other requirements presented in the BLM Travel Management Program and BLM

Manual Section 9113 (BLM 1985). On USFS lands, road construction and existing roads improved for Project use in some locations may be required to comply with the Forest Service Manual (FSM) (USFS 1999a) and Forest Service Handbook (FSH) (USFS 1999b). Some example sections relative to the Project are FSH 7709.56 – *Road Preconstruction Handbook (Forest Service 2010)*, FSH 7709.57 – *Road Construction Handbook (Forest Service 1992)*, and 7709.58 – *Transportation System Maintenance Handbook (Forest Service 2009b).*

Existing travel and transportation networks identified in BLM and USFS land use plans or travel management plans will be used as guidance for the identification and siting of access roads for the Project. These federal plans are designed to provide decision-makers with information to manage road systems that are safe and responsive to public needs and desires, are economically and efficiently managed, and have minimal negative ecological impacts on the land. The plans include designated areas for motorized use, prohibition of some uses to protect resources, or limitations on road use at certain times of the year for resource protection.

No new or improved access roads may be sited within USFS Inventoried Roadless Areas (IRA). IRAs are identified as areas of National Forest Service (NFS) land currently inventoried for planning purposes as roadless. The 2001 Roadless Area Conservation Rule does not prohibit special use developments, but generally does prohibit the construction or reconstruction of any roads associated with these uses within the boundaries of an IRA. Construction of any portions of the TWE Project which fall within IRA or other areas where access road construction is prohibited or restricted will follow the Roadless Construction Methods described in Section 5.7.3 of the Final Environmental Impact Statement (FEIS) POD.

A5.0 ACCESS ROAD MANAGEMENT PRACTICES

With the exception of IRAs and other sensitive areas identified by land management agencies, the TWE Project will require surface access to all structures and work areas during construction to allow vehicles and equipment to access the location of each transmission structure. Existing public roads will be used as the backbone access road network to access the selected Agency Preferred Alternative. Construction of new access roads will be required only as necessary to access structure sites lacking direct access from existing roads, or where topographic conditions (e.g., steep terrain, rocky outcrops, and drainages) prohibit safe overland access to the site. New access road layouts will require the appropriate approvals from jurisdictional agencies.

A route-specific plan will be developed for the selected Alternative and will be described within the Access Road Siting and Management Plan to be submitted with the NTP POD. The types of access including backbone access, existing access with improvements, overland access and proposed new access will be identified. A detailed map book will be provided showing the location of the 250-foot-wide transmission line right-of-way (ROW), proposed structure locations, backbone access network, and existing access that do not require improvements, existing access that require improvements, and new access to be constructed. The surface type (gravel, paved or other) and terrain type (flat, rolling, steep and mountainous) will also be defined. The detailed Plan for the selected Agency Preferred Alternative will be used to define location-specific mitigation measures, as needed.

Prior to construction, authorized access roads and associated limits of disturbance will be clearly delineated and marked in the field. The Construction Contractor(s) will review the location of approved access and will be responsible for ensuring construction travel is limited to those approved access roads and limits of disturbance.

All field personnel will attend an environmental training program. As part of this program, field personnel will be instructed to use only approved access roads, drive within the limits of disturbance, obey posted and jurisdictional speed limits, and become familiar with the Flagging, Fencing and Signage Plan (Appendix I).

A6.0 DESIGN FEATURES AND BEST MANAGEMENT PRACTICES

In addition to applicable design and operational standards, regulations, laws and permit requirements, the following design features and BMPs are intended to help reduce impacts related to construction of new access roads. Note that the Construction, Operation and Maintenance Plan will be incorporated into the NTP POD.

> **TWE-5**: The Construction, Operation and Maintenance (COM) Plan will display the location of Project infrastructure (i.e. towers, access roads, substations) and identify short-term and long-term land and resource impacts and the mitigation measures that will be implemented for site-specific and resource-specific environmental impacts.
>
> **TWE-6:** The Construction, Operation and Maintenance (COM) Plan will include an Access Road Plan that incorporates relevant agency standards regarding road design, construction, maintenance, and decommissioning. The Access Road Plan will incorporate BMPs, stipulated by the agencies in their respective decision documents and permits.
>
> **TWE-8:** Crossings of streams and waterways will be done in compliance with federal, state, and local regulations. Roads will be built as near as possible at right angles to the streams and washes (Arizona crossing). Culverts will be installed where necessary. All construction and maintenance activities will be conducted in a manner that will minimize disturbance to vegetation, drainage channels, and intermittent or perennial stream banks. In addition, fugitive dust will be controlled during road construction as required by state and local permits. . All existing roads will be left in a condition equal to, or better than, their condition prior to the construction of the transmission line. Structures will be sited with a minimum distance of 200 feet from streams, wherever possible.
>
> **TWE-9:** All construction vehicle movement outside the ROW normally will be restricted to pre-designated access or public roads.
>
> **TWE-12:** Except for repairs necessary to make roads passable, no widening or upgrading of existing access roads will be undertaken in the area of construction and operation, where soils or vegetation are sensitive to disturbance. In designated areas, structures will be placed to avoid sensitive features such as, but not limited to, riparian areas, water courses and cultural sites, or to allow conductors to clearly span the features within limits of standard structure design. This will minimize the amount of disturbance to the sensitive feature or reduce visual contrast.

Additional BMPs and Environmental Mitigation Measures (EMMs) identified in the Draft Environmental Impact Statement (DEIS) are listed below. These measures have not been finalized at this time and may be updated, changed, or eliminated in future revisions of this Plan.

> **TRAN-1:** The Applicant shall prepare an access road siting and management plan that incorporates relevant agency standards regarding road design, construction, maintenance, and

decommissioning. Corridors would be closed to public access unless determined by the appropriate federal land manager to be managed as part of an existing travel and transportation network in a land use plan or subsequent travel management plan(s).

TRAN-2: The Applicant shall prepare a comprehensive transportation plan for the transport of transmission tower or pipeline components, main assembly cranes, and other large equipment. The plan should address specific sizes, weights, origin, destination, and unique equipment handling requirements. The plan should evaluate alternative transportation routes and should comply with state regulations and all necessary permitting requirements. The plan should address site access roads and eliminate hazards from truck traffic or impacts to normal traffic flow. The plan should include measures such as informational signage and traffic controls that may be necessary during construction or maintenance of facilities.

TRAN-3: Applicants shall consult with local planning authorities regarding increased traffic during the construction phase, including an assessment of the number of vehicles per day, their size, and type. Specific issues of concern (e.g., location of school bus routes and stops) should be identified and addressed in the traffic management plan.

TRAN-4: Additional access roads needed for decommissioning shall follow the paths of access roads established during construction to the greatest extent possible; all access roads not required for the continued operation and maintenance of other energy systems present in the corridor shall be removed and their footprints reclaimed and restored.

PHS-5: The health and safety program shall establish a safety zone or setback from roads and other public access areas that is sufficient to prevent accidents resulting from various hazards. It should identify requirements for temporary fencing around staging areas, storage yards, and excavations during construction or decommissioning activities. It should also identify measures to be taken during the operations phase to limit public access to those components of energy facilities that present health or safety risks.

AGRI-3: Minimize locating access roads within the two-mile transmission line corridor in areas with croplands. For croplands that cannot be avoided by access roads, establish procedures for determining temporary and permanent access road locations with landowners and operators, and establish protection methods for roads over croplands that cannot be avoided by construction activities. Restore locations of temporary access roads to pre-construction conditions and leave permanent access roads intact through mutual agreement with the landowner and operator.

LU-1: The proponent will develop an approved Plan of Development (POD) and shall coordinate with land managers on final structure placement, including all aboveground components, access roads, and permanent disturbance areas, to ensure optimal compatible land use.

RANGE-1: Prior to construction of each segment, access road, or ancillary facility crossing a BLM or USFS grazing allotment, TransWest shall coordinate with the associated BLM Field Office and USFS national forest concerning planned development and operations that will occur and identify potential livestock management issues. TransWest will provide a schedule and locations of construction activities on affected grazing allotments to the BLM Field Office and USFS national forest to be provided to the affected grazing permittees. The construction activities schedule and construction activity locations shall be provided on a date

early enough to allow grazing permittees sufficient time to make decisions and allocate their resources during the construction time period.

RANGE-2: Prior to construction of transmission line segments, access road, or ancillary facilities, active range improvement locations shall be inventoried. Based on the results of these inventories, no roads, or ancillary facilities would be placed within 200 meters of range improvements, including livestock and wildlife water sources/systems. If avoidance is not feasible, features would be relocated to an alternate location per BLM, USFS, or state wildlife agency guidance.

RANGE-6: Prior to construction and placement of permanent facilities and access roads, TransWest shall coordinate with the associated BLM Field Office and USFS forest to identify areas where the placement of tower structures, facilities, and access roads would prevent access to either a portion or all of a livestock grazing allotment resulting in the livestock grazing allotment becoming unusable or decreasing the AUMs (a unit of measure equal to the amount of forage needed to sustain one animal unit (or its equivalent) for one month) available to a point that requires the grazing permit to be modified. In these areas, corrective actions would then be identified including rearranging of grazing allotment fences, additional access roads to the grazing allotment, re-arrangement of project facilities and access roads as feasible, etc.

GEN-5: Corridors are to be efficiently used. The Applicant, assisted by the appropriate agency, shall consolidate the proposed infrastructure, such as access roads, wherever possible and utilize existing roads to the maximum extent feasible, minimizing the number, lengths, and widths of roads, construction support areas, and borrow areas.

WAT-7: A Stormwater Pollution Prevention Plan (SWPPP) permit will be obtained and its provisions implemented for all affected areas before any ground disturbance activities commence.

WAT-10: The Applicant shall minimize stream crossings by access roads to the extent practicable. All structures crossing intermittent and perennial streams should be located and constructed so that they do not decrease channel stability, increase water velocity, or impede fish passage.

WET-3: Access roads will be routed around riparian areas, wetlands, intermittent or perennial drainages, and ephemeral channels to the extent practical. If jurisdictional wetlands or waters of the U.S. cannot be avoided, U.S. Army Corps of Engineers (USACE) approved construction techniques for construction in wetlands and waters of the U.S. will be applied. BLM and USFS construction techniques for non-jurisdictional wetlands, riparian areas, intermittent drainages, and ephemeral channels would be applied on BLM and USFS lands, as appropriate. These include the use of timber mats, erosion controls, and the placement of equipment outside of the wetland, riparian areas, intermittent drainages, and ephemeral channels boundaries.

A7.0 REFERENCES

American Association of State Highway and Transportation Officials (AASHTO). 2006. The Gold Book – Surface Operating Standards and Guidelines for Oil and Gas Exploration and Development" AASHTO, 4th Edition, 2006.

Bureau of Land Management (BLM). 1985. Travel Management Program Manual, Section 9113. Internet website: http://www.blm.gov/pgdata/etc/medialib/blm/mt/blm_programs/energy/oil_and_gas/operations/gold_book.Par.10040.File.dat/9113.pdf. Accessed August 3, 2011.

United States Forest Service (USFS). 1999a. Forest Service Manual. Internet website: http://www.fs.fed.us/im/directives/dughtml/fsm.html. Accessed on August 10, 2011.

_____. 1999b. Forest Service Handbook. Internet website: http://www.fs.fed.us/im/directives/dughtml/fsh_1.html. Accessed on August 10, 2011.

APPENDIX B
AVIAN PROTECTION PLAN

Avian Protection Plan

Prepared by

TRANSWEST EXPRESS LLC

November 2014

TABLE OF CONTENTS

1.0 INTRODUCTION **1**
2.0 BACKGROUND **1**
2.1 Scope and Limitations **2**
3.0 AVIAN PROTECTION PLAN PURPOSE AND NEED **2**
3.1 Applicable Laws and Regulations **3**
3.1.1 Federal **3**
3.1.2 State **5**
3.2 Conditions of Approval and Requirements **5**
3.3 Reliability **5**
3.4 Customer Relations **5**
4.0 PRINCIPLES OF AVIAN PROTECTION **5**
5.0 AVIAN INTERACTIONS AND POTENTIAL ISSUES **6**
5.1 Avian Electrocutions **6**
5.2 Avian Collisions **7**
5.3 Biological Factors Related to Bird Collisions **7**
5.3.1 Environmental Factors Related to Bird Collisions **7**
5.3.2 Power Line Factors Related to Bird Collisions **8**
6.0 CONSTRUCTION DESIGN STANDARDS **9**
7.0 TRAINING / MONITORING, DEVELOP TRAINING MATERIALS **9**
8.0 AREAS OF RESPONSIBILITY AND PERMIT COMPLIANCE **10**
9.0 NEST MANAGEMENT **11**
9.1 Definition of an Active Nest **11**
9.2 Inactive Nests **12**
9.3 Operations and Maintenance Procedures **12**
9.4 Problem Nests **13**
10.0 ADAPTIVE MANAGEMENT **14**
10.1 Retrofit/ Remedial Protective Measures **14**
10.2 Incident Tracking **15**
11.0 EXPENDITURE TRACKING **15**
12.0 QUALITY CONTROL **16**
13.0 LITERATURE CITED **17**

ATTACHMENTS:

ATTACHMENT A SPECIAL STATUS AVIAN SPECIES 19
ATTACHMENT B AVIAN NEST AND INCIDENT REPORTING FORM 32
ATTACHMENT C AVIAN INCIDENT REPORTING FORM 34
ATTACHMENT D DESIGN STANDARDS 36

1.0 INTRODUCTION

TransWest Express LLC (TransWest) is an independent transmission developer committed to responsible practices across all aspects of transmission line siting, operations and design. Based in Denver, Colorado, the company guides its operations under environmental programs and principles led by a dedicated environmental team with over 50 years of experience in the energy development, generation and transmission industries. TransWest also retained independent consultants, ecologists and biologists to help the firm develop a comprehensive wildlife conservation strategy. Designed to avoid and minimize potential impacts on wildlife in general and avian species in particular, the strategy is based on science and best practices from the electric transmission industry and other appropriate sources.

TransWest is developing the TransWest Express Transmission Project (the TWE Project or Project), an extra high-voltage, direct current regional electric transmission system. The TWE Project will reliably deliver cost-effective renewable energy produced in Wyoming to the Desert Southwest region (California, Nevada, Arizona), ultimately helping contribute to a cleaner world, strengthen the electric grid, and provide much-needed electricity to millions of homes and businesses every year. The TWE Project will deliver enough clean, sustainable energy to power nearly 2 million homes and reduce greenhouse-gas emissions equivalent to taking 1.5 million cars from the road.

Major components of the TWE Project include a ±600 kilovolt (kV) DC transmission line and two alternating current (AC)/ direct current (DC) converter stations - a Northern AC/DC Converter Station (Northern Terminal) to be located near Sinclair, Wyoming and a Southern AC/DC Converter Station (Southern Terminal) to be located at the Marketplace Hub in the Eldorado Valley, approximately 15 miles south of Boulder City, Clark County, Nevada. The TWE Project will also include, among other facilities, two ground electrode systems and a low voltage overhead line to connect the ground electrode system to each AC/DC converter. The low voltage overhead line will be similar to a 34.5 kV subtransmission line.

2.0 BACKGROUND

TransWest is committed to protecting avian species that occur within the vicinity of its facilities. This Avian Protection Plan (APP) has been developed to protect resident and migrant birds that may interact with the TransWest Express Transmission Project (TWE Project or Project). TransWest is committed to maintaining the reliability of the TWE Project in a cost effective manner while meeting the regulatory requirements to conserve avian species.. The responsibility of effectively improving avian safety and minimizing avian risk at its facilities lies with both TransWest management and its employees.

To this end, TransWest will:

- Implement this APP;
- Ensure that its actions comply with the most recent applicable laws, regulations, and permits, and incorporate as applicable Avian Power Line Interaction Committee (APLIC) guidelines;
- Document bird mortalities; problem structures or locations; and problem nests;
- Provide information, resources, and training to improve its employees' knowledge and awareness of avian protection and the implementation of the TransWest avian protection program;
- Identify key TransWest personnel responsible for ensuring accountability and compliance with this APP;

- Identify key U.S. Fish and Wildlife Service (USFWS) personnel responsible for reporting and permitting; and
- Maintain the integrity of the transmission line and repair or retrofit structures as necessary if impacts to avian species are detected.

The purpose of this APP is to establish a program to manage avian safety on the TWE Project. This APP has been developed consistent with APLIC's principles of avian protection (APLIC 2005) to support TransWest's commitment to reduce impacts to avian resources. This APP supports compliance with the Migratory Bird Treaty Act (MBTA) of 1918 (16 United States Code [U.S.C.] §§703 – 712), the Bald and Golden Eagle Protection Act (BGEPA) of 1940 (16 U.S.C. §§668 – 668d), and the Endangered Species Act (ESA) of 1973, as amended (16 U.S.C. §§1531 – 1544), and appropriate state requirements. Plans, methods, and direction are outlined to ensure that birds are protected on TransWest facilities associated with the TWE Project, providing a framework for documenting the success of TransWest's good-faith efforts to protect avian species and to comply with the laws and regulations discussed in Section C2.1.

This APP has been written with consideration to and guidance from the data and suggestions presented in APLIC's Mitigating Bird Collisions with Power Lines: The State of the Art in 2012 (APLIC 2012), Avian Protection Plan Guidelines (APLIC 2005) and Suggested Practices for Avian Protection on Power Lines: The State of the Art in 2006 (APLIC 2006). In addition, existing information on bird use in the Project area will be combined with pre-construction Project-specific survey information to effectively address avian safety specific to the long-term operation of the TWE Project. The protective measures and methods described in this document provide a mechanism for implementing and tracking mitigation measures to operate the TWE Project in the most avian safe manner possible.

The key TransWest staff member responsible for ensuring accountability and compliance with this APP is the APP Program Coordinator. The APP Program Coordinator may be contacted at 303-298-1000.

The key USFWS personnel shall be the Region 6 Migratory Bird Program Office. The office may be contacted at 303-236-7905.

2.1 Scope and Limitations

This APP presents the framework for developing a program of specific actions implemented comprehensively to support avian safety on the TWE Project. It is not to be considered a delineation of legal requirements. Instead, it provides guidance for achieving and maintaining legal compliance under the regulations related to avian protection, minimizing avian-related interruptions in service, and documenting efforts to improve avian safety.

TransWest has set the overall goal of advancing progress toward an avian safe transmission system. Through a policy of avian protection, TransWest will improve its service to customers, ensure regulatory compliance, reduce costs, and document good-faith efforts to diminish risks to avian species. As such, this plan is considered a "living document" and is intended to be revised and updated as goals are achieved, innovative solutions are developed to mitigate impacts, agency guidance is adjusted, and conditions of the TWE Project warrant.

3.0 AVIAN PROTECTION PLAN PURPOSE AND NEED

Under certain conditions, power lines may present risk to avian species (APLIC 2006). However, empirical data is highly limited and usually site-specific, which allows for broad estimates of risk based on a series of assumptions. While the exact risk or level of impacts may be difficult to quantify,

the most obvious risks from power lines are associated with birds directly contacting facilities and being killed either by electrocution or impact. In addition, birds nesting on utility structures may face increased risk of mortality by regularly maintaining close contact with transmission structures. Such risks also become costly to the utility company because of the risk of outages due to fault-triggering electrocutions, contact of nesting material with energized elements, prey falling on live equipment, and flashover caused by bird waste (streamers). Regulatory agencies and utilities recognize that avian interactions can be ecologically significant events and have worked collaboratively (through organizations such as APLIC) for several decades to reduce both system and avian impacts.

One mechanism for utilities to cooperatively engage agencies on operational avian safety issues is the APP. This APP exclusively addresses TransWest's avian protection program for construction as well as operations and maintenance (O&M), and initiates an avian safety framework for the life of the TWE Project.

The TWE Project is a ±600 kilovolt (kV) extra-high voltage (EHV) direct current (DC) transmission system extending from south-central Wyoming to southern Nevada. The TWE Project begins at a northern terminal near Sinclair, Wyoming and terminates at a southern terminal at the Marketplace Hub in the Eldorado Valley near Boulder City, Nevada. At each of the terminals, there will be an alternating current/direct current (AC/DC) converter station designed to convert the DC current carried by the TWE Project to AC current to be carried on the western United States AC electrical grid (the northern and southern terminals). The TWE Project is planned to interconnect into the Eldorado Substation, the McCullough Switching Station, the Marketplace Substation and the Mead Substation.

The TWE Project area spans approximately 750 miles of four western states. It passes through landscapes considered ecologically diverse because of their species' richness and endemicity. The extreme northeastern portion of the Project crosses the Central Flyway, a north south migration flyway along the eastern slope of the Rocky Mountains. The remainder of the Project occurs within the Pacific Flyway (USFWS 2012). Southern Utah and Nevada, with their mild climate, is a wintering destination for many migrant birds.

As a responsible corporation, TransWest strives to protect ecosystems and safeguard wildlife. Stewardship of the West's natural resources is the impetus for this avian protection program. There are four factors underlying the development of the program which are briefly presented in this section:

- Federal and State laws and regulations
- Conditions of approval and requirements identified in the right-of-way grants and special use authorizations for the Project
- Reliability
- Customer relations

3.1 Applicable Laws and Regulations

Most birds are protected under one or more state or federal regulations. Below is a brief summary of laws and other regulations governing avian protection applicable to the TWE Project.

3.1.1 Federal

Migratory Bird Treaty Act (MBTA)

The Migratory Bird Treaty Act (MBTA) is the cornerstone of migratory bird conservation and protection in the United States. The MBTA implements four treaties that provide for international protection of migratory birds. It has been described as a strict liability statute, meaning that proof of

intent, knowledge, or negligence is not an element of an MBTA violation. The statute's language is clear that actions resulting in a "taking" or possession (permanent or temporary) of a protected species, in the absence of an USFWS permit or regulatory authorization, are a violation of the MBTA.

The MBTA states, "Unless and except as permitted by regulations . . . it shall be unlawful at any time, by any means, or in any manner to pursue, hunt, take, capture, kill . . . possess, offer for sale, sell . . . purchase . . . ship, export, import . . . transport or cause to be transported . . . any migratory bird, any part, nest, or eggs of any such bird . . . . [The Act] prohibits the taking, killing, possession, transportation, import and export of migratory birds, their eggs, parts, and nests, except when specifically authorized by the Department of the Interior." *16 U.S.C. § 703.* The word "take" is defined by regulation as "to pursue, hunt, shoot, wound, kill, trap, capture, or collect, or attempt to pursue, hunt, shoot, wound, kill, trap, capture, or collect." *50 C.F.R. § 10.12.*

USFWS maintains a list of all species protected by the MBTA at 50 C.F.R. § 10.13. This list includes over one thousand species of migratory birds, including eagles and other raptors, waterfowl, shorebirds, seabirds, wading birds, and passerines. The MBTA does not protect introduced species such as the house (English) sparrow, European starling, rock dove (pigeon), Eurasian collared-dove, and non-migratory upland game birds. The USFWS maintains a list of introduced species not protected by the Act. *See* 70 Fed. Reg. 12,710 (2005).

The MBTA provides criminal penalties for persons who commit any of the acts prohibited by the statute in Section 703 on any of the species protected by the statute. *See 16 U.S.C. § 707.*

Endangered Species Act

In addition to the MBTA, some at risk bird species in the United States receive further protection under the Endangered Species Act of 1973 (16 U.S.C. §§1531-1544, as amended) (ESA). The ESA protects federally listed threatened or endangered species and their habitats from unlawful take, where "take" is defined as "to harass, harm, pursue, hunt, shoot, wound, kill, trap, capture, or collect, or to attempt to engage in any such conduct." It also prohibits the illegal import, export, carrying, transport, or shipment of any listed species without authorization from the Secretary of the Interior. With a submitted conservation plan, the Secretary may permit exceptions for scientific purposes, the propagation or survival of the affected species, or for instances where "taking is incidental to, and not the purpose of, the carrying out of an otherwise lawful activity." Violations of the ESA can result in civil penalties or, criminal violations.

Bald and Golden Eagle Protection Act

Under the authority of the Bald and Golden Eagle Protection Act (BGEPA), 16 U.S.C. §§ 668–668d, bald eagles and golden eagles are afforded additional legal protection. BGEPA prohibits the "take, sale, purchase, barter, offer of sale, purchase, or barter, transport, export or import, at any time or in any manner of any bald or golden eagle, alive or dead, or any part, nest, or egg thereof." *See 16 U.S.C. § 668.* BGEPA also defines take to include "pursue, shoot, shoot at, poison, wound, kill, capture, trap, collect, molest, or disturb," 16 U.S.C. § 668c, and includes criminal and civil penalties for violating the statute. *See 16 U.S.C. § 668.* USFWS has further defined the term "disturb" as agitating or bothering an eagle to a degree that causes, or is likely to cause, injury, or either a decrease in productivity or nest abandonment by substantially interfering with normal breeding, feeding, or sheltering behavior. *See 50 C.F.R. § 22.3*. BGEPA authorizes the USFWS to permit the take of eagles for certain purposes and under certain circumstances, including scientific or exhibition purposes, religious purposes of Indian tribes, and the protection of wildlife, agricultural, or other interests, so long as that take is compatible with the preservation of eagles. *See generally, 16 U.S.C. § 668a.*

3.1.2 State

State-specific regulations regarding species addressed in this APP have not been identified at this time.

3.2 Conditions of Approval and Requirements

TransWest has filed an application for Transportation and Utility Systems and Facilities on Federal Land (SF 299) for the TWE Project with the Bureau of Land Management (BLM) for the right-of-way grants necessary to construct, operate and decommission the TWE Project on federal land. The BLM determined that responding to TransWest's right-of-way application required the preparation of an Environmental Impact Statement (EIS) under the National Environmental Policy Act of 1969, as amended (NEPA). Western Area Power Administration, a Federal power marketing administration within the United States Department of Energy (Western), is acting as a joint lead agency with the BLM in the preparation of the EIS. Western is TransWest's development partner under its Transmission Infrastructure Program. The EIS contains a description of the environment in which the TransWest Project will be built and discloses potential impacts to resources that may be affected by the construction, operation and development of the TWE Project, including avian species. The EIS presents general practices for wildlife protection as well as conservation measures specifically addressing issues of avian protection. BLM's and Western's Records of Decision for the TWE Project may impose additional avoidance, minimization and mitigation measures for avian species beyond those set forth in this APP. If so, this APP will be updated as appropriate.

3.3 Reliability

Avian interactions with transmission systems have the potential to cause outages, result in equipment failures, shorten the lifespan of equipment, increase maintenance costs, and create safety issues. An avian-safe system increases reliability, results in fewer outages, reduces the exposure to risks for company personnel that respond to outages, and leads to less replacement of expensive equipment.

3.4 Customer Relations

The public places a high value on reliable electric service. TransWest, through implementation of this APP, seeks to minimize potential service disruptions and outages caused by avian interactions with TWE Project facilities. Communicating a program of avian protection administered in a cost conscious manner improves customer relations and makes good business sense.

4.0 PRINCIPLES OF AVIAN PROTECTION

The roots of APLIC avian protection planning lie in the development of system-wide avian safety programs to direct new-builds, implement remedial actions and track success, expenditures and incidents. Under this framework, twelve elements of avian safety were identified (APLIC 2005):

- Corporate policy
- Training
- Permit compliance
- Construction design standards
- Nest management
- Avian reporting system
- Risk assessment methodology

- Mortality reduction measures
- Avian enhancement options
- Quality control
- Public awareness
- Key resources

As originally conceived by APLIC, these principles served as an outline for an effective plan. However, not all APPs need to contain information about all twelve principles, as each document should be specific to an individual utility's operations, site-specific avian issues, and agency collaboration history. The TWE Project is a new project constructed to current APLIC construction recommendations, sited and designed to ameliorate potential avian risk within the constraints of feasibility and the Project purpose and need. There are no elements of the Project involving rebuilding or retrofitting activities. In addition, there is neither history of avian safety issues nor mortality data from which to conduct a risk assessment. In the following sections, background information is provided where appropriate on how each component is relevant to the Project and how it will be implemented. As a "living document," as circumstances change, sections will be added to future revisions of this Plan.

5.0 AVIAN INTERACTIONS AND POTENTIAL ISSUES

Though power lines and associated facilities may provide some benefit to avian species through increased perching, roosting and nesting opportunities, the addition of power line structures with electrical elements also presents the potential risk of direct mortality through electrocutions and collisions. Risk of direct mortality to individual birds and local populations varies with project characteristics as well as a number of natural factors. These include bird size, flight characteristics, behavior, habitat, weather conditions, time of day, and topography. The TWE Project traverses a diverse landscape ranging from flat desert scrub, rolling chaparral, steep mountains, ridgelines, cliffs, large water bodies, streams, wetlands, and forests. In the resulting mosaic of habitats, a rich avian fauna is present with an assortment of resident and seasonally transient species. The potential exists for system elements, avian behavior, and environmental factors to interact in complex ways resulting in varying levels of risk to birds throughout the Project area. As a new project, TransWest considered risks to avian species and sought to enhance their safety through routing, siting, and design decisions. Through this APP, TransWest and agencies can continue to work collaboratively to actively minimize risk and adaptively manage the TWE Project to proactively respond to specific issues that may arise.

5.1 Avian Electrocutions

Avian electrocution may occur because of a combination of biological and electrical design factors (Janss and Ferrer 2001). Biological factors such as habitat, prey, and species, are those that influence avian use of structures. Raptors often use structures for perch-hunting, an energy-saving foraging behavior utilized by many species (APLIC 2006). Raptors and other species will use poles and towers for nesting, especially in open areas or areas where there are few natural nesting locations (Bevanger 1994; APLIC 2006).

Power lines electrocute birds when they simultaneously contact two conductors, or an energized conductor and a ground wire or grounded hardware (Bevanger 1998). Wet feathers raise the risk of electrocution for a bird by increasing conductivity. Wet feathers can conduct dangerous amperages beginning at around 5 kV, whereas dry feathers require currents greater than 70 kV before they will begin conducting current (APLIC 2006).

Body size (wingspan and perching height) and behavior, such as perching and roosting on poles or wires, are the keys to understanding why and how birds become electrocuted. Generally speaking, some species are more prone to mortality from electrocution than from collision, primarily birds of prey and ravens (Bevanger 1998). Because of the greater vertical and horizontal spacing required on higher voltage lines, the majority of raptor electrocutions occur on lines that are energized at voltage levels of 69 kV and below. The risk of electrocution from lines energized above 69 kV is highly unlikely on properly designed and maintained facilities (APLIC 2006). An APLIC avian-safe line has horizontal spacing that has considered the "wrist-to-wrist" wingspan distance for the largest bird species likely to be at risk in the area (APLIC 2006). The TWE Project transmission line is a high voltage transmission line and therefore presents a low avian electrocution risk. Even for the largest avian species present in the Project area (California condor), the proposed vertical and horizontal separation distances between energized components and between energized components and grounded elements exceed APLIC recommendations of the "wrist-to-wrist" measurements.

The overhead ground electrode line will be designed to APLIC recommendations by ensuring that vertical and horizontal separation distances between energized components and between energized components and grounded elements meet or exceed APLIC recommendations of the "wrist-to-wrist" measurements of the largest bird that may occur within the local vicinity of the Project (golden eagles in the north and California condors in the south). The terminals for the TWE Project will also be designed to be avian safe.

Based on the above discussion, avian electrocutions on the TWE Project do not present a significant risk and will not be addressed further in this APP.

5.2 Avian Collisions

Avian collisions with transmission lines may be a major cause of avian mortality. Factors that influence collision risk can be divided into three categories: those related to the biology of the avian species, those related to the environmental conditions, and those related to the configuration and location of transmission lines (APLIC 2012, 2006; Savereno et al. 1996).

5.3 Biological Factors Related to Bird Collisions

Biological factors include body size, flight behavior, age, sex, habitat use, and flocking behavior. These relate to the bird's ability to detect and avoid a power line. Birds that spend an abundance of time in the air may face a greater risk of collision than those that are predominantly ground-based (Bevanger 1994). For example, swallows swarming after insects may be more likely to collide with a power line than grouse (Sporer et al. 2013). A bird's flight manner has been shown to be one of the most important factors determining the chances of collision with a transmission line, perhaps more important than the sheer frequency of birds flying near the lines (Janss 2000). Juvenile birds, which are not as familiar with their surroundings and are less experienced in both flight and landing can be expected to have a greater likelihood of colliding with transmission lines (Bevanger 1994, 1998; Dorin and Spiegel 2005). In general, birds are quick-moving, visual-orienting animals that are very adept at identifying and avoiding obstacles in their flight paths; however, large-bodied birds with low maneuverability and birds that are distracted by specific behaviors (e.g., foraging, flocking, territorial displays, competition, courtship, soaring) tend to be more likely to collide with power lines. In addition, birds that are unfamiliar with an area and its power lines (such as migrants) may be at elevated risk.

5.3.1 Environmental Factors Related to Bird Collisions

Environmental factors influencing collision risk include the effects of weather and time of day; transmission line visibility; surrounding land use practices that may attract birds; and human activities that may flush birds toward transmission lines. Overcast weather and thick fog tends to cause birds to lower their flying altitudes. Likewise, headwinds generally cause birds to fly lower, whereas tailwinds

may cause birds to fly higher (Bevanger 1994; Perdeck and Speek 1984). High winds may cause some species, especially waterfowl, to fly at lower elevations (Hunting 2002). If winds are blowing perpendicular to conductors, this can also increase collision possibility (Hunting 2002). Weather conditions may also make transmission lines more difficult to see, thus increasing the likelihood of a collision (Mathiasson 1992). Visibility can also be affected by the time of day. Additionally, lines become increasingly difficult to see at times with poor lighting, such as night, dawn, or dusk. Hunting (2002) observed increased transmission line strikes occurring at night or during poor weather. Further studies by Stout and Cornwell (1976) also emphasize the risk of power line collision that poor visibility poses to waterfowl.

Wetlands, lakes, and streams all have potential for avian risk if they are located near power lines. Because water is often used by birds for foraging, nesting and roosting activities, adjacent power lines can pose collision risks to birds that utilize these areas (APLIC 2012). Stout and Cornwell (1976) found that in a review of reported non-hunting mortality of wild waterfowl from 1930 to 1964, 65% of collision mortalities were due to telephone and power lines.

Disturbance of birds perched near power lines can pose a risk. If birds are startled into leaving a water body or feeding area adjacent to power lines, the likelihood of a bird flying into the lines increases. Wetlands tend to have a high concentration of birds nesting, feeding, roosting, and shuttling back and forth among use areas, thus adding to the collision risk with nearby transmission lines (Bevanger 1994).

Anthropogenic land use may attract birds into areas that contain transmission lines. For instance, a section of highway may be an attractant to vultures or similar scavenging species because of the presence of road-killed animals. Agriculture activities may attract birds and raptors to certain areas for foraging opportunities. Birds avoiding urban area may be funneled into transmission corridors and be exposed to the risk of collision.

5.3.2 Power Line Factors Related to Bird Collisions

Power line factors that may relate to avian collisions include the type of structures supporting the transmission line and their placement in the landscape. Equipment placed on the structure and the manner that conductors are arranged also influences risk. While it is believed that flat-line configurations are less of an avian risk than vertical configurations (Bevanger 1994), power line structure design has not been sufficiently analyzed to determine a specific correlation with bird collisions (Janss 2000). However, there seems to be a positive correlation between the presence of a static wire and the number of bird collisions (Bevanger 1994; Savereno et al. 1996; APLIC 2012). It is thought that when a bird sees the larger conductor wires, it increases its altitude to avoid them, and subsequently collides with the thinner, less-visible static wire. This has been supported by studies that have demonstrated an average mortality decline of 50 to 60% when markers are placed on static wires in relation to wires left unmarked (Savereno et al. 1996).

Transmission line location may also influence the risk of collision for birds. Generally, there is more of a risk in placing a transmission line corridor in an open area than against an existing obstruction; however, the visual contrast of the conductors against the background is a consideration (Bevanger 1994). The risks to birds flying across a single corridor in an open space become dependent not only on the line's visibility, but on the altitude of the bird and its ability to first see the transmission line wires, and then change its flight pattern to avoid them. On the other hand, lines are grouped with existing lines or against a landscape reference such as tall trees are theoretically easier to avoid. Multiple lines in one corridor allow birds to avoid several sets of lines at once (Bevanger 1994). The perpendicular placement of transmission line corridors relative to avian flyways can increase the risk posed by the lines. There is also a greater risk of collision when lines are in between areas used by birds, such as between foraging and roosting areas (APLIC 2012). The problem is compounded when the areas are close enough that only a short, low level flight is required (Bevanger 1994).

Lines placed near a ridgeline also can create a hazard. When horizontal winds get deflected upward by ridgelines, the resulting updrafts attract raptors that seek to gain elevation for gliding and soaring purposes (Pope et al. 2006). Passes or valleys may act as funnels for migrating birds crossing mountain ranges. River courses are also followed by migrants. Power lines spanning passes, valleys and rivers create a risk of collision.

It is difficult to predict the frequency of collision-caused bird mortality without long term information on bird species activity and both daily and seasonal movements in the Project area. These data are not available for the TWE Project; however, it is generally expected that collision mortality would be greatest where the movements of susceptible species are the greatest (e.g., near open bodies of water, wetlands, nesting habitats, ridgelines). It is possible that birds will strike the new transmission lines, but it is not expected to result in a substantial increase from current conditions. TransWest has also utilized existing transmission corridors to a large extent, including the West-Wide Energy Corridor (WWEC) and corridors identified in various BLM Resource Management Plans. By placing the Project in existing transmission corridors, collision-related impacts will be reduced.

6.0 CONSTRUCTION DESIGN STANDARDS

All aspects of the Project were designed to meet APLIC construction recommendations both in the State of the Art, 2006 and Reducing Avian Collisions, 2012 documents. No further action is directed in this APP. Attachment D, Design Standards includes the design specifications for the Project.

For areas TransWest identifies as posing a high-risk for avian collisions (e.g., near open bodies of water, wetlands, nesting habitats, ridgelines) or in areas of high collision mortality identified through post-construction reporting, TransWest may install flight diverters or line markers as appropriate. Preferred flight diverters and markers are shown in the attached Exhibit D, Design Standards.

7.0 TRAINING / MONITORING, DEVELOP TRAINING MATERIALS

TransWest supervisors, construction crews, linemen, environmental contractors, and any other transmission-related field personnel will undergo avian protection awareness training prior to beginning work on the TWE Project. Ensuring that Project personnel are knowledgeable and aware of the protocols and methods outlined in this APP will decrease the likelihood of avian interactions with the transmission line and increase the likelihood of quick and efficient responses to incidents. Personnel will undergo a Worker Environmental Awareness Program (WEAP) that places emphasis on TransWest's avian protection policy. Also addressed are any ongoing Project permits that may be issued for avian protection; special-status avian species that could occur and where they would be most likely to occur. Workers will be instructed in how to identify these species; their natural histories where relevant to areas of probable occurrence; and what steps to take should an avian injury or mortality occur. Training will also include a discussion of the law and the consequences for non-compliance with this APP and/or with applicable permits or regulations. All new transmission-related personnel will be required to undergo WEAP training prior to conducting any construction or O&M work on any TWE Project components. As part of the WEAP training all workers will be instructed on the proper protocol for contacting the APP Program Coordinator for any assistance in circumstances of uncertainty. For a more explicit discussion of how newly discovered nests or avian incidents will be reported, see Section 9.0 Nest Management, and Section 10.0 Adaptive Management.

Summary

- All TransWest supervisors, construction crews, linemen, environmental contractors, and any other transmission-related field personnel will undergo an avian protection awareness training prior to beginning work on the Project.
- All TransWest on-site personnel will undergo WEAP training with emphasis on avian protection prior to the start of construction.
- All new contractors will undergo WEAP training before they begin work.

8.0 AREAS OF RESPONSIBILITY AND PERMIT COMPLIANCE

The APP will be administered by designated TransWest staff members under the direction of the APP Program Coordinator. A list of additional responsible persons, chain of responsibility, and contact information will be established prior to project construction and appended to this APP.

TransWest management tasks all line crews, field engineers, operators, foremen, and design personnel with understanding this plan and complying with its direction.

Currently, TransWest does not possess federal or state permits pertaining to migratory birds, eagles or federal ESA listed avian species. It is not authorized to capture injured birds, remove inactive eagle or colonial bird nests, disturb active nests of any bird species, or remove or store carcasses. Any such activity will be conducted by the USFWS or under their direct supervision. This APP will be modified if TransWest obtains a permit in the future.

Should it be warranted in the future, TransWest may apply for federal or state permits. The following permits are described to inform the APP Program Coordinator in making decisions regarding future permits. It does not imply that TransWest possesses these permits or may conduct any covered action described below.

- **Incidental Take Permits** – Incidental take permits are issued to allow the unintentional take of specified individuals per the conditions within each permit.
    - **Section 7 Incidental Take Statement** – None of the federally listed avian species known to be in the Project area are at an elevated risk for collision or mortality. Because of the voltage of TransWest transmission lines and the large separation distance that will be required, electrocution is highly unlikely.
    - **Bald and Golden Eagle Act Permit** – Based on known occurrences and activities in the vicinity of the Project area, both species could occur in various locations along the Project route. Should any eagle electrocution or collision incidents occur during construction or should an eagle nest be discovered that will be impacted by construction, TransWest construction crews will carry out measures described in Section 9.0, Nest Management, and Section 10.0, Adaptive Management, and immediately notify the APP Program Coordinator.
- **Collection/Salvage Permits** – These permits are required to collect, salvage, or handle birds.
    - **State Scientific Collecting Permit** – These permits are issued by state resource agencies and allow the collection, salvage, or capture and release of special-status species as allowed by the individual permit conditions. TransWest will seek this permit from the appropriate state agencies if any of these actions is required during Project construction.

- **Federal Migratory Bird Permit** – These permits are issued by the USFWS under the MBTA and may be required if it is necessary to salvage and/or rehabilitate birds protected by the MBTA during construction. Fish and Game Code 3513 also prohibits the take or possession of any migratory nongame bird protected by the MBTA, except where allowed by the Secretary of the Interior.

- **Nest Removal and Relocation Permits** – Bird nests are protected by the MBTA and by the Fish and Game Code. Under the MBTA, it is illegal to possess, sell, purchase, barter, transport, import, export, or take—defined as collecting, for nests—or attempt any of those actions on a migratory bird nest (USFWS 2003). Under Fish and Game Code Sections 3503 and 3503.5, it is illegal to take, possess, or needlessly destroy the nest or eggs of any bird, except as otherwise provided by the Fish and Game Code or pursuant regulations. However, it is lawful to remove inactive nests or nests during the non-breeding season for most birds, excepting those of eagles. When it is necessary to remove a protected nest as dictated by the MBTA and Fish and Game Code, TransWest will seek permits from the USFWS prior to taking any further actions other than those described under Section 9.0, Nest Management.

9.0 NEST MANAGEMENT

Nest management addresses both nests that may be constructed on facilities and nests near facilities that may be affected by construction or O&M activities. Under the MBTA, it is illegal to possess, sell, purchase, barter, transport, import, export, or take—defined as collecting, for nests—or attempt any of those actions on a migratory bird nest (USFWS 2003). In order to comply with these regulations, the various best management practices (BMPs) and protocols that will be utilized by TWE Project staff to avoid and minimize impacts to nesting avian species on structures or in the Project ROW are discussed below. Additionally, all BLM and U.S. Forest Service (USFS) spatial and timing stipulations regarding nesting birds will be followed as set forth in the right-of-way grants and special use authorizations for the TWE Project. TransWest recognizes that it may be difficult at times to determine whether a nest is active or inactive, and that even checking on the status of a nest may result in disturbance. If in doubt, O&M personnel will contact the APP Program Coordinator who will have the nest checked by a qualified biologist as appropriate.

9.1 Definition of an Active Nest

Nests of native bird species are protected by the MBTA. The USFWS has clarified that the federal regulations only pertain to active nests except in the cases of listed species and eagle nests, which are protected under the Endangered Species Act and the Bald and Golden Eagle Protection Act, respectively, whether they are active or inactive. Regarding all other bird species however, the MBTA does not clearly define what an active nest is. This being the case, it is left to qualified biologists to determine what constitutes an active nest. For the TWE Project, a nest will be considered active when construction of a new nest or use of an existing nest commences, and its formal status will remain active as long as adults, viable eggs, and/or living young are present at the nest. A nest may be abandoned, fail, or fledge young and become inactive during the breeding season. Prior to removal of the buffer around an inactive nest, a qualified biologist will confirm that the nest is inactive using appropriate survey methods.

A number of species will utilize existing nests built in prior years. These include owls (Strigiformes) and diurnal raptors such as falcons, hawks, vultures, and eagles (Falconiformes). Because known nesting sites are likely to be utilized in the current year, each existing nest suitable for use by owls and diurnal raptors should be considered active when the designated seasonal avoidance period begins. Its formal status should remain active until such time as a qualified biologist determines the nest is inactive.

9.2 Inactive Nests

Inactive nests may be removed and/or destroyed in compliance with the MBTA, unless they are nests of listed species or eagles as discussed above. In most cases, a previously active nest becomes inactive when it no longer contains viable eggs or young and is not being used by a bird as part of the reproductive cycle. According to the Migratory Bird Permit Memorandum regarding nest destruction, "the MBTA does not contain any prohibition that applies to the destruction of a bird nest alone (without birds or eggs), provided that no possession occurs during the destruction" (USFWS 2003).

Nests known to be used by ESA-listed species or bald or golden eagles will not be removed unless coordination with state or federal agencies has deemed it appropriate to remove them. Active nests will be protected through establishment of buffers determined by BLM and USFS and set forth in the right-of-way grants and special use authorizations for the TWE Project.

9.3 Operations and Maintenance Procedures

In order to properly assess and document any potential nesting issues, O&M activities occurring during the avian breeding season, generally from mid-February through late-July, will be subdivided into activities that strictly involve work on overhead structures and activities on the ground that involve ROW vegetation management. For activities strictly occurring on towers and other overhead structures, linemen and O&M personnel will conduct visual surveys of the maintenance area prior to beginning work to determine whether any bird nest are present in the work area. For activities involving ROW vegetation management, a qualified biologist would conduct a nesting bird survey not more than 14 days prior to the O&M activities to determine if active nests of any bird species are present within the work area. All active bird nests that are encountered are to be documented using the nest reporting form (Attachment B). All construction and O&M work that might disturb an active nest is to be halted immediately and the APP Program Coordinator contacted. The APP Program Coordinator will develop a treatment plan that will protect the active nest or contact the USFWS for guidance.

TransWest will comply with all federal and state laws regarding nest management or removal. Removal of an inactive, non-eagle nest outside the breeding season may be conducted for safety or maintenance issues without a take permit. When in doubt about the status of a nest (or type) field engineers will consult with the managing engineer who may seek a professional opinion from the APP Program Coordinator or an agency. Active problem nests will be addressed on a case-by-case basis and in coordination with the USFWS and appropriate state agencies.

While inactive bird nests—those without birds or eggs—are not protected from destruction by the MBTA, some inactive nests are protected by other regulations, including those of ESA-listed species or of bald and golden eagles. Nests of eagles cannot be altered, moved, or destroyed without specific authorization from the applicable agency (APLIC 2006). Recent legislation changes in 2009 allow take of eagle nests when there is a safety concern to people or eagles, when it is a public health and safety concern, when the nest prevents use of a human-engineered structure, or when the activity or its mitigation will have a net benefit to eagles; only inactive nests can be taken except in safety emergencies (50 Code of Federal Regulations [CFR] Part 22.27). However, permits are still required for nest removal and ground crews must notify the APP Program Coordinator if a problem nest is discovered. Therefore, determining the active or inactive status of a nest in the vicinity of planned work is paramount to protecting the birds that may be occupying it and protecting the Project by ensuring smooth and avian-safe construction.

If there is question as to whether an observed nest is active or inactive, the APP Program Coordinator and the appropriate land management agency are to be consulted for assistance. Under no circumstances is an active nest to be disturbed until the APP Program Coordinator has been notified and applicable permits and/or resource agencies have been consulted for further action. The nest

reporting form must be completed for all active nests. Construction may only proceed within an established distance of an active nest after the nest has been determined to be inactive or after approval has been given by the APP Program Coordinator or the applicable regulatory agency.

Should a nesting bald eagle be encountered prior to work, the USFWS has issued recommendations for avoiding or minimizing disturbance to the nest and its inhabitants (USFWS 2007). If the construction will be visible from the nest, the USFWS recommends a buffer of 660 feet if there is no similar activity occurring within one mile of the nest; if a similar activity is occurring within one mile of the nest, the USFWS recommends a construction buffer of 660 feet or as close as the other activity is allowed. Landscape buffers are recommended as available. If construction is not visible from the nest, the USFWS recommends a buffer of 330 feet from the nest if there is no similar activity within one mile of the nest; if a similar activity is occurring within mile of the nest, the USFWS recommends a construction buffer of 330 feet or as close as the other activity is allowed. All clearing, external construction, and landscaping between 330 and 660 feet of the nest should be conducted outside of the breeding season. In the DEIS and relevant Resource Management Plans, BLM has broadly identified the spatial buffers surrounding bald eagle nests at one mile on BLM managed lands. The USFWS recommends that the temporary use of loud machinery be restricted to outside of the breeding season. While the breeding season for bald eagles can range from January through August, the most critical time periods when bald eagles are most sensitive to disturbance—courtship, nest building, egg-laying, and incubation—are generally from January through May (USFWS 2007).

For active golden eagle nests, the USFWS recommends a spatial buffer in non-urban areas of 0.5 miles (USFWS 2008). In the DEIS and relevant Resource Management Plans, BLM has broadly identified the spatial buffers surrounding golden eagle nests at one mile on BLM managed lands. Similar to the measures for bald eagle, it is recommended that use of loud machinery as well as all clearing, external construction, and landscaping within the spatial buffers for golden eagle nests should be conducted outside of the golden eagle breeding season.

9.4 Problem Nests

Many birds build nests on power poles. Nests that do not pose safety, reliability, outage, or bird electrocution risks will be left undisturbed. Nests that may present safety, reliability, outage, or bird electrocution risks are referred to as “problem nests”. Managing problem nests involves several components:

- Discouraging birds from nesting in problem areas
- Providing an alternative nest site
- Ensuring that surrounding utility facilities are avian-safe

Problem nests may be removed or relocated if inactive unless it is an ESA-listed species or a bald or golden eagle nest. If active, an ESA-listed species, or a bald or golden eagle nest then the APP Program Coordinator must be contacted before any further action is taken. If a problem with a specific nest is anticipated in the future, permit requirements may be minimized by taking appropriate action during the non-breeding season before the nest is active.

Summary

- If O&M efforts such as repairs, equipment replacement or routine vegetation removal are to occur during the avian breeding season, generally from mid-February through late-July, line maintenance crews will conduct a nesting bird survey prior to construction on above ground structures to determine if active nests of any bird species are present within the work area. If any ROW vegetation management will occur, a qualified biologist will conduct a nest survey no more than 14 days prior to work. All active bird nests that are encountered are to be documented using the nest reporting form (Attachment B).

- If an active nest is present, then all construction and O&M work that might disturb the nest is to be halted immediately and the APP Program Coordinator contacted. The APP Program Coordinator will develop a treatment plan that will protect the active nest or contact the USFWS for guidance. Any active bald eagle nest will be given a 660-foot buffer if maintenance activity is visible from the nest or a 330-foot buffer if it is not, active golden eagle nests will be given a 0.5 mile buffer, and both eagle species will be given a one mile buffer on BLM managed lands (or less as directed or approved by BLM staff).
- All active nests will be documented with the attached Avian Nest Reporting Form (Attachment B).
- Active nests of any species protected under the MBTA, active or inactive eagle nests, or active nests of ESA listed species are not to be moved without approval from the APP Program Coordinator, who will first consult with the USFWS. When in doubt about the status of a nest (or type) field engineers will consult with the managing engineer who may seek professional opinion from the APP Program Coordinator or an agency. Active problem nests will be addressed on a case-by-case basis and in coordination with the USFWS and appropriate state agencies.
- Inactive nests of common species (i.e. non-eagles and non-ESA listed species) can be removed where they are in the path of the work.

10.0 ADAPTIVE MANAGEMENT

As stated previously, this APP will be a living document that will be revised and updated as goals are achieved, innovative solutions are developed to mitigate impacts, agency guidance is adjusted, and conditions of the TWE Project warrant. As such, TransWest will utilize an adaptive management approach to address issues with the Project as they arise. Through this process, TransWest will better be able to identify potential risk and avoid and minimize impacts to avian species. Set out below are examples of some areas where adaptive management will serve to benefit avian species as well as the TWE Project.

10.1 Retrofit/ Remedial Protective Measures

The TWE Project is a new build transmission line that will be built to APLIC construction recommendations, which eliminates the need for retrofit devices and remedial protection. However, if an area is identified where avian species are being impacted by the transmission line, the issue will be investigated, identified and corrected through the use of retrofit devices or other accepted protective measures which will again reduce the potential risk to avian species. General types of equipment that may be used for these situations include covers for hardware and conductors; perching dissuaders; flight path diverters; line marking devices; and other similar types of equipment. TransWest has preemptively considered and approved the use of a few market available products; specifications for these products are located in Attachment D, Design Standards. Records will be kept of the nature of any problems requiring avian protection equipment, bird species involved, site conditions, materials, performance characteristics of equipment and lifespan. The records will be reviewed on a semiannual basis by the APP Program Coordinator to ascertain patterns or developing conditions.

The APP will be reviewed annually and updated as needed based on field data on retrofitted equipment and monitoring of any system changes to improve avian safety. The overarching goal of the APP is to be a living document that will strive to protect avian species by reducing the potential risk created by the Project.

10.2 Incident Tracking

Avian incidents and mortalities will be documented during all phases of the TWE Project by supervisors, construction crews, linemen, environmental contractors, O&M personnel, and any other transmission-related field personnel. Personnel will undergo avian protection awareness training prior to beginning work on the TWE Project that will include recognition and effective documentation of observed avian issues and mortalities. All avian injuries or mortalities that are a result of collision or electrocution with the transmission lines or other Project components are to be documented and reported to the APP Program Coordinator. Following initial notification, the employee or contractor is to fill out the avian reports included as Attachment C. Avian incidents will also be recorded into a Geographic Information Systems (GIS) database for tracking purposes and to determine particular repeat problem areas.

If the affected bird is a special-status species or if it is discovered that a particular area or stretch of transmission line is a "hot spot" for avian safety issues, TransWest will investigate remedial measures to alleviate the issue, as discussed in Section 9.1.

TransWest will maintain an annual list of avian mortalities, including dates, locations, and the species involved, as well as a list of remedial measures implemented (e.g., retrofitting, avian safety devices installed), a shape file or map of the annual avian incident data, and an itemized breakdown of the annual cost of implementing this APP. This information will be internally maintained for use in any future permitting action or enforcement action.

TransWest management and the APP Program Coordinator will review the annual list of avian mortalities and the annual report for compliance with this APP and to insure that adequate measures are being taken to avoid and minimize risks to birds. Where areas of substantial concern are identified through the internal reporting described above, mortality surveys may be conducted to identify the location and scope of the problem, which will then inform the adaptive management process and result in the correction of aspects of the TWE Project that may be causing impacts to avian species. The adaptive management process will utilize the best available information, methods, and analysis techniques implemented by the utility industry. Currently the APLIC *Reducing Avian Collisions*, 2012 document provides up-to-date survey and data collection methods, as well as analysis information.

11.0 EXPENDITURE TRACKING

To determine the amount of investment being expending on measures set out in Section C9.0, TransWest will track its expenses in order to inform the agencies (e.g., USFWS) of these costs. Cost capture is a mechanism agencies use to track efforts utilities expend to improve and sustain avian safety of their systems. As a new project, no data exist to meaningfully prepare a scope and budget for mortality reduction measures. Within one year of commencement of Project operations, TransWest will establish an annual budget and cost tracking mechanism for remedial actions (purchase and installation of avian protection equipment), training, and other activities such as attendance of avian protection workshops.

Examples of potential work that will be tracked in the APP reporting system include the following:

1) Modification of poles associated with a raptor mortality

2) Installation of bird flight diverters/markers to prevent bird collisions

3) Proactive installation of bird guards to prevent squirrel/bird outages

4) Proactive modification of existing poles considered to have a high risk of electrocution.

12.0 QUALITY CONTROL

TransWest will implement quality control measures to ensure that this APP is accurate, up-to-date, and used effectively during the long-term operation of the Project. These measures will include the following:

- TransWest line crews, field engineers, operators, foremen, design personnel, and all contractors associated with the Project, are tasked with understanding and complying with this Plan.
- Quality control will be overseen by the APP Program Coordinator who will provide quarterly reports to TransWest's General Management.
- The APP Program Coordinator will review submitted nest reporting forms and avian incident reporting forms and ensure that they are properly and adequately completed. Any missing information will be obtained from the worker who completed the form. The APP Program Coordinator will ensure that a local (TransWest) incident database is kept up-to-date. Any problems with the reporting system will be reported to management for review and remedial action will be taken.
- Any transmission towers or sections of conductor that are retrofitted with avian safety measures as described under Section 10.0 Adaptive Management, will be monitored for effectiveness by checking for injured birds, carcasses, or signs of potentially risky nest-building weekly for the first month after the retrofitting. Any observed incidents of additional nesting, injury, or mortality will be investigated for further remedial actions, which will then be determined and implemented.
- TransWest will keep an internal database which tracks detected avian injuries or mortalities, a list of retrofitting operations over the last year, a shape file or map of the last year's avian incident data, and an itemized list of the operating costs associated with implementing the protective measures in this APP. TransWest management and the APP Program Coordinator will discuss and implement any necessary changes to this APP or avian protection methods based on this annual report.

13.0 LITERATURE CITED

Avian Power Line Interaction Committee (APLIC). 2005. *Avian Protection Plan (APP) Guidelines*. APLIC and the US Fish and Wildlife Service.

_____. 2006. *Suggested Practices for Avian Protection on Power Lines: The State of the Art in 2006*. Edison Electric Institute, APLIC, and the California Energy Commission. Washington, D.C. and Sacramento, CA.

_____. 2012. *Mitigating Bird Collisions with Power Lines: The State of the Art in 2012*. Edison Electric Institute, APLIC, and the California Energy Commission. Washington, D.C. and Sacramento, CA.

Bevanger, K. 1994. *Bird interactions with utility structures: collision and electrocution, causes and mitigating measures*. Ibis 136: 412-425.

_____. 1998. *Biological and conservation aspects of birds mortality caused by electricity power lines: a review*. Biological Conservation 86: 67-76.

Dorin, M. and L. Spiegel. 2005. *Assessment of Avian Mortality from Collisions and Electrocutions. California Energy Commission*. CEC-700-2005-015.

Hunting, K. 2002. *A Roadmap for PIER Research on Avian Collisions with Power Lines in California*. California Energy Commission. P500-02-071F.

Janss, G.F.E. 2000. *Avian mortality from power lines: a morphologic approach of a species-specific mortality.* Biological Conservation 95: 353-359.

Janss, G.F.E. and M. Ferrer. 2001. *Avian electrocution mortality in relation to pole design and adjacent habitat in Spain.* Bird Conservation International 11: 3-12.

Mathiasson, S. 1992. *Mute Swans, Cygnus olor, Killed from Collision with Electrical Wires, a Study of Two Situations in Sweden*. Environmental Pollution 80: 239-246.

Perdeck, A.C. and G. Speek. 1984. *A Radar Study on the Influence of Expected Ground Speed, Cloudiness and Temperature on Diurnal Migration Intensity*. Ardea 72: 189-198.

Pope, V.R., P.C. Fielder, K.A. Cordell, R.E. Harness, and T.E. Hamer. 2006. *Pre-construction Evaluation of Collision Potential for Fall Migrating Raptors with a Transmission Line across Burch Mountain, Chelan County, Washington.*

Savereno, A.J., L.A. Savereno, R. Boettcher, and S.M. Haig. 1996. *Avian Behavior and Mortality at Power Lines in Coastal South Carolina*. Wildlife Society Bulletin 24(4): 636-648.

Sporer, M.K., J.F. Dwyer, B.D. Gerber, R.E. Harness, and A.K. Pandey. *Marking Power Lines to Reduce Avian Collisions Near the Audubon National Wildlife Refuge, North Dakota.* Wildlife Society Bulletin 37(4): 796-804.

Stout, I.J. and G.W. Cornwell. 1976. *Nonhunting Mortality of Fledged North American Waterfowl.* The Journal of Wildlife Management 40(4): 681-693.

United States Department of the Interior, Fish and Wildlife Service (USFWS). 2003. MBPM-2. Migratory Bird Permit Memorandum. Online. Available at: http://www.fws.gov/policy/m0208.pdf

_____. 2007. National Bald Eagle Management Guidelines. US Fish and Wildlife Service. May 2007. Online. Available at: http://www.fws.gov/pacific/eagle/NationalBaldEagleManagementGuidelines.pdf

_____. 2008. Guidelines for Raptor Conservation in the Western United States. US Fish and Wildlife Service. February 2008. Online. Available at: http://www.blm.gov/pgdata/etc/medialib/blm/ut/lands_and_minerals/oil_and_gas/february_20120.Par.52166.File.dat/FWSRaptorGuidelines.pdf.

_____. 2012. Migratory Bird Flyways. June 2012. Online. Available at: http://www.fws.gov/migratorybirds/flyways.html

ATTACHMENT A
SPECIAL STATUS AVIAN SPECIES

TABLE A1 POTENTIAL SPECIAL STATUS AVIAN SPECIES IN TWE PROJECT AREA

COMMON NAME	SCIENTIFIC NAME	STATUS[1]	RANGE AND HABITAT REQUIREMENTS	NESTING STRUCTURE	POTENTIAL FOR OCCURRENCE2
American white pelican	*Pelecanus erythrorhynchos*	BLM; UT-SS Tier II	Range: The American white pelican breeds in widely distributed island colonies from Canada to northeastern California, Utah, Nevada, Wyoming, and Colorado. Habitat: The species breeds on islands in large bodies of water. It forages in marshes, lakes, and rivers. It constructs a scrape nest on flat, open ground, near water. It is a colonial nester.	Wetlands: ground nester	Regions I and II: High. The species has been documented within the 2-mile transmission line corridor in Millard County, Utah. It has also been documented within 5 miles of the reference line in Iron, Juab, Millard, Sevier, Uintah, and Washington counties, Utah. No suitable habitat for the American white pelican is crossed by the project alternatives in Region III. A breeding colony has been documented within 5 miles of the reference line in Carbon County, Wyoming.
Least bittern	*Ixobrychus exilis*	BLM; NV-P	Range: The least bittern nests throughout the eastern United States and in select areas of Oregon, California, Colorado, Arizona, New Mexico, Texas, Utah, Nebraska, Nevada, Mexico, and South America. Habitat: The species breeds and forages in freshwater marshes. It nests on a platform of marsh vegetation with a canopy.	Wetlands: ground nester	Regions I, III, and IV: Moderate. The species has been documented within 5 miles of the reference line in Clark County, Nevada. Probable breeding records exist for the Pahranagat National Wildlife Refuge in Lincoln County, Nevada.
White-faced ibis	*Plegadis chihi*	BLM	Range: The white-faced ibis nests from central Mexico to coastal Texas and Louisiana and through the Great Basin. Isolated colonies exist in Alberta, New Mexico, California, Montana, North Dakota, Iowa, Kansas, and South America. Habitat: The species breeds in tall emergent vegetation growing as “islands”, surrounded by water (at least 18 inches deep). It forages in wet hay meadows and flooded agricultural croplands, marshes, shallow ponds, lakes, and reservoirs. It constructs a nest of emergent vegetation in bulrushes, cattails, or reeds; on floating mats; or in low trees.	Wetlands: ground nester	Regions I, II, III, and IV: High. The species has been documented within the 2-mile transmission line corridor in Carbon County, Wyoming. It has also been documented within 5 miles of the reference line in Sweetwater County, Wyoming. Possible breeding colonies exist in northwestern Colorado and in Clark County, Nevada.

COMMON NAME	SCIENTIFIC NAME	STATUS[1]	RANGE AND HABITAT REQUIREMENTS	NESTING STRUCTURE	POTENTIAL FOR OCCURRENCE2
Barrow's goldeneye	*Bucephala islandica*	BLM	Range: The Barrow's goldeneye breeds in the western mountains of North America, from Alaska to central California. Habitat: The species breeds near densely vegetated water bodies with abundant aquatic vegetation. It forages in water bodies. It nests in cavities, usually in dead trees close to cold-water lakes, pools, or rivers. The species exhibits high nest fidelity.	Wetlands: cavities	Region I: Low. The species is a confirmed breeder in Sweetwater and Carbon counties, Wyoming.
Trumpeter swan	*Cygnus buccinator*	BLM	Range: The trumpeter swan was once distributed across most of North America and currently occurs locally from Alaska south to Oregon and east to Michigan. Habitat: The species breeds in areas with stable, quiet, and shallow waters where small islands, muskrat houses, or dense emergent vegetation provide nesting and loafing habitat. It forages in shallow marshes, ponds, lakes, and river oxbows with nutrient-rich waters, and dense aquatic plants and invertebrates. It constructs a nest of aquatic and emergent vegetation, often on a muskrat house surrounded by water.	Wetlands: ground nester	Region I: High. The species has been documented within the 2-mile transmission line corridor in Sweetwater County, Wyoming.
Bald eagle	*Haliaeetus leucocephalus*	BLM; USFS; CO-ST; UT-SS Tier I; NV-P	Range: The bald eagle occurs throughout the United States and Canada, south into central Mexico. Habitat: The species breeds near large lakes and rivers, in forested habitat where adequate prey and large, old cottonwood or conifer trees are available for nesting. It constructs a large stick nest, and exhibits high nest fidelity.	Raptor: trees	Regions I, II, III, and IV: High. This species has been documented throughout Wyoming, Colorado, Utah, and Nevada. Bald eagles nest and winter along major waterbodies in mature riparian woodlands.

COMMON NAME	SCIENTIFIC NAME	STATUS[1]	RANGE AND HABITAT REQUIREMENTS	NESTING STRUCTURE	POTENTIAL FOR OCCURRENCE2
Ferruginous hawk	*Buteo regalis*	BLM; UT-SS Tier II; NV-P	Range: The ferruginous hawk occurs in Canada, eighteen western and central states, and Mexico. Habitat: The species breeds in semiarid open country, primarily grasslands, basin prairie shrublands, and badlands, typically near prairie dog colonies. It requires large tracts of relatively undisturbed rangeland for foraging habitat. It constructs a large stick nest on rock outcrops, knolls, cutbanks, cliff ledges, or trees, and exhibits high nest fidelity.	Raptor: cliffs/trees	Regions I, II, III, and IV: High. The species has been documented within the 2-mile transmission line corridor in Carbon and Sweetwater counties, Wyoming; in Beaver, Duchesne, Emery, Grand, Iron, Juab, Millard, Uintah, and Washington counties, Utah; and in Lincoln County, Nevada. Suitable habitat also occurs within the study area in Clark County, Nevada.
Golden eagle	*Aquila chrysaetos*	BLM	Range: The golden eagle occurs throughout North America, from Alaska to central Mexico. Habitat: The species breeds and forages in a variety of habitats, including large expanses of grasslands, sagebrush, agricultural lands, and tundra. It constructs a large stick nest on cliffs and in large trees, and exhibits high nest fidelity.	Raptor: cliffs/trees	Regions I, II, III, and IV: High. The species has been documented within the 2-mile transmission line corridor in Carbon and Sweetwater counties, Wyoming, and in White Pine and Lincoln counties, Nevada. Suitable habitat also occurs within the 2-mile transmission line corridor in Colorado, Utah, and Nevada.
Northern goshawk	*Accipiter gentilis*	BLM; USFS; UT-SS Tier I; NV-P	Range: The northern goshawk occurs in Alaska, Canada, and south through the southern Rocky Mountains and Mexico. Habitat: The species breeds and forages in mixed coniferous forest and mature aspen stands with tall trees, intermediate canopy coverage for nesting, and small open areas for foraging. It constructs a stick and twig nest on a large horizontal limb, usually against or near the truck.	Raptor: trees	Regions I and II: High. The species is known to occur within the 2-mile transmission line corridor in Sweetwater County, Wyoming and in Emery and Millard counties, Utah. It has also been documented within 5 miles of the reference line in Carbon County, Wyoming; Garfield and Rio Blanco counties, Colorado; in Daggett, Duchesne, Emery, Millard, Sanpete, Sevier, Uintah, Utah, and Wasatch counties, Utah; and in Lincoln County, Nevada. No suitable habitat for the northern goshawk is crossed by the project alternatives in Region III.
Peregrine falcon	*Falco peregrinus*	BLM; USFS; NV-P	Range: The peregrine falcon occurs throughout most of North America. Habitat: The species breeds and forages in a	Raptor: cliffs	Regions I, II, III, and IV: High. The species has been documented within the 2-mile transmission line corridor in Sweetwater County, Wyoming, Uintah

COMMON NAME	SCIENTIFIC NAME	STATUS[1]	RANGE AND HABITAT REQUIREMENTS	NESTING STRUCTURE	POTENTIAL FOR OCCURRENCE2
			variety of open habitats, including woodlands, forests, shrub-steppe, grasslands, marshes, and riparian habitats. It nests on cliffs and rarely on tall buildings near habitats with abundant prey. It constructs a well-rounded scrape nest of accumulated debris on a ledge.		County, Utah, and Clark County, Nevada. It has also been documented within 5 miles of the reference line in Carbon County, Wyoming, and in Utah (Daggett, Duchesne, Emery, Sevier, and Washington counties).
Prairie falcon	*Falco mexicanus*	BLM	Range: The prairie falcon occurs throughout western North America from Canada to Mexico. Habitat: The species breeds and forages in open terrain, including sagebrush, grasslands, and other arid habitats. It nests on cliff ledges facing open habitat.	Raptor: cliffs	Regions I, II, III, and IV: High. Potential habitat for this species occurs in the 2-mile transmission line corridor. It has been documented within 5 miles of the 2-mile transmission line corridor in Lincoln County, Nevada, and in Colorado.
Swainson's hawk	*Buteo swainsoni*	BLM	Range: The Swainson's hawk breeds in western North America, from Alaska south into northern Mexico, and east to Oklahoma and Iowa. The species range includes Wyoming, Colorado, Utah, and Nevada. Habitat: The species breeds and forages in arid grasslands, desert, and agricultural areas with scattered trees and shrubs. It constructs a modest nest in trees and exhibits moderate nest fidelity.	Raptor: trees	Regions I, II, III, and IV: High. The species has been documented within the 2-mile transmission line corridor in Utah. Suitable habitat is present along the 2-mile transmission line corridor in Wyoming, Colorado, Utah, and Nevada.
Columbian sharp-tailed grouse	*Tympanuchus phasianellus columbianus*	BLM; USFS; UT-SS Tier II	Range: The Columbian sharp-tailed grouse occurs locally from Canada, south to Nevada and east to Colorado. It has been extirpated from Oregon, California, and Nevada. Habitat: The subspecies inhabits mountain-foothill shrub communities, sagebrush, grassland, and riparian habitats. Leks are located in flat areas with low, sparse vegetation. Nests occur within 0.6 mile of the lek area.	Shrublands: ground nester	Regions I and II: Low. The subspecies occurs in suitable habitat in isolated locations in south-central Wyoming, and northwestern Colorado.

COMMON NAME	SCIENTIFIC NAME	STATUS[1]	RANGE AND HABITAT REQUIREMENTS	NESTING STRUCTURE	POTENTIAL FOR OCCURRENCE2
Greater sage-grouse	*Centrocercus urophasianus*	FC; BLM; USFS; UT-SS Tier II;	Range: The greater sage-grouse is found throughout the western United States. Habitat: The species breeds and forages in sagebrush grasslands. Leks are located in open areas (e.g., ridges, knolls, dry lake beds, burned areas) in close proximity to taller sagebrush which is used as escape cover. Most nests are located under sagebrush plants, typically within 4 miles of the lek. Brooding habitat consists of grassy areas near sagebrush. Winter habitat consists of south and east facing slopes with minimal snow cover.	Shrublands: ground nester	Regions I, II, and III: High. Active leks occur within the 2-mile transmission line corridor in Wyoming, Colorado, and Utah. Suitable nesting, brooding, and wintering habitat also occurs within the 2-mile transmission line corridor in these states. The 2-mile transmission line corridor includes greater sage-grouse core habitat areas in Wyoming.
Black tern	*Chlidonias niger*	BLM	Range: The black tern occurs locally in Canada and the northern two-thirds of the United States. Habitat: The species breeds in large marshes, usually greater than 50 acres and forages in marshes and aquatic areas. It nests in small, loose colonies, in still water. It constructs a floating nest of dead rushes in marshes, or on grass tufts in wetlands	Wetlands: ground nester	Regions I and II: High. Breeding colonies of this species have been documented within the 2-mile transmission line corridor in Carbon County, Wyoming and within 5 miles of the 2-mile transmission line corridor in Sweetwater County, Wyoming. The species has been documented within 5 miles of the reference line in Uintah County, Utah. Suitable habitat occurs at Pelican Lake, and on sandbars in the Green River, Utah.
Long-billed curlew	*Numenius americanus*	BLM; UT-SS Tier II	Range: The long-billed curlew occurs from southern Canada into most of the western United States. Habitat: The species breeds and forages in a variety of grassland habitats, including moist meadow grasslands, agricultural areas, and dry prairie uplands, usually near water. It nests in grass less than 12 inches tall, with bare ground, shade, abundant invertebrate prey.	Grasslands: ground nester	Regions I, II, and III: High. This species has been documented within the 2-mile transmission line corridor in Carbon County, Wyoming and Juab, Millard, and Uintah counties, Utah. It has also been documented within 5 miles of the reference line in Beaver, Grand, and Iron counties, Utah.

COMMON NAME	SCIENTIFIC NAME	STATUS[1]	RANGE AND HABITAT REQUIREMENTS	NESTING STRUCTURE	POTENTIAL FOR OCCURRENCE2
Mountain plover	*Chardrius montanus*	BLM; USFS; UT-SS;	Range: The mountain plover occurs in dry short-grass prairies from south-central Canada to Texas. Habitat: The species breeds and forages in flat, short-grass prairie habitat and fallow agricultural fields with sparse vegetation. It constructs a ground nest of cow manure chips, grass, and roots.	Grasslands: ground nester	Regions I and II: High. The species has been documented within the 2-mile transmission line corridor in Carbon and Sweetwater counties, Wyoming. It has been documented within 5 miles of the reference line in Grand County, Utah. Historic records also exist for mountain plovers in Duchesne and Uintah counties, Utah.
Yellow-billed cuckoo (western)	*Coccyzus americanus*	FC; BLM;UT-SS Tier I; NV-P	Range: The western yellow-billed cuckoo occurs west of the continental divide in North America. Habitat: The species breeds and forages in dense woodlands along riparian corridors in otherwise arid areas. It requires a multi-storied canopy, and dense, shrubby vegetation, adequate invertebrate prey, cover, and water. It constructs twig nests, in shrubs.	Wetlands: trees	Regions I, II, III, and IV: High. The species has been documented within the 2-mile transmission line corridor in Utah county, Utah. It has also been documented within 5 miles of the reference line in Emery, Grand, Uintah, and Washington counties, Utah. The species is documented in Meadow Valley Wash in Lincoln County, Nevada. It is also a confirmed breeder along the Muddy River in Nevada.
Boreal owl	*Aegolius funereus*	USFS	Range: The boreal owl occurs from Alaska, south through the Rocky Mountains to northern New Mexico. Habitat: The species breeds and forages in mature, high elevation (above 9,000 feet amsl) coniferous forests, interspersed with mature aspen stands for nesting cavities. It requires large areas of forested habitat. It nests in large woodpecker holes or natural cavities in trees.	Raptor: cavities	Regions I and II: Moderate. The species is documented within 5 miles of the reference line in Carbon County, Wyoming.

COMMON NAME	SCIENTIFIC NAME	STATUS[1]	RANGE AND HABITAT REQUIREMENTS	NESTING STRUCTURE	POTENTIAL FOR OCCURRENCE2
Burrowing owl	*Athene cunicularia*	BLM; CO-ST; UT-SS Tier II	Range: The burrowing owl occurs from Canada, south through most of the western United States to central Mexico. Habitat: The species breeds and forages in a wide variety of arid and semiarid environments, including grassland, desert, and shrub-steppe habitats, and agricultural areas. It generally nests in burrows excavated by small mammals, particularly prairie dogs and ground squirrels.	Raptor: burrow nester	Regions I, II, III, and IV: High. The species is documented within the 2-mile transmission line corridor in Carbon and Sweetwater counties, Wyoming, Moffat County, Colorado, throughout Utah, and in Clark and Lincoln counties, Nevada.
Flammulated owl	*Otus flammeoulus*	BLM; USFS	Range: The flammulated owl breeds from Canada, south through Washington, Oregon, California, Nevada, Utah, Wyoming, Colorado, Arizona, New Mexico, western Texas, and Mexico. Habitat: The species breeds and forages in montane forests, especially ponderosa pine where it feeds on moths. It nests in cavities, especially abandoned woodpecker holes.	Raptor: cavities	Regions I and II: Moderate. The species is known to occur in Colorado, Utah, and Nevada. Suitable habitat occurs in Rio Blanco County, Colorado, Daggett, Sevier, and Uintah counties, Utah, and Carbon County, Wyoming. It has been documented within 1 mile of the reference line. No suitable habitat for the flammulated owl is crossed by the project alternatives in Region III.
Long-eared owl	*Asio otus*	BLM	Range: The long-eared owl occurs from southern Canada through most of the United States, except in the southeast. Habitat: The species breeds and forages in dense, woody vegetation for roosting, and open country for hunting. It nests in abandoned corvid nests in trees or brush.	Raptor: trees	Regions I, II, III, and IV: Low. The species is known to occur in Wyoming, Colorado, Utah, and Nevada. Suitable habitat occurs along the 2-mile transmission line corridor.

COMMON NAME	SCIENTIFIC NAME	STATUS[1]	RANGE AND HABITAT REQUIREMENTS	NESTING STRUCTURE	POTENTIAL FOR OCCURRENCE2
Short-eared owl	*Asio flammeus*	BLM; UT-SS Tier II	Range: The short-eared owl occurs from Alaska and Canada, south to central California and east to Maryland. Habitat: The species breeds and forages in broad expanses of open habitat, with dense, low vegetation, including grasslands, meadows, marshes, and open sagebrush shrublands. It is strongly associated with ungrazed and undisturbed native grasslands and wetlands that support dense small mammal populations. It constructs a grass nest in low vegetation.	Raptor: ground nester	Regions I, II, and III: High. The species is documented within the 2-mile transmission line corridor in Millard County, Utah and Carbon and Sweetwater counties, Wyoming. It has also been documented within 5 miles of the reference line in Beaver, Juab, and Uintah counties, Utah.
Black swift	*Cypseloides niger*	BLM; UT-SS Tier II	Range: The black swift occurs in scattered colonies throughout western North America, from southeast Alaska to central Mexico. Habitat: The species breeds and forages in a variety of habitats, foraging far from nesting areas. It nests on vertical rock faces, near waterfalls, or in dripping caves. Nests are constructed of ferns and algae in small colonies.	Cliffs	Regions I and II: High. Nesting colonies are known to occur in Utah County, Utah. The species has been documented within the 2-mile transmission line corridor in Duchesne County, Utah. It has also been documented within 5 miles of the reference line in Uintah County, Utah.
Lewis's woodpecker	*Melanerpes lewis*	BLM; UT-SS Tier II	Range: The Lewis's woodpecker occurs from southern Canada, to south-central California and New Mexico. Habitat: The species breeds and forages in open country with scattered trees, usually below 9,000 feet amsl. Habitat includes open ponderosa pine forests, burned-out coniferous stands, riparian and oak woodlands, and deciduous forests. It excavates cavities for nests in trees.	Forests: cavities	Regions I, II and III: High. The species has been documented within the 2-mile transmission line corridor area in Juab and Utah counties, Utah. It has also been documented within the 2-mile transmission line corridor in Millard and Uintah counties, Utah.

COMMON NAME	SCIENTIFIC NAME	STATUS[1]	RANGE AND HABITAT REQUIREMENTS	NESTING STRUCTURE	POTENTIAL FOR OCCURRENCE2
Red-naped sapsucker	*Sphyrapicus nuchalis*	BLM	Range: The red-naped sapsucker occurs from the Rocky Mountains, west to eastern California and Oregon, and from southern Canada to Arizona and New Mexico. Habitat: The species breeds and forages in aspen, cottonwood riparian stands, and mixed aspen/coniferous forests from 5,000 to 9,000 feet amsl. It nests in tree cavities and exhibits some nest fidelity.	Forests: cavities	Regions I, II, III, and IV: Low. The species is known to occur in Wyoming, Colorado, Utah, and Nevada.
American three-toed woodpecker	*Picoides dorsalis*	BLM; USFS; UT-SS Tier II	Range: The American three-toed woodpecker occurs from Canada and Alaska, south through the Rocky Mountains to New Mexico. Habitat: The species is a high elevation spruce-fir forest obligate. It breeds and forages in coniferous forests, particularly in burned and beetle killed areas where it scales off bark in search of prey. It nests in tree cavities.	Forests: cavities	Regions I and II: Moderate. The species has been documented within 5 miles of the reference line in Emery and Sevier counties, Utah. Suitable habitat is present within the 2-mile transmission line corridor in Wyoming, Colorado, and Utah. No suitable habitat for the American three-toed woodpecker is crossed by the project alternatives in Region III.
Bobolink	*Dolichonyx oryzivorus*	BLM; UT-SS Tier II	Range: The bobolink occurs from Canada, south to eastern Oregon, central Colorado, central Illinois, and western North Carolina. Habitat: The species breeds and forages in large grassland expanses. It constructs a grass nest in a depression in wet meadows, flooded pastures, and fields.	Grasslands: ground nester	Regions I, II, and III: Moderate. The species has been documented within 5 miles of the reference line in Carbon County, Wyoming; Uintah County, Utah; and Moffat County, Colorado. Suitable habitat occurs within the 2-mile transmission line corridor in Wyoming, Colorado, and Utah.
Baird's sparrow	*Ammodramus bairdii*	BLM	Range: Baird's sparrow occurs from Canada south through the northern Great Plains. Habitat: The species breeds and forages in shortgrass prairie. It constructs a ground nest in a depression.	Grasslands: ground nester	Region I: Low. This species may be found in grasslands and weedy fields in the Rawlins Field Office, but likely outside of the Special Status Bird Analysis Area.

COMMON NAME	SCIENTIFIC NAME	STATUS[1]	RANGE AND HABITAT REQUIREMENTS	NESTING STRUCTURE	POTENTIAL FOR OCCURRENCE2
Brewer's sparrow	*Spizella breweri*	BLM	Range: The Brewer's sparrow occurs from southeastern Alaska south to southern California and southwestern Kansas. Habitat: The species is a sagebrush obligate. It breeds and forages in sagebrush shrublands with abundant, scattered shrubs and short grasses. It constructs a nest of grass, forbs, and roots in a shrub or low tree.	Shrublands: shrubs/trees	Regions I, II, and III: High. The species has been documented within the 2-mile transmission line corridor in Lincoln County, Nevada. It has been documented within 5 miles of the reference line in Carbon and Sweetwater counties, Wyoming. Suitable habitat occurs throughout the 2-mile transmission line corridor in Wyoming, Colorado, Utah, and Nevada. No suitable habitat for the Brewer's sparrow is crossed by the project alternatives in Region IV.
Grasshopper sparrow	*Ammodramus savannarum*	BLM; UT-SS Tier II	Range: The grasshopper sparrow occurs from Canada east to southern Maine, and south to southern California and central Georgia. The main population occurs in the Great Plains. Habitat: The species breeds and forages in mid- and long-grass prairie, mixed grasslands, meadows, and open sagebrush-grasslands. It constructs a grass nest in a depression.	Grasslands: ground nester	Region I: High. The species has been documented within the 2-mile transmission line corridor in Carbon and Sweetwater counties, Wyoming.
Gray vireo	*Vireo vicinior*	BLM	Range: The gray vireo occurs in Arizona, New Mexico, Colorado, Utah, Nevada, and southern California. Habitat: The species breeds and forages in hot, arid mountains, in desert scrub, pinyon-juniper, pine-oak scrub, and high plains scrubland. It constructs a deep, rounded grass nest, suspended in a forked twig in a shrub.	Shrublands: shrubs	Regions I, II, III, and IV: High. This species has been documented within the 2-mile transmission line corridor in Lincoln County, Nevada. It has been documented within 5 miles of the reference line in Moffat, and Rio Blanco counties, Colorado. Suitable habitat occurs throughout the 2-mile transmission line corridor in Utah and Nevada.

COMMON NAME	SCIENTIFIC NAME	STATUS[1]	RANGE AND HABITAT REQUIREMENTS	NESTING STRUCTURE	POTENTIAL FOR OCCURRENCE2
Juniper titmouse	*Baeolophus griseus*	BLM	Range: The juniper titmouse occurs in western North America, from southern Oregon west to Wyoming, and south to Arizona, western Texas, and Mexico. Habitat: The species breeds and forages in juniper woodlands interspersed with sagebrush and other shrubs. It nests in a natural cavity or in an abandoned woodpecker hole.	Woodlands: cavities	Region I and II: High. The species has been documented within the 2-mile transmission line corridor in Carbon and Sweetwater counties, Wyoming, and Lincoln County, Nevada. Suitable habitat occurs throughout the 2-mile transmission line corridor in Colorado, Utah, and Nevada. No suitable habitat for the juniper titmouse is crossed by the project alternatives in Regions III and IV.
Loggerhead shrike	*Lanius ludovicianus*	BLM	Range: The loggerhead shrike occurs from south-central Canada, throughout the United States, and Mexico. Habitat: In the western U.S., the species breeds and forages in arid, open country with scattered small trees and shrubs or hedgerows. It constructs a twig nest in a thorny tree or shrub.	Shrublands: shrubs/trees	Regions I, II, III, and IV: High. The species has been documented within the 2-mile transmission line corridor in Carbon and Sweetwater counties, Wyoming, and Lincoln County, Nevada. Suitable habitat occurs throughout the 2-mile transmission line corridor in Wyoming, Colorado, Utah, and Nevada.
Pinyon jay	*Gymnorhinus cyanocephalus*	BLM	Range: The pinyon jay occurs from central Oregon, Montana, and South Dakota, south to Baja California, Arizona, and New Mexico. Habitat: The species breeds and forages in ponderosa pine savannah, pinyon-juniper, and montane shrublands. It constructs a bulky twig nest in a juniper or pine tree.	Woodlands: trees	Regions I, II, and III: High. The species has been documented within the 2-mile transmission line corridor in Lincoln County, Nevada. It is known to occur in Wyoming, Colorado, Utah, and Nevada. No suitable habitat for the pinyon jay is crossed by the project alternatives in Region IV.
Sage sparrow	*Amphispiza belii*	BLM	Range: The sage sparrow occurs from central Washington, east to northwestern Colorado and south to Baja California and northwestern New Mexico. Habitat: The species is a sagebrush obligate. It breeds and forages in habitat with tall shrubs (3 to 6 feet tall) and low grass cover, and requires large blocks of unfragmented habitat. It constructs a twig nest in sagebrush.	Shrublands: shrubs	Regions I, II, and III: High. The species has been documented within the 2-mile transmission line corridor in Carbon and Sweetwater counties, Wyoming, Moffat County, Colorado, and Lincoln County, Nevada. It has also been recorded within 5 miles of the reference line in Rio Blanco County, Colorado. Suitable habitat occurs throughout the 2-mile transmission line corridor in Wyoming, Colorado, Utah, and in Lincoln County, Nevada.

COMMON NAME	SCIENTIFIC NAME	STATUS[1]	RANGE AND HABITAT REQUIREMENTS	NESTING STRUCTURE	POTENTIAL FOR OCCURRENCE2
Sage thrasher	*Oreoscoptes montanus*	BLM	Range: The sage thrasher occurs from Canada, south through the Great Basin, to Arizona and New Mexico. Habitat: The species is a sagebrush obligate. It breeds and forages in habitat with tall shrubs (3 to 6 feet tall) and low grass cover. It constructs a bulky, twig nest in sagebrush.	Shrublands: shrubs	Regions I, II, and III: High. The species has been documented within the 2-mile transmission line corridor in Carbon and Sweetwater counties, Wyoming, and Lincoln County, Nevada. Suitable habitat occurs in Wyoming, Colorado, Utah, and in Lincoln County, Nevada.
Vesper sparrow	*Pooecetes gramineus*	BLM	Range: The vesper sparrow occurs from southern Canada to the Appalachian Mountains, along the Ohio River, and in much of the western United States. Habitat: The species breeds and forages in a variety of open, grass habitats, including sagebrush steppe, meadows, pastures, and roadsides. It constructs a grass nest in a depression.	Grasslands: ground nester	Regions I, II, and III: Low. The species is known to occur in Wyoming, Colorado, Utah, and in Lincoln County, Nevada.
Yellow-breasted chat	*Icteria virens*	BLM	Range: The yellow-breasted chat occurs throughout the United States and northern Mexico. Habitat: The species breeds and forages in riparian shrub and marshes below 7,000 feet amsl. It constructs a large leaf and weed nest in a deciduous shrub.	Woodlands: trees	Regions I, II, III, and IV: High. The species has been documented within the 2-mile transmission line corridor in Lincoln County, Nevada. It is known to occur in Wyoming, Colorado, Utah, and Nevada.

[1]Status:

FE = Federally Endangered; FT = Federally Threatened; FC = Federal Candidate; FP = Federal Proposed; EXP/NE = Experimental Non-essential population; BLM = BLM Sensitive; USFS = USFS Sensitive; CO-E = Colorado State Endangered; CO-T = Colorado State Threatened; NV-P = Nevada State Protected; UT-SS = Utah Sensitive Species (Tier I and Tier II species are defined in Utah's Comprehensive Wildlife Strategy)

[2]Potential for Occurrence

High = The species is known to occur within suitable habitat within the 2-mile transmission line corridor.

Moderate = The species is known to occur within 5 miles of the study area and suitable habitat for the species occurs within the 2-mile transmission line corridor.

Low = The known geographic range of the species is within the 2-mile transmission line corridor.

None = The geographic range of the species is outside the 2-mile transmission line corridor.

ATTACHMENT B
AVIAN NEST AND INCIDENT REPORTING FORM

Avian Nest Reporting Form

Discoverer's Name

Discoverer's Phone Number

Date of Nest Discovery

Nest Location (circle one) Tower/Pole Tree Shrub Ground

Line Name, Voltage, and Closest Tower/Pole ID

Other Specific Location Information

Surrounding Habitat (circle all that apply)

Agricultural	Chaparral/Shrubs	Desert Scrub
Disturbed/Developed	Grassland	Riparian

Nest Condition (circle one) Active Inactive, Intact Inactive, Partial Deterioration Inactive, Heavy Deterioration

Describe any Bird Signs Around the Nest (feathers, scat, prey remains)

Are Birds Present? (circle one) Yes No

Number of Birds Visible

Age of Bird(s) (circle all that apply) Adult Juvenile Nestling Eggs Unknown

Bird Species (if known)

Type of Bird (circle one if species unknown)

Raptor (hawk, falcon, eagle) Owl Crow/Raven

Passerine (small bird) Unknown

Risk to Birds/Construction (circle one)

No Risk Potential Risk – Imminent Potential Risk – Not Imminent

Additional Comments

ATTACHMENT C
AVIAN INCIDENT REPORTING FORM

Avian Incident Reporting Form

Discoverer's Name

Discoverer's Phone Number

Date of Nest Discovery

Date of Incident/Discovery

Time of Incident/Discovery

Line Name, Voltage, and Tower/Pole ID

GPS Coordinates of Incident (if available)

Species (if known)

Type of Bird (circle one if species unknown)

Raptor (hawk, falcon, eagle)	Owl	Crow/Raven
Passerine (small bird)	Waterfowl	Unknown

Number of Birds

Age of Bird(s) (circle all that apply) Adult Juvenile Nestling Eggs Unknown

Surrounding Habitat (circle all that apply)

Agricultural	Chaparral/Shrubs	Desert Scrub
Disturbed/Developed	Grassland	Riparian

Type of Incident (circle one) Injury Mortality

Description of Incident. Include condition of bird, circumstances of incident and cause of injury or mortality, and any damage or impacts to construction.

ATTACHMENT D
DESIGN STANDARDS

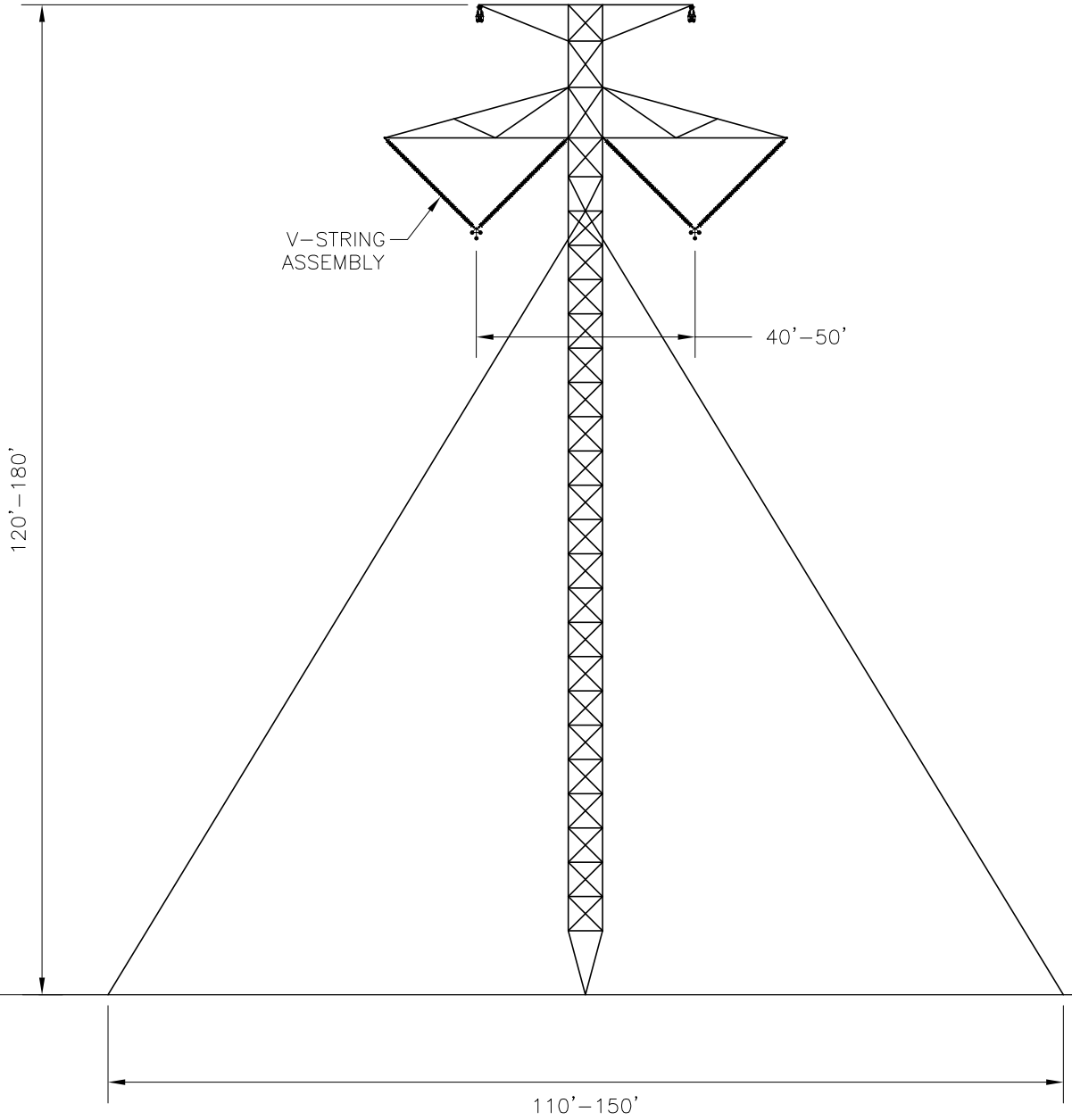

NOTES

1. DIMENSIONS SHOWN ARE FOR ILLUSTRATION PURPOSES ONLY.
2. TOWER OUTLINE AND BRACINGS ARE INDICATIVE ONLY.

POWER ENGINEERS
www.powereng.com

TRANSWEST EXPRESS TRANSMISSION PROJECT
FIGURE 1

TYPICAL ±600kV DC
GUYED V–STRING
LATTICE STRUCTURE

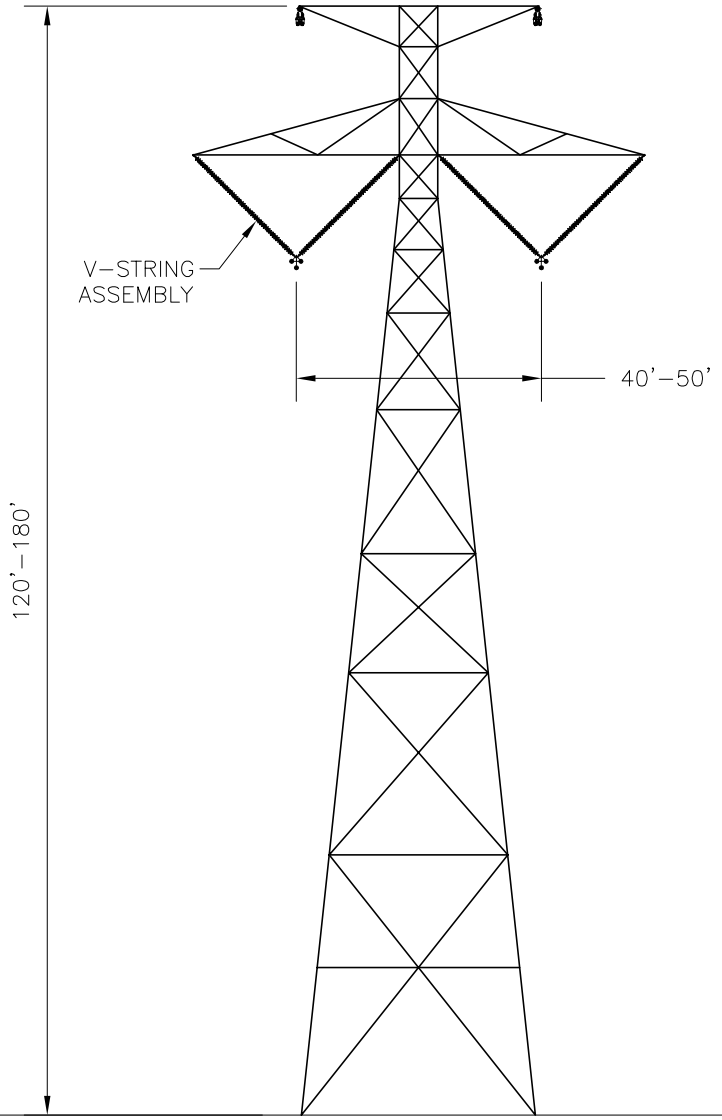

NOTES

1. DIMENSIONS SHOWN ARE FOR ILLUSTRATION PURPOSES ONLY.
2. TOWER OUTLINE AND BRACINGS ARE INDICATIVE ONLY.

POWER ENGINEERS
www.powereng.com

TRANSWEST EXPRESS TRANSMISSION PROJECT
FIGURE 2

TYPICAL ±600kV DC
SELF SUPPORTING LATTICE
V–STRING STRUCTURE

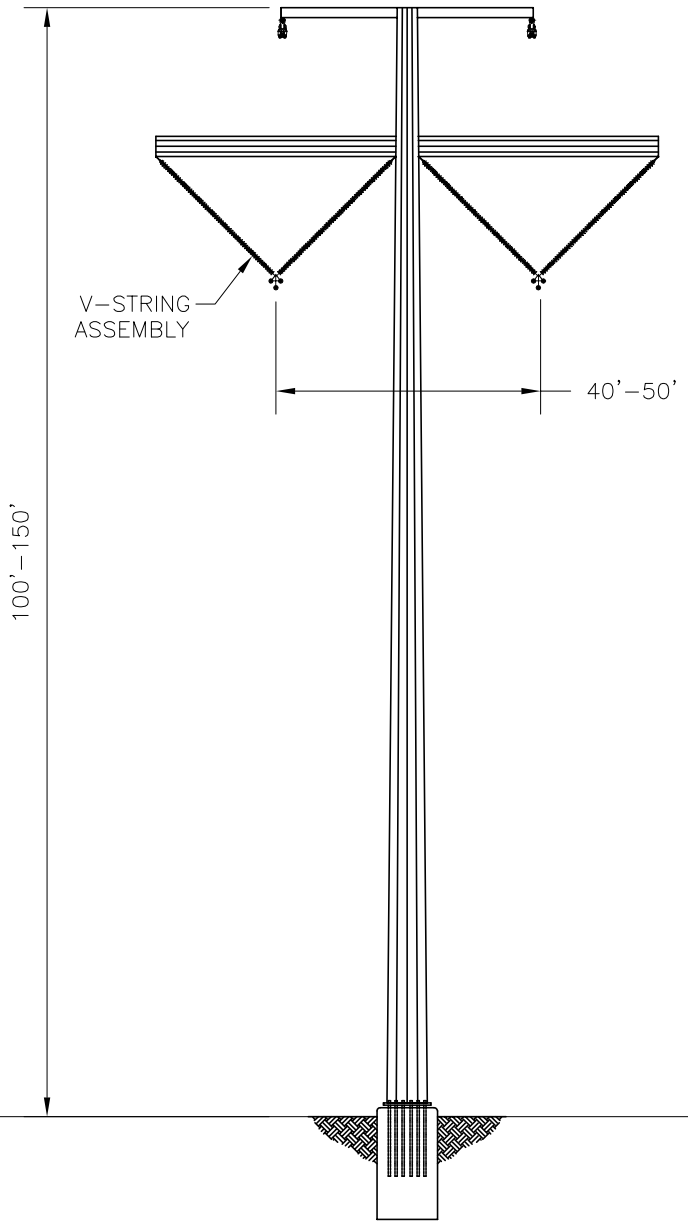

NOTES

1. DIMENSIONS SHOWN ARE FOR ILLUSTRATION PURPOSES ONLY.

POWER ENGINEERS
www.powereng.com

TRANSWEST EXPRESS TRANSMISSION PROJECT
FIGURE 3

TYPICAL ±600kV DC
TUBULAR STEEL POLE
V–STRING STRUCTURE

EFORMED LINE PRODUCTS
The connec ion you can count o .

BIRD-FLIGHT™ DIVERTER

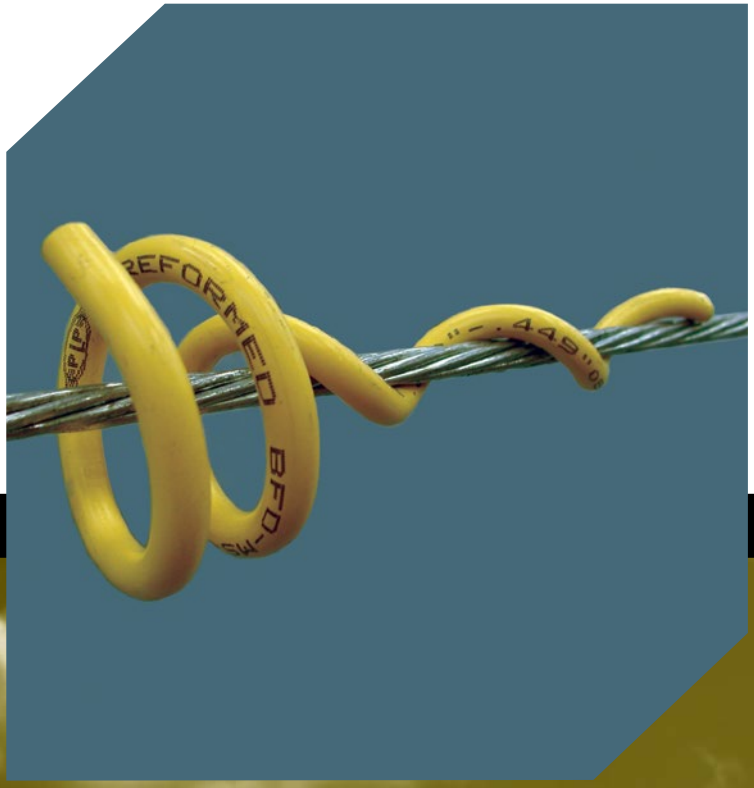

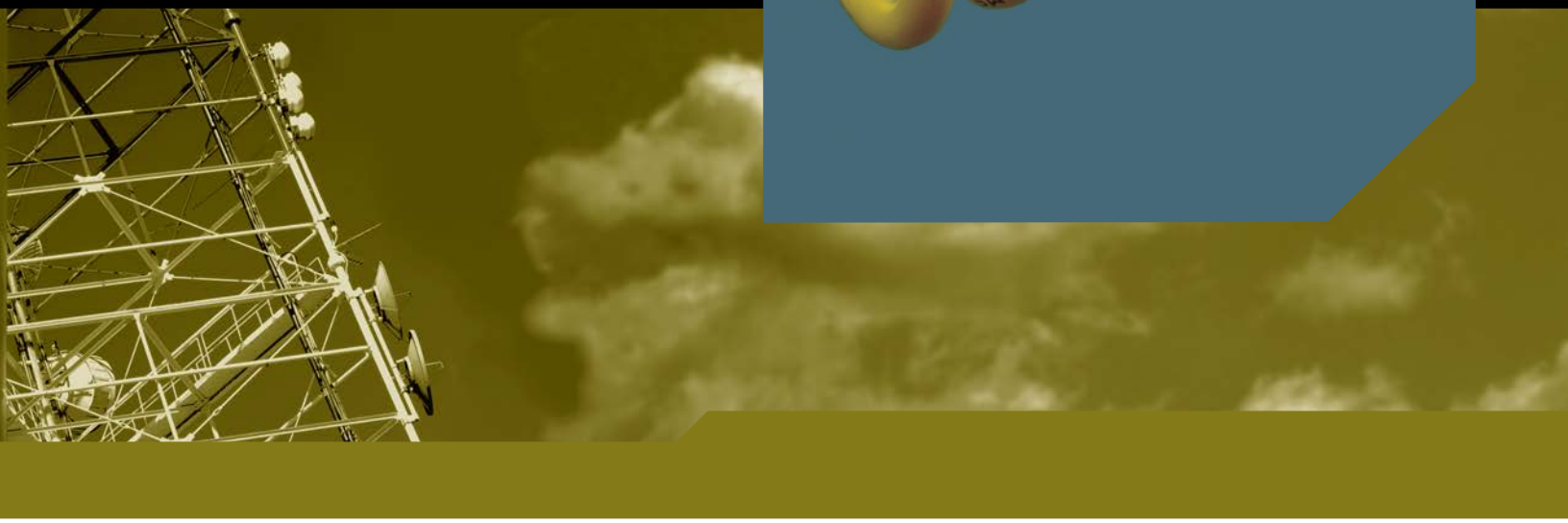

COMMUNICATIONS ENERGY SPECIAL INDUSTRIES SOLAR

PLP® Special Industries Products

BIRD-FLIGHT™ Diverter

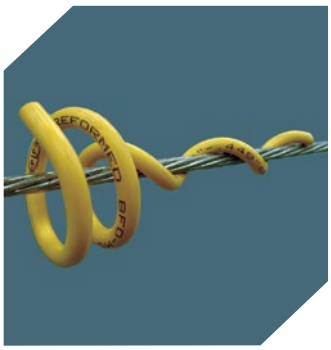

General Information

The BIRD-FLIGHT Diverter is designed to make overhead lines and guyed structures visible to birds and provides an economical means of reducing the hazard to both lines and birds.

The BIRD-FLIGHT Diverter is lightweight, offers little wind resistance and is easily and quickly applied by hand. The positive grip of the fitting on the cable ensures that it remains in the applied position and cannot move along the span under aeolian vibration or other conditions.

Visibility

The diverter section increases the visible profile of the cable and is designed to ensure safety, but avoid an undesirably bulky outline.

Material

Manufactured from rigid high impact polyvinyl chloride (PVC), the BIRD-FLIGHT Diverter possesses excellent chemical and strength properties and will retain good physical characteristics within a range of extreme temperatures. The performance of the BIRD-FLIGHT Diverter is not deteriorated in severe weather conditions. Industrial fumes and salt water cannot seriously degrade the properties of rigid PVC.

Product Characteristics

BIRD-FLIGHT Diverters are designed to offer the following advantages:

- Increased conductor/strand profile to provide enhanced visibility where bird flight paths are present
- Economical and easily applied
- Lightweight
- Long service life without deterioration of material properties
- Minimal wind resistance
- Manufactured from gray or yellow high impact PVC with UV protection (Contact PLP for other color/voltage options).

Application Notes

Ensure the correct size BIRD-FLIGHT Diverter is used. For a detailed installation description, refer to the application procedure SP2805.

Spacing

For optimum results the recommended spacing distances are 15 foot intervals depending upon local conditions. Since wind resistance is limited, more BIRD-FLIGHT Diverters can be used to ensure adequate visibility without creating stresses on the line.

Product Data

Catalog Number (Yellow)	Catalog Number (Gray)	Conductor Ranger (in) Min	Conductor Ranger (in) Max	Overall Length	Internal Diameter of Diverter Coil	Diameter of PVC Rod	Approx. Weight (lbs)	Color Code
BFD-MS-3331	BFD-MS-3346	.175	.249	8.00	1.50	.375	.090	Black
BFD-MS-3155	BFD-MS-2921	.250	.349	8.50	1.75	.375	.100	Blue
BFD-MS-3164	BFD-MS-3355	.350	.449	9.50	2.00	.375	.110	Brown
BFD-MS-11135	BFD-MS-11060	.350	.449	12.37	4.50	.500	.240	Brown
BFD-MS-3341	BFD-MS-3366	.450	.599	11.00	2.25	.375	.140	Green
BFD-MS-3344	BFD-MS-3371	.600	.770	13.00	2.75	.500	.300	Purple
BFD-MS-3345	BFD-MS-3376	.771	.858	15.00	3.25	.500	.330	Red
BFD-MS-3405	BFD-MS-11699	.859	.942	16.50	3.75	.500	.360	Orange
BFD-MS-11111	BFD-MS-12290	.971	1.121	15.50	4.25	.438	.420	Pink
BFD-MS-11430		1.122	1.306	16.25	4.38	.438	.450	Gray
BFD-MS-11110		1.307	1.530	17.00	4.70	.438	.450	Black
BFD-MS-12351		1.531	1.786	20.00	4.88	.438	.520	White
BFD-MS-11566		1.787	2.100	23.00	5.25	.438	.600	Purple
BFD-MS-12603		2.101	2.500	26.00	5.25	.438	.650	Orange

PREFORMED
LINE PRODUCTS

World Headquarters
660 Beta Drive
Cleveland, Ohio 44143

Mailing Address:
P.O. Box 91129
Cleveland, Ohio 44101

Telephone: 440.461.5200
Fax: 440.442.8816
Web Site: www.preformed.com
E-mail: inquiries@preformed.com

© 2006 Preformed Line Products
Printed in U.S.A.
NU-SS-1035-1
02.14.20
01.08.2M

Raptor, Guard, coverup, cover up, sage grouse, eagle, whooping crane, endangered, RUS, USFW, mitigation, wildlife, redtail, squirrel, woodpecker, power line, pole, cross-arm, crossarm, cross arm, raccoon, nest, nest diverter, spike, perch, perch excluder, excluder, insula insulator, golden eagle, bald eagle, windfarm, flight diverter, bird flight diverter, line marker, glow marker, kaddas, cantega, tyco, salisbury hose, salisbury

Power LineSentry

Home Products Sales Contact

Avian Flight Diverters

The Patented shape is designed to provide excellent visibility at any angle of approach...day or night. This profile is based on research that found contrast in low light conditions is the most important aspect to alert birds of the oncoming power lines, guy and static wires.

Specifications

- UV resistant RPVC
- Florescent reflective yellow prism tap
- 24 hour glow tape for improved dawn, dusk, and night visibility
- Withstands > 100 mph winds for sustained periods
- Patented "V" shape design for maximum constrast at all angles
- Hotstick or Extended Stick capable
- Recommend Spacing: 30 feet apart in normal areas and 15 feet apart in high priority zones
- Size: .08" thick by 6.0" by 4" tall
- Weight: 4.7 oz.
- Patent No. 8,438,998

Flight Diverter and Line Marker Sizes

Product Number	Description	Wire Size	Box Qty
BFD-050	Line Marker for .20" - .56" total diameter wire	#6, #4, #2, #1, 1/0, 2/0, static, OPGW	50
BFD-075	Line Marker for .57" - 1.10" total diameter wire	3/0, 4/0, 266 mcm - 666 mcm	50
BFD-XX	Larger sizes available - Call for quotation		
BFD-AT	Hotstick and Extending stick attachment tool	All Sizes	1

Raptor Guard Part Number Chart

Example: BFD-050

BFD - Bird Flight Diverter

050- fits #6 through 2/0, static and OPGW
050G - fits up to .58" guy wire
075 - fits 3/0, 4/0, 266 - 666 mcm
XX - Call for larger custom sizes
AT - Hotstick attachment tool

Fresh Links

- Avian Power Line Interaction Committee - APLIC
- Rural Utility Services - RUS
- Raptor Research Foundation - RRF

Contact

Power Lne Sentry, LLC
432 WCR 66, Fort Collins, CO 80524
Phone: 970-599-1050
Email: info@powerlinesentry.com

Copyright © Power Line Sentry LLC

P&R TECH

making life visibly safer

P&R Technologies, Inc. Phone 503-292-8682 Toll Free 800-722-8078 Fax 503-292-8697 www.pr-tech.com

BirdMark BM-AG Bird Diverter

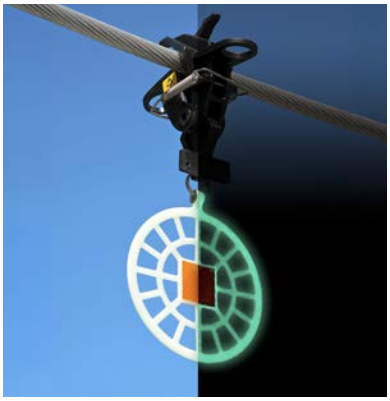

Helping Birds See Hazards Day or Night

Birds large and small—including swans, eagles, hawks, ducks, geese, and many others—often cannot see power lines near the horizon, and they lack the maneuverability to avoid them when they get close enough to see them. Over one million birds are killed annually in North America! BirdMark BM-AG (After Glow) diverters are designed to prevent collisions between birds and hard-to-see power lines day or night.

Easy to See

The BirdMark BM-AG offers a low cost, permanent solution for helping endangered species avoid power lines in traditional flight paths. BirdMarks stand out like a beacon against background features, letting birds see where the power lines are. When swaying in the wind, BirdMarks also make a noise that birds can hear. Highly reflective orange and yellow tape is positioned in the center of each BirdMark to further assist in warning birds.

Night Glow Capability

Other types of bird diverters are usually designed to help birds avoid obstructions during daylight, but recent studies indicate that most bird collisions happen during low light situations such as fog, rain, and the hours before and after dusk. The BirdMark BM-AG glows up to 10 hours after the sun has set, providing extended protection for at risk birds.

Easy to Install

The BirdMark BM-AG can be installed and removed from the ground without interrupting power. Our patented SnapFast mounting clamp securely prevents line slippage on single or bundled cables 0.375"–2.75" in diameter. (Clamp for smaller lines available by special order.) Once in position, the grip is such that the BirdMark BM-AG stays in position, even in a Force 8 gale.

Features

- Highly visible day and night
- Sways and reflects in the wind to alert birds of obstructions
- Glows up to 10 hours after dusk and in other low light conditions
- Fully tested and developed by biologists
- Rugged spring-loaded clamp prevents line slippage
- Quick installation by hot stick
- Easily moved for seasonal flight path variations
- Also hazes birds from buildings and structures

Dimensions

- 11½" total length
- 5⅜" diameter white disk
- Use 15ft spacing for best results

EFORMED LINE PRODUCTS
The connec ion you can count o .

SWAN-FLIGHT™ DIVERTER

COMMUNICATIONS ENERGY SPECIAL INDUSTRIES SOLAR

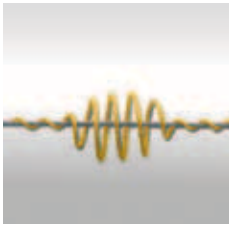

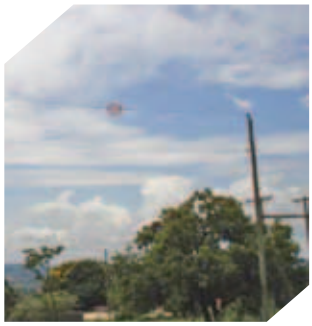

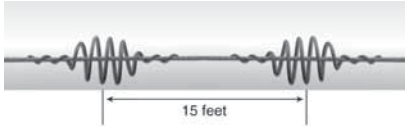

PLP® Distribution Products

SWAN-FLIGHT™ DIVERTER

Description

The Preformed Line Products SWAN-FLIGHT Diverter is designed for use on overhead conductors to create greater visibility for avian flight paths on overhead lines and tower down guys. Offering little wind resistance, it reduces hazards to both lines and birds. For low and medium voltage construction, apply the SWAN-FLIGHT Diverter to phase conductors (bare or jacketed). For high voltages, it is typically used on shield wire.

The SWAN-FLIGHT Diverter is lightweight, offers little wind resistance and is easily and quickly applied by hand or hot stick. The positive grip on the conductor is designed to ensure that the SWAN-FLIGHT Diverter remains in the applied location and does not move along the span under Aeolian vibration or other conditions.

Materials

Manufactured from rigid high impact polyvinyl chloride (PVC), the SWAN-FLIGHT Diverter possesses excellent chemical resistance, strength properties and will retain good physical characteristics within a range of extreme temperatures. Industrial fumes and salt water cannot seriously degrade the properties of rigid PVC.

Spacing

For optimal results, spacing distances are generally recommended at 15' intervals, depending upon local conditions. Since wind resistance is very limited, sufficient SWAN-FLIGHT Diverters can be used to ensure adequate visibility without creating stresses on the line. When marking adjacent spans, overall visibility is improved by staggering the placement between the spans.

Features

SWAN-FLIGHT Diverters are designed to offer the following advantages:

- Increased conductor profile to provide increased visibility where large, slow moving bird flight paths are present
- Economical and easily applied
- Lightweight
- Long service life without deterioration of material properties
- Minimal wind resistance
- Manufactured from gray or yellow high impact PVC with UV protection

Visibility

The diverter section increases the visible profile of the cable or conductor to ensure safety, but avoids an undesirable bulky outline.

Application

Ensure the correct size SWAN-FLIGHT Diverter is used. For detailed installation description, refer to the application procedure. Hot stick application is fast and simple with standard equipment.

SWAN-FLIGHT Diverter - Product Data

PLP Catalog Number	Conductor Range (Inches)		Overall Length (Inches)	Diameter of Diverter Coil (Inches)	Diameter of PVC Rod (Inches)	Approx. Weight (lbs)	Color Code
	Min	Max					
SFD-0445	0.175	0.249	20	7.0	0.375	0.40	Black
SFD-0635	0.250	0.349	23	7.0	0.375	0.46	Blue
SFD-0890	0.350	0.449	25	7.5	0.375	0.50	Brown
SFD-1140	0.450	0.599	35	8.0	0.375	0.70	Green
SFD-1520	0.600	0.770	38	8.0	0.500	1.40	Purple
SFD-1960	0.771	0.858	38	8.0	0.500	1.40	Red
SFD-2220	0.859	0.942	40	8.0	0.500	1.50	Orange
SFD-2460	0.943	1.121	40	8.0	0.500	1.50	Pink
SFD-2700	1.122	1.306	40	8.0	0.500	2.00	Gray*
SFD-3035	1.307	1.530	46	8.0	0.500	2.00	Black

*Gray is the standard color. For yellow add "-Y" after the catalog number.
For voltage over 230kv, add "-B" for black semi-conductive material.

PREFORMED LINE PRODUCTS

World Headquarters
660 Beta Drive
Cleveland, Ohio 44143

Mailing Address:
P.O. Box 91129
Cleveland, Ohio 44101

Telephone: 440.461.5200
Fax: 440.442.8816
Web Site: www.preformed.com
E-mail: inquiries@preformed.com

© 2011 Preformed Line Products
Printed in U.S.A.
EN-SS-1076-1
09.11.00

APPENDIX C
FRAMEWORK BLASTING PLAN

TABLE OF CONTENTS

C1.0 INTRODUCTION 1

C2.0 PLAN PURPOSE 1

C3.0 REGULATORY 1

C4.0 BLASTING PLAN GUIDANCE 1

C5.0 BLASTING PLAN CONTENTS 2

C6.0 SAFETY MEASURES 3

C6.1 TRANSPORTATION 3
C6.2 STORAGE 4
C6.3 FIRE SAFETY 4

C7.0 DESIGN FEATURES AND BEST MANAGEMENT PRACTICES 4

ACRONYMS

Applicant	TransWest Express LLC, also TransWest
ATF	Bureau of Alcohol, Tobacco, Firearms, and Explosives
BLM	Bureau of Land Management
BMP	Best Management Practice
CFR	Code of Federal Regulations
CIC	Compliance Inspection Contractor
COM Plan	Construction, Operation, and Maintenance Plan
DEIS	Draft Environmental Impact Statement
NESC	National Electrical Safety Code
NTP	Notice to Proceed
OSHA	Occupational Safety and Health Administration
Plan	Blasting Plan
POD	Plan of Development
PPE	Personal Protective Equipment
Project	TransWest Express Transmission Project, also TWE Project
TransWest	TransWest Express LLC, also Applicant
TWE Project	TransWest Express Transmission Project, also Project
USDOT	United States Department of Transportation
USFS	United States Forest Service

C1.0 INTRODUCTION

This framework Blasting Plan (Plan) outlines the contents, procedures, safety measures, and environmental protection measures that will go into a final Blasting Plan for the TransWest Express Transmission Project (TWE Project or Project) where blasting activities are required during construction. The final Blasting Plan will be prepared by the Construction Contractor(s) prior to construction of the Project. The TWE Project is being developed by TransWest Express LLC (TransWest or Applicant).

C2.0 PLAN PURPOSE

The purpose of the Blasting Plan is to provide safe procedural practices, environmental protection measures, and other specific stipulations and methods to minimize the environmental impact of blasting during Project construction. The final Blasting Plan will provide construction crews, environmental monitors, and the Compliance Inspection Contractor (CIC) with Project-specific information concerning blasting procedures. The primary objective of this Plan is to prevent adverse impacts to human health and safety, property, and the environment that could potentially occur as a result of construction of the TWE Project. This Plan incorporates Best Management Practices (BMPs) and Mitigation Measures identified in the Draft Environmental Impact Statement (DEIS) for the TWE Project.

C3.0 REGULATORY

The Construction Contractor(s) will be responsible for preparing and implementing the Blasting Plan in compliance with all local, state, and federal regulations pertaining to blasting. No blasting operations will be undertaken until approval and appropriate permits have been obtained from the applicable agencies. The Construction Contractor(s) will use qualified, experienced, and licensed professionals that will perform blasting using current and professionally accepted methods, products, and procedures to maximize safety during blasting operations.

C4.0 BLASTING PLAN GUIDANCE

Prior to blasting, the Construction Contractor(s) will prepare a final Blasting Plan for review by the Bureau of Land Management (BLM), CIC, and any other relevant jurisdictional organization as applicable. The final Blasting Plan will address blasting operations and safety and include full details of the drilling and blasting patterns, as well as the procedures the Construction Contractor(s) proposes to use for both production and controlled blasting. If at any time changes are proposed to the final Blasting Plan, the Construction Contractor(s) will submit them to BLM and CIC for review. The following items should be addressed in a Blasting Plan:

1. Identify proposed methods to achieve the desired excavations using individual shot plants (where the explosives are planted).

2. Address the proposed methods for controlling fly rock, blasting warnings, and use of non-electrical blasting systems.

3. Map explosive storage locations and areas where blasting will occur, including identification of blasting within 0.25 mile of a known sensitive resource; as well as blasting in the vicinity of pipelines, and wells and springs that may be impacted.

4. Identify blasting procedures including safety, use, storage, and transportation of explosives that will be employed where blasting is needed, and will specify the locations of needed blasting.

5. All blasting will be performed by current registered licensed blasters who will be required to secure all necessary permits and comply with regulatory requirements in connection with the transportation, storage, and use of explosives, and blast vibration limits for nearby structures, utilities, and wildlife.

6. Appropriate flags, barricades, and warning signals will be used to ensure safety during blasting operations. Blast mats will be used when needed to prevent damage and injury from fly rock.

7. Blasting near buildings, structures, and other facilities susceptible to vibration or air blast damage will be carefully planned by the contractor and controlled to eliminate the possibility of damage to such facilities and structures. The Blasting Plan will include provisions for control to eliminate vibration, fly rock, and air blast damage.

8. Blasting in the vicinity of pipelines will be coordinated with the pipeline operator, and will follow operator-specific procedures, as necessary.

9. Damages that result from blasting will be repaired or the owner fairly compensated.

C5.0 BLASTING PLAN CONTENTS

The Blasting Plan will include at a minimum the following information:

1. Blast officer
    a. Other personnel who will be present
2. Site and location of planned blasting
    a. Date of planned blasting
3. Environmental protection Measures
4. Safety Considerations
5. Explosives
    a. Type
    b. Quantity
    c. Detonator device
6. Means of transporting explosives
    a. Provisions for storing and securing explosives on site
7. Minimum acceptable weather conditions
    a. If electrical initiation to be used – considerations for stray radio frequency energy and electrical currents
8. Procedures
    a. Handling explosive charges
    b. Setting explosive charges

   c. Wiring explosive charges
   d. Firing explosive charges
9. Required Personal Protective Equipment (PPE)
10. Minimum standoff distances
    a. Procedures for clearing and controlling access to blast danger
11. Procedures for handling misfires or other unusual occurrences
12. Emergency action plan
    a. Phone numbers
       i. Ambulance
       ii. Fire department
       iii. Police
    b. Location and phone number of nearest medical services facility
    c. Actions to be taken when a person is injured
13. Attach a copy of material safety data sheet for each explosive or other hazardous material expected to be used

C6.0 SAFETY MEASURES

C6.1 Transportation

Transportation of explosives will comply with all applicable federal, state, and local laws, including Title 49 of the Code of Federal Regulations (CFR), Chapter III. These regulations are administered by the U.S. Department of Transportation (USDOT) and govern the packaging, labeling, materials compatibility, driver qualifications, and safety of transported explosives. In general, these regulations require vehicles carrying explosive materials must be well-maintained, properly marked with placards, and have a non-sparking floor. Materials in contact with the explosives will be non-sparking, and the load will be covered with a fire- and water-resistant tarpaulin. Vehicles also must be equipped with fire extinguishers and a current copy of the USDOT and Transport Canada's 2012 *Emergency Response Guidebook*. Every effort will be made to minimize the transportation of explosives through congested or heavily populated areas.

Prior to loading an appropriate vehicle for carrying explosives, the vehicle shall be fully fueled and inspected to ensure its safe operation. Refueling of vehicles carrying explosives shall be avoided. Smoking shall be prohibited during the loading, transporting, or unloading of explosives. In addition, the following specific restrictions apply to transport of other items in vehicles carrying explosives:

- Tools may be carried in the vehicle, but not in the cargo compartment.
- Detonation devices can, in some cases, be carried in the same vehicle as the explosives, but they must be stored in a specially constructed compartment(s).
- Batteries and firearms shall never be carried in a vehicle with explosives.
- Vehicle drivers must comply with the specific laws related to the materials being transported.

- Vehicles carrying explosives shall not be parked or left unattended except in designated parking areas with approval of the State Fire Marshall. When traveling, vehicles carrying explosives will avoid congested areas to the maximum extent possible.

C6.2 Storage

Explosives must be stored in an approved structure (magazine) and kept cool, dry, and well-ventilated. The Construction Contractor will provide the Bureau of Alcohol, Tobacco, Firearms and Explosives (ATF) Cheyenne Wyoming, Denver Colorado, Salt Lake City Utah, and Las Vegas Nevada Field Offices with a list of dates and locations for the explosives and blasting agent storage facilities to be used on the Project at least 14 days before the establishment of such storage facilities.

At a minimum, the following storage requirements will be implemented:

- Explosives must be stored in an approved structure (magazine), and storage facilities will be bullet-resistant, weather-resistant, theft-resistant, and fire-resistant.
- Magazine sites will be located in remote (out-of-sight) areas with restricted access; kept cool, dry, and well ventilated; and will be properly labeled and signed.
- Detonators will be stored separately from other explosive materials.
- The most stringent spacing between individual magazines will be determined according to the guidelines contained in the ATF publication or state or local explosive storage regulations.
- Both the quantity and duration of temporary on-site explosives storage will be minimized.
- The Construction Contractor will handle and dispose of dynamite storage boxes in accordance with relevant federal, state, and local laws.

C6.3 Fire Safety

The presence of explosive materials on the Project site could potentially increase the risk of fire during construction. Special precautions will be taken to minimize this risk in conjunction with Appendix H - Fire Protection Plan, including but not limited to:

- Prohibiting ignition devices within 50 feet of explosives storage areas;
- Properly maintaining magazine sites so they are clear of fuels and combustible materials, well ventilated, and fire-resistant;
- Protecting magazines from wildfires that could occur in the immediate area;
- Posting fire suppression personnel at the blast site during high fire danger periods; and
- Prohibiting blasting during extreme fire danger periods.

C7.0 DESIGN FEATURES AND BEST MANAGEMENT PRACTICES

In addition to applicable design and operational standards, regulations, laws and permit requirements, the following design features and BMPs have been developed to avoid or minimize potential blasting

related impacts. Note that the Construction, Operation and Maintenance (COM) Plan will be a part of the Notice to Proceed (NTP) Plan of Development (POD).

TWE-51: The TWE Project will be designed, constructed, and operated to meet or exceed the requirements of the National Electrical Safety Code (NESC), U.S. Department of Labor, Occupational Safety and Health Administration (OSHA) standards, and the Applicant's requirements for safety and protection of landowners and their property.

TWE-53: The Construction, Operation and Maintenance (COM) Plan will include a Blasting Plan, which will identify methods and mitigation measures to minimize the effects of blasting, where applicable. The Blasting Plan will document the proposed methods to achieve the desired excavations, proposed methods for blasting warning, use of non-electrical blasting systems, and provisions for controlling fly rock, vibrations, and air blast damage.

TWE-56: As part of the COM Plan, the Applicant will provide a Health and Safety Plan, which will outline measures to protect workers and the general public during construction, operation, and decommissioning of the TWE Project. The Plan will identify applicable federal and state occupational safety standards, establish safe work practices, and define safety performance standards.

TWE-64: The COM Plan will include a Fire Protection Plan. The Applicant or its Contractor(s) will notify the BLM of any fires and comply with all rules and regulations administered by the BLM and U.S. Forest Service (USFS) concerning the use, prevention, and suppression of fires on federal lands, including any fire prevention orders that may be in effect at the time of the permitted activity. The Applicant or its Contractor(s) may be held liable for the cost of fire suppression, stabilization, and rehabilitation. In the event of a fire, personal safety will be the first priority of the Applicant or its Contractor(s). The Applicant or its Contractor(s) will:

- Operate all internal and external combustion engines on federally-managed lands per 36 CFR Part 261.52(j), which requires all such engines to be equipped with a qualified spark arrester that is maintained and not modified;

- Carry shovels, water, and fire extinguishers that are rated at a minimum as ABC-10 pound on all equipment and vehicles. If a fire spreads beyond the suppression capability of workers with these tools, all workers will cease fire suppression action and leave the area immediately via pre-identified escape routes;

- Initiate fire suppression actions in the work area to prevent fire spread to or on federally-administered lands. If fire ignitions cannot be prevented or contained immediately, or it may be foreseeable that a fire would exceed the immediate capability of workers, the operation must be modified or discontinued. No risk of ignition or re-ignition will exist upon leaving the operation area;

- Notify the appropriate fire center immediately of the location and status of any escaped fire;

- Review weather forecasts and the potential fire danger prior to any operation involving potential sources of fire ignition from vehicles, equipment, or other means. Prevention measures to be taken each work day will be included in the specific job briefing. Consideration will be given to additional mitigation measures or temporary discontinuance of the operation during periods of extreme winds or dryness;

- Operate all vehicles on designated roads vehicle parking to be restricted to areas free of vegetation on roads or within the permitted ROW and designated work areas.;

- Operate welding, grinding, or cutting activities in areas cleared of vegetation within range of the sparks for that particular action. A spotter will be required to watch for ignitions; and

- Use only diesel-powered vehicles in areas where excessive heat from vehicle exhaust systems could start brush or grass fires.

Additional BMPs and Mitigation Measures identified in the Draft EIS are listed below. The identified BMPs and Mitigation Measures have not been finalized at this time and may be updated, changed, or eliminated in future revisions of this Plan.

PHS-1: The applicant shall prepare an explosives use plan that specifies the times and meteorological conditions when explosives will be used and specifies minimum distances from sensitive vegetation and wildlife or streams and lakes.

PHS-2: If blasting or other noisy activities are required during the construction period, the applicant must notify nearby residents in advance.

PHS-4: A health and safety program shall be developed by the applicant to protect both workers and the general public during construction, operation, and decommissioning of an energy transport project. The program should identify all applicable federal and state occupational safety standards, establish safe work practices for each task (e.g., requirements for personal protective equipment and safety harnesses, OSHA standard practices for safe use of explosives and blasting agents, measures for reducing occupational electromagnetic field exposures), and define safety performance standards (e.g., electrical system standards). The program should include a training program to identify hazard training requirements for workers for each task and establish procedures for providing required training to all workers. Documentation of training and a mechanism for reporting serious accidents to appropriate agencies should be established.

AIR-2: To minimize fugitive dust generation, the applicant shall water land before and during surface clearing or excavation activities. Areas where blasting will occur should be covered with mats.

WAT-1: Blasting activities will be avoided or minimized in the vicinity of sole source aquifer areas to reduce the risk of releasing sediments or particles into the groundwater and inadvertently plugging water supply wells.

NOISE-1: The applicant shall limit noisy construction activities (including blasting) to the least noise-sensitive times of day (i.e., daytime only between 7 a.m. and 10 p.m.) and weekdays.

APPENDIX D
FRAMEWORK CULTURAL RESOURCES PROTECTION AND MANAGEMENT PLAN

TABLE OF CONTENTS

D1.0 INTRODUCTION 1
D2.0 PLAN PURPOSE 1
D3.0 PLAN UPDATES 1
D4.0 REGULATORY REQUIREMENTS 1

ACRONYMS

ACHP	Advisory Council on Historic Preservation
AHPA	Archaeological Historic Preservation Act of 1974
AIRFA	American Indian Religious Freedom Act of 1978
Applicant	TransWest Express LLC, also TransWest
ARPA	Archaeological Resources Protection Act of 1979
BIA	Bureau of Indian Affairs
BLM	Bureau of Land Management
CFR	Code of Federal Regulations
CRS	Colorado Revised Statutes
NAGPRA	Native American Grave Protection and Repatriation Act of 1990
NHPA	National Historic Preservation Act
NPS	National Park Service
NRS	Nevada Revised Statutes
NTP	Notice to Proceed
PA	Programmatic Agreement
Plan	Cultural Resources Protection and Mitigation Measures Plan
POD	Plan of Development
Project	TransWest Express Transmission Project, also TWE Project
Reclamation	Bureau of Reclamation
ROD	Record of Decision
ROW	right-of-way
TransWest	TransWest Express LLC, also Applicant
TWE Project	TransWest Express Transmission Project, also Project
U.S.C.	United States Code
UCA	Utah Code Annotated
USFS	United States Forest Service
USFWS	United State Fish and Wildlife Service
Western	Western Area Power Administration
WS	Wyoming Statutes

D1.0 INTRODUCTION

This framework Cultural Resources Protection and Management Plan (Plan) outlines the contents, procedures, and environmental protection measures that will be taken by TransWest Express LLC (TransWest or Applicant) and its Construction Contractor(s) for the TransWest Express Transmission Project (TWE Project or Project). This Plan is largely related to the development of a Programmatic Agreement (PA) between TransWest and various agencies and consulting parties.

D2.0 PLAN PURPOSE

The Bureau of Land Management (BLM) has determined that issuance of the right-of-way (ROW) grant for the TWE Project and related authorizations is an undertaking as defined at 36 Code of Federal Regulations (CFR) 800.16(y) that triggers the requirements of Section 106 of the National Historic Preservation Act of 1966, as amended (NHPA Section 106) on affected federal and non-federal lands during the planning, construction, operation, maintenance and decommissioning of the Undertaking. For purposes of the Undertaking, the BLM Wyoming State Office is lead federal agency for compliance with NHPA Section 106 on behalf of the involved federal agencies. Because the effects on historic properties are multi-state in scope and cannot be fully determined prior to approval of the Undertaking, the BLM, in consultation with the Consulting Parties has determined to use a phased process to identify historic properties (36 CFR 800.4(b)(2)) and assess the effects on those properties (36 CFR 800.5(a)(3)); such that completion of the identification and evaluation of historic properties, determinations of effect on historic properties, and consultation concerning measures to avoid, minimize, or mitigate any adverse effects will be carried out in phases as part of planning for and prior to any Notice to Proceed (NTP) and Undertaking implementation. Therefore, the BLM has determined that a PA documenting the terms and conditions for compliance with Section 106 will be entered into among Consulting Parties according to 36 CFR 800.14(b)(1)(ii).

Signatories to the PA include the BLM, Western Area Power Administration (Western), the United States Forest Service (USFS), the National Park Service (NPS), the Bureau of Reclamation (Reclamation), the Bureau of Indian Affairs (BIA), the U.S. Fish and Wildlife Service USFWS), the U.S. Army Corps of Engineers (USACE) - Sacramento District, the Advisory Council On Historic Preservation (ACHP), the Wyoming State Historic Preservation Officer, the Colorado State Historic Preservation Officer, the Utah State Historic Preservation Officer, and the Nevada State Historic Preservation Officer. TransWest is an Invited Signatory to the PA. Tribes and other interested parties may be Concurring Parties to the PA.

Execution and implementation of the PA satisfies the federal agencies' Section 106 responsibilities for the Project. As an Invited Signatory, TransWest has certain responsibilities under the PA and will comply with the terms and conditions of the PA.

D3.0 PLAN UPDATES

This Plan will be updated for the NTP Plan of Development (POD) once the PA is signed and the selected Agency Preferred Alternative is identified. Other plans that may be developed related to the protection and management of cultural resources, such as a Historic Properties Treatment Plan, Monitoring Plan, or Unanticipated Discovery Plan, will be incorporated into the PA as they become available.

D4.0 REGULATORY REQUIREMENTS

The TWE Project will require the issuance of ROW grants and special use authorizations; and therefore, qualifies as a federal Undertaking and must comply with Section 106 of the NHPA. Other federal and state laws concerning the protection of cultural resources that must be complied with include:

- American Indian Religious Freedom Act of 1978 (AIRFA) (42 United States Code [U.S.C.] §1996)
- Antiquities Act of 1906 (16 U.S.C. §431-433)
- Archaeological Resources Protection Act of 1979 (ARPA) (16 U.S.C. §470 aa-mm)
- Archeological and Historic Preservation Act of 1974 (AHPA) (16 U.S.C. §469)
- Federal Cave Resource Protection Act of 1988 (16 U.S.C. §4301)
- National Trails System Act of 1968, as amended (16 U.S.C. §§1241-1249)
- Native American Graves Protection and Repatriation Act of 1990 (NAGPRA) (25 U.S.C. §3001)
- Executive Order 11593, Protection and Enhancement of the Cultural Environment
- Executive Order 13007, Indian Sacred Sites
- Executive Order 13175, Consultation and Coordination with Indian Tribal Governments
- Executive Order 13287, Preserve America
- Wyoming Antiquities Act of 1935 (Wyoming Statutes [WS] 35-1-114 to 116)
- Wyoming State Archaeologist Statute, 1967 (WS 36-4-106)
- Colorado Historical, Prehistorical, and Archaeological Resources Act of 1973 (Colorado Revised Statutes [CRS] 24-80-401 to 410)
- Colorado Unmarked Human Graves (CRS 24-80-1301 to 1305)
- Utah State Antiquities Act (Utah Code Annotated [UCA] 9-8-301 to 308)
- Utah Native American Grave Protection and Repatriation Act (UCA R456-1-1 to 17)
- Utah Heritage and Arts, History (UCA Title R455)
- Utah Protection of Human Remains (UCA 76-9-704)
- Utah Ancient human remains on nonfederal lands that area not state lands (UCA 9-8-309)
- Utah Archaeological Vandalism Statutes 76-6-901, 76-6-902, 76-6-903
- Nevada Preservation of Prehistoric and Historic Sites (Nevada Revised Statutes [NRS] 381.195 to 381.227)
- Nevada Protection of Indian Burial Sites (NRS 383.150, NRS 383.190)
- Nevada Protection of Historic and Prehistoric Sites (NRS 383,400-440)

APPENDIX E
FRAMEWORK DUST CONTROL AND AIR QUALITY PLAN

TABLE OF CONTENTS

E1.0 INTRODUCTION 1

E2.0 PLAN PURPOSE 1

E3.0 PLAN UPDATES 1

E4.0 REGULATORY 1

E4.1 FEDERAL PERMITS 1
E4.2 STATE PERMITS 2
E4.3 LOCAL PERMITS 2

E5.0 AIR QUALITY AND DUST CONTROL 2

E6.0 DESIGN FEATURES AND BEST MANAGEMENT PRACTICES 3

ACRONYMS

Applicant	TransWest Express LLC, also TransWest
BLM	Bureau of Land Management
BMP	Best Management Practice
CFR	Code of Federal Regulations
COM Plan	Construction, Operation, and Maintenance Plan
CWA	Clean Water Act
DEIS	Draft Environmental Impact Statement
EPA	United States Environmental Protection Agency
FLPMA	Federal Land Policy and Management Act of 1976
mph	miles per hour
NDEP	Nevada Division of Environmental Protection
NPDES	National Pollutant Discharge Elimination System
NTP	Notice to Proceed
Plan	Dust Control and Air Quality Plan
POD	Plan of Development
Project	TransWest Express Transmission Project, also TWE Project
ROD	Record of Decision
ROW	right-of-way
SWPPP	Stormwater Pollution Prevention Plan
TransWest	TransWest Express LLC, also Applicant
TWE Project	TransWest Express Transmission Project, also Project
U.S.C.	United States Code
USACE	United States Army Corps of Engineers
WDEQ	Wyoming Department of Environmental Quality

E1.0 INTRODUCTION

This framework Dust Control and Air Quality Plan (Plan) to be implemented by TransWest Express LLC (TransWest or Applicant) and its Construction Contractor(s) addresses regulatory compliance, environmental concerns, mitigation recommendations, and monitoring. This Plan will be utilized for the construction of the TransWest Express Transmission Project (TWE Project or Project) to ensure impacts associated with construction activities are minimized as they relate to soil conservation and air quality.

E2.0 PLAN PURPOSE

This Plan provides measures to be utilized by TransWest and its Construction Contractor(s) to ensure protection of the soils and air quality that will be affected by the Project. This Plan is to be implemented during the construction, operation, and maintenance phases of the Project. These measures are intended to: 1) address soil erosion and sedimentation; and 2) minimize dust and air emissions from construction-related activities. This document provides direction for the detailed final Dust Control and Air Quality Plan to be developed by the Construction Contractor(s).

E3.0 PLAN UPDATES

This Plan will be updated for the Record of Decision (ROD) Plan of Development (POD) based on the selected Agency Preferred Alternative and preliminary engineering and design. Mitigation measures will also be updated if required. The Plan for the Notice to Proceed (NTP) POD will include updates as required based on final design and engineering. The Construction Contractor(s) will be responsible for preparing and implementing the final Plan in compliance with all local, state, and federal regulations pertaining to air quality.

E4.0 REGULATORY

Construction, operation, and maintenance activities for the Project are subject to various regulations designed to protect environmental resources and the public from erosion, dust, and other possible effects to air quality. The following federal, state and local permits and documents are required for preventing accelerated erosion and minimizing dust and air emissions. These documents should be referred to along with this Plan, when assessing which mitigation measures are appropriate for a specific area. At a minimum, TransWest and the Construction Contractor(s) will need to adhere to or obtain the following permits, as applicable:

E4.1 Federal Permits

- BLM – Right-of-way (ROW) grant and temporary use permit: Federal Land Policy and Management Act of 1976 (FLPMA) (Public Law 94-579); 43 United States Code (U.S.C.) §§1761-1771; 43 Code of Federal Regulations (CFR) Part 2800

- U.S. Forest Service (USFS) special use authorization or easement: 36 CFR Part 251

- U.S. Army Corps of Engineers (USACE) – Clean Water Act (CWA), Section 401: CWA (33 U.S.C. §1344)

- U.S. Environmental Protection Agency (EPA) National Pollutant Discharge Elimination System (NPDES) Construction General Permit

E4.2 State Permits

- Wyoming Department of Environmental Quality (WDEQ) – Air Quality Division Construction Permit to control fugitive dust emissions during construction.
- WDEQ – Sections 401, 402, and 404, CWA, Water Quality Certification (State implementation of the USACE permits for water quality and stormwater discharges).
- Colorado Department of Public Health and Environment, Water Quality Control Division- Stormwater Permit.
- Utah Department of Environmental Quality, Air Quality Board- Notice of Construction.
- Nevada Division of Environmental Protection (NDEP) - Stormwater Pollution Prevention Plan (SWPPP), Water Quality Certification.
- NDEP Bureau of Air Pollution Control - Authority to construct, permit to operate.

E4.3 Local Permits

- Clark County, Department of Air Quality and Environmental Management - Dust Control Permit, Stationary Source Permit.
- County conditional use permits, temporary use permits for staging areas, road crossing permits and/or encroachment permits. May have erosion or air quality considerations. Requirements vary by county.

E5.0 AIR QUALITY AND DUST CONTROL

Soil conservation for the Project includes minimizing impacts that will affect soils from the construction and operation of the Project, such as minimizing wind and water erosion, surface disturbance, and construction activities in highly erodible soils. Erosion potential is the result of several factors including slope, vegetation cover, climate, and the physical and chemical characteristics of the soil. Increased soil erosion may occur when vegetation is removed during construction, or in areas where the surface is disturbed by heavy equipment. Wind is also an erosion factor throughout portions of the Project area.

Where disturbance is anticipated in areas of steep terrain with high potential for erosion, vegetation clearing and grading will be conducted in a manner to minimize these effects. Soil stabilization and reclamation practices will also be implemented to reduce erosion. In areas of soil disturbance or compaction (e.g., temporary work areas) soil treatment and reclamation will be implemented as directed in Appendix Q –Framework Reclamation Plan.

Construction of the Project may temporarily increase fugitive dust particularly in areas with high winds and fragile soils. Ambient levels of nitrogen oxides, hydrocarbons, and carbon monoxide near the construction zone may also be temporarily increased due to emissions from heavy construction equipment. Related facilities may cause a minimal increase in fugitive dust.

Air quality control measures are intended to minimize fugitive dust and air emissions, and to maintain conditions as free from air pollution where practical. All requirements of those entities having jurisdiction over air quality matters will be adhered to, and any permits needed for construction activities will be obtained. The Construction Contractor(s) will not proceed with any construction activities without taking

reasonable precautions to prevent excessive particulate matter from becoming airborne and creating nuisance conditions.

Excessive exhaust emissions from vehicles and heavy equipment will be prevented by proper maintenance, and no open burning of construction trash or other open fires will be allowed.

Where necessary, water may be used as Bureau of Land Management (BLM) approved dust control methods during construction, including the grading of roads or the clearing of vegetation in the ROW, and will be applied on unpaved roads, material stockpiles, and other surfaces, which can create airborne dust. Where application of water is not possible, material stockpiles will be enclosed or covered. In addition, open bodied trucks transporting materials likely to become airborne will be covered. Soil tracks or other materials that may become airborne will promptly be removed from paved roads. Techniques to minimize and control dust during rock blasting operations can be found in Appendix C – Blasting Plan Framework.

E6.0 DESIGN FEATURES AND BEST MANAGEMENT PRACTICES

In addition to applicable design and operational standards, regulations, laws and permit requirements, the following design features and Best Management Practices (BMPs) have been identified to avoid or minimize potential air quality related impacts. Note that the Construction, Operation and Maintenance Plan will be a part of the NTP POD.

TWE-21: The Applicant will obtain an NPDES from the USEPA prior to construction.

TWE-47: The Construction, Operation and Maintenance (COM) Plan will include a Dust Control and Air Quality Plan. Requirements of those entities having jurisdiction over air quality matters include ensuring the regulations are adhered to and dust control measures will be developed. Open burning of construction trash will not be allowed unless permitted by appropriate authorities.

TWE-48: The contractor and subcontractors will be required to have and use air emission control devices on construction machinery, as required by federal, state and local regulations or ordinances.

TWE-53: The COM Plan will include a Blasting Plan, which will identify methods and mitigation measures to minimize the effects of blasting, where applicable. The Blasting Plan will document the proposed methods to achieve the desired excavations; proposed methods for blasting warning; use of non-electrical blasting systems; and provisions for controlling fly rock, vibrations, and air blast damage.

Additional BMPs and Mitigation Measures identified in the Draft Environmental Impact Statement (DEIS) are listed below. The identified BMPs and Mitigation Measures have not been finalized at this time and may be updated, changed, or eliminated in future revisions of this Plan.

SS-7: The Dust Control and Air Quality Plan will include dust abatement measures to minimize impacts to special status plant species. This includes slower speed limits on unpaved roads, using gravel for roads in occupied habitat and avoidance areas, and the application of water for dust abatement.

SSS-1: (Water Use): No new surface water or groundwater withdrawals that are hydrologically connected to streams containing Colorado River cutthroat trout and Bonneville cutthroat trout would be allowed. Any water necessary for construction, operation, or maintenance (including dust abatement) would not be acquired from existing water sources.

AIR-1: The Applicant shall cover construction materials and stockpiled soils if these are sources of fugitive dust.

AIR-2: To minimize fugitive dust generation, the Applicant shall water land before and during surface clearing or excavation activities. Areas where blasting would occur should be covered with mats.

AIR-3: Dust abatement techniques (e.g., water spraying) shall be used by the Applicant on unpaved, unvegetated surfaces to minimize airborne dust. Water for dust abatement should be obtained and used by the Applicant under the appropriate state water use permitting system. Used oil will not be used for dust abatement.

AQ-1: In Region II, the Alternative B transmission line route passes within about 10 miles of Arches National Park. No concrete batch plants would be located within 30 miles of Arches National Park; therefore, concrete required for structure foundations should be acquired from local sources in the vicinity of Moab.

AQ-2: In Region III, the Proposed Action (Alternative A) passes within about 20 miles of Zion National Park. No concrete batch plants would be located within 30 miles of Zion National Park; therefore, concrete required for structure foundations should be acquired from local sources in the vicinity of Cedar City or St. George, Utah.

AQ-3: The Clark County nonattainment area is located in both Region III and Region IV. No new concrete batch plants are to be located within the nonattainment area; concrete required for structure foundations and other construction are to be acquired from existing local vendors.

PHS-1: The Applicant shall prepare an explosives use plan that specifies the times and meteorological conditions when explosives will be used and specifies minimum distances from sensitive vegetation and wildlife or streams and lakes.

The following dust and air control measures were identified in the main body of the DEIS.

- Predict future impacts from externally initiated actions prior to approval of those actions. Comply with all applicable local, state, and federal regulations to limit air quality degradation;
- Reduce vehicle speeds on native surfaced roads (e.g., 15 miles per hour [mph])
- Restrict surface disturbing activities to periods when wind speeds are less than 25 mph.
- To minimize fugitive dust, the Applicant shall cover, at all times when in motion, open bodied trucks, transporting materials likely to give rise to airborne dust; and

APPENDIX F
FRAMEWORK EMERGENCY PREPAREDNESS AND RESPONSE PLAN

TABLE OF CONTENTS

F1.0 INTRODUCTION 1
F2.0 PLAN PURPOSE 1
F3.0 PLAN UPDATES 1
F4.0 REGULATORY COMPLIANCE 1
F5.0 RESPONSIBILITIES 2
F6.0 RESPONSE COORDINATION 2
F7.0 EMERGENCY COMMUNICATIONS 2
F7.1 EMERGENCY CONTACT 2
F7.2 HAZARD IDENTIFICATIONS AND KEY RESPONSE CRITERIA 3

TABLES:

TABLE F1 EMERGENCY CONTACT LIST 3

ACRONYMS

ACGIH	American Conference of Industrial Hygienists
AMA	American Medical Association
ANSI	American National Standards Institute
Applicant	TransWest Express LLC, also TransWest
BLM	Bureau of Land Management
CIC	Compliance Inspection Contractor
CSA	Council on Scientific Affairs
NESC	National Electrical Safety Code
NTP	Notice to Proceed
OSHA	Occupational Safety and Health Administration
Plan	Emergency Preparedness and Response Plan
POD	Plan of Development
Project	TransWest Express Transmission Project, also TWE Project
ROD	Record of Decision
TransWest	TransWest Express LLC, also Applicant
TWE Project	TransWest Express Transmission Project, also Project

F1.0 INTRODUCTION

This framework Emergency Preparedness and Response Plan (Plan) provides an overview of methods to be implemented by TransWest Express LLC (TransWest or Applicant) and it Construction Contractor(s) if the need for emergency management is necessary during the construction and operation and maintenance of the TransWest Express Transmission Project (TWE Project or Project). This document discusses the existing support structure, chain of command, and emergency communication protocols to be used as a guide for a Plan to be completed by TransWest, and its Construction Contractor(s) and approved by the Bureau of Land Management (BLM). More specific emergency procedures for blasting, fire, and hazardous materials are included in Appendices C – Blasting Plan Framework, H– Fire Protection Plan, and L – Hazardous Materials Management Plan.

Emergency response procedures will be implemented for the following potential or similar events:

- Downed transmission lines, structures, or equipment failure
- Fires
- Sudden loss of power
- Natural disasters
- Serious personal injury

F2.0 PLAN PURPOSE

The purpose of the Emergency Preparedness and Response Plan is to provide clear procedures and information to enable TransWest, the Construction Contractor(s), the Compliance Inspection Contractor (CIC), and BLM Project Manager(s) to prepare for and effectively respond to emergency situations. The primary objective of this Plan is to prevent adverse impacts to human health and safety, property, and the environment that could potentially occur as a result of the construction, operation and maintenance of the TWE Project.

F3.0 PLAN UPDATES

This Plan will be updated for the Record of Decision (ROD) Plan of Development (POD) and will include appropriate mitigation measures to ensure safety and regulation compliance. The updated Plan for the Notice to Proceed (NTP) POD will include a complete emergency contact list. The Construction Contractor(s) will be responsible for preparing and implementing this Plan in compliance with all local, state, and federal regulations pertaining to emergency response.

F4.0 REGULATORY COMPLIANCE

Health and safety guidelines related to high-voltage transmission lines are provided by a number of sources, including the National Electric Safety Code (NESC), American National Standards Institute (ANSI), American Conference of Governmental Industrial Hygienists (ACGIH), American Medical Association (AMA), Council on Scientific Affairs (CSA), various state regulation and other organizations. In addition, the Occupational Safety and Health Administration (OSHA) provides regulations for construction activities.

F5.0 RESPONSIBILITIES

TransWest and the Construction Contractor(s) are responsible for the effective response to any emergency situation or event related to the construction, operation and maintenance of the TWE Project. To ensure a coordinated and effective response, a chain of command will be developed as part of this Plan and followed in the event of an emergency.

In the establishment of a chain of command, considerations such as the level of activation and the participation necessary to respond to specific situations are to be taken into account. The following are factors for the establishment of a chain of command:

- Type of event (natural, environmental, electrical supply/outage, external forces)
- Severity and geographic area (multiple or combination of events)
- Anticipated duration
- Multi-division/discipline response required
- External agency coordination

F6.0 RESPONSE COORDINATION

The amount of resources and coordination required for response to a specific hazard or emergency is determined by type, severity, location and duration of the event. Most events require managing at the field operations level and will require increasing resource requirements to match the severity and duration of the event. This emergency management organization will be included as part of this Plan and will provide increasing levels of resources and the coordination necessary to support immediate or escalating emergency events.

In the event of an emergency, crews will be dispatched quickly to repair or replace any damaged equipment. Public health and safety and the health and safety of workers will have priority under emergency conditions. Repair of the transmission line and restoration of electric service is a public health and safety concern and will proceed as rapidly as possible under the circumstances. All reasonable efforts will be made to protect plants, wildlife and other resources. Reclamation procedures following completion of repair work will be similar to those prescribed during construction.

F7.0 EMERGENCY COMMUNICATIONS

Effective communication and exchange of information is essential in every emergency response. Misdirected, incorrect, or untimely information can be detrimental and can increase the threat to life or property. As an emergency event escalates, the rapid increase of information creates chaos and confusion. Simple communication diagrams can help alleviate this situation and will be developed as part of the final Plan.

F7.1 Emergency Contact

IN CASE OF EMERGENCY, ON-SITE PERSONNEL WILL CALL 911 FIRST. Additional potential emergency contacts are listed in Table F1 and should be called as appropriate, depending on the situation (e.g., fire, personal injury). The emergency contacts in Table F1 will be populated for the NTP POD when the selected Agency Preferred Alternative is identified. Further guidance on

emergency response, notification and reporting protocols are included in Appendices C – Blasting Plan, H – Fire Protection Plan, and L – Hazardous Materials Management Plan.

This emergency contact list shall be verified at the beginning of construction and updated throughout the Project by the Construction Contractor(s) to ensure accurate contact information.

TABLE F1 EMERGENCY CONTACT LIST

IN CASE OF EMERGENCY, CALL 911		
Fire – Call 911 first		
Counties: Primary Contact: TBD Secondary Contact: TBD	BLM Field Offices: TBD USFS Ranger Districts: TBD	State Interagency Fire Centers: TBD
Law Enforcement		
County Sheriffs: TBD	State Highway Patrol: TBD	
Poison Control		
National/State Poison Control Centers: TBD		
Hospitals and Clinics		
County and Municipal as Applicable: TBD		
Hazardous Spill Response and Notification – Call 911 After 911 notification, the following mandatory notifications will be made by the Compliance Inspection Contractor. Select and notify the appropriate government agencies based on geographic location of the spill site. Also see Appendix L – Hazardous Materials Management Plan		
Counties: TBD	State Divisions of Emergency Services and Homeland Security: TBD	National Response Center: TBD
State Departments of Environmental Quality: TBD		
Other Numbers		
County Fire Dispatch: TBD	BLM Authorized Officer or Representative: TBD	Construction Contractor Manager: TBD

F7.2 Hazard Identifications and Key Response Criteria

Construction activities for the Project can pose potential hazards or threats. The most effective response to any situation is awareness of the hazard, its potential effects and consequences, and an understanding of the resources and actions necessary to respond. Listing all the potential hazards and a detailed each response is not appropriated for this Plan. Reponses to different events may vary as the event evolves, but reasonable response methods and responsibilities will be determined in future updates to this Plan. Scenarios that may be considered are electrocution, fatality, massive equipment failure, structure failure, weather, environmental, etc.

APPENDIX G
FRAMEWORK ENVIRONMENTAL COMPLIANCE AND MONITORING PLAN

TABLE OF CONTENTS

G1.0 INTRODUCTION 1

G2.0 PLAN PURPOSE 1

G3.0 PLAN UPDATES 2

G4.0 ROLES AND RESPONSIBILITIES 2

G4.1 BUREAU OF LAND MANAGEMENT AND OTHER FEDERAL AGENCIES 2
G4.2 COMPLIANCE INSPECTION CONTRACTOR 3
G4.3 TRANSWEST 4
G4.4 CONSTRUCTION CONTRACTOR(S) 4
G4.5 ENVIRONMENTAL INSPECTORS AND MONITORS 5

G5.0 PROCEDURES 5

G5.1 COMPLIANCE LEVELS 5
G5.1.1 Acceptable 6
G5.1.2 Problem Area 6
G5.1.3 Non-Compliance 6
G5.2 RESPONSES TO NON-COMPLIANCE 6
G5.3 VARIANCES 7

G6.0 COMMUNICATIONS 8

G7.0 TRAINING 9

G8.0 REPORTING AND DOCUMENTATION 9

G9.0 PROJECT CLOSEOUT 9

ATTACHMENTS

ATTACHMENT A NON-COMPLIANCE REPORT 11
ATTACHMENT B VARIANCE REQUEST FORM 12

ACRONYMS

Applicant	TransWest Express LLC, also TransWest
BLM	Bureau of Land Management
CFR	Code of Federal Regulations
CIC	Compliance Inspection Contractor
ECMP	Environmental Compliance and Monitoring Plan, also Plan
EMM	Environmental Mitigation Measure
FEIS	Final Environmental Impact Statement
NTP	Notice to Proceed
Plan	Environmental Compliance and Monitoring Plan, also ECMP
POD	Plan of Development
Project	TransWest Express Transmission Project, also TWE Project
Reclamation	Bureau of Reclamation
ROD	Record of Decision
ROW	right-of-way
TransWest	TransWest Express LLC, also Applicant
TWE Project	TransWest Express Transmission Project, also Project
USFS	United States Forest Service
Western	Western Area Power Administration
WSO	Work Stoppage Order

G1.0 INTRODUCTION

This framework Environmental Compliance and Monitoring Plan (ECMP or Plan) provides an overview of how TransWest Express LLC (TransWest or Applicant) will manage compliance with all laws, regulations and agreements related to the TransWest Express Transmission Project (TWE Project or Project). This Plan may be updated, revised and changed as roles and responsibilities are further refined during the Project development process. More specifically, this Plan may be revised and changed following the issuance of the Records of Decision (RODs) for the Project by the Bureau of Land Management (BLM) and Western Area Power Administration (Western).

The BLM, the U.S. Forest Service (USFS), the Bureau of Reclamation (Reclamation) and other federal agencies issuing right-of-way (ROW) grants or special use authorizations on federal lands will be responsible for enforcement of the terms and conditions of those grants and authorizations. As the lead federal land management agency during construction of the Project, the BLM will engage a third-party Compliance Inspection Contractor (CIC) to act on behalf of the federal land management agencies to provide construction oversight and monitor compliance with the terms and conditions of the federal grants and authorizations.

G2.0 PLAN PURPOSE

The ECMP is the primary guide for documentation and management of compliance with the federal grants and authorizations for the Project. This ECMP contains information on the following items:

- Roles and responsibilities of the Compliance Team
- Procedures for assessing Project compliance and process for implementing corrective actions
- Procedures for submitting, evaluating, and approving/denying variance requests
- Communications
- Training
- Reporting and documentation
- Project closeout

Because there is the potential for the Project to affect sensitive environmental resources, environmental mitigation measures (EMMs) have been developed to minimize potential impacts on these resources. The ECMP is intended to be a guidance document to facilitate compliance and the effective implementation of EMMs. As needed, the ECMP will be updated and revised.

As mentioned above, a third party CIC will be engaged by the BLM to enforce terms and conditions of the federal grants and authorizations. The CIC will be responsible for assuring that the Notice to Proceed (NTP) Plan of Development (POD) and all associated permitting documents have been distributed to the Compliance Team for their review prior to construction being initiated. The CIC will also review all environmental requirements with key construction managers and environmental monitors at the initial construction kickoff meeting. At that time a document control system, which may be used to manage the submittal and distribution of Project compliance information and documentation, may be presented and demonstrated. Environmental inspectors and monitors will also be retained by TransWest and/or by the Construction Contractor(s) to implement EMMs, provide specific resource monitoring, and to prepare daily reports on those construction activities monitored.

G3.0 PLAN UPDATES

This ECMP will be updated for the ROD POD to include more specifically defined roles, responsibilities and procedures. The NTP POD will be completed by TransWest and will include fully defined roles, responsibilities and procedures as agreed to by TransWest and the federal agencies.

G4.0 ROLES AND RESPONSIBILITIES

The following section describes the roles and responsibilities of the Compliance Team in executing the ECMP and describes their reporting relationships (Figure 3-1 to be developed for ROD POD). The Compliance Team includes the BLM and other federal agencies, CIC, TransWest, Construction Contractor(s), and Environmental inspectors and monitors. Subject to the requirements of the site health and safety plan, the Compliance Monitoring Team shall have access to all Project work areas to inspect construction and reclamation activities in accordance with the terms and conditions of the federal grants and authorizations. Access to work areas will not be unreasonably withheld provided that the members of the Compliance Monitoring Team have received all required safety training necessary to enter the work area.

G4.1 Bureau of Land Management and Other Federal Agencies

The role of the BLM and other federal agencies is to ensure that all stipulations and requirements of the federal grants and authorizations are implemented and complied with during the construction, operation, and maintenance of the Project. Oversight will be provided by both federal Authorized Officers and by Project Managers for each federal agency. Authorized Officers will have ultimate authority and be the decision makers for issues pertaining to ROW grants and authorizations. The Authorized Officers will supervise the federal Project Managers to verify that environmental compliance is meeting the requirements of all applicable laws, permits, regulations, and agreements. The Authorized Officers, in coordination with others, will determine if noncompliance events for which TransWest is accountable qualify as violations to the terms and conditions of any ROW grant or authorization. Only the Authorized Officers, in accordance with 43 Code of Federal Regulations (CFR) Part 2807 and 36 CFR Part 251.60, will have the authority to suspend or terminate a ROW grant or authorization if TransWest and/or its Construction Contractor(s) do not comply with their stipulations, conditions, or with other applicable laws and regulations. The Authorized Officers will be the primary federal agent to issue decisions unless otherwise delegated to a federal Project Manager.

Federal Project Managers will be primarily responsible for enforcing TransWest's day-to-day compliance with environmental laws and regulations, the POD, and all stipulations and conditions of the federal grants and authorizations. They will ensure that compliance during construction is done in a manner which facilitates timely and efficient construction while protecting the public interest and the environment. They will also be responsible for ensuring that environmental impacts do not exceed those analyzed in the Final EIS and will manage the third-party CIC. Federal Project Managers will coordinate with agency resource specialists for their technical expertise and input when needed. Federal Project Managers will be responsible for notifying TransWest of any grant or authorization violations due to noncompliance, issuing work stoppage orders (WSOs) if needed, issuing work continuation notices (or lifting work stoppage orders) and enforcing corrective actions as needed. Non-compliance will be reported to the appropriate Authorized Officer(s). Each federal Project Manager will be responsible for maintaining an accurate and complete administrative record for their respective agency.

All Level 2 or Level 3 variance requests described in Section G5.3 below, will require approval by either the appropriate federal Project Manager or Authorized Officer.

G4.2 Compliance Inspection Contractor

TransWest and the federal agencies will agree to use of a third-party CIC to act on the BLM and other federal agencies' behalf to ensure adequate oversight during the construction and reclamation phases of the Project. The CIC will report directly to each federal Project Manager and will be authorized to enforce the stipulations of the federal grants and authorizations. It is not the role of the CIC to direct the work of either TransWest or its Construction Contractor(s). Rather the CIC's primary role is to observe work activities and bring non-compliant situations to the attention of the appropriate party and offer recommendations on how to prevent or rectify non-compliance. Additional responsibilities of the CIC include:

- Track all Project construction disturbance by type and jurisdiction during inspections, for inclusion in an End of Construction Project Report.
- Report if construction disturbance exceeds levels analyzed in the Final Environmental Impact Statement (FEIS).
- Prepare and maintain a project compliance contact list containing the names, titles, phone numbers and email addresses of all federal Authorized Officers and federal Project Managers, TransWest Project Managers, Construction Contractor(s) field supervisors and construction managers, environmental inspectors, monitors and any other individuals or agencies who will be involved with environmental compliance for the Project.
- Participate in pre-construction meetings, safety meetings, safety training, environmental training and other meetings attended by the BLM, TransWest, and Construction Contractor(s) as appropriate that involve environmental compliance aspects of the Project.
- Prepare and distribute weekly summary report.
- Review all applicable environmental documents and requirements, including the FEIS, ROD, PODs, ROW grants, and special use authorizations.
- Maintain a complete copy of the NTP POD and associated environmental documents while in the field.
- Verify that construction occurs as outlined in the NTP POD, FEIS, ROD, ROW grants, special use authorizations, and NTPs.
- Perform compliance monitoring in areas of active construction or reclamation.
- Maintain records that assure all required environmental training of construction personnel has been conducted.
- Respond to inquiries by TransWest or its Construction Contractor(s) concerning environmental compliance.
- Discuss any potential compliance issues with Construction Contractor(s), environmental inspectors, and environmental monitors.
- Provide recommendations to federal Project Managers on ways to resolve or prevent non-compliance.
- At a minimum, meet weekly with the federal Project Managers (or designees), in person or by telephone, to review status of construction and compliance.

- Meet with TransWest and Construction Contractor(s) project managers, construction managers, environmental inspectors, or environmental monitors as needed.
- Support and coordinate the preparation, submittal, and review of all variance requests.
- Approve or deny Level 1 variance requests described below.
- Participate in and support Project safety.
- Work with TransWest and Construction Contractor(s) to support the Project's safe, timely, and effective construction.
- If warranted, issue an immediate temporary suspension or WSOs for any construction activity determined to be in non-compliance.
- As warranted, rescind any temporary suspension or WSOs in a timely fashion following determination that non-compliance issue has been adequately addressed.
- Conduct field reviews and inspections with agency personnel as needed.
- Conduct a final route review and prepare End of Construction Project Report documenting the status of the ROW and the final amount of construction disturbance.
- Document completion of all reclamation activities (excluding reclamation monitoring).
- Document instances of non-compliance through mapping and photography and complete non-compliance report.
- Review environmental inspector and environmental monitor daily logs.
- Prepare meeting notes that highlight any decisions made during key project meetings.

The CIC will deploy an adequate number of field personnel to sufficiently monitor construction activities and fulfill the responsibilities listed above. It is important to note that it is not the role of the CIC to direct work of either TransWest or the Construction Contractor(s).

G4.3 TransWest

TransWest will be the holder of all ROW grants, authorizations, and easements, both public and private. As such, TransWest is ultimately accountable for adherence to the environmental permit requirements and is responsible for ensuring that environmental impacts do not exceed those analyzed in the FEIS and approved in the ROD. To facilitate this goal, TransWest will employ environmental inspectors and monitors who will work with the Construction Contractor(s) and will support the efforts of the CIC. TransWest will also maintain regular and consistent communication with the Construction Contractor(s) to track the success of environmental protection, mitigation, and compliance efforts before, during, and after construction. TransWest is responsible for assuring that all instances of non-compliance are corrected.

G4.4 Construction Contractor(s)

As part of TransWest's commitment to environmental compliance, the Construction Contractor(s) will be contractually bound to comply with all relevant laws, regulations, and permits, including the ECMP, POD, EMMs, and other specific stipulations set forth in the federal grants and authorizations. All construction personnel and employees entering work areas will be required to participate in environmental training before starting work. Construction crews will also be required to cooperate and support the work of the Compliance Team to build the Project safely and in compliance with all terms and conditions; federal, state, and local laws and regulations; and all landowner agreements. If

a non-compliance event occurs, it will be the responsibility of the Construction Contractor(s) to notify TransWest and the CIC and to cooperate fully in developing and implementing a solution as soon as possible to resolve the non-compliance. The Construction Contractor(s) will be expected to involve the CIC in key Project management meetings and the Project safety program.

G4.5 Environmental Inspectors and Monitors

TransWest and its Construction Contractor(s) will employ a team of environmental inspectors and monitors to monitor compliance with the federal grants and authorizations. The duties and responsibilities of the environmental inspectors and monitors will include:

- Daily inspections and monitoring of construction activities as required.
- Coordinate and communicate with the CIC.
- Support and participate in field inspections by federal agency personnel as needed.
- Deliver environmental training and provide CIC with a current list of all personnel who have received training.
- Confirm on the ground the location of sensitive resources and areas of concern prior to construction activities commencing.
- Verify that construction work areas, access roads, and sensitive resources or areas of concern have been properly marked and flagged prior to work commencing in those areas.
- Communicate and coordinate with construction crews and act as a resource to explain environmental regulations and requirements.
- Attend safety meetings.
- Prepare daily logs/reports to be provided to the CIC.
- Support the preparation of variance requests and review by the federal agencies and CIC.
- Inform Construction Contractor(s) and CIC of all potential and existing compliance issues and support implementation of corrective actions.
- Stop-work authority when construction activities violate the environmental conditions of the federal grants and authorizations or when sensitive resources are threatened.
- Participate in and support the implementation of corrective actions for non-compliance violations.
- Monitor, inspect, and document reclamation and revegetation activities as needed.

G5.0 PROCEDURES

This section describes the procedures that will be followed to assess compliance levels, responses to non-compliance, and for the submittal, review, and tracking of variance requests.

G5.1 Compliance Levels

Each separate activity that is inspected and documented in a daily report will be assigned one of the following compliance levels:

- Acceptable

- Problem area
- Non-compliance

Environmental inspectors, monitors, and the CIC will assess potential non-compliant activities based on the extent and nature of actual impacts on a resource, the potential for additional impacts on a resource, the intent behind the action, and the history of the occurrence. Failure by TransWest or the Construction Contractor(s) to disclose in a timely manner or accurately characterize an impact will result in an automatic non-compliance and temporary suspension of work in the area where the impact has occurred. Each compliance level is described below.

G5.1.1 Acceptable

All activities that are in compliance with the Project's federal grants and authorizations will be documented as acceptable.

G5.1.2 Problem Area

A problem area is a location or activity that does not meet the definition of acceptable but no impacts to sensitive resources have occurred. Examples include:

- An incident that is accidental or unforeseeable, where no sensitive resources were damaged, is reported in a timely manner, and is repaired quickly.
- A location where the CIC, environmental inspector, or monitor has determined that damage to a sensitive resource could occur if corrective actions are not taken.
- Implementation of mitigation measures is occurring too slowly to be fully effective.

The Construction Contractor(s) will be notified of the problem area and it will be documented in the daily report, as well as the corrective actions that will be applied. If a problem area is corrected in a timely manner it will not be considered non-compliance. If a problem area is found to be a repeat situation, or has happened in multiple locations, or is not corrected within an agreed upon timeframe, the CIC, environmental inspector, or monitor may document the situation as non-compliance.

G5.1.3 Non-Compliance

Non-compliance occurs when one or more of the following take place:

- Requirements or stipulations contained within the Project's federal grants or authorizations are not followed or implemented properly.
- Damage to sensitive resources has occurred.
- Problem areas consistently reoccur and threaten sensitive resources.
- Corrective actions for problem areas are not implemented.
- Construction Contractor(s) display direct disregard for Project requirements.

G5.2 Responses to Non-Compliance

Depending on the circumstances of the non-compliance and if sensitive resources are threatened, the CIC may orally issue a temporary suspension of construction activities within a localized area. All non-compliance will be documented in a non-compliance report (see Attachment A). The non-compliance report will be prepared by the CIC based on personal observations or information

provided by the environmental inspectors, monitors or other parties. In all cases when non-compliance occur the CIC will be informed immediately.

Once prepared, the CIC will provide a copy of the non-compliance report to TransWest, the Construction Contractor(s), and the applicable federal Project Manager(s). Upon review, the appropriate federal Project Manager(s), in consultation with the Authorized Officer as needed, will direct the CIC to take one or more of the following actions:

- Work with the Construction Contractor(s) and TransWest to develop a written plan to address the cause of the non-compliance and actions to avoid its reoccurrence.
- Work with the Construction Contractor and TransWest to develop a written plan to repair any impacts to resources.
- Issue a temporary suspension to halt specific activities or all activities within in a localized work area.
- Issuance of a WSO to temporarily suspend all activities within a given construction area of the Project (requires written authorization by either the federal Project Manager or the Authorized Officer).
- ROW grant or authorization suspension (requires written authorization by the Authorized Officer).
- ROW grant or authorization termination (requires written authorization by the Authorized Officer).

In cases where construction activities have been halted, TransWest, the Construction Contractor(s), appropriate federal Project Manager (s), and the CIC will meet to discuss the corrective actions that must be implemented before work will be allowed to resume. Prior to any ROW grant or authorization suspension or termination, TransWest will be notified in writing and allowed a reasonable opportunity to correct any non-compliance pursuant to 43 CFR Part 2807.18(a), and if applicable, provided a hearing pursuant to 43 CFR Part 2807.18(b) and 36 CFR Part 251.

G5.3 Variances

It is expected that during the construction of the TWE Project circumstances will arise requiring a change, or variance, in how the Project will be constructed, or how mitigation measures or stipulations will be implemented. Under such circumstances TransWest will follow the procedures for variances, exceptions and modifications set forth in the applicable BLM Resource Management Plan. Where such procedures are not described in detail, TransWest will follow the procedures described in this ECMP.

The first step in the variance process is the preparation of a variance request form (see Attachment B). It is important that the form is complete, accurate, and contains sufficient information for the CIC and agency to adequately assess the request and reach a decision on its approval or denial. The Construction Contractor(s) will be responsible for preparing the request with the prior approval of TransWest.

A completed variance request form, with any required attachments, will be submitted to the CIC in electronic format. The CIC will conduct an initial assessment of the request for completeness and will determine a variance level based on the following definitions:

- Level 1: minor field adjustment within an approved/granted area that was previously analyzed in the Project's environmental documents, does not result in greater impacts to resources, and does not result in an increase in the estimated acres of disturbance contained in the FEIS or NTP POD.
- Level 2: changes in procedures or adjustments located outside of an approved/granted work area but still within an area analyzed in the Project's environmental documents, do not result in greater impacts to resources, and does not result in an increase in the estimated acres of disturbance contained in the FEIS or NTP POD.
- Level 3: changes in procedures or adjustment located outside of an approved/granted work area and outside area analyzed in the Project's environmental documents, results in greater impacts to resources, and/or results in an increase in the estimated acres of disturbance contained in the FEIS or NTP POD.

Incomplete or inadequate submittals will be returned within 24 hours with an explanation. Level 1 variance requests will be approved, approved with conditions, or denied by the CIC within 48 hours. Level 2 variance requests will be forwarded on to the appropriate federal Project Manager and will be approved, approved with conditions, or denied within a specified time to be determined. If denied, the federal Project Manager will provide a written explanation for the denial. Level 3 variances will be forwarded to the appropriate federal Project Manager and Authorized Officer. The timeframe for approval or denial of a Level 3 variance will depend on the scope of any additional studies and consultations that may be required and will take place within a specified time to be determined. If denied the Authorized Officer or federal Project Manager will provide a written explanation for the denial.

The CIC will be responsible for tracking all variance requests and will provide a summary of these in the End of Construction Project Report.

G6.0 COMMUNICATIONS

Effective communication and the sharing of information between the Compliance Team will be critical to achieving and maintaining environmental compliance throughout the construction of the Project. It is especially important for construction crews to communicate daily with environmental monitors concerning work schedules and locations. The Construction Contractor(s), CIC, environmental inspectors and monitors will maintain a communications network that consists of two-way radios and/or cellular phones. The Construction Contractors(s) will be responsible for assuring that field crews have the ability to communicate effectively and will implement solutions if communication problems arise.

Given the scope and complexity of the Project, it is critical that all communications involving key decisions, safety, approvals, non-compliance, or variances be documented in writing. Oral communication will not substitute for written approvals.

The CIC will be responsible for developing and maintaining a Project compliance contact list containing the names, titles, phone numbers and email addresses of all agency Authorized Officers, federal Project Managers, TransWest project managers, Construction Contractor(s) field supervisors and construction managers, environmental inspectors, monitors and any other individuals or agency personnel who will be involved with environmental compliance for the Project. The CIC will also be responsible for developing appropriate distribution lists for weekly compliance reports, non-compliance notifications, and variance requests.

The Construction Contractor(s) will hold daily morning meetings that will include the CIC or the CIC's compliance monitors, environmental inspectors and monitors to review the day's construction activities, discuss safety, and if needed discuss any compliance problem areas. The Construction Contractor(s) will also schedule periodic meetings with the CIC, lead environmental staff, and construction managers to discuss such topics as safety, communication, compliance, schedule, staffing, or other issues related to keeping the Project safe, on schedule, and in compliance.

G7.0 TRAINING

All personnel, including agency personnel, entering work areas are required to receive environmental and safety training prior to entering. Safety training will be provided by the Construction Contractor(s) following the requirements found in the Health and Safety Plan (Appendix M).

Environmental training will be provided by environmental inspectors and/or monitors. Training will emphasize compliance with all Project-wide environmental requirements including stipulations in the ROW grant, special use authorizations, NTP POD, and NTP(s). Requirements pertaining to a particular construction spread, such as requirements for the protection of threatened and endangered species or cultural resources, will be addressed as necessary. Roles and responsibilities will be reviewed and the authority of the CIC, environmental inspectors, and monitors will be emphasized.

The CIC will be provided with a list of all personnel who successfully completed the environmental training. Each trainee will receive proof of certification that must be carried at all times. At the discretion of the CIC, they may ask any personnel on the ROW to produce their training certification card. Any personnel present in work area that is found to have not gone through the training will result in non-compliance. The individual will be required to leave the work area immediately and will not be allowed back onto the Project until training has been completed.

G8.0 REPORTING AND DOCUMENTATION

Effective management of the Project will require the completion of multiple forms and reports to be submitted on a regular basis during the course of construction. These will include:

- Daily inspection reports
- Weekly compliance reports
- End of Construction Project Report
- Non-compliance report
- Variance request forms
- Environmental training list

The CIC will be responsible for compiling and distributing these reports to the appropriate federal Project Managers. The federal Project Managers will be responsible for assuring that documents are incorporated into the official administrative record for the Project.

G9.0 PROJECT CLOSEOUT

Once all construction has been completed, the Project energized, and reclamation activities completed, the CIC will coordinate final on-the-ground inspections with the federal Project Managers. The purpose of these final inspections will be to document compliance with the requirements contained within the ROW Preparation and Vegetation Management Plan (Appendix R)

and the Reclamation Plan (Appendix Q). After the inspections are completed, the federal Project Managers will determine if any further work is required. If no further work is required, the CIC will prepare the End of Construction Project Report.

The End of Construction Project Report will contain the following information:

- Record of final reports and documentation.
- Number of days of construction.
- Number of CIC monitors employed.
- Number of environmental inspectors and monitors employed.
- Number of personnel who received environmental training.
- Number of safety incidents that occurred during construction.
- Final acres of permanent and temporary disturbance compared to amounts contained in the FEIS and POD.
- Number of non-compliance reports issued.
- A summary of causes for non-compliance.
- A summary of corrective actions taken for non-compliance.
- Number and duration of temporary suspensions of construction activities.
- Number and duration of WSOs.
- Number of variances submitted, approved, and denied.
- A summary of special status animals or plants taken (including number of captures, displacements, mortalities, injuries, or harassment).
- Overall assessment of Construction Contractor(s) support of and compliance with requirements.
- A summary of lessons learned that could be applied to future projects.

Once the report is drafted, the CIC will coordinate a construction closeout meeting with the Compliance Team. At this meeting the End of Construction Project Report will be reviewed to ensure that all requirements have been met and any issues have been satisfactorily resolved. If no further actions are needed the work of the CIC will be deemed complete and the post-construction reclamation monitoring period will begin, as described in the Reclamation Plan (Appendix Q).

ATTACHMENT A
NON-COMPLIANCE REPORT

To be determined.

ATTACHMENT B
VARIANCE REQUEST FORM

To be determined.

APPENDIX H
FRAMEWORK FIRE PROTECTION PLAN

TABLE OF CONTENTS

H1.0 INTRODUCTION 1

H2.0 PLAN PURPOSE 1

H3.0 PLAN UPDATES 1

H4.0 REGULATORY 1

H4.1 WYOMING'S WILDFIRE PROTECTION SYSTEM 1
H4.2 COLORADO'S WILDFIRE PROTECTION SYSTEM 1
H4.3 UTAH'S WILDFIRE PROTECTION SYSTEM 2
H4.4 NEVADA'S WILDFIRE PROTECTION SYSTEM 2

H5.0 FIRE PROTECTION PLAN CONTENTS 2

H6.0 FIRE PREVENTION PLAN GUIDANCE 3

H7.0 DESIGN FEATURES AND BEST MANAGEMENT PRACTICES 3

ACRONYMS

Applicant	TransWest Express LLC, also TransWest
BLM	Bureau of Land Management
BMP	Best Management Practice
CFR	Code of Federal Regulations
CIC	Compliance Inspection Contractor
COM Plan	Construction, Operation, and Maintenance Plan
DEIS	Draft Environmental Impact Statement
EMF	Electromagnetic Field
NESC	National Electrical Stately Code
NIFC	National Interagency Fire Center
NTP	Notice to Proceed
OSHA	Occupational Safety and Health Administration
Plan	Fire Protection Plan
POD	Plan of Development
Project	TransWest Express Transmission Project, also TWE Project
ROW	right-of-way
TransWest	TransWest Express LLC, also Applicant
TWE Project	TransWest Express Transmission Project, also Project
USFS	United Stated Forest Service
WSFD	Wyoming State Forestry Division

H1.0 INTRODUCTION

This framework Fire Protection Plan (Plan) describes the measures to be taken by TransWest Express LLC's (TransWest or Applicant) and its Construction Contractor(s) to ensure fire prevention and suppression measures are carried out in accordance with federal, state, and local regulations for the TransWest Express Transmission Project (TWE Project or Project). Measures identified in this Plan apply to work within the Project area defined as the right-of-way (ROW); access roads; temporary work and storage areas; and other areas used during construction and operation of the TWE Project. This document provides direction for the detailed final Plan to be developed by the Construction Contractor(s).

H2.0 PLAN PURPOSE

The purpose of the Fire Protection Plan is to provide safe procedural practices, environmental protection measures, and other specific stipulations and methods to prevent and respond to fires during construction and operation of the Project. The final Plan will provide construction crews, environmental monitors, and the Compliance Inspection Contractor (CIC) with Project-specific information concerning fire protection procedures. The detailed final Plan will define fire prevention practices, establish fire protection requirements, control of combustible materials and flammable liquids and establish communication for agency responses in the event of a fire.

H3.0 PLAN UPDATES

This framework Plan will be updated for the Notice to Proceed (NTP) Plan of Development (POD) and will include a restricted operations section, complete notifications section, and updated relevant mitigation measures to ensure regulation compliance and safety. The Plan will include updates as needed based on final design and engineering and per agency requirements. The Construction Contractor(s) will be responsible for preparing and implementing the final Plan in compliance with all local, state, and federal regulations pertaining to fires.

H4.0 REGULATORY

H4.1 Wyoming's Wildfire Protection System

The prevention and suppression of wildfires in southern Wyoming is carried out by the Bureau of Land Management (BLM), U.S. Forest Service (USFS), and local fire districts and agencies. The agencies' activities are closely coordinated, primarily through the National Interagency Fire Center (NIFC) in Boise, Idaho, and Regional Interagency Dispatch Centers in Casper and Rawlins, Wyoming. Individual fire crews from BLM Field Offices and Forest Service Ranger Districts coordinate fire suppression activities on federal land within their jurisdictions. The Wyoming State Forestry Division (WSFD) is responsible for fire suppression on Wyoming state lands. Local fire districts and agencies provide fire prevention and suppression activities on private land, and may assist with fires on state or federal lands as requested by those agencies.

H4.2 Colorado's Wildfire Protection System

The prevention and suppression of wildfires in northwest Colorado is carried out by the BLM, USFS, Colorado Division of Fire Prevention and Control, and local fire districts and agencies. The agencies' activities are closely coordinated, primarily through NIFC in Boise, Idaho, and Regional Interagency Dispatch Center in Craig, Colorado. Individual fire crews from BLM Field Offices and Forest Service Ranger Districts coordinate fire suppression activities on federal land within their jurisdictions. Local fire districts and agencies provide fire prevention and suppression activities on private land, and may

assist with fires on state or federal lands as requested by those agencies. County Sherriff offices coordinate fire suppression activities in the counties as well as un-incorporated portions of counties.

H4.3 Utah's Wildfire Protection System

The prevention and suppression of wildfires in Utah is carried out by the BLM, USFS, Utah Division of Forestry, Fire and State Lands, and local fire districts and agencies. The agencies' activities are closely coordinated, primarily through NIFC in Boise, Idaho, and the Eastern Great Basin Geographic Area Coordination Center in Salt Lake City, Utah. Individual fire crews from BLM Field Offices and Forest Service Ranger Districts coordinate fire suppression activities on federal land within their jurisdictions. The Utah Division of Forestry, Fire and State Lands provide fire suppression activities on state and private lands. Local fire districts and agencies provide fire prevention and suppression activities on private land, and may assist with fires on state or federal lands as requested by those agencies.

H4.4 Nevada's Wildfire Protection System

The prevention and suppression of wildfires in southern Nevada is carried out by the BLM, USFS, Nevada Division of Forestry, and local fire districts and agencies. The agencies' activities are closely coordinated, primarily through NIFC in Boise, Idaho, and Western Great Basin Geographic Area Coordination Center in Reno, Nevada. Individual fire crews from BLM Field Offices and Forest Service Ranger Districts coordinate fire suppression activities on federal land within their jurisdictions. The Nevada Division of Forestry provides fire suppression activities on state and private lands and may assist with fires on state or federal lands as requested by those agencies. Local fire districts and agencies provide fire prevention and suppression activities on private land, and may assist with fires on state or federal lands as requested by those agencies.

H5.0 FIRE PROTECTION PLAN CONTENTS

The Fire Protection Plan will include information on the following topics:

1. Worker Training
2. Smoking Restrictions
3. Spark Arresters
4. Parking, Vehicle operation, and Storage Areas
5. Equipment
6. Road Closures
7. Refueling
8. Burning
9. Flammable Liquids and Explosives
10. Communications
11. Welding
12. Fire Suppression
13. Restricted operations
14. Monitoring

H6.0 FIRE PREVENTION PLAN GUIDANCE

Components of this Plan will include, but are not limited to: requiring work vehicles to carry shovels, water, and fire extinguishers; operating all vehicles on designated roads; parking in designated areas or areas free of vegetation; and operating welding, grinding, or cutting activities in areas cleared of vegetation. To minimize the occurrence of fire from the power line, safety measures would be taken that include brush-clearing within the corridor prior to work, enforcing red flag warnings, providing appropriate training to all pertinent personnel, and keeping vehicles on or within designated roads or work areas.

The presence of explosive materials on the Project site could potentially increase the risk of fire during construction. Special precautions will be taken to minimize this risk in conjunction with the Appendix C - Blasting Plan Framework, including but not limited to:

- Prohibiting ignition devices within 50 feet of explosives storage areas;
- Properly maintaining magazine sites so they are clear of fuels and combustible materials, well ventilated, and fire-resistant;
- Protecting magazines from wildfires that could occur in the immediate area;
- Posting fire suppression personnel at the blast site during high fire danger periods; and
- Prohibiting blasting during extreme fire danger periods.

H7.0 DESIGN FEATURES AND BEST MANAGEMENT PRACTICES

In addition to applicable design and operational standards, regulations, laws and permit requirements, the following design features and best management practices (BMPs) have been developed to avoid or minimize potential fire related impacts. Note that the Construction, Operation and Maintenance Plan will be a part of the NTP POD.

TWE-51: The TWE Project will be designed, constructed, and operated to meet or exceed the requirements of the National Electrical Safety Code (NESC), U.S. Department of Labor, Occupational Safety and Health Administration (OSHA) standards, and the Applicant's requirements for safety and protection of landowners and their property.

TWE-53: The Construction, Operation and Maintenance (COM) Plan will include a Blasting Plan, which will identify methods and mitigation measures to minimize the effects of blasting, where applicable. The Blasting Plan will document the proposed methods to achieve the desired excavations, proposed methods for blasting warning, use of non-electrical blasting systems, and provisions for controlling fly rock, vibrations, and air blast damage.

TWE-56: As part of the COM Plan, the Applicant will provide a Health and Safety Plan, which will outline measures to protect workers and the general public during construction, operation, and decommissioning of the TWE Project. The Health and Safety Plan will identify applicable federal and state occupational safety standards, establish safe work practices, and define safety performance standards.

TWE-64: The COM Plan will include a Fire Protection Plan. The Applicant or its Contractor(s) will notify the BLM of any fires and comply with all rules and regulations administered by the BLM and USFS concerning the use, prevention, and suppression of fires on federal lands, including any fire

prevention orders that may be in effect at the time of the permitted activity. The Applicant or its Contractor(s) may be held liable for the cost of fire suppression, stabilization, and rehabilitation. In the event of a fire, personal safety will be the first priority of the Applicant or its Contractor(s). The Applicant or its Contractor(s) will:

- Operate all internal and external combustion engines on federally-managed lands per 36 Code of Federal Regulations (CFR) Part 261.52(j), which requires all such engines to be equipped with a qualified spark arrester that is maintained and not modified;

- Carry shovels, water, and fire extinguishers that are rated at a minimum as ABC-10 pound on all equipment and vehicles. If a fire spreads beyond the suppression capability of workers with these tools, all workers will cease fire suppression action and leave the area immediately via pre-identified escape routes;

- Initiate fire suppression actions in the work area to prevent fire spread to or on federally-administered lands. If fire ignitions cannot be prevented or contained immediately, or it may be foreseeable that a fire would exceed the immediate capability of workers, the operation must be modified or discontinued. If the operation area is evacuated there will be no risk of ignition or re-ignition upon leaving.

- Notify the appropriate fire center immediately of the location and status of any escaped fire;

- Review weather forecasts and the potential fire danger prior to any operation involving potential sources of fire ignition from vehicles, equipment, or other means. Prevention measures to be taken each work day will be included in the specific job briefing. Consideration will be given to additional mitigation measures or temporary discontinuance of the operation during periods of extreme winds or dryness;

- Operate all vehicles on designated roads and park in designated areas or areas free of vegetation;

- Operate welding, grinding, or cutting activities in areas cleared of vegetation within range of the sparks for that particular action. A spotter will be required to watch for ignitions; and

- Use only diesel-powered vehicles in areas where excessive heat from vehicle exhaust systems could start brush or grass fires.

Additional BMPs and Mitigation Measures identified in the Draft Environmental Impact Statement (DEIS) are listed below. The identified BMPs and Mitigation Measures have not been finalized at this time and may be updated, changed, or eliminated in future revisions of this Plan.

PHS-1: The Applicant shall prepare an explosives use plan that specifies the times and meteorological conditions when explosives will be used and specifies minimum distances from sensitive vegetation and wildlife or streams and lakes.

PHS-4: A health and safety program shall be developed by the Applicant to protect both workers and the general public during construction, operation, and decommissioning of an energy transport project. The program should identify all applicable federal and state occupational safety standards, establish safe work practices for each task (e.g., requirements for personal protective equipment and safety harnesses, OSHA standard practices for safe use of explosives and blasting agents, measures

for reducing occupational electromagnetic field [EMF] exposures), and define safety performance standards (e.g., electrical system standards). The program should include a training program to identify hazard training requirements for workers for each task and establish procedures for providing required training to all workers. Documentation of training and a mechanism for reporting serious accidents to appropriate agencies should be established.

FIRE-1: The Applicant shall develop a fire management strategy to implement measures to minimize the potential for a human-caused fire during Project construction, operation, and decommissioning. The strategy should consider the need to reduce hazardous fuels (e.g., native and non-native annual grasses and shrubs) and to prevent the spread of fires started outside or inside a corridor, and clarify who has responsibility for fire suppression and hazardous fuels reduction for the corridor.

FIRE-2: The Applicant must work with the local land management agency to identify Project areas that may incur heavy fuel buildups, and develop a long-term strategy on vegetation management of these areas. The strategy may include land treatment during Project construction, which may extend outside the planned ROW clearing limits.

FIRE-3: The Applicant must ensure that all construction equipment used is adequately muffled and maintained and that spark arrestors are used with construction equipment in areas with, and during periods of, high fire danger.

FIRE-4: Flammable materials (including fuels) will be stored in appropriate containers.

APPENDIX I
FRAMEWORK FLAGGING, FENCING, AND SIGNAGE PLAN

TABLE OF CONTENTS

I1.0 INTRODUCTION **1**

I2.0 PLAN PURPOSE **1**

I3.0 PLAN UPDATES **1**

I4.0 REGULATORY REQUIREMENTS **1**

I5.0 METHODS **1**

I5.1 DEMARCATING PROJECT FACILITIES 1
I5.2 ENVIRONMENTAL EXCLUSION AREAS 2
I5.2.1 Signage 2
I5.2.2 Flagging 3
I5.2.3 Fencing 3

I6.0 INSTALLATION, MONITORING, AND MAINTENANCE **4**

I7.0 DESIGN FEATURES AND BEST MANAGEMENT PRACTICES **4**

TABLES:

TABLE I1 SIGNAGE STANDARDS 2

ACRONYMS

Applicant	TransWest Express LLC, also TransWest
BLM	Bureau of Land Management
BMP	Best Management Practice
CIC	Compliance Inspection Contractor
DEIS	Draft Environmental Impact Statement
NTP	Notice to Proceed
Plan	Flagging, Fencing, and Signage Plan
POD	Plan of Development
Project	TransWest Express Transmission Project, also TWE Project
ROD	Record of Decision
ROW	right-of-way
TransWest	TransWest Express LLC, also Applicant
TWE Project	TransWest Express Transmission Project, also Project
USFS	United States Forest Service

I1.0 INTRODUCTION

This framework Flagging, Fencing, and Signage Plan (Plan) describes the methods that will be used in the field by TransWest Express LLC (TransWest or Applicant) and its Construction Contractor(s) to delineate the TransWest Express Transmission Project (TWE Project or Project) limits of disturbance and protect sensitive environmental and cultural resources during Project construction. These methods are intended to ensure TransWest personnel, Construction Contractor(s), Bureau of Land Management (BLM), U.S. Forest Service (USFS), Compliance Inspection Contractor (CIC), and environmental investigators and monitors on the Project construction sites stay on approved access routes and within approved work areas. The measures described in this Plan are an integral part of the environmental compliance program for avoiding and minimizing impacts on sensitive resources.

I2.0 PLAN PURPOSE

The purpose of this Plan is to describe the methods that will be used in the field to delineate the Project limits of disturbance and protect sensitive environmental and cultural resources during Project construction. The objective of this Plan is to provide information on the field markings (i.e., flagging, fencing, and signage) that will be used to identify approved Project travel and work areas, as well as environmentally sensitive areas where construction or travel is to be excluded.

I3.0 PLAN UPDATES

This Plan will be updated for the Record of Decision (ROD) Plan of Development (POD) and will include updated signage standards (Table I1) based on the selected Agency Preferred Alternative. The Plan for the Notice to Proceed (NTP) POD will be updated as needed based on final design and engineering. The Construction Contractor(s) will be responsible for preparing and implementing the final Plan.

I4.0 REGULATORY REQUIREMENTS

No federal, state or local laws, rules or regulations specifically address flagging, fencing, and signage protocols for construction projects. However, some of the mitigation measures identified in the Draft Environmental Impact Statement (DEIS) for the Project are dependent on adequate field marking of work areas and/or of sensitive resource areas to avoid and minimize impacts to environmental resources. These mitigation measures include flagging or fencing requirements to help protect vegetative cover, water quality, cultural resources, and special status species and minimize the spread of noxious weeds.

I5.0 METHODS

I5.1 Demarcating Project Facilities

Standard survey flags and stakes will be installed before the start of Project construction. Structure sites (e.g., transmission structure locations, anchor points and reference points) will be marked by the Construction Contractor(s). Designated Project access roads, parking areas and pullout areas will be marked to facilitate travel to and from the right-of-way (ROW). Temporary work areas at structure sites, wire pulling/tensioning/splicing sites, material storage yards, fly yards/staging areas, and batch plants will be demarcated as necessary to indicate the limits of approved work areas. The Construction Contractor(s) will stake the boundaries of the maximum area needed for work areas and will provide the dimensions to the CIC. If the delineated work areas exceed the approved dimensions for the Project facilities, the Construction Contractor(s) will coordinate with the CIC for approval and a variance may be required.

I5.2 Environmental Exclusion Areas

Signs, flags and/or fencing will be used to establish exclusion areas to protect sensitive environmental resources (e.g., biological, cultural, wetland, and paleontological resources) in the vicinity of construction activities. A system of standardized and simplified exclusion markings will be used to reduce potential confusion during construction and minimize the risk of highlighting types of sensitive resources that could be targeted by vandals (e.g., if exclusion areas protecting archaeological sites were marked differently than those protecting sensitive natural resource areas, the sties would be at a higher risk of unauthorized artifact collecting or other disturbances). In extremely sensitive areas identified by the BLM Authorized Officer, the work area limits may be flagged or fenced for protection of the resource from destruction, harassment or pillaging.

I5.2.1 Signage

Signs will be used to help identify TWE Project facilities such as approved access roads and temporary work areas. Signs will be a minimum of 8.5 inches by 11 inches on laminated color paper. Signs will be installed on metal posts and wooden stakes or attached to exclusion fencing/roping as appropriate. Background colors will vary to enhance sign recognition from a distance.

Table I1 provides standards for marking Project features that will be needed during construction. The attachments at the end of this Plan framework show the size and configuration of typical sign layouts. Signs for sensitive resource areas will be oriented for visibility from both directions of likely travel. Table I1 may be updated, changed, or revised in future revisions of this Plan.

TABLE I1 SIGNAGE STANDARDS

FEATURE	FLAGGING OR SIGN COLOR	SIGN TEXT	WHAT TO DO
Project access roads	To be determined by Construction Contractor(s)	Project Access Road – Road No. (e.g., Road 3) – TransWest Express Transmission Project	To be located at points of intersection, additional intermittent flagging may be required. Construction Contractor(s) to verify that right-of-entry has been obtained before marking these areas.
Temporary work areas (structure sites, material yards, etc.)	To be determined by Construction Contractor(s)	Not applicable	Construction Contractor(s) to verify that right-of-entry has been obtained before marking these areas.
Protected animals/plants or sensitive environmental areas.	Yellow	Sensitive Resource Area Keep Out	Avoid these items/areas – do not drive vehicles or equipment near flagging or within flagged areas.
Reclamation project areas	Brown	Restoration in Progress – No Vehicle Traffic Allowed	Avoid these items/areas – do not drive vehicles or equipment near flagging or within flagged areas.
Noxious weed cleaning stations	Blue	Weed Cleaning Station	Signs will be posted at entry points into weed cleaning stations.
Proposed structure locations	To be determined by Construction Contractor(s)	Not applicable	Do not disturb survey stakes.
Structure offsets	To be determined by Construction Contractor(s)	Not applicable	Do not disturb survey stakes.
Outside edge of permitted ROW or centerline	To be determined by Construction Contractor(s)	Not applicable	Do not drive vehicles or equipment outside of designated corridor.

FEATURE	FLAGGING OR SIGN COLOR	SIGN TEXT	WHAT TO DO
Cadastral survey monument	To be determined by Construction Contractor(s)	Not applicable	Protect in place.
Non-authorized access roads	To be determined by Construction Contractor(s)	Do Not Enter Not An Authorized Access Road	Do not drive vehicles or equipment on unauthorized roads.
Existing and Temporary Gates	To be determined by Construction Contractor(s)	Close Gate	Post at appropriate locations along the ROW in coordination with the appropriate land management agency or landowner.

NOTES:

- Staking, flagging and signage will be conducted by the Construction Contractor(s) and verified by the CIC, including sensitive resource areas and exclusion areas.
- Construction Contractor(s) shall stake all proposed tower center hub and footer locations, structure locations and associated reference points and mark the centerline with inter-visible stakes not to exceed 500 feet and at all road crossings.
- Construction Contractor(s) shall use staking intervals appropriate to the conditions observed in the field. For example, areas of rough terrain or dense vegetation may require staking intervals less than 500 feet. In all cases, field staking intervals shall be done at a frequency such that each adjacent stake can be easily discernable.
- Maintain, refurbish and replace staking as necessary over time as conditions require.

I5.2.2 Flagging

Survey flagging (i.e., surveyor's ribbon tied to wooden stakes, metal posts or appropriate vegetation) will be used to delineate the disturbance limits of temporary work areas, access roads, etc., unless existing fencing or other features clearly indicate the limits of the area. Survey flagging may be used to demarcate sensitive resource locations situated a safe distance from planned construction activities but generally will not be used to define resource exclusion areas close to planned construction activities due to concerns about the visibility and stability of flagging during construction.

The BLM and USFS Authorized Officers or CIC, as needed, will determine whether flagging or fencing is the appropriate marking and protection device for a given location. Flagging color will conform to the requirements of Table I1.

I5.2.3 Fencing

To delineate the limits of construction near sensitive resources requiring a high level of protection from Project disturbance, a combination of one or more of the following fencing materials will be installed by the Construction Contractor(s):

- Rope (0.25 inch in diameter colored yellow or orange),
- Plastic or fabric tape; and/or
- Safety fencing (plastic orange or red mesh at least 24 inches wide and at least 18 inches off the ground to facilitate travel by small animals).

Rope with periodic marking by exclusionary signs or lengths of tape is a highly visible and effective exclusion device. Rope, tape, and safety fence will be installed using metal posts for increased durability and in areas with compact or rocky soils. If construction within a wetland is necessary, the boundaries of the approved disturbance areas will be demarcated so impacts are limited to the area authorized. In most cases, it is anticipated the exclusion device will be installed at the boundaries of the sensitive resource (including any required buffers), rather than at the edge of the work area. If a buffer zone encroaches into

the work area, only the portions that overlap with the work area will be delineated and signed as an exclusion zone.

I6.0 INSTALLATION, MONITORING, AND MAINTENANCE

The objectives of this Plan are dependent on the proper installation, monitoring, and maintenance of protective devices. The Construction Contractor(s) will be responsible for the installation and maintenance of the field marking of Project features as described above. These markings will be installed in advance of construction activities in the area, maintained during the course of construction (as necessary), and removed after Project cleanup and reclamation activities. Environmental exclusion signs, flags and fencing will be installed by the Construction Contractor(s) in coordination with the CIC and with the assistance of appropriate environmental inspectors and monitors (e.g., botanists, biologists, archaeologists). These environmental exclusions will be installed prior to the start of construction within a Project work area. The CIC will be consulted if there is uncertainty as to the type or location of needed exclusion devices for botanical, wildlife, wetlands, streams or archaeological sites.

Routine Project monitoring by the CIC and Construction Contractor's environmental inspectors and monitors will include an on-going assessment of the need for replacement or repair of exclusionary signs, flagging or fencing. Maintenance needs related to exclusionary devices will either be corrected at the time of observation by the CIC or will be documented as a future maintenance need. If maintenance of an exclusionary device is needed within an active construction area, corrective action will be taken within one workday. Maintenance of signs, flagging and fencing within inactive work areas will be implemented as necessary.

I7.0 DESIGN FEATURES AND BEST MANAGEMENT PRACTICES

In addition to applicable design and operational standards and designation of sensitive ecological areas, the following design features and Best Management Practices (BMPs) have been identified. Note that the Construction, Operation and Maintenance Plan will be a part of the NTP POD.

TWE-10: The area of limits of construction activities will normally be predetermined, with activity restricted to and confined within those limits. No paint or permanent discoloring agents will be applied to rocks or vegetation to indicate survey or construction activity limits.

TWE-15: The NTP POD Plan will include a Clean-up Work Management Plan and a Flagging, Fencing, and Signage Plan. Except for permanent survey markers and material that locate proposed facilities, stakes, pins, rebar, spikes, and other material will be removed from the surface and within the top 15 inches of topsoil as a part of final clean-up. The Applicant will adhere to BLM fencing standards where required. Fences on ROW will be removed where necessary and replaced to the original condition or better when the work is finished. Where existing fences are removed to facilitate the work, temporary fence protection for lands adjacent to the ROW will be provided at all times during the continuation of the Contract. Such temporary fence protection will be adequate to prevent public access to restricted areas. Temporary fencing constructed on the ROW will be removed by the Contractor as part of the clean-up operations prior to final acceptance of the completed work.

TWE-33: Prior to the start of construction, the Applicant will provide training to all Contractor and Subcontractor personnel and others involved in construction activities where/if there is a known occurrence of protected species or habitat in the construction area. Sensitive areas will be considered avoidance areas. Prior to any construction activity, avoidance areas will be marked on the ground and maintained through the duration of the Contract. The Applicant will remove markings during or following final inspection of the Project.

TWE-43: The NTP POD Plan will include a Flagging, Fencing, and Signage Plan. The Applicant will adhere to BLM fencing standards where required. Fences and gates will be repaired or replaced to their original pre-disturbed condition as required by the landowner or the land management agency if they are damaged or destroyed by construction activities. Temporary gates will be installed only with the permission of the landowner or the land management agency, and will be restored to their original pre-disturbed condition following construction. Cattle guards will be installed where new permanent access roads cut through fences, at the request of the land management agency.

Project Access Road Road No.

Sensitive

Resource Area

Keep Out

Restoration In Progress – No Vehicle Traffic Allowed

No Refueling Within 100 Feet of Wetlands and Streambanks

Do Not Enter

Not an

Authorized

Access Road

Weed Cleaning Station No.

APPENDIX J
FRAMEWORK GEOTECHNICAL PLAN

TABLE OF CONTENTS

J1.0 INTRODUCTION 1
J2.0 PLAN PURPOSE 1
J3.0 PLAN UPDATES 1
J4.0 TYPICAL PROCEDURES 1

ACRONYMS

4WD	four-wheel drive
Applicant	TransWest Express LLC, also TransWest
BLM	Bureau of Land Management
DEIS	Draft Environmental Impact Statement
gvm	gross vehicle mass
Plan	Geotechnical Plan
POD	Plan of Development
Project	TransWest Express Transmission Project, also TWE Project
psi	pounds per square inch
ROD	Record of Decision
ROW	right-of-way
TransWest	TransWest Express LLC, also Applicant
TWE Project	TransWest Express Transmission Project, also Project
USCS	Unified Soil Classification System

J1.0 INTRODUCTION

This framework Geotechnical Plan (Plan) generally describes the procedures required by TransWest Express LLC (TransWest or Applicant) and its Construction and Geotechnical Contractors to gather geotechnical information to allow for design and construction of the TransWest Express Transmission Project (TWE Project or Project).

J2.0 PLAN PURPOSE

This Plan provides a sequence of events to be utilized by TransWest and its Construction and Geotechnical Contractors to accomplish the necessary geotechnical exploration and sampling to facilitate design of the Project. This Plan is to be implemented after the receipt of the Record of Decision (ROD) and during the final engineering phase of the Project. These measures are intended to provide the required engineering parameters for design while staying within the disturbance limits as defined by the ROD Plan of Development (POD).

The mitigation measure which relates to this Plan is identified in the Draft Environmental Impact Statement (DEIS) as mitigation measure GE-1 which states: in areas with geologic hazards and active mining; placement of Project structures and other Project related disturbance would be avoided to the extent practical. Where avoidance is not possible a site specific geotechnical investigation and engineering design would be implemented during construction and operation of the Project. Depending on the type of potential geologic hazard, the designs may vary and should address specific needs for enhanced structural supports. Site specific assessment of geologic hazards shall include review of available information concerning areas of hazards, and consultation with appropriate government agency personnel who are knowledgeable about the hazards. Assessment also shall include, if necessary, field surveys and gathering of geotechnical information to determine what engineering design methods would mitigate or lessen potential risks. If active mines cannot be avoided, Applicant will conduct similar due diligence in regard to hazards from underground and historic mining to ensure that Project facilities will not hinder access to mineral resources or create dangers to mining activities. The Geotechnical Plan will address this measure as it is further developed.

J3.0 PLAN UPDATES

This Plan will be updated for the ROD POD based on preliminary engineering and design for the selected Agency Preferred Alternative and will include results from the geotechnical desktop study to be completed during the summer of 2014. All geotechnical field activities will be performed following the ROD and all ground disturbing activities associated with geotechnical studies will be contained within the disturbance limits as described in the ROD POD. The final Geotechnical Plan will be prepared by TransWest and its Geotechnical Contractor(s) and approved by the Bureau of Land Management (BLM) or the land management agency as appropriate prior to initiation of any surface disturbing activities. Field surveys for sensitive plant species, Class III cultural resource inventories, and other required resource surveys will be conducted as necessary for the final Geotechnical Plan.

J4.0 TYPICAL PROCEDURES

A geotechnical exploration program may be prepared for the Project. This program will describe specific boring locations, access, landowner/agency notifications, schedule, in-field testing and boring depth requirements. The program may consider borings at every point of interest and at 3 mile maximum spacing along tangents. Points of interest are defined as structures with a line angle greater than 5 degrees, exceptionally long spans, line crossings, potential landslide areas or other areas of

geologic instability, or a change in geologic setting. All boring locations will be located within the Project right-of-way (ROW) and will avoid sensitive resources to the maximum extent practicable. The Applicant will consider other investigative techniques for determining the engineering properties of the soil needed for foundation design as is appropriate and practical for the soil conditions and types. Access to each of the drill sites will be considered in selecting geotechnical exploration locations. Locations that can be accessed with existing roads will be chosen when available to avoid even elementary road construction. Some locations will require overland travel (i.e. “drive and crush”) from existing access roads.

The drilling equipment needed to perform the drilling and sampling activities will include truck mounted, track mounted or all-terrain drill rigs, water truck, four-wheel drive (4WD) support vehicle including an air compressor, and a 4WD vehicle for the field engineer. The type of rig used will depend on accessibility of boring locations, and practicality of using continuous flight hollow-stem auger, mud rotary, or ODEX drilling techniques to advance the borings. Possible types of drilling equipment are listed below:

- Conventional two-ton or larger truck with a drill rig mounted on the chassis.
- A 30,000 gross vehicle mass (gvm) 6-wheeled truck, about 30 feet long, with or without 4WD capabilities.
- All-terrain vehicle consisting of a similar drilling rig mounted on a lighter framed, shorter vehicle equipped with oversized low-pressure tires. Track mounted drilling rigs use a wide variety of drilling machinery on tracked vehicles with low (about 10 pounds per square inch [psi]) ground pressure.

Soil samples will be collected by driving a sampling device into the undisturbed soils just below the augers. Where necessary, rock core samples will also be taken using a rock coring barrel. Laboratory testing will be conducted on soil/rock samples to define the Unified Soil Classification System (USCS) soil type, strength parameters and corrosion characteristics. Upon completion and before leaving each site, soil borings will be backfilled, securely covered and all cuttings will be removed from the site. No open holes will be left unattended, and all holes will be backfilled to near the ground surface before moving to the next boring.

Boring depth requirements will vary based on structure type and foundation loading. However, an average soil boring depth is anticipated to be 40 feet unless bedrock is encountered, in which case, up to 15 feet of rock core will be accomplished.

APPENDIX K
GREATER SAGE-GROUSE MITIGATION PLAN

DRAFT REPORT:
TransWest Express Transmission Line Project: Greater Sage-grouse Mitigation Plan

All numbers in this draft report are provisional and may be subject to change pending agency review and additional quality checks.

Prepared by:

TRANSWEST EXPRESS LLC

May 2014

Contents

1. Introduction 4

1.1. TransWest Express Project Overview 4

1.2. Greater Sage-grouse Habitat 5

1.3. Greater Sage-grouse Conservation Strategies 5

1.3.1. BLM Sensitive Species 5

1.3.2. Wyoming Greater Sage-grouse Strategy 6

1.3.3. Colorado Greater Sage-grouse Strategy 6

1.3.4. Utah Greater Sage-grouse Strategy 6

1.3.5. Nevada Greater Sage-grouse Strategy 6

1.4. Mitigation Purpose 6

2. Mitigation Strategy 7

2.1. Mitigation Guidance 8

2.1.1. BLM Mitigation Policy 8

2.1.2. Framework for Sage-grouse Impacts Analysis for Interstate Transmission Lines 8

2.1.3. U.S. Fish and Wildlife Service Mitigation Recommendations 9

2.2. Mitigation Siting Prioritization 9

2.3. Mitigation Schedule 10

2.4. Oversight Committee 10

2.5. Changes to the Plan 10

3. Types of Impacts to Greater Sage-grouse 10

3.1. HEA Modeled Impacts 10

3.2. Other Potential Impacts 11

4. Mitigation Measures 12

4.1. Avoidance and Minimization 12

4.1.1. Environmental protection measures 13

4.2. HEA Modeled Mitigation 14

4.2.1. Mitigation Project Types 15

4.2.2. Specific Mitigation Projects 19

4.2.3. In-lieu fees 19

4.2.4. Monitoring and maintenance 20

5. Conclusion 20

6. References 21

Attachments

Draft Report: Greater Sage-grouse Habitat Equivalency Analysis for the TransWest Express Project, dated May 2014

1. Introduction

This document presents the results of TransWest Express LLC's (TransWest) Habitat Equivalency Analysis (HEA) modeling and a framework for compensatory mitigation for greater sage-grouse (*Centrocercus urophasianus*) potentially impacted by the TransWest Express Transmission Project (TWE Project or Project). Changes to greater sage-grouse policies and guidance, analyses of effects and final TWE Project alignments continue to be developed and refined as the TWE Project is reviewed by the Bureau of Land Management (BLM) and Western Area Power Administration (Western) pursuant to requirements of the National Environmental Policy Act (NEPA). TransWest will consider new information as it becomes available and revise this Mitigation Plan as appropriate.

1.1. TransWest Express Project Overview

The TWE Project is a proposed extra high voltage, direct current (DC) transmission system extending from south-central Wyoming to southern Nevada. The proposed transmission line would cross four states (Wyoming, Colorado, Utah, and Nevada) on lands owned or administered by the BLM, United States Forest Service (USFS), National Park Service (NPS), Bureau of Reclamation (BOR), Utah Reclamation Mitigation and Conservation Commission (URMCC), various state agencies, Native American tribes, municipalities, and private parties. The TWE Project would provide the transmission infrastructure and capacity necessary to deliver cost-effective renewable energy produced in Wyoming to the Desert Southwest region (California, Nevada, Arizona), ultimately helping contribute to a cleaner world, strengthen the electric grid, and provide much-needed electricity to millions of homes and businesses every year. The TWE Project will deliver enough clean, sustainable energy to power nearly 2 million homes and reduce greenhouse-gas emissions equivalent to taking 1.5 million cars from the road.

The ±600 kilovolt (kV) DC transmission line would be approximately 725 to 750 miles in length (depending upon the alternative selected), located within a 250-foot wide right-of-way (ROW). The TWE Project includes ground-disturbing activities associated with the construction of above-ground transmission lines and includes transmission tower locations, access roads, a ground electrode line, a ground electrode site, fly yards, material yards, two AC/DC converter stations (a northern terminal and a southern terminal), pulling/tensioning areas, and work areas. The TWE Project has been sited to avoid and minimize greater sage-grouse (*Centrocercus urophasianus*) lek buffers and occupied habitat. However, complete avoidance is unachievable and portions of the TWE Project cross designated habitat for greater sage-grouse (BLM's Preliminary General Habitat [PGH]) in Wyoming, Colorado, and Utah. As a result, TransWest has coordinated with the BLM, Western Area Power Administration (Western), U.S. Fish and Wildlife Service (USFWS), Wyoming Game and Fish Department (WGFD), and Colorado Parks and Wildlife (CPW), and Utah Division of Wildlife Resources (UDWR) to develop a mitigation strategy to compensate for the unavoidable loss of greater sage-grouse habitat that would potentially occur as a result of the TWE Project construction, operation and maintenance in areas of greater sage-grouse habitat.

1.2. Greater Sage-grouse Habitat

As described in the draft EIS (BLM 2013), greater sage-grouse use a variety of habitats throughout their life cycle. Breeding occurs on strutting grounds, or leks, that are located in flat, sparsely vegetated areas within large tracts of sagebrush (Connelly et al. 2004). Nesting habitat is typically located near active leks in medium to tall sagebrush with a perennial grass understory (Connelly et al. 2000). Studies have shown that taller sagebrush with larger canopies and more understory cover can lead to higher nesting success (Connelly et al. 2004, 2000). Hens and their broods are found in more lush habitats consisting of a high diversity of grasses and forbs that attract insects, such as wet meadows, riparian areas, and irrigated farmland within or near sagebrush. In winter, greater sage-grouse move to south- and west-facing slopes that maintain exposed sagebrush at least 10 to 12 inches above the snow. The quality and quantity of habitat and location within the landscape is key to the long-term survival and success of the greater sage-grouse.

1.3. Greater Sage-grouse Conservation Strategies

In March 2010, the USFWS completed a status review for greater sage-grouse. After reviewing the five listing factors (habitat destruction, overutilization, disease and predation, inadequate regulatory mechanisms, and other natural or manmade factors) under section 4(a)(1) of the Endangered Species Act (ESA), the USFWS concluded that the greater sage-grouse warrants protection under the ESA. However, the USFWS determined that proposing the species for protection was precluded by the need to take action on other species facing more immediate and severe extinction threats. As a result, the greater sage-grouse was added to the list of species that are candidates for ESA protection.

In an effort to prevent federal listing of the greater sage-grouse, Wyoming, Colorado, Utah, and Nevada have developed greater sage-grouse management/conservation plans that outline goals and objectives for managing the species. In addition, the BLM and the State of Wyoming have issued several policies regarding management of the greater sage-grouse in Wyoming. BLM Instruction Memoranda IM) 2010-012, 2012-043, 2012-044, 2012-019, and State of Wyoming Executive Order 2011-5 include specific protection measures guiding development in greater sage-grouse habitat. The BLM is also currently completing resource management plan amendments in Wyoming, Colorado, Utah and Nevada specifically to address management of greater sage-grouse and their habitats on public lands.

1.3.1. BLM Sensitive Species

The principal greater sage-grouse regulatory mechanism for the BLM is conservation measures in Resource Management Plans (RMPs). In 2011, the BLM established the National Greater Sage-Grouse Planning Strategy to evaluate the adequacy of the RMPs and address revisions and amendments throughout the range of the greater sage-grouse. IM 2012-044 provides direction to the BLM for considering conservation measures identified in the Sage-Grouse National Technical Team's *A Report on National Greater Sage-Grouse Conservation Measures* during the RMP revisions that are now underway in accordance with the 2011 National Greater Sage-Grouse Planning Strategy.

1.3.2. Wyoming Greater Sage-grouse Strategy

Wyoming Executive Order 2011-5 (preceded by Executive Orders 2008-8 and 2010-4) designated certain portions of Wyoming where viable greater sage-grouse populations are to be maintained at current levels, as core greater sage-grouse areas. The WGFD has developed a map of greater sage-grouse core population areas in Wyoming. The core areas contain important seasonal habitats and more than 80% of the state's greater sage-grouse population. Executive Order 2011-5 also identified corridors through several of Wyoming's core areas where large energy transmission projects were directed to be sited to minimize impacts to greater sage-grouse. Generally, these transmission corridors were identified adjacent to previous disturbed corridors (highways, railroads, pipelines, transmission lines, etc.). The TWE Project is located in one such corridor that follows Interstate Highway 80.

The Wyoming Greater Sage-grouse Conservation Plan (Wyoming Sage-Grouse Working Group 2003) established the framework for local working groups to guide management efforts directed at halting long-term population declines and maintaining and improving greater sage-grouse habitats in Wyoming. The TWE Project falls within the South Central Wyoming Sage-grouse Conservation Plan (SC Working Group 2007) and Southwest Wyoming Local Sage-grouse Working Group.

1.3.3. Colorado Greater Sage-grouse Strategy

CPW developed a comprehensive Colorado Greater Sage-Grouse Conservation Plan (2008) with a conservation strategy that identifies key issues facing greater sage-grouse conservation. For each issue, objectives were developed to help mitigate the issue; for each of these objectives, a number of specific strategies are described. The plan provides a statewide perspective to help ensure the long-term survival of greater sage-grouse and supplements local working groups. The TWE Project crosses land within the Northwest Colorado Greater Sage-grouse Conservation Plan (NWCGSGWG 2008).

1.3.4. Utah Greater Sage-grouse Strategy

The Conservation Plan for Greater Sage-grouse in Utah (UDWR 2013) is designed to eliminate the threats facing greater sage-grouse while balancing the economic and social needs of the residents of Utah through coordination with local, state, and federal agencies, and local area working groups. The Plan states that transmission lines should be sited in existing corridors, or at a minimum, in concert with existing linear features in greater sage-grouse habitat and the direct effects of construction should be mitigated.

1.3.5. Nevada Greater Sage-grouse Strategy

The TWE Project does not cross any greater sage-grouse habitat in Nevada.

1.4. Mitigation Purpose

The Draft Environmental Impact Statement for the TWE Project prepared by the BLM and Western (DEIS) (BLM 2013) analyzed potential impacts to greater sage-grouse from construction, operation and maintenance of the TWE Project. Known impacts would include direct mortality, permanent and temporary habitat loss, habitat fragmentation, and temporary displacement due to noise and human activity. The purpose of the TransWest mitigation strategy is to compensate for known and quantifiable

direct and indirect impacts to greater sage-grouse habitat that may occur as a result of the TWE Project construction, operation and maintenance.

Mitigation includes (a) avoiding the impact altogether; (b) minimizing impacts by limiting the degree or magnitude of the action; (c) rectifying the impact by repairing, rehabilitating, or restoring the affected environment; (d) reducing or eliminating the impact over time by preservation and maintenance operations during the life of the action; and (e) compensating for the impact by replacing or providing substitute resources or environments. This definition is consistent with National Environmental Policy Act (NEPA) regulations (40 CFR Part 1508.20(a-e)), USFWS Mitigation Policy (January 23, 1981 Federal Register, pp 7644-7663), and Wyoming Game and Fish Commission Mitigation Policy No. VII H.

In response to Secretarial Order Number 3330 entitled "Improving Mitigation Policies and Practices of the Department of the Interior," issued by the Secretary of the Interior Sally Jewel in October 2013, *"A Strategy for Improving Mitigation Policies and Practices of The Department of the Interior"* was released in April 2014 (Strategy). The Strategy highlights the challenges and opportunities associated with developing and implementing an effective mitigation policy, and describes the key principles and actions necessary to successfully shift from project-by-project management to consistent, landscape-scale, science-based management of the land and resources for which the Department is responsible. The Strategy concludes that taking a landscape-scale approach to mitigation can meet the Department's needs of accommodating both infrastructure development and conservation while improving permitting efficiencies, reducing conflicts, and better achieving development and conservation goals.

TransWest's greater sage-grouse mitigation plan is consistent with the Strategy by utilizing a landscape-scale, science-based approach to avoid, minimize and compensate for potential impacts to greater sage-grouse that may result from development of the TWE Project.

2. Mitigation Strategy

The mitigation strategy will generally adhere to the following principles:

- BLM-identified spatial and temporal mitigation measures will be used to lessen the impacts to extent practicable.
- Greater sage-grouse habitat quality and quantity varies across the landscape. To ensure that habitat variability is fully captured, a quantitative habitat metric (i.e., the HEA) will be used to measure the potential loss of habitat that would result from construction, operation and maintenance of the TWE Project within currently occupied greater sage-grouse habitat.
- When possible, greater sage-grouse habitat that is directly lost or impacted during construction would be compensated for by replacing or enhancing habitats of similar quality and size. Mitigation siting would occur in the nearest suitable location in an effort to provide the greatest benefit to the local greater sage-grouse population being impacted by TWE Project construction, operation and maintenance.
- When possible, multiple mitigation measures will be coupled to maximize the benefit to greater sage-grouse populations.

- A maintenance and monitoring approach will be identified for each mitigation measure type.

2.1. Mitigation Guidance

2.1.1. BLM Mitigation Policy

The mitigation approach TransWest will implement for the TWE Project will follow the guidance provided by BLM IMs IM 2013-142, 2012-043, and 2012-044 and Department of Interior Secretarial Order 3330 (Order 3330). Collectively, these provide guidance for greater sage-grouse habitat management and mitigation for pending transmission rights-of-way in Preliminary Priority Habitat (PPH) and Preliminary General Habitat (PGH). These policies state that transmission rights-of-ways having disturbances greater than 1 linear mile or 2 acres require cooperation between the BLM, project proponents, and other appropriate agencies to develop and consider implementation of appropriate regional mitigation to avoid or minimize habitat and population-level effects to greater sage-grouse.

Under these policies, offsite and onsite mitigation can include in-kind or out-of-kind mitigation. In-kind is defined as the replacement or substitution of resources that are of the same type and kind of those being impacted. Out-of-kind is defined as replacement or substitutions of resources that while related are of equal or greater overall value to public lands. IM 2013-142 also identifies that the BLM may accept monetary contributions, how they may be used, and that mitigation may be conducted on non-Federal lands.

2.1.2. Framework for Sage-grouse Impacts Analysis for Interstate Transmission Lines

The BLM, working in concert with the USFWS, has developed a *Framework for Sage-grouse Impacts Analysis for the TransWest Express Transmission Project* (Framework). The Framework addresses TWE Project-related impacts to greater sage-grouse habitat that bear directly on listing factors considered by the USFWS when evaluating the need to provide full listing protection under the ESA. The Framework specifies the use of HEA to scale mitigation and compensate for the loss of habitat services over the life of the TWE Project. HEA is a science-based, peer-reviewed method of scaling compensatory mitigation requirements to potential TWE Project-related effects, measured as a loss of habitat services from pre-disturbance conditions (Allen et al. 2005; Dunford et al. 2004; King 1997; Kohler and Dodge 2006; National Oceanic and Atmospheric Administration 2006, 2009). Habitat services include those ecosystem features (i.e., physical site-specific characteristics of an ecosystem) and ecosystem functions (i.e., biophysical processes that occur within an ecosystem) that support wildlife and human populations (King 1997).

In compliance with IM 2012-43, IM 2013-142, Order 3330, and the Framework, TransWest has completed an HEA to determine the amount of compensatory mitigation necessary to offset potential impacts to greater sage-grouse resulting from the construction, operation, and maintenance of the TWE Project. The HEA produced an estimate of the permanent and interim potential loss of greater sage-grouse habitat services as a result of vegetation loss, noise, and human presence anticipated with TWE Project construction and operation. The HEA also modeled mitigation measures that may be implemented to offset the potential lost habitat services.

2.1.3. U.S. Fish and Wildlife Service Mitigation Recommendations

The USFWS Wyoming Ecological Services Office has provided recommendations regarding the development and implementation of a mitigation plan to address TWE Project impacts on greater sage-grouse and its habitat. Per these recommendations, TransWest will:

- Using results of the HEA, TransWest will allocate how much will be spent on mitigation in terms of specific actions or mitigation projects proposed for implementation. The selected mitigation project mix will be described providing a general breakdown regarding the amount of money going toward conservation easements, habitat enhancement projects, fence marking, etc.
- Focus the majority of mitigation on conservation of habitat, specifically on mitigation projects that protect habitat, enhance or maintain quality of habitat, and reduce fragmentation. Components of habitat conservation include preservation through easements, enhancements (such as juniper removal), and reclamation/restoration. These habitat conservation projects may then be supplemented by a smaller portion of mitigation projects such as fence-marking, focused research in designated areas following specific guidelines, improvement of mesic habitats important for brood-rearing and summer use, or others.
- Implement mitigation in a collaborative manner by working with members of an "Oversight Committee" composed of biologists working for BLM, Western, USFWS, WGFD, CPW, and UDWR. The role of this team is to provide guidance and biological advice concerning the accomplishment of successful mitigation on the ground.

Additionally, the USFWS provided specific recommendations to ensure successful completion of mitigation projects that contribute to greater sage-grouse habitat conservation. Within these recommendations, the USFWS emphasizes the need to consider each mitigation site individually and provide a clear justification regarding the value of the mitigation measure at that site.

2.2. Mitigation Siting Prioritization

Mitigation projects will be sited in the same state where the impact occurred and in a manner consistent with the priorities identified in the BLM's IM 2013-142 and Order 3330. As a baseline, mitigation project location will be prioritized according to following hierarchy to the extent practicable:

1. Mitigation will be located in Core Areas/Preliminary Priority Habitats that are intersected by the TWE Project or areas where habitat connectivity may be restored (i.e., local offsite mitigation),
2. Mitigation will be located within 18 kilometer (km) (11.2 mile [mi]) of the transmission line (i.e., onsite as defined in the DEIS) to benefit the impacted greater sage-grouse populations and their habitat.
3. Mitigation will be located within the region (e.g., Western Association of Fish and Wildlife Agencies' management zones) to benefit greater sage-grouse (i.e., regional offsite mitigation), particularly when onsite or nearby offsite mitigation is deemed to offer less benefit to impacted greater sage-grouse populations or their habitat than regional mitigation.

TransWest shall consider the above hierarchy and emphasize mitigation that benefits the populations that are impacted within each state; however, mitigation projects may be located elsewhere if the

Oversight Committee (see Section 2.4) identifies specific opportunities that will provide a greater benefit to greater sage-grouse than those in the impacted area.

2.3. Mitigation Schedule

Mitigation for the TWE Project is tied to the issuance of the BLM right-of-way grant or a specific notice-to-proceed. Mitigation funds would not be available for implementation until the right-of-way grant is issued or a specific notice-to-proceed for construction is issued although planning activities may take place earlier.

2.4. Oversight Committee

As described in the USFWS recommendations, an Oversight Committee consisting of agency biologists and other stakeholders/advisors, would be created to provide guidance on the mitigation approach for the TWE Project. As necessary, both local and landscape level perspectives would be represented on the Oversight Committee by involving local greater sage-grouse working groups, or other experts in the fields of mitigation, greater sage-grouse ecology, or other needed discipline. Committee member should have familiarity with the TWE Project area so that they can provide guidance on selection of mitigation locations. Committee participation may also be dependent upon the state in which the impact and mitigation occurs.

Primary objectives of the Oversight Committee would include recommendations for selection of mitigation projects, validation of the success of mitigation projects and their effectiveness at the local or landscape level, oversight of mitigation implementation, identification of alternate mitigation projects and strategies, and review of mitigation monitoring results. A selected committee member/entity would be responsible for facilitating communications among Oversight Committee members and would schedule necessary review meetings to discuss mitigation projects and monitoring results. The roles and responsibilities of Oversight Committee members will vary by mitigation project type and location. Once final mitigation projects are identified, participants, roles and responsibilities within the Oversight Committee will be determined and assigned.

2.5. Changes to the Plan

Changes to greater sage-grouse policies and guidance may be issued during the TWE Project ROW application review process. TransWest will consider new information as it becomes available and revise the Mitigation Plan as appropriate.

3. Types of Impacts to Greater Sage-grouse

TransWest's mitigation strategy is to compensate for known impacts to greater sage-grouse habitat that may occur as a result of TWE Project construction, operation and maintenance. Known and quantifiable impacts were modeled with a HEA.

3.1. HEA Modeled Impacts

The HEA for the TWE Project was completed using best-available scientific information regarding the primary indicators of quality greater sage-grouse habitat and the known anthropogenic impacts to that

habitat. The Draft Report for the HEA completed for the TWE Project is attached to this mitigation plan. Regulatory and resource agency staff, Non-Governmental Organizations (NGOs), and researchers generally agree on the potential direct impacts to greater sage-grouse and its habitat, and how to quantify these known impacts for the TWE Project. Direct loss of habitat resulting from ground-disturbing activities, construction related traffic and noise, and habitat loss associated with the footprint of the physical structures are the known potential impacts that can be accounted for in the HEA model. Compensatory mitigation, which may include mitigation projects undertaken by TransWest or in-lieu fees, will be applied to these potential direct impacts to ensure that there is no net loss of modeled habitat services as a result of TWE Project construction, operation and maintenance.

The total habitat service losses anticipated with the TWE Project construction, operation, and maintenance are provided in Table 1. Discounted service-acre-years (DSAYs) is the currency used by HEAs. The anticipated habitat service gains to be created with mitigation projects are also measured in DSAYs. Within the, the modeled impacts of the TWE project are considered to be fully offset when the DSAYs produced by the proposed mitigation project mix equal or exceed 3,733,029 DSAYs (the Total Habitat Services Lost from Table 1).

Table 1. Habitat Services Lost in the Analysis Area Over the Lifetime of the TWE Project (Modeled Years 1–104*).

State	Permanent Disturbances Modeled	Habitat Services in the Assessment Area at Baseline Condition (DSAYs over lifetime of the TWE Project assuming no development)	Habitat Services Lost in the Assessment Area (DSAYs lost over lifetime of the TWE Project)
Wyoming	AC/DC converter station and transmission tower pads	102,603,325	1,101,889
Colorado	transmission tower pads	71,739,071	1,374,208
Utah	transmission tower pads	73,696,032	1,256,932
Total	AC/DC converter station and transmission tower pads	248,038,428	3,733,029

* For the purposes of this analysis, the TWE Project lifetime is defined as the period between the TWE Project initiation and full recovery of vegetation. There are three years of construction and a year of reclamation, which is followed by a period of vegetation recovery. To be conservative, it was assumed that sagebrush will take 100 years to recover its full habitat service level after reclamation.

3.2. Other Potential Impacts

The HEA captures direct disturbances from the TWE Project construction, operation, and maintenance, and the indirect disturbance from noise and human presence during the years of construction. The effects of operating transmission lines on greater sage-grouse have not been established, are poorly understood, and require more research (Utah Wildlife in Need Cooperative [UWIN] 2010a, 2010b).

Literature, agency personnel, and the USFWS have identified the following potential impacts of transmission lines:

- Introduction and spread of invasive plant species in habitat;
- Collision and electrocution hazards;
- Decreased lek attendance near transmission corridors;
- Habitat fragmentation and habitat loss caused by behavioral avoidance of transmission corridors;
- Increased public access and associated impacts (e.g., noise, trash); and
- Increased predation by raptors and corvids due to the presence of transmission structures.

The HEA does not model indirect disturbance caused by the transmission line after construction is complete because insufficient information is available to characterize and quantify these effects. No "peer-reviewed" manuscripts have reported results from experimental studies that document greater sage-grouse avoidance of tall structures, increased predation related to avian predators using tall structures as perches, increased mortality attributed to collisions, or habitat degradation and/or fragmentation attributed to tall structures (UWIN 2010). Steenhof et al. 1993 and Lammers and Collopy 2007 provide substantial evidence on the use of transmission lines for nesting raptors and the effectiveness (or lack thereof) of perch deterrents, respectively; however, they provide very little insight on effects of transmission lines on greater sage-grouse. Lammers and Collopy (2007) discuss that perch deterrents did not have an effect on the observed number of greater sage-grouse predators and sagebrush conservation may better serve greater sage-grouse populations. Furthermore, ongoing research performed by Dr. James Sedinger of the University of Nevada – Reno and his colleagues, studying the Falcon to Gondor transmission line in eastern Nevada, has resulted in over ten years of data indicating that impacts to greater sage-grouse are more attributed to natural predation, wildfire impacts-habitat impacts from cheatgrass invasion, habitat fragmentation, and fitness of females (Nonne et al. 2013). The presence of the power line itself does not directly or indirectly result in increased mortality or a reduction in overall breeding success (Nonne et al 2013).

TransWest has addressed these potential impacts through adherence to the BLM spatial and timing stipulations identified in the DEIS as well as the development of effective reclamation and maintenance procedures, efficient and timely construction, environmental protection measures, traffic and access management, and avoidance of leks as discussed in Section 4.3.

4. Mitigation Measures

4.1. Avoidance and Minimization

TransWest has avoided and minimized both direct and indirect potential impacts to greater sage-grouse to the maximum extent practicable through the routing and siting process, adhering to buffers, and utilizing existing corridors and establishing environmental protection measures (EPMs) for construction, operation and maintenance activities. During the routing and siting process, TransWest has identified and will adhere to the appropriate spatial and timing stipulations surrounding leks and other greater

sage-grouse habitat to the extent practicable. TransWest has also worked with state and federal agencies, local governments, and local working groups and NGOs to avoid and minimize impacts to greater sage-grouse habitats.

To minimize potential direct and indirect impacts, the transmission line and ancillary facilities were located following existing linear corridors (e.g., other transmission lines, pipelines, roads, designated west-wide energy corridor) where possible. For instance, in Colorado TransWest's proposed action is to co-locate with the existing Craig-Bonanza 345 kV transmission line. In Utah, TransWest's proposed action is to co-locate with the existing Mona-Bonanza 345 kV transmission line. Co-location with existing transmission lines would minimize potential incremental impacts.

4.1.1. Environmental protection measures

The TWE Project includes EPMs to maintain environmental quality during construction, operation, and maintenance activities. Implementation of the EPMs will help TransWest to avoid and/or minimize impacts to greater sage-grouse and its habitat. The EPMs are listed the following appendices to the Preliminary Plan of Development (May 2014):

Avian Protection Plan, addresses measures to minimize risk to avian species, including greater sage-grouse, during construction and operation of the TWE Project. The Avian Protection Plan follows the guidance of the Avian Power Line Interaction Committee (APLIC).

Traffic and Transportation Plan, includes measures that limit roads to the minimum distance and width necessary for construction and operation of the transmission line, limit non-approved use and introduction of weeds by unauthorized vehicles, and control dust from roads and other surface disturbances. These measures minimize the potential for direct mortality of greater sage-grouse by vehicles, substantially reduce the potential for degradation of greater sage-grouse habitat from weeds and dust.

Fire Prevention Plan, addresses fire preventative measures to minimize fire risk during construction of the TWE Project.

Reclamation Plan, includes measures to reduce the impact of construction on greater sage-grouse habitat by re-establishing vegetation and reducing habitat degradation, including the use of seed mixes compatible with greater sage-grouse habitat and monitoring to ensure successful reclamation.

Noxious Weed Plan, includes measures to prevent the introduction or transport of noxious or invasive weeds and control thereof, thus reducing potential habitat degradation.

Stormwater Pollution Prevention Plan, includes measures to reduce erosion and sedimentation, thus reducing potential habitat degradation both on and off-site.

Spill Prevention, Containment, and Countermeasures Plan, includes measures that reduce the chance of contamination from spills affecting habitat adjacent to the construction area.

Dust Control and Air Quality Plan, includes measures to minimize fugitive dust and air quality impacts that could affect greater sage-grouse habitat.

Operation and Maintenance Plan, includes measures to avoid and minimize potential impacts during operation and maintenance.

4.2. HEA Modeled Mitigation

The avoidance and minimization measures discussed above substantially avoid known impacts to greater sage-grouse and minimize impact to their habitat. However, even with these measures in place, there are unavoidable potential impacts to habitat from the construction and operation of the TWE Project.

The HEA quantified the long-term and interim loss of habitat services (measured in DSAYs) resulting from unavoidable potential impacts (Table 1). The HEA used the same habitat services metric to quantify the habitat services to be gained by implementing habitat improvement measures selected by the interagency HEA Technical Advisory Team (See Table 2 in the Draft HEA Report, Attached). These measures include fence marking and removal, sagebrush restoration and enhancement, juniper removal, and purchase of conservation easements. The estimated DSAYs returned per one acre or one mile of each mitigation measure is provided in Table 2. The analysis also produced a cost per DSAY gained for each habitat improvement measure based on the average cost of mitigation project implementation (See Tables 6 and 8 in the Draft HEA Report, Attached).

Table 2. Mean Discounted Service-Acre-Years Gained for Each Mitigation Measure Modeled in the HEA.

Conservation Measure	General Method	Mean Habitat Services Gained (present value service-acre-years per unit)
Fence removal and marking with flight diverters*	Fence marking within 3 km of leks and in other high risk areas (e.g., winter concentration areas, movement corridors)	3,597 per mile of fence marked
	Fence removal within 3 km of leks and in other high risk areas	3,597 per mile of fence removed
Sagebrush restoration and improvement projects	Seeding sagebrush and bunchgrass understory	1,751 per acre of disturbance treated
	Transplanting containerized sagebrush stems and seeding bunchgrass understory	4,556 per acre of disturbance treated
	Planting seedlings and seeding bunchgrass understory	1,935 per acre of disturbance treated
Juniper/conifer removal	Lop and scatter Phase I† juniper	480 per acre treated
	Cut-pile-cover or mastication of Phase II[2] juniper	328 per acre treated
	Mastication of Phase III† juniper and seeding bunchgrass understory	197 per acre treated
Conservation easements	Land purchase (baseline value service credit) applying the annual maintenance and monitoring fee to every 5,000 acres of easement.	650 per acre purchased§

* Although fence removal is more effective at removing the threat of sage-grouse collision than fence marking, both measures were modeled as having the same benefit due to a limitation in the model.

† Phases of juniper describe the dominance of this vegetation on the landscape. Phase I is a sagebrush-dominated landscape with scattered juniper, Phase II is a landscape comprising a 50:50 mixture of sagebrush and juniper, and Phase III is a landscape dominated by juniper.

§Estimated using the average habitat services value per acre in the Assessment Area, because no specific easements have been proposed.

A mitigation package will be developed that describes a mitigation project mix that will produce a net balance of habitat services over the lifetime of the TWE Project. The mitigation package will consist of conservation easements (at 100% baseline habitat service level credit), sagebrush restoration and enhancement (including juniper removal), fence marking and removal, and other mitigation projects not modeled in the HEA where justified (e.g., understory seeding and enhancement of mesic habitats).

4.2.1. Mitigation Project Types

Descriptions of the mitigation project types modeled in the HEA are provided below. These mitigation projects are consistent with recommendations provided by the USFWS. TransWest is not limited to these mitigation project types for mitigation credit.

Fence Marking and Removal

Based on Christiansen (2009) it has been demonstrated that each mile of fence within 2 miles of leks kills up to 53 greater sage-grouse per year. This threat can be eliminated by removing fences or significantly reduced by increasing the visibility of fences. Christiansen (2009) estimated a 70% reduction

in mortalities could be expected along marked sections of fence. Stevens (2011) similarly predicted that marking fences with vinyl reflectors (flight diverters) reduced collision rates by up to 74%.

To eliminate the threat of collisions, fences would be removed or marked with flight diverters similar to those used in the Christiansen (2009), Wolfe (2007), and Stevens (2011) studies to increase fence visibility to greater sage-grouse. Fences will be removed where possible. Where removal is not possible, two flight diverters would be installed between each fence span (4 m post-to-post). Priority areas for fence removal and marking would be:

- Sections of fence known to cause greater sage-grouse collisions,
- Fences within 2 km (1.2 mi) of leks (Braun 2006; Stevens 2011) or other high risk area,
- Fences in areas with low slope and terrain ruggedness (Stevens 2011), and
- Fence segments bounded by steel t-posts with spans greater than 4 m (Stevens 2011).

Once fences have been removed or marked, local annual mortality due to fence collisions will be substantially reduced. This mitigation project type will be used on a limited site-specific basis per recommendations from the USFWS. As described in Section 2.2, all mitigation projects will be sited in the same state where the impact occurred and in a manner consistent with the priorities identified in the BLM's IM 2013-142 and Order 3330.

The HEA calculated that 3,597 service-acre-years would be created for every mile of fence marked (with annual maintenance) or fence removed over the lifetime of the TWE Project.

Sagebrush Restoration and Enhancement

Sagebrush restoration and enhancement creates new habitat for greater sage-grouse and can be used to create corridors between existing sagebrush patches to produce contiguous habitat. Habitat for greater sage-grouse consists of a mosaic of plant communities dominated by sagebrush and a diverse grass and forb understory. This conservation measure increases the quality and quantity of habitat within the landscape, contributing to the long-term survival and success of the greater sage-grouse.

New habitat for greater sage-grouse will be created by establishing sagebrush and understory grasses and forbs in disturbed areas (e.g., roads, unreclaimed pipeline corridors, well pads, burned areas). These mitigation areas are in pre-existing areas of surface disturbance, not areas disturbed by the TWE Project. Vegetation disturbance from the TWE Project will be restored as described in the Plan of Development. All mitigation projects will be sited in the same state where the impact occurred and in a manner consistent with the priorities identified in the BLM's IM 2013-142 and Order 3330. Where possible, mitigation projects will be placed strategically to decrease habitat fragmentation by connecting existing habitats. All treatments will have monitoring plans and funding to conduct monitoring until the treatment is determined to be successful.

Sagebrush can be seeded, planted as seedlings, or transplanted (i.e., containerized stems). Because seeded sagebrush can take several decades to grow to a size that provides habitat for greater sage-grouse, the HEA determined that planting containerized stems can be the most economical and

successful option in many cases. Sagebrush restoration and enhancement projects will include understory (grass and forb) treatments.

The value of sagebrush restoration depends on the method used; methods that result in faster plant establishment have higher value. For every acre of disturbance planted with sagebrush seedlings and seeded with bunchgrass, 1,935 service-acre-years would be created. For every acre of disturbance planted with containerized sagebrush stems and seeded with bunchgrass, 4,556 service-acre-years would be created.

Juniper Removal

Fire suppression and other post-settlement conditions have allowed western juniper to spread into areas previously dominated by grasses, forbs, and shrubs. Many areas have experienced an estimated 10-fold increase in juniper over the last 130 years (Miller et al. 2005). The expansion of juniper and other conifer species reduces habitat for greater sage-grouse and other sagebrush obligate species that depend on large patches of sagebrush-dominated vegetation. Sagebrush cover decreases with juniper encroachment as the vegetation transitions into woodland.

Most juniper communities are still in a state of transition. Miller et al. (2005) characterized three stages of woodland succession:

- Phase I (early) – trees are present but shrubs and herbs are the dominant vegetation that influence ecological processes (hydrologic, nutrient, and energy cycles) on the site;
- Phase II (mid) – trees are codominant with shrubs and herbs and all three vegetation layers influence ecological processes on the site;
- Phase III (late) – trees are the dominant vegetation and the primary plant layer influencing ecological processes on the site.

Sites in Phase I or II successional stages often retain a significant understory of grasses and forbs, so removal of Phase I or II can produce immediate habitat benefits for greater sage-grouse (NRCS 2010; USFWS recommendations). Therefore juniper/conifer removal projects used for mitigation will focus primarily on areas in the early to mid stages of succession (i.e., Phase I or Phase II) with no cheatgrass component. Removal of juniper/conifer will be done by mechanical means without the use of fire or chemicals. Phase I juniper/conifer will be treated by having a field crew walk from tree-to-tree, cutting them into pieces and scattering them on-site (lop and scatter). Phase II juniper/conifer will be treated by using a masticator, a large mechanical device that goes from tree-to-tree and demolishes the tree with whirling blades; debris is then left on site (mastication).

All juniper/conifer removal projects will include understory treatment, where needed, and vegetation monitoring until the understory vegetation is established. Locations of removal projects will be selected with guidance from the Oversight Committee so that each treatment site provides value to the local greater sage-grouse population. Mitigation projects will be located in the same state where the impact occurred and in a manner consistent with the priorities identified in the BLM's IM 2013-142 and Order 3330 (Section 2.2).

The value of juniper/conifer removal in the HEA depended on the density of juniper removed (i.e., Phase I, Phase II, or Phase III juniper). The HEA calculated that 480 service-acre-years are created for every acre of Phase I juniper removed, 328 service-acre-years for every acre of Phase II juniper removed, and 197 service-acre-years for every acre of Phase III juniper removed with understory seeding over the lifetime of the TWE Project.

Bunchgrass and Forb Seeding

Bunchgrasses, as opposed to rhizomatous grasses, are recognized as an important component of greater sage-grouse nesting and brood-rearing habitats (Connelly et al. 2000; Crawford et al. 2004). The structure and abundance of bunchgrasses influence the quality of a site for nesting greater sage-grouse. Tall, dense, residual grass in nesting habitat improves hatching success by providing cover for incubating females (Cagney et al. 2010). Herbaceous cover may provide scent, visual, and physical barriers to potential predators (DeLong et al. 1995, as cited in Connelly et al. 2000). In addition to providing cover from predators, forbs are an important food source for greater sage-grouse broods.

Greater sage-grouse nesting and brood-rearing habitat will be improved by seeding native bunchgrasses and forbs into existing sagebrush stands or into adjacent disturbance. Understory seeding project sites will be selected in coordination with the Oversight Committee to maximize the benefit of these mitigation projects for greater sage-grouse. Objectives for these mitigation projects and criteria for success will be developed in coordination with the Oversight Committee.

While not captured in the TransWest HEA because of lack of available data, using results from other similar HEA models that contained bunchgrass variables, including the model for the Energy Gateway West transmission project, overseeding bunchgrass in 1-acre of sagebrush habitat is approximately 5% of the services returned by removing 1-acre of Phase I juniper. As a result, it is estimated 24 service-acre-years would be returned for each acre of overseeding. A greater number of service-acre-years are created when areas of disturbance (i.e., no vegetation) are seeded with bunchgrass. Using results from other similar HEA models indicates that overseeding bunchgrass in 1-acre of disturbed habitat is equivalent to approximately 25% of the services returned by removing 1-acre of Phase I juniper. As a result, it is estimated 120 service-acre-years would be returned for each acre of seeding in disturbed areas over the life of the TWE Project.

Conservation Easements

Conservation easements may be purchased and managed to remove or reduce threats to greater sage-grouse. The purchase of easements can prevent future greater sage-grouse habitat destruction or degradation near urban areas or other industrial developments.

Conservation easements purchased for mitigation would focus on areas or locations that demonstrate the highest need for protection and potential for reducing habitat fragmentation. Conservation easements would be purchased and managed in coordination with the Oversight Committee. Specific locations of conservation easements would depend on availability of easements for purchase, but would generally follow the priorities identified in the BLM's IM 2013-142 and Order 3330.

The HEA calculated that, on average, 650 service-acre-years would be created per acre of conservation easement purchased, assuming the easement is maintained over the life of the TWE Project. Greater credit could be possible if the easement was maintained in perpetuity. This total does not include the value of any subsequent habitat improvements to the property and assumes the proponent receives 100% credit for the baseline habitat-service level of the property.

4.2.2. Specific Mitigation Projects

In the final mitigation plan, TransWest will include viable mitigation projects/opportunities which meet mitigation goals and strategy. Specific mitigation projects will be selected in coordination with the Oversight Committee following the recommendations and guidelines provided by the states, BLM, Western, and USFWS. Mitigation projects may be located on either public or private land. Although only five mitigation measures are modeled, TransWest is not bound to only those project types. If other project types are recognized by the Oversight Committee as providing greater sage-grouse population or habitat benefits similar to those modeled in the HEA, then these mitigation projects may be included in future updates of this Plan.

Potential mitigation sites would be evaluated to determine their current state, the type of mitigation that would be most beneficial, and the potential for that mitigation project to meet the success criteria defined by the Oversight Committee. Mitigation projects that confer the greatest potential benefit to greater sage-grouse and have a high probability of success will be given priority.

4.2.3. In-lieu fees

For all or a portion of the compensatory mitigation, TransWest may employ an in-lieu fee approach that considers the cost of purchasing or implementing a mitigation project and monitoring and managing that project over the life of the TWE Project. TransWest may pay mitigation fees into accounts that will fund mitigation projects that benefit greater sage-grouse and their habitats. Refer to Section 2.2 for general/minimum criteria for selection of mitigation projects that would utilize in-lieu fees. TransWest will work with the Oversight Committee to identify the appropriate organizations to receive and manage in-lieu fees in each state, as well as to set standards for the mitigation projects funded by those fees.

Mitigation may include programs that are currently being pursued by other entities where there is opportunity for TransWest to provide financial support. Support of such identified mitigation projects would be in the form of direct funding or in-lieu fees to assist the entity proposing the mitigation project with implementation. The balance of the mitigation dollars owed (the total dollar cost estimated by the HEA minus the costs of the specific mitigation projects) may be provided through in-lieu fees.

In Wyoming, the Wyoming Wildlife and Natural Resource Trust (WWNRT) has been identified as a potential organization that could receive and manage in-lieu fees for the TWE Project. The WWNRT is an independent state agency governed by a nine-member citizen board appointed by the Governor and works closely with the WGFD and Wyoming state government.

4.2.4. Monitoring and maintenance

Monitoring the success of mitigation measures and maintaining each measure to ensure continued success are important elements the mitigation strategy. TransWest and the Oversight Committee will identify a monitoring and maintenance approach for each mitigation project or project type in the mitigation package. Each mitigation project will require a monitoring and mitigation facilitator role that could be filled by agencies, private landowners, NGOs, environmental or reclamation contractors, or TransWest.

The final monitoring and maintenance approach for each mitigation project will be formalized in a monitoring and maintenance strategy that will be reviewed by the Oversight Committee annually, or as necessary. The duration of monitoring may vary for each mitigation project type. The strategy will also include success criteria for each mitigation project, such as:

- Measurable increase in desired vegetation structure and composition in a restoration area when compared to a suitable control area
- Adherence to conservation easement contract terms
- Removal of stated acreage of encroaching juniper stands

5. Conclusion

Reliable, cost-effective electricity is a basic necessity for Americans' quality of life and for the health and prosperity of American industry. The TWE Project not only will ensure delivery of a vital renewable wind-energy resource for a growing America but also will create jobs, support environmental protection, enhance tax revenues, and further strengthen the nation's energy foundation for the future. TransWest is committed to developing the TWE Project in an environmentally responsible manner using best available science and best management practices from the electric transmission industry. TransWest's greater sage-grouse mitigation plan is consistent with Order 3330 and *"A Strategy for Improving Mitigation Policies and Practices of The Department of the Interior"* by utilizing a landscape-scale, science-based approach to avoid, minimize and compensate for potential impacts to greater sage-grouse that may result from development of the TWE Project.

6. References

Braun, C.E. 2006. A Blueprint for Sage-Grouse Conservation and Recovery. Tucson: Grouse Inc.

Bureau of Land Management (BLM). 2013. TransWest Express Transmission Project. Draft Environmental Impact Statement. BLM Wyoming State Office and Western Area Power Administration. June 2013.

Cagney, J., E. Bainter, B. Budd, T. Christiansen, V. Herren, M. Holloran, B. Rashford, M. Smith, and J. Williams. 2010. Grazing influence, objective development, and management in Wyoming's greater sage-grouse habitat with emphasis on nesting and early brood rearing. University of Wyoming Cooperative Extension Service. B-1203, March 2010.

Christiansen, T. 2009. Fence Marking to Reduce Greater Sage-grouse (*Centrocercus urophasianus*) Collisions and Mortality near Farson, Wyoming – Summary of Interim Results. Wyoming Game and Fish Department. Available at: http://pbadupws.nrc.gov/docs/ML1108/ML110830116.pdf. Accessed March 2014.

Connelly, J.W., M.A. Schroeder, A.R. Sands, and C.E. Braun. 2000. Guidelines to manage sage grouse populations and their habitats. Wildlife Society Bulletin 28:967–985.

Connelly, J. W., S. T. Knick, M. A. Schroeder, and S. J. Stiver. 2004. Conservation assessment of greater sage-grouse and sagebrush habitats. Western Association of Fish and Wildlife Agencies. Unpublished Report. Cheyenne, WY, USA.

Crawford, J.A., R.A. Olson, N.E. West, J.C. Mosely, M.A. Schroeder, T.D. Whitson, R.F. Miller, M.A. Gregg, and C.S. Boyd. 2004. Synthesis paper: ecology and management of sage-grouse and sage-grouse habitat. Journal of Range Management 57:2–19.

DeLong, A.K., J.A. Crawford, and D.C. DeLong, Jr. 1995. Relationships between vegetational structure and predation of artificial sage grouse nests. Journal of Wildlife Management 59:88–92.

Department of the Interior. 2013. Improving Mitigation Policies and Practices of the Department of the Interior, Department of the Interior Secretarial Order 3330. October 31, 2013. Washington D.C.

Idaho Sage-grouse Advisory Committee. 2006. Conservation Plan for the Greater Sage-grouse in Idaho. July 2006. 477 pp.

Lammers, W.M. and M.W. Collopy. 2007. Effectiveness of avian predator perch deterrents on electric transmission lines. Journal of Wildlife Management 71:2752-2758.

Miller, R.F., J.D. Bates, T.J. Svejcar, F.B. Pierson, and L.E. Eddleman. 2005. Biology, ecology, and management of western juniper. Oregon State University, Technical Bulletin 152. June 2005. 77 pp.

Natural Resources Conservation Service (NRCS). 2010. Oregon sage-grouse habitat improvement initiative: a strategic approach to Farm Bill conservation program delivery. Oregon Implementation Plan, March 2010. Available at:

http://www.nrcs.usda.gov/Internet/FSE_DOCUMENTS/nrcs142p2_041539.pdf Accessed March 2014.

Nonne, D., E. Blomberg, and J. Sedinger. 2013. Dynamics of greater sage-grouse (*Centrocercus urophasianus*) populations in response to transmission lines in central Nevada. Progress Report – Year 10. University of Nevada – Reno, Department of Natural Resources and Environmental Sciences. Reno, NV. February 2013.

Steenhof, K., M.N. Kochert, and J.A. Roppe. 1993. Nesting by raptors and common ravens on electrical transmission line towers. Journal of Wildlife Management 57(2): 271-281.

Stevens, B. 2011. Impacts of fences on greater sage-grouse in Idaho: collision, mitigation, and spatial ecology. M.S. thesis, University of Idaho, Moscow.

Stiver, S.J., A.D. Apa, J.R. Bohne, S.D. Bunnell, P.A. Deibert, S.C. Gardner, M.A. Hilliard, C.W. McCarthy, and M.A. Schroeder. 2006. Greater Sage-grouse Comprehensive Conservation Strategy. Western Association of Fish and Wildlife Agencies. Unpublished Report. Cheyenne, Wyoming.

Utah Wildlife in Need Cooperative (UWIN). 2010a. Contemporary knowledge and research needs regarding the potential effects of tall structures on sage-grouse (*Centrocercus urophasianus* and *C. minimus*). UWIN Cooperative: Utah Wildlife in Need, Rocky Mountain Power, and Utah Department of Natural Resources. September 2010. Available online at http://utahcbcp.org/files/uploads/TallStructuresReportSeptember202010.pdf. Accessed May 2014.

UWIN. 2010b. Contemporary knowledge regarding the potential effects of tall structures on sage-grouse (*Centrocercus* spp.) and other wildlife in the Western United States. UWIN Cooperative: Utah Wildlife in Need, Rocky Mountain Power, and Utah Department of Natural Resources. September 2010. Available online at http://utahcbcp.org/files/uploads/TallStructureLitReview28July.pdf. Accessed May 2014.

UWIN. 2011. Protocol for Investigating the Effects of Tall Structures on Sage-grouse (*Centrocercus* spp.) within Designated or Proposed Energy Corridors. http://www.utahcbcp.org/htm/tall-structure-info. Accessed March 2014.

Wolfe, D.H., M.A. Patten, E. Shochat, C.L. Pruett, and S.K. Sherrod. 2007. Causes and patterns of mortality in lesser prairie-chickens (*Tympanuchus pallidicinctus*) and implications for management. Wildlife Biology 13 (Suppl. 1):95–104.

ATTACHMENT

DRAFT REPORT: Greater Sage-grouse Habitat Equivalency Analysis for the TransWest Express Project

All numbers in this draft report are provisional and may be subject to change pending agency review and additional quality checks.

Prepared by:

TRANSWEST EXPRESS LLC

May 2014

Table of Contents

Overview of Habitat Equivalency Analysis 2

Overview of the Habitat Equivalency Analysis Process for the TWE Project 6

Overview of the Habitat Equivalency Analysis Methods Used 7

Habitat Equivalency Analysis Results 18

Literature Cited 21

Appendices

A: Greater Sage-Grouse Habitat Service Metric for the TransWest Express Project

B: Quantification of Baseline Habitat Service Level

C: Quantification of Habitat Service Losses

D: Quantification of Habitat Service Gains Produced by Habitat Restoration and Mitigation Measures

E: Assignment of National Gap Analysis Program (GAP) Vegetation Classifications to Categories for HEA Modeling

TransWest Express LLC's (TransWest) **TransWest Express Project** (TWE Project) is a proposed extra high voltage, direct current (DC) transmission system extending from south-central Wyoming to southern Nevada. The proposed transmission line would cross four states (Wyoming, Colorado, Utah, and Nevada) on lands owned or administered by the BLM, United States Forest Service (USFS), National Park Service (NPS), Bureau of Reclamation (BOR), Utah Reclamation Mitigation and Conservation Commission (URMCC), various state agencies, Native American tribes, municipalities, and private parties. The TWE Project would provide the transmission infrastructure and capacity necessary to deliver cost-effective renewable energy produced in Wyoming to the Desert Southwest region (California, Nevada, Arizona), ultimately helping contribute to a cleaner world, strengthen the electric grid, and provide much-needed electricity to millions of homes and businesses every year. The TWE Project will deliver enough clean, sustainable energy to power nearly 2 million homes and reduce greenhouse-gas emissions equivalent to taking 1.5 million cars from the road.

The ±600 kilovolt (kV) DC transmission line would be approximately 725 to 750 miles in length (depending upon the alternative selected), located within a 250-foot wide right-of-way (ROW). The TWE Project includes ground-disturbing activities associated with the construction of above-ground transmission lines and includes transmission tower locations, access roads, a ground electrode line, a ground electrode site, fly yards, material yards, two AC/DC converter stations (a northern terminal and a southern terminal), pulling/tensioning areas, and work areas. The TWE Project has been sited to avoid and minimize greater sage-grouse (*Centrocercus urophasianus*) lek buffers and occupied habitat. However, complete avoidance is unachievable and portions of the TWE Project cross designated habitat for greater sage-grouse (BLM's Preliminary General Habitat [PGH]) in Wyoming, Colorado, and Utah. As a result, TransWest has coordinated with the BLM, Western Area Power Administration (Western), U.S. Fish and Wildlife Service (USFWS), Wyoming Game and Fish Department (WGFD), and Colorado Parks and Wildlife (CPW), and Utah Division of Wildlife Resources (UDWR) to develop a mitigation strategy to compensate for the unavoidable loss of greater sage-grouse habitat that would potentially occur as a result of the TWE Project construction, operation and maintenance in areas of greater sage-grouse habitat.

The mitigation approach TransWest will implement for the TWE Project will follow the guidance provided by BLM IMs IM 2013-142, 2012-043, and 2012-044 and Department of Interior Secretarial Order 3330 (Order 3330). Collectively, these provide guidance for greater sage-grouse habitat management and mitigation for pending transmission rights-of-way in Preliminary Priority Habitat (PPH) and Preliminary General Habitat (PGH). These policies state that transmission rights-of-ways having disturbances greater than 1 linear mile or 2 acres require cooperation between the BLM, project proponents, and other appropriate agencies to develop and consider implementation of appropriate regional mitigation to avoid or minimize habitat and population-level effects to greater sage-grouse.

Under these policies, offsite and onsite mitigation can include in-kind or out-of-kind mitigation. In-kind is defined as the replacement or substitution of resources that are of the same type and kind of those

being impacted. Out-of-kind is defined as replacement or substitutions of resources that while related are of equal or greater overall value to public lands. IM 2013-142 also identifies that the BLM may accept monetary contributions, how they may be used, and that mitigation may be conducted on non-Federal lands.

The BLM, working in concert with the USFWS, has developed a *Framework for Sage-grouse Impacts Analysis for the TransWest Express Transmission Project* (Framework). The Framework addresses TWE Project-related impacts to greater sage-grouse habitat that bear directly on listing factors considered by the USFWS when evaluating the need to provide full listing protection under the ESA. The Framework specifies the use of HEA to scale mitigation and compensate for the loss of habitat services over the life of the TWE Project. HEA is a science-based, peer-reviewed method of scaling compensatory mitigation requirements to potential TWE Project-related effects, measured as a loss of habitat services from pre-disturbance conditions (Allen et al. 2005; Dunford et al. 2004; King 1997; Kohler and Dodge 2006; National Oceanic and Atmospheric Administration 2006, 2009). Habitat services include those ecosystem features (i.e., physical site-specific characteristics of an ecosystem) and ecosystem functions (i.e., biophysical processes that occur within an ecosystem) that support wildlife and human populations (King 1997).

In compliance with IM 2012-43, IM 2013-142, Order 3330, and the Framework, TransWest has completed an HEA to determine the amount of compensatory mitigation necessary to offset potential impacts to greater sage-grouse resulting from the construction, operation, and maintenance of the TWE Project. The HEA produced an estimate of the permanent and interim potential loss of greater sage-grouse habitat services as a result of vegetation loss, noise, and human presence anticipated with TWE Project construction and operation. The HEA also modeled mitigation measures that may be implemented to offset the potential lost habitat services.

The following sections provide overviews of HEA, the HEA process for the TWE Project, the methods used for the HEA, the results of the HEA, and potential types of mitigation measures that could be used to compensate for habitat loss. Detailed methods excerpt from the TWE Project's HEA Plan are provided in the appendices to this report.

Overview of Habitat Equivalency Analysis

HEA is a science-based, peer-reviewed method of quantifying interim and permanent habitat injuries, measured as a loss of habitat services from pre-disturbance conditions, and scaling compensatory habitat requirements to those injuries (King 1997; Dunford et al. 2004; Allen et al. 2005; Kohler and Dodge 2006; National Oceanic and Atmospheric Administration [NOAA] 2006, 2009). Habitat services include those ecosystem features (i.e., physical site-specific characteristics of an ecosystem) and ecosystem functions (i.e., biophysical processes that occur within an ecosystem) that support wildlife and human populations (King 1997).

Habitat services are generally quantified using a metric that represents the functionality or quality of habitat (i.e., the ability of that habitat to provide wildlife "services" such as nest sites, forage, cover from predators, etc.). When wildlife habitat is the primary service of interest, areas with the highest habitat service levels are those areas with highest habitat quality. Interim (or short-term) habitat injuries are those services that are absent during certain phases of the project that would have been available if that disturbance had not occurred (e.g., temporary vegetation losses, temporary soil partitioning, temporary displacement of wildlife populations). Permanent habitat injuries are those habitat injuries remaining after project completion and interim reclamation and recovery are complete (e.g., permanent vegetation loss, permanent loss of wildlife or fisheries populations, irrecoverable impacts to soils or water as a result of contamination).

HEA uses a service-to-service approach to scaling. HEA does not assume a one-to-one trade-off in resources (e.g., number of acres). Rather, HEA balances the number of services lost with those that are gained as a result of conservation activities (NOAA 2006). For example, one acre of land with a diverse vegetative structure and abundant tree canopy can support higher numbers of nesting songbirds (the habitat service of interest) than one acre of land with few trees and little vegetative diversity. The two land parcels, although equal in size, provide unequal habitat services.

What Does Habitat Equivalency Analysis Do?

HEA is an economics model that:

- Quantifies current habitat services provided in a project area or landscape (commonly referred to as the baseline habitat service level)
- Quantifies the interim and permanent injuries to the baseline habitat service level
- Determines appropriately scaled restoration and conservation activities to offset habitat services lost as a result of project impacts

Benefits of Habitat Equivalency Analysis

The benefits of HEA include:

- High credibility – the approach has been evaluated and documented in scientific peer-reviewed literature and has held up in numerous court cases
- Quantitative rather than qualitative in nature
- Equations are straightforward, but have enough input variables to allow flexibility in project design

- Provides a replicable method for negotiation of mitigation ratios, acceptable compensatory restoration, and/or fines
- Valuable planning tool; can be used to evaluate the cost of multiple compensatory mitigation measures
- Applicable to any ecosystem type where an appropriate habitat services metric can be defined
- Currently the most commonly used method by natural resource trustees to assess damages to ecosystems
- Used by federal regulatory agencies, such as the U.S. Fish and Wildlife Service, NOAA, BLM, Environmental Protection Agency, Department of Interior, U.S. Army Corps of Engineers

When Habitat Equivalency Analysis Should Be Used (Chapman 2004)

HEA is an appropriate tool for scaling mitigation:

- When habitat services can be defined or modeled
- When quantification of project impacts is possible
- When replacement of services lost is feasible
- When conservation methods are sufficiently known

Compensation Components

Compensation for impacts includes two components: (1) recovery of the injured area (primary restoration; Figure 1), and (2) compensation for the interim loss of habitat services occurring prior to full recovery (compensatory restoration; Figure 2).

HEA quantifies the habitat services lost during the lifetime of a project compared to baseline (Area X in Figure 1) and scales the compensatory project (mitigation project) so that it provides services that are equal to that loss (Area Y in Figure 2). Baseline refers to the condition of the resources and quantity of habitat services that would have existed had the disturbance not occurred. The quantity of services lost (Area X) depends on the extent of the injury and the time required for restoration; actions taken to accelerate the rate of primary restoration would decrease the interim loss of habitat services, requiring less compensatory restoration. In some cases, full restoration of the lost services may not be feasible, in which case the area required for compensation (Area Y) would be larger. Compensatory restoration may occur off-site (e.g., the purchase of additional habitat), or on-site through habitat improvements

that increase habitat services above baseline (e.g., non-native vegetation removal, shrub thinning, or understory planting).

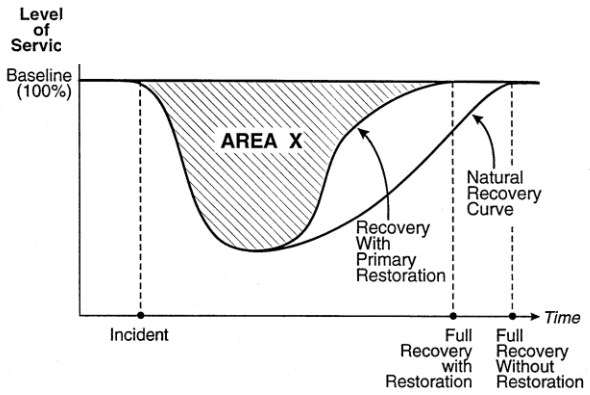

Figure 1. Changes in habitat service level compared to the baseline service level during construction and restoration (copied from King 1997). Area X represents the services lost at an injury site with Primary Restoration expressed as percent of baseline.

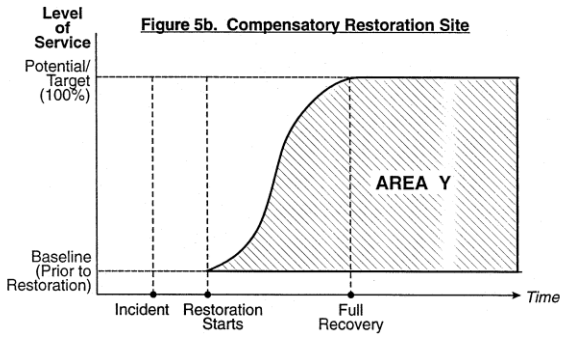

Figure 2. Changes in habitat service level with compensatory restoration (copied from King 1997). Area Y represents the services gained at the compensatory restoration site expressed as percent of potential/target level less baseline (pre-restoration) percent.

Measuring Habitat Services (Ecological Economics)

Quantifying the services provided by an ecosystem is a complex task. This complexity can be reduced through the use of an attribute, or metric, that provides a measure of the services of interest. The metric must be able to capture the relative differences in the quality and quantity of services being provided before and after restoration and between primary and compensatory sites (NOAA 2009).

Measurements of habitat services over the lifetime and area of a project are used in the HEA. These measurements have three components: land area, service level, and time. The relative service level can be quantified using a metric that measures or scores one or more key habitat elements for a species or wildlife community of interest (e.g., vegetation stem density, vegetation type, nest density, percentage of canopy cover, proximity to critical habitat, etc.). Habitat services are commonly expressed in service-acres (one year) or service-acre-years (multiple years).

Overview of the Habitat Equivalency Analysis Process for the TWE Project

Completion of the HEA process for the TWE Project Agency Preferred Alternative required close coordination with the BLM, Western, and other appropriate agencies and stakeholders (the HEA Technical Advisory Team, hereafter). Such coordination ensures that the best available scientific data were used, the habitat service metric was appropriate for resources in the TWE Project area, the results of the HEA are understood, and the compensation offsets the interim and permanent loss of habitat services modeled. The following steps will be completed as part of the development of the HEA for the TWE Project:

1. **Establishing baseline habitat services prior to disturbance.**

   TransWest has worked closely with the HEA Technical Advisory Team to finalize a habitat services metric that will quantified the baseline greater sage-grouse habitat services available prior to TWE Project construction. Appendix A provides information related to the development of the habitat services metric that served as the basis for quantifying baseline habitat services and determining TWE Project impacts and appropriate mitigation. Appendix B presents information related to how this metric was applied to establish baselines habitat services for the TWE Project area. Development of the baseline habitat service metric presented in Appendix A considered the best available scientific information regarding greater sage-grouse habitat and response to disturbance.

2. **Quantifying the permanent and interim losses to the baseline service level that result from the TWE Project disturbance.**

   Permanent and interim losses of habitat services caused by the construction and operation of the TWE Project were subtracted from the baseline habitat services. Direct and indirect losses that remain following reclamation efforts and vegetation recovery in the ROW over the life of the TWE Project will provide the basis for assessing the adequacy of mitigation proffered by TransWest. Appendix C describes the approach that was used to assess the direct and indirect losses that will occur as a result of TWE Project construction and operations.

3. **Identifying appropriate mitigation measures that may be used to compensate for lost services.**

TransWest worked the HEA Technical Advisory Team to identify mitigation measures that may be used to compensate for the permanent and interim losses of habitat services. All mitigation measures would be subject to appropriate land management agency or landowner approval, permits, and planning. Appendix D describes the methods that were used to quantify habitat service gains resulting from mitigation measures.

In the HEA process, the benefits of mitigation measures must be quantifiable using the habitat services metric. Additional mitigation measures with benefits that cannot be quantified in the HEA (e.g., brood rearing habitat improvement and understory improvement measures) will be considered separately in TransWest's Mitigation Plan and their compensatory value determined in coordination with the lead agencies and other stakeholders.

4. **Quantifying the amount of mitigation necessary to compensate for the losses to baseline services that remain after the TWE Project implementation.**

   Once final mitigation measures have been identified and approved by TransWest, the lead agencies and involved stakeholders, the average habitat service gain and cost per service returned were quantified for each mitigation measure. The resulting values will be balanced with the services lost to determine the compensatory mitigation appropriate to offset the permanent and interim loss of greater sage-grouse habitat services resulting from development of the TWE Project. This balancing will occur in TransWest's Mitigation Plan with a proposed mitigation project mix. TransWest's Mitigation Plan that documents the scaled compensatory mitigation will be provided to BLM and Western as a voluntary applicant-committed mitigation measure for greater sage-grouse.

Overview of the Habitat Equivalency Analysis Methods Used

The following sections provide an overview of methods used to develop the HEA models that were applied to assess the loss of greater sage-grouse habitat services associated with the TWE Project development and the benefits of various conservation project types that may be proposed for mitigation.

Development of Habitat Service Metric

To quantify the habitat services (e.g., greater sage-grouse habitat functionality) provided by an ecosystem, a habitat service metric is developed that scores key habitat elements for the species. Scoring habitat services is a critical step in the HEA process because it provides a way to quantitatively measure the quality of specific habitat functions in a specific area. The habitat metrics used in the HEA must be able to capture the relative differences in the quantity of services provided before and after construction and conservation-focused activities. Habitat services often have three components—land

area, service level, and time—and are commonly expressed in service-acres (one year) or service-acre-years (service-acres summed over multiple years).

The greater sage-grouse habitat services metric for the TWE Project was developed collaboratively by the HEA Technical Advisory Team. The focus of the metric was to capture changes in greater sage-grouse habitat services over time with vegetation removal and recovery. Using this approach, lost habitat services (decreases in habitat quality) must be replaced with like services. The HEA does not assume a one-to-one trade-off in resources (e.g., number of acres of greater sage-grouse habitat affected), but instead determines compensation based on the habitat services those acres provide (e.g., development in high-quality greater sage-grouse habitat would have higher compensation levels than development in lower-quality habitat that provides fewer services).

The habitat service metric developed for the TWE Project included variables identified by the peer-reviewed literature as having influence on the quality of greater sage-grouse habitat, including dominant vegetative components and anthropogenic influences (Table 1). The variables included were limited to those for which reliable and consistent data were available across the TWE Project area. For each of the variables, a habitat service score ranging from 0 to 3 (zero to high services) was assigned for categories like those defined in the Sage-Grouse Habitat Assessment Framework Multi-scale Habitat Assessment Tool (Stiver et al. 2010). Categorical variables were more appropriate than continuous variables due to the resolution of the remotely sensed vegetation data available for the length of the TWE Project. The breaks between scores were primarily based on information contained in the literature regarding greater sage-grouse habitat use and selection. When literature did not allow for direct quantification of the HEA scores, professional judgments of the HEA Technical Advisory Team informed by the available peer-reviewed literature were used. When a particular variable matched literature-based optimal conditions, that variable was given a service score of 3.

The metric for greater sage-grouse habitat services used in this HEA is an additive model (Table 1) with a score adjustment for the presence of fences posing a high collision risk to greater sage-grouse during the lekking season. Each cell in the analysis area is scored separately by summing the scores of Variables 01 through 08. The summed score is then multiplied by a factor that reduces the score where high risk fences are present. Each of the variables and the fence collision score adjustment is described in detail in Appendix A.

The metric is only applied to areas that contain occupied greater sage-grouse habitat. The assessment area was first clipped to the BLM's Priority General Habitat (PGH). Then, land cover types typically avoided by greater sage-grouse are assigned a metric score of 0 (provides no habitat services) before the metric was applied to the remaining areas. Disturbances of these lands require no mitigation in the HEA. These avoided land cover types include all forest types, urban areas, open water, some introduced vegetation types, roadways, well pads, mine footprints, areas <100 meters (m) from roadways with >6,000 annual average daily traffic (AADT), and <25 m of paved roads with <6,000 AADT and heavily

traveled gravel roads (multiple sources per U.S. Fish and Wildlife listing decision in Federal Register; Johnson et al. 2011). The specific GAP vegetation classifications that were included in these avoided land cover types are listed in Appendix E.

All variables were weighted evenly. Weights were not applied because there was not adequate information in the literature to support the use of one specific weight over another. The importance of sagebrush was already intrinsically weighted higher than other vegetation types due to the number of variables that measured an aspect of sagebrush vegetation (for which non-sagebrush vegetation types would score low). Comparisons of the final baseline maps to maps of known greater sage-grouse use indicated that the metric performed well to distinguish between high-quality and low-quality greater sage-grouse habitat across the length of the TWE Project without adjusting the variable weights.

Greater sage-grouse habitat suitability publications vary in their baseline environmental conditions affecting a particular study site. Even studies within a single state may describe different suitable habitat conditions depending on elevation, precipitation zone, and other geographic or climatic factors affecting each study site. The habitat metric relied on generalizations presented in BLM et al. (2000), Cagney et al. (2009), Connelly et al. (2011), Connelly et al. (2000), Stiver et al. (2010), and other summary publications. Specific citations are given to support these generalizations when applicable. The same metric of habitat services was applied to the entire TWE Project area.

The HEA metric was used to score habitat service level for all areas on and within 2 kilometers (km) of the TWE Project footprint, including access roads and other infrastructure (Assessment Area). None of the habitat service losses modeled (vegetation loss, noise, and human presence) extended outside the Assessment Area. The Assessment Area was clipped to the greater sage-grouse PGH and partitioned by state (Wyoming, Colorado, and Utah). The final Assessment Area centerline length varied by state.

Table 1. Anthropogenic and Habitat Variables Used as a Metric of Greater Sage-grouse Habitat Services.

Variable Number	Variables	3	2	1	0	Primary Citations
VAR01	Distance to high-traffic (>6,000 AADT) road, such as an interstate, federal, or state highway (meters)	>1,000	650–1,000	100–650	N/A*	Craighead Beringia South (2008); Johnson et al. (2011); Pruett et al. (2009)
VAR02	Distance to low-traffic (<6,000 AADT) paved roads, heavily travelled gravel roads, well pads, mine footprints, transmission substations (meters)	>200	50–200	25–50	N/A*	Connelly et al. (2004); Craighead Beringia South (2008); Johnson et al. (2011); Pruett et al. (2009)
VAR03	Percent slope	<10	10–30	30–40	>40	Beck (1977); Lincoln County Sage Grouse Technical Review Team (2004)
VAR04	Distance to occupied lek† (kilometers)	0–6.4	6.4–8.5	>8.5	N/A	Cagney et al. (2009); Connelly et al. (2000); Connelly et al. (2011); Holloran and Anderson (2005)
VAR05	Sagebrush abundance index (% of vegetation that is sagebrush within a 1 km^2 moving window)	50–95	30–50 or >95	10–30	0–10	Carpenter et al. (2010); Walker et al. (2007); Aldridge and Boyce (2007); Aldridge et al. 2008; Wisdom et al. (2011)
VAR06	Percent sagebrush canopy cover	15–35	5–15 or >35	1–5	<1	Cagney et al. (2009); Connelly et al. (2000); Stiver et al. (2010)
VAR07	Sagebrush canopy height (centimeters)	30–80	20 to <30 or >80	5–20	<5	Crawford et al. (2004); Connelly et al. (2000); Stiver et al. (2010)
VAR08	Distance of habitat to sage or shrub dominant (meters)	<90	90–275	275–1,000	>1,000	BLM et al. (2000); Connelly et al. (2000); Lincoln County Sage Grouse Technical Review Team (2004)

* Lands less than 100 m from a high traffic road and less than 25 m from a low traffic paved road or high traffic gravel road were given a total metric score of 0 (provides no habitat services), not just a score of 0 for these individual variables.
† Leks were classified as active if their 10-year attendance average was greater than 0.

Quantification of Habitat Service Losses

The following sections describe the losses of habitat services that would likely occur as a result of the TWE Project construction and operation. These changes in the habitat service level were simulated in a GIS platform to produce data inputs for the HEA.

The HEA model calculates the present value of future changes to the baseline habitat service level with time caused by losses of habitat services with TWE Project development and gains of habitat services with mitigation projects. Economists call this process *discounting* and it is a standard part of the HEA model. Discounting converts services being provided in different time periods into current time period equivalents (Allen et al. 2005). Discounting results in a gradual increase in the service-acres provided by injured habitats over time, and the same rate of decrease in service-acres gained by habitat conservation over time. Consequently, credit for mitigation in the form of habitat conservation (increase in discounted service-acre-years) is greater when implemented early in the lifetime of the TWE Project than when implemented late in the lifetime of the TWE Project. This encourages early mitigation to offset habitat service losses, to ensure that long-term adverse effects to the resource are minimal. Likewise, the injury (i.e., loss of discounted service-acre-years) due to construction and operation of the TWE Project is greater when it occurs early in the project lifetime than when it occurs later in the project lifetime.

Ideally, the baseline habitat service level would account for all habitat service losses associated with existing environmental disturbances. This was done to the extent possible with the existing data for the Assessment Area. In some cases, existing habitat disturbances were not mapped in the baseline service level because they were not detected by the chosen habitat services metric, or because the data were unavailable for use in the baseline analysis. Omission of these disturbances is a conservative approach to the analysis of the TWE Project-related habitat service losses. When baseline disturbances are omitted, the analysis assumes that the habitats affected by the TWE Project are of higher-quality than they actually are, and thus require a greater amount of mitigation to offset the TWE Project-related habitat service losses.

Description of Changing Habitat Service Level by Project Milestone

The habitat services provided by the Assessment Area were calculated at TWE Project milestones that reflected varying levels of disturbance. The TWE Project milestones modeled with GIS data for the HEA are listed below.

1. **Baseline**—the baseline milestone quantifies habitat services available to greater sage-grouse before disturbance. The calculation of Baseline is described above and in Appendix B.
2. **Construction—**the construction milestone quantifies habitat services available to greater sage-grouse during the construction or operation of the AC/DC converter station proposed as part of the TWE Project and the construction of the transmission line and electrode grid. Magnitude of the loss of habitat services during construction is dependent on proximity to the TWE Project and the amount of new surface disturbance.
3. **Restoration**—the restoration milestone quantifies habitat services available to greater sage-grouse after substation and transmission line construction is complete and some services return with the reduction in noise and human presence.
4. **Recovery**—the recovery milestone quantifies habitat services available to greater sage-grouse after a vegetation type has recovered to the greatest extent expected after the TWE Project restoration is complete. Habitat services return to baseline conditions in restored areas with the time to recovery being dependent on the vegetation type.

Quantifying Habitat Service Losses during Construction

Snapshots of the changing habitat services over time are modeled using GIS-based tools for each of the milestones identified above for incorporation into the HEA. The HEA calculates the total interim and permanent habitat injuries associated with the TWE Project. Specifics of the GIS and HEA methods are provided in Appendix C.

Timing

A conceptual substation, transmission structure, and infrastructure layout was provided by TransWest from which all habitat service losses were calculated (Table 2). The transmission line is planned to be constructed over a period of 3 years in each state, which is concurrent for all states.

Direct Disturbance

The footprint of the TWE Project was provided electronically by TransWest. The footprint files specified the anticipated locations of and direct disturbance associated with access roads, the ground electrode grid and line, transmission towers, pulling/tensioning areas, an AC/DC converter station (the northern terminal), mid spans, material yards, and fly yards.

During the three Construction years, direct disturbance was defined as the loss of all habitat services within the entire construction footprint for the segment modeled (Table 3). Access roads were assumed to have a width of 10 m. The model did not capture temporal restrictions on the TWE Project construction required by the BLM, which may have resulted in high estimates of service losses in the three Construction years. In the Restoration year following construction, direct disturbance was still

defined as the loss of all habitat services in the construction footprint, because the vegetation had not regrown sufficiently to provide habitat. In the Recovery years, direct disturbance was defined as the loss of all habitat services in the footprint of permanent facilities (i.e., the AC/DC converter station and transmission structure pads). The direct disturbance in restored areas was returned at different rates depending on baseline vegetation type. There were four vegetation-based recovery endpoints: 1) agriculture and wetland (1 year after Restoration); 2) grassland and riparian (5 years after Restoration), 3) shrubs other than sagebrush (20 years after restoration); and 4) sagebrush (100 years after Restoration). The assignment of the GAP vegetation types to these four recovery endpoints is described in Appendix E.

Table 2. TWE Project Milestone Years

Project Year	Project Milestone
0	Baseline
1	Construction
2	Construction
3	Construction
4	Restoration
5	Recovery 1
6	--
7	--
8	--
9	Recovery 2
10	--
11	--
12	--
13–23	--
24	Recovery 3
25	--
26	--
27	--
28–103	--
104	Recovery 4; End of Analysis

Table 3. Direct Disturbance Levels Modeled by TWE Project Year and Disturbance Type

Project Milestones	Project Year Applied	Percent Baseline Services Present at each Milestone by Direct Disturbance Type		
		AC/DC Converter Station	Transmission Towers*	Access Roads, Transmission Lines, Ground Electrode Line, Ground Electrode Grid, and Temporary Infrastructure
Baseline	0	100%	100%	100%
Construction	1, 2, 3	0%	0%	0%
Restoration	4	0%	0%	0%
Progressive Vegetation Recovery	5 (Recovery 1)	0%	• 0% in tower pad† (500 ft^2) Elsewhere ‡: • 100% of agricultural and wetland baseline services • 20% of grassland and riparian baseline services • 5% shrub baseline services • 1% of sagebrush baseline services	• 100% of agricultural and wetland baseline services • 20% of grassland and riparian baseline services • 5% shrub baseline services • 1% of sagebrush baseline services
	9 (Recovery 2)	0%	• 0% in tower pad (0.06 acre) Elsewhere: • 100% of agricultural, wetland, grassland, and riparian baseline services • 25% shrub baseline services • 5% of sagebrush baseline services	• 100% of agricultural, wetland, grassland, and riparian baseline services • 25% shrub baseline services • 5% of sagebrush baseline services
	24 (Recovery 3)	0%	• 0% in tower pad (0.06 acre) Elsewhere: • 100% of agricultural, wetland, grassland, riparian, and shrub baseline services • 20% of sagebrush baseline services	• 100% of agricultural, wetland, grassland, riparian, and shrub baseline services • 20% of sagebrush baseline services
	104 (Recovery 4)	0%	• 0% in tower pad (0.06 acre) Elsewhere: • 100% of agricultural, wetland, grassland, riparian, shrub, and sagebrush baseline services	• 100% of agricultural, wetland, grassland, riparian, shrub, and sagebrush baseline services

* The guide lattice tower type is assumed for this analysis.
† Tower pad in this table refers to the permanent tower footprint.
‡ Elsewhere refers to construction roads that were reduced to two-track roads, or any areas where vegetation was cleared for Project construction that were subsequently revegetated during Restoration (e.g., staging areas).

Indirect Disturbance

In addition to the actual surface disturbance, indirect disturbance buffers were applied to reduce habitat services around the Project Footprint during active construction (Table 4). Within these buffers (>200 meters [m], 50–200 m, 25–50 m, or <25 m), the habitat services were scored by the metric as if they were in the same proximity to a secondary road (a paved road with <6,000 AADT or heavily travelled gravel road) to account for the disturbance associated with noise and human presence (see Appendix C,

Quantifying Loss of Habitat Services Due to Indirect Disturbances During Construction for additional detail).

After construction, the indirect disturbance buffers were dropped from everything except the AC/DC converter station. The noise associated with the operation of this station was characterized as a permanent indirect disturbance in the model. Little information has been published on greater sage-grouse habitat use near transmission lines. TransWest decided not to model disturbance due to transmission lines after construction is complete, because insufficient information was available to characterize and quantify these effects. Potential indirect impacts associated with transmission lines are discussed in detail in the TWE Project's DEIS.

Table 4. Indirect Disturbance Levels Modeled by TWE Project Year and Disturbance Type

Project Milestones	Project Year Applied	Indirect Disturbance Buffers* Applied by Disturbance Type		
		AC/DC Converter Station	Transmission Towers	Access Roads, Transmission Lines, Ground Electrode Line, Ground Electrode Grid, and Temporary Infrastructure
Baseline	0	None	None	None
Construction	1, 2, 3	Secondary Road	Secondary Road	Secondary Road†
Restoration	4	Secondary Road	None	None
Progressive Vegetation Recovery	5	Secondary Road	None	None
	9	Secondary Road	None	None
	24	Secondary Road	None	None
	104	Secondary Road	None	None

* "Secondary Road" indicates that the footprint of the disturbance was classified as having the same indirect disturbance as a secondary road in the GIS model and the scores of the surrounding vegetation decreased as defined by the habitat services metric.

† Construction of the ground electrode grid will be completed in the first year. No indirect disturbances were modeled for the ground electrode grid after Construction Year 1.

Quantification of conservation Benefit to Habitat Services

Habitat conservation measures (Table 5) were selected by the HEA Technical Advisory Team to be modeled in the HEA. These measures have been identified to improve greater sage-grouse habitat services and produced a benefit that could be measured by the habitat service metric used in this HEA. These conservation measures serve as a "toolbox" from which mitigation options may be selected by

TransWest for inclusion in a mitigation package.[1] The benefit (in service-acres) for each habitat conservation measure was calculated with GIS technology, using the same habitat service metric as was used to calculate habitat service losses.

The same conservative vegetation growth rates that were used to model vegetation recovery in the TWE Project footprint were applied to the habitat conservation measures proposed for mitigation. Conservative growth rates offset the potential for mitigation project failure in the model.

Three to five hypothetical mitigation project areas were selected to model each conservation measure. The variable scores were manipulated using GIS technology to approximate the change expected with implementation of the measure. The benefit of the measure was the difference in the service score before and after implementation. The mean benefit among the hypothetical mitigation project areas was entered into the HEA, where estimated time until full benefit and discount rate was applied to estimate the discounted service-acre-years gained per mitigation project area. The HEA assumed that the mitigation projects would be funded in the first year of the TWE Project construction.

The cost of the modeled habitat conservation measures was estimated by averaging the known cost of similar conservation projects previously implemented in Idaho and Wyoming—cost estimates from the Gateway West HEA (BLM 2013) were adjusted using a 3% annual inflation rate (equal to the discount rate used in this HEA) to bring the costs up to 2014 dollars. These cost estimates were used to calculate the price per service-acre-year. An HEA scales the mitigation package (i.e., funding to create habitat services) to offset the loss of habitat services over the lifetime of the TWE Project. Appendix D describes the calculation used to quantify the benefit of the mitigation projects compared to baseline.

[1] Proposed mitigation may not be limited to the modeled conservation measures. The benefit of some measures could not be measured using the habitat service metric (e.g., improvement of brood rearing habitat, improvement of understory vegetation).

Table 5. Potential Mitigation Projects Modeled in the HEA

Mitigation Project Type	Brief Project Description	Anticipated Benefits	Average Cost of Implementation*,§
Fence removal and marking with flight diverters	Fences would be removed or marked in: 1) Sections of fence known to cause greater sage-grouse collisions, 2) Within 3 km (1.2 mi) of leks (Stevens et al. 2013) or other high risk areas, 3) In areas with low slope and terrain ruggedness (Stevens 2011), and 4) Where segments are bounded by steel t-posts with spans greater than 4 m (Stevens 2011).	• Reduce mortality due to greater sage-grouse collisions • Increase visibility of fences, where diverters are used • Increase contiguous patches of shrub-steppe habitat • Remove localized grazing pressure where fences are removed, thereby increasing local habitat quality (e.g., bunchgrass cover)	• $1,485 per mile ($920 per km) for fence removal or initial installation of flight diverters, and $320 per mile per year ($200 per km per year) for maintenance on flight diverters†
Sagebrush restoration and improvement projects	Seeding, planting seedlings, or transplanting containerized sagebrush plants (one plant per 5 m^2) and seeding a bunchgrass understory	• Create contiguous patches of shrub-steppe habitat with optimal sagebrush cover and height and a bunchgrass understory • Increase availability of high-quality nesting, brood rearing, and winter habitats	• $3,975 to $7,320 per acre ($9,820 to $18,090 per hectare), depending on method used
Juniper/conifer removal	Mechanical removal (lop and scatter, cut-pile-cover, or mastication) of juniper/confer adjacent to areas with optimal sagebrush cover and height	• Reverse juniper/conifer encroachment on shrub-steppe habitat to increase contiguous patches of greater sage-grouse habitat • Increase light penetration to support a forb and grass understory	• $180 to $2,120 per acre ($445 to $5,240 per hectare), depending on density of vegetation removed.‡
Conservation easements	Removes threat of specific land uses to sensitive wildlife populations	• Prevent greater sage-grouse habitat destruction or degradation near urban areas and oil and gas development • Reduce future fragmentation of shrub-steppe habitat	• $615 per acre ($1,515 per hectare) average purchase price • $2650 per year for each easement for maintenance and monitoring

* Cost of implementation includes a 50% markup for indirect costs, which include contract writing, supervision, clearances, monitoring, inspections, and vehicle costs.
† The cost of maintenance for the lifetime of the project is included in the HEA model and the resulting estimated cost per service-acre-year in Table 7.
‡ The cost of this treatment varies widely depending on the baseline vegetation. The lower end cost includes lop and scatter of Phase I juniper with no understory treatment. The upper end cost includes mastication of Phase III juniper and seeding a bunchgrass understory.
§ Costs were estimated for the Gateway West Transmission Line HEA (BLM 2013) and then adjusted using a 3% inflation rate to bring them up to 2012 to 2014 dollars. Mitigation funds provided in years after 2014 should be further adjusted for inflation.

HABITAT EQUIVALENCY ANALYSIS RESULTS

The following sections describe the results of the HEA for habitat service losses over the lifetime of the TWE Project and the results of the HEA for conservation measure benefits. These results are expressed as the discounted service-acre-years (DSAYs) lost or gained, which is the sum of the permanent and interim losses gains over the lifetime of the TWE Project with the economic discount rate applied. These results may be used to scale mitigation.

HEA Habitat Service loss Results

A separate HEA was run for each state where the TWE Project intersected greater sage-grouse habitat (Wyoming, Colorado, and Utah). The modeled habitat service level at each of the TWE Project milestones was entered into the HEA to calculate the present value of the habitat services lost over the lifetime of the TWE Project. A linear change in service level was assumed between modeled milestones. A summary of the estimated habitat service losses due to the TWE Project's construction, operation, and maintenance are provided in Table 6 for the full Analysis Area (i.e., 2-km buffer around Project footprint). These are the habitat service totals that need to be offset with mitigation. Service losses varied among states with differences in the buffered TWE Project centerline that intersected greater sage-grouse PGH, differences in baseline habitat quality, and the type of development.

Table 6. Habitat Services Lost in the Analysis Area Over the Lifetime of the TWE Project (Modeled Years 1–104).

State	Permanent Disturbances Modeled	Habitat Services in the Assessment Area at Baseline Condition (DSAYs over lifetime of the TWE Project assuming no development)	Habitat Services Lost in the Assessment Area (DSAYs lost over lifetime of the TWE Project)
Wyoming	AC/DC converter station and transmission tower pads	102,603,325	1,101,889
Colorado	transmission tower pads	71,739,071	1,374,208
Utah	transmission tower pads	73,696,032	1,256,932
Total	AC/DC converter station and transmission tower pads	248,038,428	3,733,029

HEA Conservation Benefit Results

A separate HEA was run for each habitat conservation measure. The habitat service increases modeled using GIS-based tools were entered into the HEA, along with estimates of time between receipt of funding and implementation of the measure, and time between implementation of the measure and full service benefit from the measure. The habitat service gains per unit area treated summed over the lifetime of the TWE Project are provided for each conservation measure in Table 7.

New habitat services (measured in DSAYs) and cost per services gained varied among conservation measures (Table 7). Conservation easements preserve existing habitat services in areas of potential development and can create new habitat services if existing land practices that are damaging to greater sage-grouse habitat are restricted.

Application of Results to a Mitigation Package

TransWest, BLM, and agencies will evaluate the services returned per habitat conservation measure, compare those services gained to the services lost as a result of the TWE Project, and develop an appropriate mitigation plan to compensate for services lost. This analysis is a decision-making support tool for the development of the mitigation plan.

To accomplish a 1:1 trade-off in habitat service-acre-years over the lifetime of the TWE Project per a traditional HEA, habitat conservation measures from Table 7 should be selected to offset 100% of the habitat service losses quantified for each segment in Table 6. The recommended approach to this process is outlined in the steps below.

1. Select the habitat conservation measures most appropriate for each segment from Table 5 and define the proportion of each measure to be used as mitigation (e.g., mitigation in Segment A will be composed of w% fence modification, x% sagebrush restoration, y% juniper removal, and z% conservation easements).
2. Calculate the habitat services to be replaced using each habitat conservation measure. The total of the habitat services replaced using each measure should equal the total services lost in Table 6.
3. Calculate the cost to implement each habitat conservation measure in each segment. Multiply the habitat services to be replaced using a measure by the cost per habitat services gained for that measure from Table 7.
4. Sum the costs of the habitat conservation projects separately for each segment. The total would be the mitigation for the modeled habitat service losses in that segment.

Table 7. Mean Present Value Habitat-Service-Acre Gained and Average Cost for Each Habitat Conservation Measure

Conservation Measure	General Method	Mean Habitat Services Gained (DSAYs per unit)	Cost per Services Gained (U.S. dollars per DSAY) ‡
Fence removal and marking with flight diverters*	Fence marking within 3 km of leks and in other high risk areas (e.g., winter concentration areas, movement corridors)	3,597 per mile of fence marked	$9.57
	Fence removal within 2 km of leks and in other high risk areas	3,597 per mile of fence removed	$0.41
Sagebrush restoration and improvement projects	Seeding sagebrush and bunchgrass understory	1,751 per acre of disturbance treated	$2.27
	Transplanting containerized sagebrush stems and seeding bunchgrass understory	4,556 per acre of disturbance treated	$1.61
	Planting seedlings and seeding bunchgrass understory	1,935 per acre of disturbance treated	$2.30
Juniper/conifer removal	Lop and scatter Phase I† juniper	480 per acre treated	$0.38
	Cut-pile-cover or mastication of Phase II† juniper	328 per acre treated	$2.11
	Mastication of Phase III† juniper and seeding bunchgrass understory	197 per acre treated	$10.76
Conservation easements	Land purchase (baseline value service credit) applying the annual maintenance and monitoring fee to every 5,000 acres of easement.	650 per acre purchased§	$1.03

* Although fence removal is more effective at removing the threat of greater sage-grouse collision than fence marking, both measures were modeled as having the same benefit due to a limitation in the model. The cost of fence removal is much lower than marking because no ongoing maintenance is required.

† Phases of juniper describe the dominance of this vegetation on the landscape. Phase I is a sagebrush-dominated landscape with scattered juniper, Phase II is a landscape comprising a 50:50 mixture of sagebrush and juniper, and Phase III is a landscape dominated by juniper.

‡ Cost estimates include permitting and maintenance as described in Table 5.

§ Estimated using the average habitat services value per acre in the Assessment Area excluding scores of 0, because no specific easements have been proposed.

LITERATURE CITED

Allen, P.D. II, D.J. Chapman, and D. Lane. 2005. Scaling environmental restoration to offset injury using habitat equivalency analysis. In Economics and Ecological Risk Assessment: Applications to Watershed Management, edited by R.F. Bruins and M.T. Heberling, pp. 165–184. Boca Raton, Florida: CRC Press.

Beck, T.D.I. 1977. Sage grouse flock characteristics and habitat selection during winter. Journal of Wildlife Management 41:18–26.

Bureau of Land Management (BLM), U.S. Fish and Wildlife Service, U.S. Forest Service, Oregon Department of Fish and Wildlife, and Oregon Division of State Lands. 2000. Greater Sage-grouse and Sagebrush-steppe Ecosystem: Management Guidelines.

Bureau of Land Management (BLM). 2011. Draft Environmental Impact Statement for the Gateway West Transmission Line Project, Wyoming, Idaho, and Nevada. Cheyenne, Wyoming: U.S. Department of the Interior, Bureau of Land Management, Wyoming State Office. July 2011.

Bureau of Land Management. 2013. TransWest Express Transmission Project. Draft Environmental Impact Statement. BLM Wyoming State Office and Western Area Power Administration. June 2013.

Cagney, J., E. Bainter, B. Budd, T. Christiansen, V. Herren, M. Holloran, B. Rashford, M. Smith, and J. Williams. 2009. Grazing influence, management and objective development in Wyoming greater sage-grouse habitat with emphasis on nesting and early brood rearing. Unpublished report. Available at: http://gf.state.wy.us/wildlife/wildlife_management/sagegrouse/index.asp. Accessed December 2009.

Chapman, D.J. 2004. Habitat Equivalency Analysis: Overview and Case Example. Presentation to: EPA Science Advisory Board Committee on Valuing the Protection of Ecological Systems and Services

Christiansen, T. 2009. Fence Marking to Reduce Greater Sage-grouse (*Centrocercus urophasianus*) Collisions and Mortality near Farson, Wyoming – Summary of Interim Results. Wyoming Game and Fish Department. Available at: http://pbadupws.nrc.gov/docs/ML1108/ML110830116.pdf. Accessed January 2012.

Connelly, J.W., E T. Rinkes, and C.E. Braun. 2011. Characteristics of greater sage-grouse habitats. In Greater Sage-grouse Ecology and Conservation of a Landscape Species and its Habitats, edited by S.T. Knick and J.W. Connelly, pp. 69–83. Berkeley: University of California Press.

Connelly, J.W., M.A. Schroeder, A.R. Sands, and C.E. Braun. 2000. Guidelines to manage sage grouse populations and their habitats. Wildlife Society Bulletin 28:967–985.

Connelly, J.W., S.T. Knick, M.A. Schroeder, and S.J. Stiver. 2004. Conservation Assessment of Greater Sage-grouse and Sagebrush Habitats. Unpublished Report. Cheyenne, Wyoming: Western Association of Fish and Wildlife Agencies.

Craighead Beringia South. 2008. Monitoring Sage Grouse with GPS Transmitters, Implications for Home Range and Small Scale Analysis: A Preliminary Look. Jonah Interagency Mitigation and Reclamation Office. 2008 Wildlife Workshop.

Crawford, J.A., R.A. Olson, N.E. West, J.C. Mosely, M.A. Schroeder, T.D. Whitson, R.F. Miller, M.A. Gregg, and C.S. Boyd. 2004. Synthesis paper: ecology and management of sage-grouse and sage-grouse habitat. Journal of Range Management 57:2–19.

Dunford, R.W., T.C. Ginn, W.H. Desvousges. 2004. The use of habitat equivalency analysis in natural resource damage assessments. Ecological Economics 48(2004):49–70.

Gregg, M.A., J.A. Crawford, M.S. Drut, and A.K. DeLong. 1994. Vegetative cover and predation of sage-grouse nests in Oregon. Journal of Wildlife Management 58:162–166.

Holloran, M.T., and S.H. Anderson. 2005. Spatial distribution of greater sage-grouse nests in relatively contiguous sagebrush habitats. The Condor 107:742–752.

Johnson, D.H., M.J. Holloran, J.W. Connely, S.E. Hanser, C.L. Amundson, and S.T. Knick. 2011. Influences of environmental and anthropogenic features on greater sage-grouse populations, 1997–2007. In Greater Sage-grouse Ecology and Conservation of a Landscape Species and its Habitats, edited by S.T. Knick and J.W. Connelly, pp. 407–450. Berkeley: University of California Press.

King, D.M. 1997. Comparing ecosystem services and values, with illustrations for performing habitat equivalency analysis. Prepared by King and Associates, Inc., Washington, D.C., for U.S. Department of Commerce, Silvery Spring, MD.

Kohler, K.E., and R.E. Dodge. 2006. Visual_HEA: Habitat equivalency analysis software to calculate compensatory restoration following natural resource injury. Proceedings of 10th International Coral Reef Symposium, pp. 1611–1616.

Lincoln County Sage Grouse Technical Review Team. 2004. Lincoln County Sage Grouse Conservation Plan. Nevada. Available at: http://www.ndow.org/wild/conservation/sg/plan/SGPlan063004_R.pdf. Accessed January 2012.

Miller, R.F., J.D. Bates, T.J. Svejcar, F.B. Pierson, and L.E. Eddleman. 2005. Biology, ecology, and management of western juniper. Oregon State University, Technical Bulletin 152. June 2005. 77 pp.

National Oceanic and Atmospheric Administration (NOAA). 2006. Habitat equivalency analysis: an overview. Available at: www.darrp.noaa.gov/library/pdf/heaoverv.pdf. Accessed July 2009.

NOAA. 2009. Restoration economics, habitat equivalency analysis. Available online at: http://www.csc.noaa.gov/coastal/economics/habitatequ.htm. Accessed on 7-6-2009.

Pruett, C.L., M.A. Patten, and D.H. Wolfe. 2009. Avoidance behavior by prairie grouse: implications for development of wind energy. Conservation Biology 23:5, 1253–1259.

Rogers, G.E. 1964. Sage grouse investigations in Colorado. Technical Bulletin No. 16. Denver: Colorado Game, Fish and Parks Department, Game Research Division.

Stevens, B. 2011. Impacts of fences on greater sage-grouse in Idaho: Collision, mitigation, and spatial ecology. Master's Thesis. University of Idaho, Moscow.

Stiver, S.J., E.T. Rinkes, and D.E. Naugle. 2010. Sage-grouse Habitat Assessment Framework. Unpublished report. Boise, Idaho: Bureau of Land Management, Idaho State Office.

Wallestad, R.O. 1971. Summer movements and habitat use by sage grouse broods in central Montana. Journal of Wildlife Management 35:129–136.

APPENDIX A

Greater Sage-Grouse Habitat Service Metric for the TransWest Express Project

Text is excerpt from the TWE Project HEA Plan.

DEVELOPMENT OF HABITAT SERVICE METRIC FOR HABITAT EQUIVALENCY ANALYSIS

A habitat service metric was developed for the greater sage-grouse (*Centrocercus urophasianus*) using variables identified in the peer-reviewed literature as representative of greater sage-grouse habitat. Habitat service levels are intended to reflect both the quality of the habitat and the ability of the birds to use the habitat. For each of the metric variables, a habitat service score ranging from 0 to 3 (no services [contributing no value to habitat] to high services [optimal habitat]) was assigned, similar to the greater sage-grouse habitat assessment framework developed by Stiver et al. (2010) and the greater sage-grouse habitat suitability index developed by LaGory et al. (2012). Scoring habitat services is a critical step in the HEA process, because it provides a way to measure the relative quality of specific habitat functions in a specific area.

The scores for this HEA are primarily based on information contained in the literature regarding greater sage-grouse habitat use and selection. When literature did not allow for direct assignment of value ranges for HEA scores, professional judgments, which were based on peer-reviewed literature, were used. Professional judgments are associated with specific literature references when possible and/or confirmed with academic and agency biologists.

When a basic life requisite of greater sage-grouse is absent (vegetation is absent, the area is forested, or high levels of disturbance are present), the cell being scored is assigned a total service value of 0. When a measurements for particular variable within the metric (e.g., % sagebrush cover) matches literature-based descriptions of sub-optimal conditions, that variable is given a service score of 0 (contributing no value to habitat), 1 (poor habitat), or 2 (moderate habitat). For example, sagebrush cover <1% would score a 0, cover of 1%–5% would score a 1, and cover of 5%–15% or >35% would score a 2 for that variable. When measurements for a particular variable match literature-based recommended conditions, that variable is given a service score of 3 (optimal habitat). For example, sagebrush cover of 15%–35% would score a 3 for that variable.

Scoring of the variables is categorical and each variable is given the same weight in the model. This approach is based on the best available data and is consistent with the general approach of LaGory et al. (2012). LaGory et al. (2012) describe their approach as follows:

> In general, there was insufficient information in existing studies to determine relationships among variables and habitat suitability or relative contributions between variables/components. Therefore, for simplicity, we developed piecewise linear functions of suitability based on the assumption that all variables are of equal weight and applied these functions to geospatial layers to generate indices ranging from 0 (poor) to 100 (optimal). This approach is similar to that used for many of the U.S. Fish and Wildlife Service (USFWS) Habitat Suitability Index models in their Habitat Evaluation Procedure, (available at http://www.fws.gov/policy/ESMindex.html).

DRAFT

While the individual variables are not weighted, the number of variables relating to a habitat attribute (e.g., six for vegetation vs. one for slope) and the size of the buffers (e.g., 1,000 m for high traffic roads vs. 200 m for low traffic roads) give some attribute categories more influence than others. In the metric, there are three variables that score sagebrush characteristics (sagebrush abundance index, sagebrush % cover, and sagebrush canopy height), so areas that are not dominated by sagebrush will score low for these three variables, resulting in a lower overall score.

Greater sage-grouse habitat suitability publications vary in their baseline environmental conditions affecting a particular study site. Even studies within the same state may describe different suitable habitat conditions depending on elevation, precipitation zone, and other geographic or climatic factors affecting each study site.

No specific habitat studies have been conducted on the TWE Project's transmission line corridor alternatives, therefore the habitat metrics described below mostly rely on information presented in BLM et al. (2000), Cagney et al. (2009), Connelly et al. (2000), Connelly et al. (2011), and other summary publications. Specific citations are given to support the habitat model framework when applicable.

A single habitat service metric is applied to the entire TWE Project corridor in order to standardize results. This approach assumes that optimal habitat or poor habitat for greater sage-grouse looks the same (that is, measures the same for the variables in the metric) regardless of its location, despite regional differences in habitat features and availability.

As a result, the best available habitat at the edge of the species' range may not score as high as the best available habitat in the center of the species' range, unless they have the same measurements for the variables in the metric. The following sections describe the development of the habitat service model variables.

METRIC OF GREATER SAGE-GROUSE HABITAT SERVICES

The metric is only applied to areas that contain greater sage-grouse habitat. The assessment area was first clipped to the BLM's Priority General Habitat (PGH). Then, land cover types typically avoided by greater sage-grouse are assigned a metric score of 0 before the metric is applied to the remaining areas. Disturbances of these lands require no mitigation in the HEA. These land cover types include all forest types, urban areas, open water, some introduced vegetation types, roadways, well pads, mine footprints, areas <100 meters (m) from roadways with >6,000 annual average daily traffic (AADT), and <25 m of paved roads with <6,000 AADT and heavily traveled gravel roads (multiple sources per U.S. Fish and Wildlife listing decision in Federal Register; Johnson et al. 2011).

The metric for greater sage-grouse habitat services used in this HEA is an additive model (Table A1) with a score adjustment for the presence of fences posing a high collision risk to greater sage-grouse during the lekking season. Each cell in the analysis area is scored separately by summing the

scores of Variables 01 through 08. The summed score is then multiplied by a factor that reduces the score where high risk fences are present. Each of the variables and the fence score adjustment is described in detail below.

Descriptions of Additive Metric Variables

After areas of non-habitat (i.e., areas not suitable for greater sage-grouse or areas located outside the BLM's PGH boundaries) are assigned a metric score of 0, the remaining habitats are scored by adding the individual scores for the eight following variables.

VAR01 and VAR02 Distance to Roads and Highways

Research into the effects of roads on greater sage-grouse is varied. For instance in Colorado, Rogers (1964) mapped 120 leks with regard to distance from roads and found that 42% of leks were over 1.6 km (1 mile) from the nearest improved road, but that 26% of leks were within about 90 m (about 100 yards) of a county or state highway, and two leks were on a road. Connelly et al. (2004) also note the use of roads for lek sites. In contrast, Craighead Beringia South (2008) reported results from a 2007 to 2009 study of greater sage-grouse seasonal habitat use in Jackson Hole, Wyoming. Results indicate that greater sage-grouse avoid areas within approximately 100 m of paved roads. Similarly, Pruett et al. (2009) found that lesser prairie-chickens avoided one of the two highways in the study by 100 m; however, some prairie-chickens crossed roads and had home ranges that overlapped the highways, thus roads did not completely exclude them from neighboring habitat. Johnson et al. (2011) examined the correlation between trends in lek attendance and the environmental and anthropogenic features within 5- and 18-km buffers around leks. They found that lek attendance declined over time with length of interstate highway within 5 km, although the authors note that this trend was based on relatively few data points and no pre-highway data were available for comparison. Interstate highways >5 km away and smaller state and federal highways had little or no effect on trends in lek attendance. Thresholds less than 5 km were not examined.

In the habitat services metric, those habitats located within 100 m of a high-traffic (>6,000 AADT) paved road (an interstate highway or high-traffic federal or state highway, for example), or within 25 m of a low-traffic (<6,000 AADT) paved road (a low-traffic federal or state highway, for example) were considered to provide no services to greater sage-grouse due to traffic and associated noise/human disturbance and were given a full metric score of 0 (no services). Unpaved roads with high traffic loads (for example, oil and gas service roads, mine service roads, etc.) provide similar disturbance levels as paved roads with similar traffic loads (e.g., low-traffic state highway). To characterize this disturbance in the model, mine footprints and well pad footprints were classified and scored as if they were low-traffic roads, so that there are no habitat services within 25 m of these disturbances. The AC/DC converter station will also classified and scored as if it is a low-traffic road in the model to account for the noise and human presence associated with this facility.

Those habitats located farther than 200 m and 1,000 m, respectively, of a low-traffic road or high-traffic road were considered the most serviceable to greater sage-grouse (that is, exhibited no decrease in lek attendance) and given a score of 3. A logarithmic curve was fit between the highest

DRAFT

and lowest categories so that score increased with distance from the road to estimate the distance breaks associated with scores 1 and 2. A logarithmic rate of change simulates sound attenuation rates better than a linear rate of change (Crocker 2007). Conflicting research results regarding greater sage-grouse use near and on unpaved resource/collector roads (e.g., two-track roads) did not allow for quantification of the disturbance caused by these roads in the model.

While the application of distances to all scores (0–3) is not perfectly supported in the peer-reviewed literature, our approach places a penalty upon habitats that are bisected by all types of large roadways. Penalties are higher for roads that typically have higher traffic levels and risk to greater sage-grouse (e.g., mortality from collision, noise disturbance) than less-utilized secondary roads that generally have less traffic and implied risk.

VAR03 Slope

Slope was used to refine greater sage-grouse habitat potential. Greater sage-grouse generally use flat or gently sloping terrain (Connelly et al. 2011; Eng and Schladweiler 1972; Nisbet et al. 1983; Rogers 1964). Beck (1977) plotted the distribution of 199 greater sage-grouse flocks in Colorado and found that 66% of flocks were on slopes less than 5% and only 13% of flocks were on slopes greater than 10%. Areas with slopes greater than 40% are unsuitable for nesting habitat (Lincoln County Sage Grouse Technical Review Team 2004), but still have some value to greater sage-grouse and should be retained in the model (professional judgment of the agency biologists). Therefore, areas with less than 5% slope were assigned a habitat service score of 3, and those exceeding 10% subjectively received incrementally lower habitat service scores. Slopes >40% did not add value to the habitat and received a score of 0 for this variable, but these areas may provide habitat services depending on the scores for the other variables.

A terrain roughness index (TRI) was evaluated for use in place of the slope variable, as some studies have shown that it is a better indicator of greater sage-grouse use (Carpenter et al. 2010; Doherty et al. 2008; Doherty et al. 2010; Dzialak et al. 2011). However, there was substantial variation in the methods used to calculate TRI (e.g., measure of roughness used and analysis window size) and region evaluated (e.g., Alberta, Canada, vs. Powder River Basin, Wyoming) by these studies. Given this variation, it was not possible to identify literature-supported cutoffs between scores for use in the model.

DRAFT

Table A1. Additive Variables in the Metric of Greater Sage-grouse Habitat Services

Variable Number	Variables	3	2	1	0	Primary Citations
VAR01	Distance to high-traffic (>6,000 AADT) road, such as an interstate, federal, or state highway (meters)	>1,000	650–1,000	100–650	N/A*	Craighead Beringia South (2008); Johnson et al. (2011); Pruett et al. (2009)
VAR02	Distance to low-traffic (<6,000 AADT) paved roads, heavily travelled gravel roads, well pads, mine footprints, transmission substations (meters)	>200	50–200	25–50	N/A*	Connelly et al. (2004); Craighead Beringia South (2008); Johnson et al. (2011); Pruett et al. (2009)
VAR03	Percent slope	<10	10–30	30–40	>40	Beck (1977); Lincoln County Sage Grouse Technical Review Team (2004)
VAR04	Distance to occupied lek† (kilometers)	0–6.4	6.4–8.5	>8.5	N/A	Cagney et al. (2009); Connelly et al. (2000); Connelly et al. (2011); Holloran and Anderson (2005)
VAR05	Sagebrush abundance index (% of vegetation that is sagebrush within a 1 km^2 moving window)	50–95	30–50 or >95	10–30	0–10	Carpenter et al. (2010); Walker et al. (2007); Aldridge and Boyce (2007); Aldridge et al. 2008; Wisdom et al. (2011)
VAR06	Percent sagebrush canopy cover	15–35	5–15 or >35	1–5	<1	Cagney et al. (2009); Connelly et al. (2000); Stiver et al. (2010)
VAR07	Sagebrush canopy height (centimeters)	30–80	20 to <30 or >80	5–20	<5	Crawford et al. (2004); Connelly et al. (2000); Stiver et al. (2010)
VAR08	Distance of habitat to sage or shrub dominant (meters)	<90	90–275	275–1,000	>1,000	BLM et al. (2000); Connelly et al. (2000); Lincoln County Sage Grouse Technical Review Team (2004)

* Lands less than 100 m from a high traffic road and less than 25 m from a low traffic paved road or high traffic gravel road were given a total metric score of 0 (provides no habitat services), not just a score of 0 for these individual variables.
† Leks were classified as active if their 10-year attendance average was greater than 0.

DRAFT

VAR04 Distance to Lek (10-year Average Count >0 Males)

Current greater sage-grouse habitat management guidance uses occupied leks as focal points for nesting habitat management (Connelly et al. 2000; Connelly et al. 2011); therefore, distance to lek was used as a variable in the habitat services metric. These guidelines recommend protecting sagebrush communities within 3.2 km of a lek in uniformly distributed habitats and 5.0 km in non-uniformly distributed habitats. Holloran and Anderson (2005) studied nesting greater sage-grouse at 30 leks in central and western Wyoming and determined that 45% and 64% of female greater sage-grouse nested within 3.2 km and 5.0 km, respectively, of the lek where the hen was radio-collared. Moreover, statistical analyses suggested that the area of interest for nesting greater sage-grouse should be truncated at 8.5 km from a lek. Similar frequencies are reported in Cagney et al. (2009)—66% within 5.0 km and 75% within 6.4 km of a lek where the female bred.

Female greater sage-grouse do nest at distances greater than 8.5 km (farthest distance reported in Holloran and Anderson [2005] was 27.4 km), so all distances >8.5 km from occupied leks were given a service score of 1 to reflect some potential use by nesting greater sage-grouse. Areas within 6.4 km of a lek provide the highest service level, because they provide female grouse with forage, roost sites, and cover from predators or inclement weather during the lekking season, in addition to containing lekking habitat and nesting habitat (Cagney et al. 2009). Therefore, areas within 6.4 km of an occupied lek were assigned a service score of 3 for this variable. Between these distances (6.4–8.5 km), areas were assigned a score of 2 for this variable.

VAR05 Sagebrush Abundance Index

Walker et al. (2007) found that the proportion of habitat that was sagebrush within a 6.4-km moving window was a strong predictor of lek persistence in the Powder River Basin of Wyoming. The moving window is an analysis area that is larger than and centered on the cell being scored; in this case, the window is a 6.4-km buffer that moves as the cell being scored is changed. Areas with less than 30% of sagebrush within 6.4 km of the lek center had a lower probability of lek persistence. Aldridge and Boyce (2007) also used a moving window (1 km^2) to measure sagebrush cover and abundance. Their resource selection function found that greater sage-grouse selected nesting habitat that contained large patches (1 km2) of sagebrush with moderate canopy cover and moderate sagebrush abundance (i.e., heterogeneous distribution of sagebrush). Carpenter et al. (2010) found similar results in Alberta, Canada. Their top resource selection functions included a quadratic function for sagebrush abundance, which indicates that areas of moderate sagebrush abundance were selected more frequently than areas of homogenous sagebrush.

Aldridge et al. (2008) [per Wisdom et al. (2011)] found that at least 25% of the landscape in a 30.77-km analysis area needed to be dominated by sagebrush for greater sage-grouse persistence, with 65% being preferred. Wisdom et al. (2011) found that landscapes with less than 27% sagebrush were not different from landscapes from which greater sage-grouse have been extirpated. Similar to Aldridge et al. (2008), Wisdom et al. (2011) found that 50% sagebrush across a landscape was a good indicator of greater sage-grouse persistence.

DRAFT

The agency biologists indicated that greater sage-grouse prefer higher sagebrush abundance in the southern part of their range than is indicated by these studies. For example, the Colorado Parks and Wildlife Avian Research Center has generally found a positive linear relationship between sagebrush abundance and measures of habitat selection (Brian Holmes, Colorado Parks and Wildlife, personal communication with Jon Kehmeier, SWCA, on February 13, 2013). Colorado Parks and Wildlife has not observed an upper inflection point in the proportion of the landscape covered in sagebrush where use or selection begins to drop, and suggest that the difference may be due to the structure and composition of the sagebrush community (that is, silver sagebrush mixed grassland rangelands of Alberta [Aldridge and Boyce 2007; Carpenter et al. 2010] vs. big sagebrush steppe [TWE Project Area]).

Sagebrush covering 50% to 95% of the landscape scored a 3 for this variable (Aldridge et al. 2008; Wisdom et al. 2011; professional judgment of the agency biologists). Sagebrush covering 30% to 50% or >95% scored a 2 for this variable (Aldridge et al. 2008). Sagebrush covering 10% to 30% scored a 1 (Walker et al. 2007; Wisdom et al. 2011) and sagebrush covering less than 10% scored a 0 for this variable.

VAR06 Sagebrush Canopy Cover

Recommended sagebrush canopy cover for greater sage-grouse habitat varies seasonally. Seasonal habitats were not modeled, but seasonal differences in the selection for sagebrush cover was considered when developing habitat services metrics. The seasonal habitat needs of greater sage-grouse are described below, followed by scoring of percent sagebrush cover in the habitat services metric.

Seasonal Habitat Use

Nesting

Connelly et al. (2000) cite 13 references to sagebrush coverage that range from 15% to 38% mean canopy cover surrounding the nest. Citations contained within Crawford et al. (2004) reported 12% to 20% cover and 41% cover in nesting habitat. In their species assessment, Connelly et al. (2000) conclude that 15% to 25% canopy cover is the recommended range for productive greater sage-grouse nesting habitat. This is also the range identified in the greater sage-grouse habitat assessment framework (Stiver et al. 2010) as providing the highest service level for greater sage-grouse based on a review of the available literature. Wallestad and Pyrah (1974) reported that successful nests were in stands where sagebrush cover approximated 27%. This cover range is used as a goal in some greater sage-grouse management guidelines (Bohne et al. 2007; BLM et al. 2000). Cagney et al. (2009) guidelines for grazing in grouse habitat, which use information synthesized from over 300 sources, state that hens tend to select an average 23% live sagebrush canopy cover when selecting nesting sites.

Greater sage-grouse in Utah use habitats with higher sagebrush canopy cover than is observed in the northern and eastern portions of the species range, possibly due to the relative scarcity of understory grasses in Utah (Renee Chi, BLM, personal communication with Ann Widmer, SWCA, on March 22, 2013). Nest sites in Wildcat Knoll (part of the Emery-Sanpete population of Utah) were located in areas

with an average of 33% shrub canopy cover for successful nests and 22% for unsuccessful nests (Perkins 2010). Nests (n = 50) in Parker Mountain were located at sites with an average canopy cover of 35.5% for big sagebrush and 32% for big sagebrush mixed with black sagebrush (Chi 2004; Renee Chi, BLM, personal communication with Ann Widmer, SWCA, on March 22, 2013). In the Sheeprock greater sage-grouse population, nest site shrub canopy cover measured an average of 62% in 2005 and 83.5% in 2006 (Robinson 2007).

Brood Rearing

Connelly et al. (2000) found that productive brood-rearing habitat should include 10% to 25% cover of sagebrush. This is the range used as a goal in greater sage-grouse management guidelines (Bohne et al. 2007; BLM et al. 2000). While sagebrush is a vital component of greater sage-grouse habitat, very thick shrub cover may inhibit understory vegetation growth and reduce the birds' ability to detect predators (Wiebe and Martin 1998).

Again, greater sage-grouse in Utah may use areas with higher canopy cover than is typical throughout the northern and eastern parts of their range. Grouse in the Sheeprock population were documented using areas with an average shrub canopy cover of 73% during brood rearing in 2005 and 2006 (Robinson 2007).

Winter

Connelly et al. (2000) cite 10 references to sagebrush coverage in winter-use areas that range from 15% to 43% mean canopy cover (Crawford et al. [2004] also cite two of these references in their assessment); however, they considered a canopy of 10% to 30% cover (above the snow) as a characteristic of sagebrush needed for productive greater sage-grouse winter habitat. This is the cover range used as a goal in greater sage-grouse management guidelines (Bohne et al. 2007; BLM et al. 2000). Greater sage-grouse in Utah may prefer higher cover in winter. In Emma Park, areas of high sagebrush cover were used disproportionally to their availability on the landscape, with an average of 38.3% sagebrush canopy cover in winter-use areas (Crompton and Mitchell 2005).

Scoring in Habitat Services Metric

In general, the recommended sagebrush cover for nesting habitats was intermediate to, and overlapped that of, brood-rearing and winter habitats. Thus, favorable conditions for nesting were given the highest scores for percent sagebrush cover in the greater sage-grouse habitat services metric.

This variable used the scores assigned by Stiver et al. (2010) for sagebrush cover categories in greater sage-grouse nesting habitat, with a slight adjustment to account for use of higher canopy cover in Utah. This adjustment is also consistent with the Colorado Greater Sage-Grouse Conservation Plan (Colorado Division of Wildlife et al. 2008). Sagebrush percent canopy cover of 15% to 35% was assumed to provide the highest level of services (score of 3) to nesting greater sage-grouse. This includes canopy covers that are 10% higher than the average ranges provided in Connelly et al. (2000) and Cagney et al. (2009). Areas with slightly less or more cover than this (55–15 or >35) were given a habitat services score of 2. Habitats with <5% cover received a score of 1.

VAR07 Sagebrush Canopy Height

Sagebrush canopy height is an important aspect of all greater sage-grouse seasonal habitats. As described above, seasonal habitat models will not be developed for the TWE Project. However, seasonal habitat requirements were considered when developing habitat metric values. The seasonal habitat needs of greater sage-grouse are described below, followed by scoring of percent sagebrush cover in the habitat services metric.

Seasonal Habitat Use

Nesting

Gregg et al. (1994, cited in Crawford et al. 2004) found that the area surrounding successful nests in Oregon consisted of medium-height (40 to 80 centimeters [cm]) sagebrush. Connelly et al. (2000) cite 11 references to sagebrush height that range from 29 to 79 cm mean height. In their assessment, Connelly et al. (2000) conclude that sagebrush with a height of 30 to 80 cm is needed for productive greater sage-grouse nesting habitat in arid sites and 40 to 80 cm in mesic sites. These ranges are supported by Stiver et al. (2010), who recommend a range of 30 to 80 cm, and BLM et al. (2000), which state that optimum greater sage-grouse nesting habitat consists of sagebrush stands containing plants 40 to 80 cm tall.

Winter

Important structural components in winter habitat include medium to tall (25–80 cm) sagebrush stands (Crawford et al. 2004). Connelly et al. (2000) cite 10 references to sagebrush height in winter habitat that range from 20 to 46 cm above the snow. Two studies measured the entire plant height and provided a range from 41 to 56 cm. In their assessment, Connelly et al. (2000) conclude that characteristics of productive winter habitat include sagebrush that is 25 to 35 cm in height above the snow. This is the height range used as a goal in greater sage-grouse management guidelines (Bohne et al. 2007; BLM et al. 2000).

Scoring in Habitat Services Metric

Sagebrush canopy heights that provided high-quality nesting habitat generally also provided high-quality winter habitat for greater sage-grouse. Thus, favorable conditions for nesting were given the highest scores for sagebrush canopy height in the greater sage-grouse habitat services metric.

The sagebrush cover scores assigned for nesting habitat in the greater sage-grouse habitat assessment framework by Stiver et al. (2010) to different sagebrush cover categories were assigned to this variable. Areas of sagebrush with a height of 30 to 80 cm were assigned a habitat services score of 3. As sagebrush canopy height decreases, the value of a sagebrush plant to provide cover for nesting females and their nests is diminished. Additionally, low-lying sagebrush is less available to greater sage-grouse during the winter due to snow cover. Areas with canopy heights greater than 80 cm provided intermediate levels of services because they may provide relatively poor cover for nesting greater sage-grouse and have foliage that is difficult for greater sage-grouse to access during mild and moderate winters. Sites with lower and higher sagebrush canopy heights were scored lower (sagebrush 12 to <30 cm or >80 cm in height received a score of 2). Areas with minimal sagebrush

DRAFT

canopy heights were considered to have the lowest habitat service value (sagebrush <20 cm received a score of 1).

VAR08 Distance to Vegetation Dominated by Sagebrush or Shrub

Greater sage-grouse use shrubby habitats including sagebrush during the brood-rearing season (Connelly et al. 2000) and for grouse movement and dispersal (Stiver et al. 2010). Close proximity to shrubby vegetation increases the service value of all vegetation types modeled because shrubby vegetation provides cover from predators, facilitates grouse movement, and supports population connectivity.

The Lincoln County Sage Grouse Technical Review Team (2004) identified proximity to sagebrush cover as an important component in habitat suitability of non-sagebrush, brood-rearing habitats (e.g., mesic lowland habitats, hay meadows). The Team considered brood-rearing areas within <100 yards, 100 to 300 yards, and >300 yards of sagebrush cover as suitable, marginal, and unsuitable habitat, respectively. Similarly, Stiver et al. (2010) considered mesic habitats <90 m, 90 to 275 m, and >275 m of sagebrush to be suitable, marginal, and unsuitable late brood-rearing/summer habitat, respectively. These categorizations support the concept of increasing service level with proximity to shrubs, particularly sagebrush.

The distance to vegetation dominated by sagebrush or shrub variable (VAR09) measured the distance of the cell being scored (regardless of its vegetation type) to the next nearest cell that was dominated by sagebrush or a shrub species, including willows. For this variable, cells <90 m, 20 to 275 m, and >275 m to a cell dominated by a shrub species were assigned scores of 3, 2, and 1, respectively. The scoring was applied to all vegetation types, because this variable is relevant to bird movement and dispersal from all habitat types.

Score Adjustment for Fences that Pose a High Risk for Collision

Habitat within and surrounding the TWE Project transmission line corridor is currently influenced by fences used for livestock management. These fences are typically constructed from barbed wire and are used to control livestock movements and vegetation use within grazing allotments and pastures, to delineate or protect private property and agricultural croplands, and to restrict livestock from improved and unimproved roadways.

Fence collisions have been reported as a cause of significant injury and mortality to grouse species (greater sage-grouse [Braun 2006; Call and Maser 1985; Connelly et al. 2004; Christiansen 2009; Danvir 2002; Stevens et al. 2012]; lesser prairie-chicken [Wolfe et al. 2007]; ptarmigan [Bevanger and Broseth 2000]; and red grouse, black grouse, and capercaillie [Baines and Summers 1997; Catt et al. 1994; Petty 1995]). In addition to direct mortality, fences provide corridors for mammalian predators increasing the opportunity for predation of hens and broods (Braun 1998). Unlike the additive variables in the metric, which are primarily meant to characterize use and avoidance of habitat by greater sage-grouse, the distance to high risk fences was added to account for the potential direct loss of greater sage-grouse (not greater sage-grouse avoidance of fences).

DRAFT

In Wyoming, Christiansen (2009) reported preliminary results of a multiple-year study (2005–ongoing) near Farson on greater sage-grouse fence strikes and mortalities and the utility of fence markers on reducing collisions. After installation of fence markers on portions of high-risk fences, grouse mortality decreased by 70%. Although the study did not compare the number of strikes with regard to distance to lek, the author recommends that fences should not be located within 0.25 mile (0.4 km) of leks.

In Idaho, Stevens (2011) and Stevens et al. (2012a; 2012b) evaluated the environmental features associated with greater sage-grouse fence collision risk, and tested the efficacy of reflective vinyl fence markers to reduce collision rates at eight study sites. Modeling of these data predicted marking reduced collision rates by 74% to 83% at the mean lek size and fence distance from the lek during the breeding season. Collision probability varied by region, topography, fence type, fence density, and lek proximity. Areas with high slope or terrain ruggedness generally showed lower collision risk than flat areas. Collisions were more common on fence segments bound by steel t-posts with spans between posts exceeding 4 m. Collision probability increased with fence length per km^2 and proximity to nearest active lek.

For this variable, fences segments having a high risk for collision were identified using the model by Stevens et al. (2013), which is determines the fence-collision risk from proximity to lek and a terrain roughness index (Equation 1).

Equation 1: $$\hat{y} = 78 * \quad (\beta_0 + \beta_1 * TRI + \beta_2 * distance)$$

Where:

$\hat{y}$ is an estimate of the total number of greater sage-grouse collisions over a 78-day lekking season for each 30-m pixel if a fence is present;

β_0 = -3.325 (per Bryan Stevens, personal communication with Ann Widmer, SWCA, on February 14, 2014);

β_1= -0.25;

β_2 = -0.0006;

TRI is a terrain roughness index calculated using ArcInfo; and

$distance$ is the distance from each 30-m pixel to the nearest greater sage-grouse lek in GIS using the Euclidean distance function (up to 3 km).

The additive metric score (the sum of VAR01 through VAR08) for a cell was multiplied by an adjustment factor that reduced the score if the cell was located within 3 km of a greater sage-grouse lek (i.e., it was scored by the Stevens et al. 2013 model) and there was a fence present in that cell. The adjustment factor for each probability of collision is provided in Table A2. Allotment boundaries were used as a surrogate for fence lines. Following the convention established by Stevens et al. 2013, the arbitrary threshold of 1 grouse collision per lekking season was used as the breaking point between our

score adjustment categories. The other category break was established based on a natural break in the data distribution.

Table A2. Cell score adjustment for the presence of fences posing a high collision risk.

$\hat{y}$ (prediction of the total number of greater sage-grouse collisions per lekking season)	Score adjustment factor
0.00-0.40	0.75
0.40-1.00	0.50
≥1.00	0

Here are three examples of the application of the fence score adjustment factor. In the first, there is a cell with an additive score of 10 (the sum of VAR01-VAR08) that is located within 3 km of a lek and has a fence running through it. The Stevens et al. 2013 model predicts 0.2 collisions per lekking season for a fence in that cell, so the additive score of 10 is multiplied by 0.75 for a final metric score of 7.5 for that cell. In the second example, there is another cell with an additive score of 10 that is located within 3 km of a lek and has a fence running through it. The Stevens et al. 2013 model predicts 1.4 collisions per year a fence in this cell, so the additive score of 10 is multiplied by 0 to produce a final metric score of 0 (no habitat services). In the third example, there is a cell with an additive score of 10 that has a fence running through it, but the cell is located >3 km from a lek. Stevens et al. 2013 model does not produce an estimated number of collisions for this cell, because it is located more than 3 km from a lek. This fence is considered to have a relatively low collision risk during the lekking season, so the cell retains its full value (no adjustment).

Collisions with fences may occur outside of the lekking season. Marking of fences located more than 3 km of a fence may be considered for mitigation. If so, they will be treated as if they have the lowest fence risk collision (0.00-0.39 collisions/year) for the purposes of modeling.

LITERATURE CITED

Aldridge, C.L., and M.S. Boyce. 2007. Linking occurrence and fitness to persistence: Habitat based approach for endangered Greater Sage Grouse. *Ecological Applications* 17(2)508–526.

Aldridge C.L., S.E. Nielsen, H.L. Beyer, M.S. Boyce, J.W. Connelly, S.T. Knick, and M.A. Schroeder. 2008. Range-wide patterns of greater sage-grouse persistence. *Diversity and Distributions* 17:983–994.

Baines, D., and R.W. Summers. 1997. Assessment of bird collisions with deer fences in Scottish forests. *Journal of Applied Ecology* 34:941–948.

Beck, T.D.I. 1977. Sage grouse flock characteristics and habitat selection during winter. *Journal of Wildlife Management* 41:18–26.

Bevanger, K., and H. Broseth. 2000. Reindeer *Rangifer tarandus* fences as a mortality factor for ptarmigan *Lagopus* spp. *Wildlife Biology* 6:121–127.

Bohne, J., T. Rinkes, and S. Kilpatrick. 2007. *Sage-Grouse Habitat Management Guidelines for Wyoming*. Wyoming Game and Fish Publication. July 24.

Braun, C.E. 1998. Sage-grouse declines in western North America: what are the problems. Proceedings of the Western Association of State Fish and Wildlife Agencies 78:139–156.

———. 2006. A Blueprint for Sage-Grouse Conservation and Recovery. Tucson: Grouse Inc.

Bureau of Land Management (BLM), U.S. Fish and Wildlife Service, U.S. Forest Service, Oregon Department of Fish and Wildlife, and Oregon Division of State Lands. 2000. *Greater Sage-grouse and Sagebrush-steppe Ecosystem: Management Guidelines*.

Cagney, J., E. Bainter, B. Budd, T. Christiansen, V. Herren, M. Holloran, B. Rashford, M. Smith, and J. Williams. 2009. Grazing influence, management and objective development in Wyoming greater sage-grouse habitat with emphasis on nesting and early brood rearing. Unpublished report. Available online at http://gf.state.wy.us/wildlife/wildlife_management/sagegrouse/index.asp. Accessed December 2009.

Call, M.W., and C. Maser. 1985. *Wildlife Habitats in Managed Rangelands – The Great Basin of Southeastern Oregon: Sage Grouse.* General Technical Report PNW-187. USDA Forest Service, Pacific Northwest Forest and Range Experiment Station.

Carpenter, J., C. Aldridge, and M.S. Boyce. 2010. Sage-grouse habitat selection during winter in Alberta. *Journal of Wildlife Management* 74(8):1806–1814.

Catt, D.C., D. Dugan, R.E. Green, R. Moncrieff, R. Moss, N. Picozzi, R.W. Summers, and G.A. Tyler. 1994. Collisions against fences by woodland grouse in Scotland. *Forestry* 67:105–118.

Chi, R.Y. 2004. Greater sage-grouse reproductive ecology and tebuthiuron manipulation of dense big sagebrush on Parker Mountain. M.S. thesis, Utah State University, Logan.

Christiansen, T. 2009. Fence Marking to Reduce Greater Sage-grouse (*Centrocercus urophasianus*) Collisions and Mortality near Farson, Wyoming – Summary of Interim Results. Wyoming Game and Fish Department. Available online at http://pbadupws.nrc.gov/docs/ML1108/ML110830116.pdf. Accessed January 2012.

Colorado Division of Wildlife, USDA Forest Service, USDA Natural Resource Conservation Service, U.S. Bureau of Land Management, and U.S. Fish and Wildlife Service. 2008. Colorado Greater Sage-Grouse Conservation Plan. January 2008. Available online at http://wildlife.state.co.us/WildlifeSpecies/SpeciesOfConcern/Birds/Pages/GreaterSageGrouseConsPlan2.aspx. Accessed March 2013.

Connelly, J.W., S.T. Knick, M.A. Schroeder, and S.J. Stiver. 2004. Conservation assessment of greater sage-grouse and sagebrush habitats. Unpublished report. Cheyenne, Wyoming: Western Association of Fish and Wildlife Agencies.

DRAFT

Connelly, J.W., E T. Rinkes, and C.E. Braun. 2011. Characteristics of greater sage-grouse habitats: a landscape species at micro- and macroscales. In *Greater Sage-grouse Ecology and Conservation of a Landscape Species and its Habitats*, edited by S.T. Knick and J.W. Connelly, pp. 69–83. Berkeley: University of California Press.

Connelly, J.W., M.A. Schroeder, A.R. Sands, and C.E. Braun. 2000. Guidelines to manage sage grouse populations and their habitats. *Wildlife Society Bulletin* 28:967–985.

Craighead Beringia South. 2008. Monitoring Sage Grouse with GPS Transmitters, Implications for Home Range and Small Scale Analysis: A Preliminary Look. Jonah Interagency Mitigation and Reclamation Office. 2008 Wildlife Workshop.

Crawford, J.A., R.A. Olson, N.E. West, J.C. Mosely, M.A. Schroeder, T.D. Whitson, R.F. Miller, M.A. Gregg, and C.S. Boyd. 2004. Synthesis paper: ecology and management of sage-grouse and sage-grouse habitat. *Journal of Range Management* 57:2–19.

Crocker, M.J. 2007. *Handbook of Noise and Vibration Control*. Hoboken, New Jersey: John Wiley and Sons, Inc.

Crompton, B., and D. Mitchell. 2005. The sage-grouse of Emma Park—survival, production, and habitat use in relation to coalbed methane development. Utah Division of Wildlife Resources. December 2005.

Danvir, R.E. 2002. Sage grouse ecology and management in northern Utah sagebrush-steppe. Woodruff, Utah: Deseret Land and Livestock Ranch and the Foundation for Quality Resource Management.

Doherty, K.E., D.E. Naugle, B.L. Walker. 2010. Greater sage-grouse nesting habitat: the importance of managing at multiple scales. *Journal of Wildlife Management* 74(7):1544–1553.

Doherty, K.E., D.E. Naugle, B.L. Walker, and J.M. Graham. 2008. Greater sage-grouse winter habitat selection and energy development. *Journal of Wildlife Management* 72(1):187–195

Dzialak, M.R., C.V. Olsen, S.M. Harju, S.S. Webb, J.P. Mudd, J.B. Winstead, and L.D. Hayden-Wing. 2011. Indentifying and prioritizing greater sage-grouse nesting and brood-rearing habitat for conservation in human-modified landscapes. PLoS ONE 6(10): e26273. doi:10.1371/journal.pone.0026273.

Eng, R.L., and P. Schladweiler. 1972. Sage grouse winter movements and habitat use in central Montana. *Journal of Wildlife Management* 36:141–146.

Gregg, M.A., J.A. Crawford, M.S. Drut, and A.K. DeLong. 1994. Vegetative cover and predation of sage-grouse nests in Oregon. *Journal of Wildlife Management* 58:162–166.

Holloran, M.T., and S.H. Anderson. 2005. Spatial distribution of greater sage-grouse nests in relatively contiguous sagebrush habitats. *The Condor* 107:742–752.

Johnson, D.H., M.J. Holloran, J.W. Connely, S.E. Hanser, C.L. Amundson, and S.T. Knick. 2011. Influences of environmental and anthropogenic features on greater sage-grouse populations, 1997–2007. In *Greater Sage-grouse Ecology and Conservation of a Landscape Species and its Habitats*, edited by S.T. Knick and J.W. Connelly, pp. 407–450. Berkeley: University of California Press.

DRAFT

LaGory, K.E., Y. Hamada, P.F. Tarpey, E.B. Levine, C.C. Weber, L.J. Walston, and D.J. LePoire. 2012. *A Spatially Explicit Individual-Based Modeling Approach to Evaluate the Cumulative Effects of Wind Energy Development on the Greater Sage-grouse*. Prepared by Argonne National Laboratory, Argonne, IL, for the U.S. Department of Energy, Washington, D.C. September 2012. 56 pp.

Lincoln County Sage Grouse Technical Review Team. 2004. *Lincoln County Sage Grouse Conservation Plan*. Nevada. Available online at http://www.ndow.org/wild/conservation/sg/plan/SGPlan063004_R.pdf. Accessed January 2012.

Nisbet, R.A., S.H. Berwick, and K.L. Reed. 1983. A spatial model of sage grouse habitat quality. *Developments in Environmental Modeling* 5:267–276.

Perkins, C.J. 2010. Ecology of isolated greater sage-grouse populations inhabiting the Wildcat Knolls and Horn Mountain, Southcentral Utah. M.S. thesis, Utah State University, Logan.

Petty, S.J. 1995. Assessment of fence collisions by grouse species in Scotland. Forestry Commission Research Information Note 264.

Pruett, C.L., M.A. Patten, and D.H. Wolfe. 2009. Avoidance behavior by prairie grouse: implications for development of wind energy. *Conservation Biology* 23:5:1253–1259.

Robinson, J.D. 2007. Ecology of two geographically distinct greater sage-grouse populations inhabiting Utah's West Desert. M.S. thesis, Utah State University, Logan.

Rogers, G.E. 1964. *Sage Grouse Investigations in Colorado*. Technical Bulletin No. 16. Denver: Colorado Game, Fish and Parks Department.

Stevens, B. 2011. Impacts of fences on greater sage-grouse in Idaho: collision, mitigation, and spatial ecology. M.S. thesis, University of Idaho, Moscow.

Stevens, B.S., J.W. Connelly, and K.P. Reese. 2012a. Multi-scale assessment of greater sage-grouse fence collision as a function of site and broad scale factors. *Journal of Wildlife Management* 76(7):1370–1380.

Stevens, B.S., K.P. Reese, J.W. Connelly, and D.D. Musil. 2102b. Greater sage-grouse and fences: does marking reduce collisions? Wildlife Society Bulletin 36:297-303.

Stevens, B.S., D.E. Naugle, B. Dennis, J.W. Connelly, T. Griffiths, and K.P. Reese. 2013. Mapping sage-grouse fence-collision risk: Spatially-explicit models to target conservation implementation. *Wildlife Society Bulletin* 37(2):409-415.

Stiver, S.J., E.T. Rinkes, and D.E. Naugle. 2010. Sage-grouse habitat assessment framework. Unpublished report. Boise, Idaho: Bureau of Land Management, Idaho State Office.

Wallestad, R.O., and D.B. Pyrah. 1974. Movement and nesting of sage grouse hens in central Montana. *Journal of Wildlife Management* 38:630–633.

Walker, B.L., D.E. Naugle, and K.E. Doherty. 2007. Greater sage-grouse population response to energy development and habitat loss. *Journal of Wildlife Management* 71:2644–2654.

DRAFT

Wiebe, K.L., and K. Martin. 1998. Costs and benefits of nestcover for ptarmigan: changes within and between years. *Animal Behaviour* 56:1137–1144.

Wisdom M.J., C.W. Meinke, S.T. Knick, and M.A. Schroeder. 2011. Factors associated with extirpation of sage-grouse. In *Greater Sage-grouse Ecology and Conservation of a Landscape Species and its Habitats*, edited by S.T. Knick and J.W. Connelly, pp. 451–474. Berkeley: University of California Press.

Wolfe, D.H., M.A. Patten, E. Shochat, C.L. Pruett, and S.K. Sherrod. 2007. Causes and patterns of mortality in lesser prairie-chickens (*Tympanuchus pallidicinctus*) and implications for management. *Wildlife Biology* 13 (Suppl. 1):95–104.

DRAFT

APPENDIX B

Quantification of Baseline Habitat Service Level

Text is excerpt from the TWE Project HEA Plan.

DRAFT

QUANTIFICATION OF BASELINE HABITAT SERVICE LEVEL

The pre-construction baseline of the habitat services will be based on existing datasets to the extent possible. It is not anticipated that additional data collection will be necessary to complete the HEA. The baseline service level will be determined by applying the habitat service metrics described in Appendix A to the Assessment Area that is identified for the TWE Project. The Assessment Area will include the footprint of the project and a buffer around the footprint, because greater sage-grouse (*Centrocercus urophasianus*) habitat service losses are expected to extend beyond the area of direct disturbance. For the TWE Project, this buffer will be clipped to the Bureau of Land Management's (BLM) Priority General Habitat (PGH) boundaries.

ESRI ArcGIS ArcInfo 10.X, Spatial Analyst, and ModelBuilder software and tools will be used to conduct analyses. To facilitate calculations across the entire assessment area, it is anticipated that all data will be converted to a raster/grid format. Raster or grid algebra processing is significantly faster for an analysis of this size.

PREPARATION OF GIS MODEL INPUT LAYERS

Habitats within and surrounding the corridor for the preferred alternative will be summarized in a series of representative raster layers for the eight additive metric variables (see Appendix A). These eight variables consist of data representations within the TWE Project Area for human disturbance, landscape characteristics, proximity to greater sage-grouse lek locations, and vegetation characteristics that may influence the use of habitat by greater sage-grouse. A spatial resolution of 30-meters is anticipated to be sufficient to capture a 'landscape level' perspective of habitat across the Assessment Area.

Representative raster data will be created for each additive variable in the HEA metric (Appendix A). Scores for each cell in each raster will be assigned per the variable scores listed in Table A1 of Appendix A. In addition, a raster layer will be developed that locates fences and their relative collision risk during the lekking season. The following sections describe the datasets anticipated to be necessary to describe each of these variables:

Lands Assigned No Habitat Value

As described in Appendix A, land cover types and terrain features that do not provide suitable habitat for greater sage-grouse will be removed from the HEA model. All vegetation types and landforms that potentially provide habitat for greater sage-grouse will remain in the model.

Distance to Roads (VAR01 and VAR02)

Road layers used in developing the baseline HEA model are available from the BLM, Forest Service, state agencies, or from readily available standard road and infrastructure layers (e.g., TIGER data from the U.S. Census Bureau). Road layers will be compared between states to ensure consistency in classification

prior to using them in the HEA model development. HEA model scores will be applied to 30-meter raster cells according to the process described in Table A1, Appendix A. For example, all cells that are more than 1,000 meters from interstate highways or high traffic volume state and federal highways (>6,000 AADT) will be given a score of 3, those between 650 and 1,000 meters will be given a score of 2, those between 100 and 650 meters will be given a score of 1, and those cells within 100 meters will be assigned a value of 0 habitat services (no habitat value) in the model per the description provided Appendix A (Metric of Greater Sage-grouse Habitat Services).

Percent Slope (VAR03)

Slope will be calculated using 30-meter digital elevation models and scored according to the process described in Appendix A.

Distance to Lek (10-year Average Count >0 Males) (VAR04)

Lek data will be obtained from the wildlife management agencies in each state. Lek status will be determined for all leks. Leks that have been active in the past 10 years or that have an unknown status will be included in the HEA model. Those that are labeled as unoccupied or inactive will not be included. Cells surrounding leks will be scored according to the methods described in Appendix A with cells closest to leks receiving the highest scores.

Sagebrush Abundance Index (VAR05)

A sagebrush abundance index will be determined from available vegetation layers by calculating the proportion of sagebrush in a 1-km^2 area surrounding each 30-meter cell in the assessment area. Scores will be applied using the methods described in Appendix A. Areas with a high proportion of sagebrush in the landscape and some habitat heterogeneity will be score higher than areas with little habitat heterogeneity or areas with little or no sagebrush.

Sagebrush Cover, Sagebrush Canopy Height (VAR06 and VAR07)

When possible, percent cover and height will be determined directly from the vegetation attribute data included in the GAP and Landfire vegetation datasets. Where data are not available, attributes for percent cover and height will be determined using other data sources. Sampling data from GAP/Landfire datasets as well as datasets obtained from BLM and the state agencies will be used to attribute vegetation percent cover and height for segments of the landscape with the most similar characteristics. Once vegetation values have been applied to the 30-meter grid, HEA scores will be applied using the methods described in Appendix A.

Distance to Vegetation Dominated by Sagebrush or Shrub (VAR08)

The distance from each cell to the nearest sagebrush or shrub dominated cell will be calculated. Cells within or closest to sagebrush or shrub landscapes will be scored higher than those that are distant from shrub-dominated cells.

Fences that Pose a High Risk for Collision (Adjustment Factor)

A raster file will be produced by running the Stevens et al. 2013 model as described in Appendix A to estimate the greater sage-grouse collision risk during the lekking season within 3 km of leks. The Stevens et al. 2013 model does not consider actual fence locations, so a separate fence location dataset will be intersected with the results of the model to identify actual locations of high collision risk.

Fence locations will be used if the data are available for the entire assessment area. In the event that fence data are not available, grazing allotment boundaries will be used as surrogates for fence layers in the HEA baseline model development.

After the model results and fence layer are intersected, cells in the resulting raster file will be assigned to different score adjustment factors as described in Appendix A. Every cell with a fence running through it that is located within 3 km of a lek will have an estimated number of collisions per lekking seasons. If the estimate is between 0 and 0.39, the adjustment factor will be 0.75. If the estimate is between 0.40 and 0.99, the adjustment factor will be 0.50. If the estimate is 1.0 or above, the adjustment factor will be 0 (i.e., cells containing the highest risk fences have no habitat value).

SUMMATION OF BASELINE SERVICES IN THE HEA MODEL

Spatial grids representing the above HEA variables will be combined through additive and multiplicative raster calculations to create a final raster layer. A simple additive overlay process will be used to calculate the HEA metric value for each cell. The value of each cell will be the sum of VAR01 through VAR08. The resulting value will be multiplied by 0 or 1 to remove all vegetation types that do not provide habitat for greater sage-grouse (e.g., urban areas, roadways, forests) and to retain those habitats that do provide value for greater sage-grouse. This value will be multiplied by the Fence Collision Adjustment Factor if it is located within 3 km of a lek. The final numeric value for each cell is the habitat services provided to greater sage-grouse by that cell.

The resulting habitat service values and the number of acres associated with each of the habitat service values will be multiplied together and summed across the assessment area to calculate the total habitat services (expressed in service acres) (Equation 1). The total habitat services provided by the Assessment Area will be calculated and will serve as the pre-construction baseline for the TWE Project.

Equation 1.

$$VJ = \sum_{1}^{i} (V_i * J_{V_i})$$

where:

VJ is the habitat services (service-acres) provided by the Assessment Area,

V is the habitat service score (i.e., the sum of the variable scores in the habitat service metric),

i is the number of possible unique values for *V*, and

J_{V_i} is the number of acres for each value of V_i , where $\sum_1^i J_{V_i}$ would equal the total acreage of the Assessment Area (*J*).

LITERATURE CITED

Stevens, B.S., D.E. Naugle, B. Dennis, J.W. Connelly, T. Griffiths, and K.P. Reese. 2013. Mapping sage-grouse fence-collision risk: Spatially-explicit models to target conservation implementation. *Wildlife Society Bulletin* 37(2):409-415.

APPENDIX C

Quantification of Habitat Service Losses

Text is excerpt from the TWE Project HEA Plan.

QUANTIFICATION OF HABITAT SERVICE LOSSES

Habitat service losses caused by the TWE Project will be modeled using geographic information system (GIS) technology for important TWE Project milestones by decreasing the variable scores for the habitat services metric below the Baseline level in the footprint of the TWE Project (direct disturbances) and in buffers around the footprint (indirect disturbances). The habitat service scores for each milestone will be summed across the Assessment Area to calculate the estimated interim and permanent habitat service losses associated with the TWE Project.

DESCRIPTION OF DISTURBANCES BY TWE PROJECT MILESTONE

The habitat services provided by the Assessment Area will be measured at several different TWE Project milestones that reflected varying levels of disturbance.

The TWE Project milestones modeled for the HEA will be:

1. **Baseline**—the baseline milestone quantifies habitat services available to greater sage-grouse before disturbance. The calculation of the habitat services available to greater sage-grouse at Baseline is described in Appendix B.
2. **Construction—**the transmission line construction milestone quantifies habitat services available to greater sage-grouse during the construction of the TWE Project.
3. **Restoration**—the restoration milestone quantifies habitat services available to greater sage-grouse after TWE Project construction is complete and some services return with the reduction in noise and human presence.
4. **Recovery**—the recovery milestone quantifies habitat services available to greater sage-grouse after a vegetation type has recovered to the greatest extent expected after TWE Project restoration is complete. Habitat services return to baseline conditions in restored areas with the time to recovery being dependent on the vegetation type. It is anticipated that there will be multiple vegetation-based recovery endpoints. Vegetation recovery endpoints will be determined upon identification of the vegetation communities impacted by the TWE Project.

QUANTIFYING LOSS OF HABITAT SERVICES DUE TO SURFACE DISTURBANCE DURING CONSTRUCTION

For the Construction milestone, direct disturbances will be defined as the loss of habitat services associated with vegetation removal and ground disturbing activities within the construction footprint (Table C1). The habitat service scores for all 30-m^2 raster cells in the TWE Project footprint where vegetation removal or ground disturbance occur will be changed from the Baseline service scores to 0 in the GIS model for this milestone. Recovery from the disturbed state will be applied per the vegetation-specific recovery curves for the TWE Project.

Table C1. Direct Disturbance Levels Modeled by TWE Project Milestone and Disturbance Type

Project Milestones	Percent Baseline Services Present by Direct Disturbance Type		
	AC/DC Converter Station	**Transmission Towers**	**Access Roads, Transmission Lines, and Temporary Infrastructure**
Baseline	100%	100%	100%
Construction	0%	0%	0%
Restoration	0%	0%	0%
Progressive Vegetation Recovery	0%	0% within permanent tower footprint (500 ft^2 for a guide lattice tower, which is 5.2% of a 30-m cell) Elsewhere baseline services will be retuned per the vegetation-specific recovery curves developed for the Project.	Baseline services will be retuned per the vegetation-specific recovery curves developed for the Project.

QUANTIFYING LOSS OF HABITAT SERVICES DUE TO INDIRECT DISTURBANCES DURING CONSTRUCTION

Indirect disturbances will be simulated by applying buffers to the construction footprint and decreasing the habitat service scores below the Baseline habitat service scores within the buffers. Because of uncertainties in the indirect impacts of transmission on greater sage-grouse, at this time, noise and human presence will be the only indirect disturbance modeled in the HEA.

Use of construction equipment such as backhoes, cranes, front-end loaders, bulldozers, graders, excavators, compressors, generators, and various trucks would be needed for mobilizing crew, transportation and use of materials, line work, site clearing, and preparation during the construction phase of the TWE Project. Construction of and improvements to access roads would require use of earthmoving equipment such as bulldozers and graders. Table C2 provides the typical noise levels for the construction equipment that could potentially be used during the construction phase of the TWE Project (ranging 80 to 90 A-weighted decibels [dBA] at 50 feet [15 meters (m)] from any work site).[2]

Table C2. Typical Noise Levels from Construction Equipment

Equipment Type	Noise Level at 50 feet (dBA)
Crane	88
Backhoe	85
Pan loader	87
Bulldozer	89

[2] Construction noise values taken from Energy Gateway West HEA report.

Fuel truck	88
Water truck	88
Grader	85
Roller	80
Mechanic truck	88
Flatbed truck	88
Dump truck	88
Tractor	80
Concrete truck	86
Concrete pump	82
Front end loader	83
Scraper	87
Air compressor	82
Average construction site	85

Noise during the construction phase of the TWE Project would be similar in magnitude to noise produced by vehicles using secondary roads (county highways, state highways, and heavily travelled gravel roads [e.g., access roads for oil and gas development, mining, etc.]). Passenger vehicles, medium trucks, and heavy trucks going 55 miles per hour (mph) produce typical noise levels of 72 to 74 dBA, 80 to 82 dBA, and 84 to 86 dBA, respectively, from a distance of 50 feet. Therefore, the noise disturbance associated with construction will be modeled as if the construction area was a secondary road (Table C3).

In the model, buffers will be placed around active construction areas in a manner that is identical to the methods used for secondary roads. The cells that fall within these buffers will be scored in a manner identical to a secondary road (i.e., the score for VAR02 decreased).

Table C3. Indirect Disturbance Levels Modeled by TWE Project Year and Disturbance Type

Project Milestones	Indirect Disturbance Buffers Applied by Disturbance Type		
	AC/DC Converter Station	**Transmission Towers**	**Access Roads, Transmission Lines, and Temporary Infrastructure**
Baseline	None	None	None
Construction	Secondary Road	Secondary Road	Secondary Road
Restoration	Secondary Road	None	None
Progressive Vegetation Recovery	Secondary Road	None	None
	Secondary Road	None	None
	Secondary Road	None	None
	Secondary Road	None	None

QUANTIFYING HABITAT SERVICES LOSSES DURING RESTORATION AND RECOVERY

TWE Project-related habitat service losses are anticipated to decrease once construction is complete. Although still below baseline levels, the habitat service scores rise during restoration and recovery with vegetation regrowth (direct disturbances) and decreased levels of noise and human presence (indirect disturbances).

Restoration Milestone

For the Restoration milestone, direct disturbances will be defined as the loss of all habitat services in the construction footprint where vegetation clearing and ground disturbance occurs because the vegetation has not regrown sufficiently to provide habitat (see Table C1).

The indirect disturbance buffers that are applied to the power conversion terminal during construction will remain during the restoration milestone and for the life of the TWE Project because of the noise human activity associated with operation of the facility. No indirect disturbances will be modeled for the rest of the TWE Project because little vehicle traffic or human presence is anticipated in these areas after construction of the line is complete.

Progressive Recovery Milestone

For the Recovery milestone, direct disturbances will be defined as the loss of all habitat services in the footprint of the transmission structure pads and the partial loss of services in areas of vegetation regrowth (see Table C1). Indirect disturbances will be applied in a manner identical to the Construction milestone (see Table C3).

Habitat services in areas where the vegetation is reclaimed (i.e., outside the footprint of permanent facilities) will gradually return to baseline conditions at a rate dependent on the vegetation type. Services will return more rapidly for vegetation having rapid recovery rates (e.g., agriculture, wetland, grassland, or riparian) than for those with slower recovery times (e.g., shrub-dominated including sagebrush). Vegetation recovery curves will be developed for the vegetation communities that are impacted by TWE Project activities.

To calculate the progressive return of services, the percentage of the baseline service value for a cell will be calculated based on the appropriate vegetation recovery curve. For example, in those vegetation types with rapid restoration potential (agricultural areas, some grasslands, etc.), habitat services could be returned to 100% of Baseline in the first year following construction. Those with longer recovery times may only achieve partial service returns per year until achieving their maximum value. For example, a vegetation community with a 50 year recovery period might achieve 10% value in year 5 after restoration, 20% in year 10, 30% in year 15, etc. until all services are returned in year 50.

HEA TO QUANTIFY INTERIM AND PERMANENT HABITAT INJURIES

The approach described above will produce a measure of habitat services (in service-acres) for each of the TWE Project milestones for each of the modeled project segments. The HEA is a stepwise model which quantifies the habitat injury separately in each year (Figure C1) and each of the milestones will be assigned to a calendar year per the schedule provided by TransWest after the preferred alternative is identified. It is likely that a linear change in habitat services will be used to estimate annual service-acre increases between restoration and recovery and between the vegetation-specific recovery times. The total number of service-acres lost per year will be summed across the analysis period and expressed as service-acre-years. This value is the estimated sum of the interim and permanent losses to greater sage-grouse habitat that would occur as a result of the TWE project construction, operation, and maintenance.

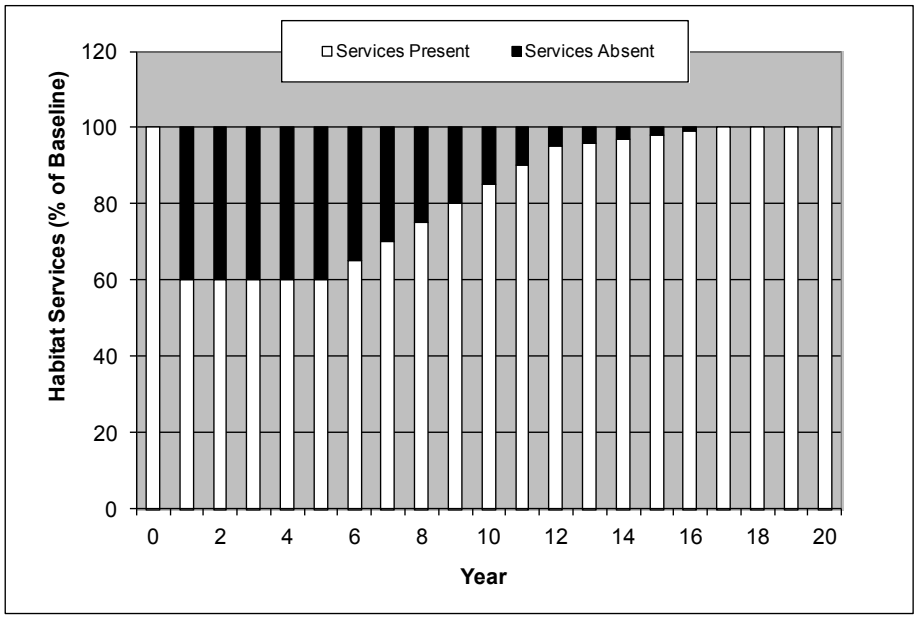

Figure C1. Hypothetical example of how the HEA model considers habitat services absent and habitat services present in each year to calculate the total services lost over the Project period (i.e., sum of the black bars).

The HEA model balances the cumulative injury (*I*, service-acre-years) over the lifetime of the TWE Project with the cumulative benefit of habitat restoration and mitigation (*R*, service-acre-years), so that the services returned by habitat restoration and mitigation are greater than or equal to the cumulative injury ($R \geq I$). The habitat injury (*I*, service-acre-years) will be quantified for the life of the TWE Project using Equation 2. Equation 2 was adapted from Equation 8.1 in Allen et al. (2005). The discount rate (*r*) is anticipated to be set to 3%, which is standard for this type of analysis. The discount rate converts services being provided in different time periods into current time period equivalents (Allen et al. 2005). The discount rate effectively weighs the habitat service losses so that losses occurring early in the TWE Project result in a greater overall injury than losses occurring later

in the project. Likewise, habitat restoration and mitigation occurring early in the TWE Project would result in a greater benefit than habitat restoration and mitigation occurring late in the project.

Equation 2. $$I = \sum_{t=0}^{y} JV^{j} * \rho_{t} * \left[(b^{j} - x_{t}^{j}) / b^{j} \right]$$

where:

I is the present value of the service-acre-years lost over *y* due to interim and permanent injury,

t = 0 is the year the TWE Project begins,

y is the analysis period, in years (e.g., 107),

JV^j is the value of the habitat services provided by the injured habitat (service-acres) before injury (i.e., at the Baseline milestone),

b^j is the mean service score provided by the Assessment Area (JV^j/J, where J is the injury Assessment Area in acres) at the Baseline milestone (time [*t*] = 0),

ρ_t is the discount factor, where $\rho_t = 1/(1+r)^{t-C}$, where *r* is the discount rate for the time period and *C* is the time the claim is presented (*C* = Project Year 1), and

x_t^j is the mean service score provided by the Assessment Area at the end of year *t* if TWE Project disturbances are applied.

LITERATURE CITED

Allen, P.D. II, D.J. Chapman, and D. Lane. 2005. Scaling environmental restoration to offset injury using habitat equivalency analysis. In *Economics and Ecological Risk Assessment: Applications to Watershed Management*, edited by R.F. Bruins and M.T. Heberling, pp. 165–184. Boca Raton, Florida: CRC Press.

Baker, W.L. 2006. Fire and restoration of sagebrush ecosystems. *Wildlife Society Bulletin* 34:177–185.

Bunting S.C. 2002. Natural and prescribed fires in big sagebrush steppe – response of individual species and implications to burning practices. Restoration and Management of Sagebrush/Grass Communities. Elko, Nevada.

Bureau of Land Management (BLM). 2011. *Draft Environmental Impact Statement for the Gateway West Transmission Line Project, Wyoming, Idaho, and Nevada*. Cheyenne, Wyoming: U.S. Department of the Interior, Bureau of Land Management, Wyoming State Office. July 2011.

Cooper, S.V., P. Lesica, and G.M. Kudray. 2007. *Post-Fire Recovery of Wyoming Big Sagebrush Shrub-Steppe in Central and Southeast Montana*. Prepared for U.S. Department of the Interior Bureau of Land Management. Helena, Montana: Montana Natural Heritage Program.

U.S. Geological Survey. 2007. The National Map LANDFIRE: LANDFIRE National Fire Regime Condition Class layer. Last updated 2007. U.S. Department of the Interior, Geological Survey. Available at http://gisdata.usgs.net/website/landfire/. Accessed August 2009.

Wambolt, C.L., K.S. Walhof, and M.R. Frisina. 2001. Recovery of big sagebrush communities after burning in south-western Montana. *Journal of Environmental Management* 61:243–252.

APPENDIX D

Quantification of Habitat Service Gains Produced by Habitat Restoration and Mitigation Measures

Text is excerpt from the TWE Project HEA Plan.

MODELING MITIGATION PROJECT HABITAT SERVICE GAINS

Habitat restoration and conservation measures are intended to create new, or protect existing, greater greater sage-grouse habitat services (Table D1). These measures serve as a "toolbox" from which mitigation projects may be selected by TransWest for inclusion in a mitigation package once the BLM has identified the preferred alternative and final HEA results are available for that alternative. The purpose of the mitigation projects is to offset the cumulative greater sage-grouse habitat service losses in the Assessment Area over the TWE Project lifetime (i.e., *I* in Equation 2 from Appendix C). The HEA will used to evaluate the benefit of a sample of conservation measures in the Assessment Area.

Table D1. Potential Habitat Restoration and Conservation Measures for Inclusion in the HEA.

Measure	Brief Conservation Measure Description	Anticipated Benefits
Fence removal and marking with flight diverters	Fences would be removed or marked in: 1) Sections of fence known to cause greater sage-grouse collisions, 2) Fences within 2 km (1.2 mi) of leks (Braun 2006; Stevens 2011) or other high risk area, 3) Fences in areas with low slope and terrain ruggedness (Stevens 2011), and 4) Fence segments bounded by steel t-posts with spans greater than 4 m (Stevens 2011).	• Reduce mortality due to greater sage-grouse collisions • Increase visibility of fences • Increase contiguous patches of shrub-steppe habitat • Remove localized grazing pressure and increase habitat
Sagebrush restoration and improvement projects	Seeding, planting seedlings, or transplanting containerized sagebrush plants (one plant per 5 m^2) and seeding a bunchgrass understory.	• Create contiguous patches of shrub-steppe habitat with optimal sagebrush cover and height and a bunchgrass understory • Increase availability of high quality nesting, brood rearing, and winter habitats
Juniper/conifer removal	Mechanical removal (lop and scatter, cut-pile-cover, or mastication) of juniper/confer adjacent to areas with optimal sagebrush cover and height	• Reverse juniper/conifer encroachment on shrub-steppe habitat to increase contiguous patches of greater sage-grouse habitat • Increase light penetration to support a forb and grass understory
Conservation easements	Removes threat of specific land uses to sensitive wildlife populations	• Prevent greater sage-grouse habitat destruction or degradation near urban areas and oil and gas development • Reduce future fragmentation of shrub-steppe habitat

GIS MODELING OF CONSERVATION BENEFITS

The analysis of habitat service benefits produced by each habitat restoration or mitigation measure in Table D1 will be completed using an approach similar to that described or quantifying habitat losses. It is necessary that both analyses (i.e., quantification of habitat service losses and habitat service gains) use the same habitat services metric (see Appendix A), the same unit of measure (service-acres and service-acre-years), the same analysis period, and the same discount rate. Figure D1 illustrates a hypothetical example of how mitigation would be added to the baseline service metric over time to derive an estimate of the service-acre-years provided by the mitigation measures that will be modeled for the TWE Project.

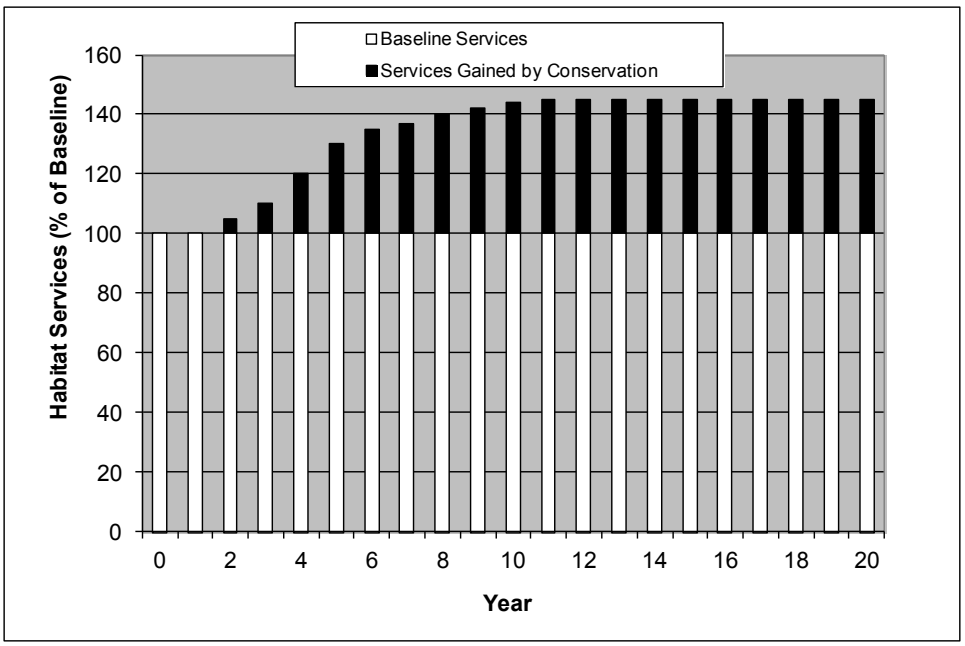

Figure D1. Hypothetical example of how the HEA model considers habitat services gained by habitat restoration and mitigation to calculate the total services gained over the project period (i.e., sum of the black bars).

Modeling Habitat Restoration and Mitigation Measures

Ideally, locations of possible habitat restoration and mitigation projects will be identified prior to finalization of the HEA process. In the event that these locations are not known, hypothetical habitat restoration and mitigation project areas will be used to estimate average habitat service gain.

Once actual or hypothetical habitat restoration and mitigation project locations are identified, variable scores in the HEA model will be changed to approximate the change in habitat services expected with implementation of the measure. The new habitat service score will be calculated for each cell in the Assessment Area using the same habitat services metric used to quantify baseline and impacts (see Appendix A). The habitat service benefit of a modeled mitigation project will be calculated by determining the difference in the habitat services provided at baseline and after implementation of the habitat restoration or mitigation measure.

For each habitat restoration/mitigation project, the time to full benefit and project initiation timing will be determined and accounted for in the HEA model to estimate of the present value habitat service gain that would be created. The present value habitat service gain (*R*, service-acre-years) will be quantified for the life of the TWE Project using Equation 3 (adapted from Equation 8.1 in Allen et al. 2005).

Equation 3.
$$R = \sum_{t=0}^{y} PV^{p} * \rho_{t} * \left[(x_{t}^{p} - b^{p}) / b^{p} \right]$$

where:

R is the present value of the service-acre-years gained by the habitat restoration or mitigation measure,

t = 0 is the year the transmission line TWE Project begins,

y is the analysis period, in years (i.e., 107),

PV^p is the value of the habitat services provided by the improved habitat (service-acres) before habitat restoration or mitigation measure (i.e., at the Baseline milestone),

b^p is the mean service score provided by the Assessment Area (PV^p/P, where *P* is the injury Assessment Area in acres) at the Baseline milestone (time [*t*] = 0),

ρ_t is the discount factor, where $\rho_t = 1/(1+r)^{t-C}$, where *r* is the discount rate for the time period and *C* is the time the claim is presented (C = Project Year 1), and

x_t^p is the mean service score provided by the Assessment Area at the end of year *t* if habitat restoration or mitigation measure benefits are applied.

The present value habitat service gain (*R*) will be standardized among mitigation project types by dividing by size of mitigation project (units in acres or linear mile depending on the conservation measure modeled) and averaged among hypothetical projects applying the same conservation measure to produce the service-years gained per unit of treatment ($\overline{R}^m$). This value will be used in mitigation calculations.

ESTIMATING COST TO IMPLEMENT MODELED HABITAT RESTORATION AND MITIGATION MEASURES

The cost of the modeled habitat conservation measures will be estimated by averaging the known cost of similar mitigation projects previously implemented (in current year U.S. dollars). The cost per unit treated will be divided by the average service-acre-years per unit area treated (calculated in the previous section), to estimate the price per service-acre-year gained for each of the habitat restoration and mitigation measures. This is the currency that will be used to offset the permanent and interim habitat service losses associated with the TWE Project's construction, operation, and maintenance for the lifetime of the TWE Project.

APPROACH TO OFFSET HABITAT SERVICE LOSSES WITH HABITAT SERVICE GAINS

An HEA scales the mitigation package (i.e., funding to create habitat services) to offset the loss of habitat services over the lifetime of the TWE Project. The injury is offset by planned habitat restoration and mitigation projects in Equation 4, where the mitigation project size (P^m) can be solved for each habitat restoration or mitigation measure type (*m*).

Equation 4

$$I = \sum_{m1}^{i} P^m * \overline{R}^m$$

where:

I is the present value of the service-acre-years lost over y due to interim and permanent injury,

i is the number of habitat restoration and mitigation measures modeled,

Pm is the size of the habitat restoration or mitigation project of type m (in units of acres or miles), and

$\overline{R}^m$ is mean service-years gained per unit (acres or miles) of treatment.

Once the P^m is defined for each habitat improvement and mitigation measure, the costs per unit can be applied. Mitigation due is the sum of the costs to implement each of the habitat improvement and mitigation projects needed to offset the TWE Project

APPENDIX E

Assignment of National Gap Analysis Program (GAP) Vegetation Classifications to Categories for HEA Modeling

VEGETATION CATEGORIZATION FOR HEA MODELING

Vegetation and other landcover types in the USGS GAP Land Cover Dataset were classified as providing habitat for greater sage-grouse or not providing habitat for greater sage-grouse. Vegetation types providing no habitat services to greater sage-grouse (Non-Habitat in Table E1) were assumed to require no mitigation in the HEA. Those vegetation types that are used by greater sage-grouse (Habitat in Table E1) were assigned to one of four modeled vegetation categories. Each of the modeled vegetation categories had a different vegetation recovery time in the HEA model.

Table E1. Vegetation categorization based on GAP landcover types

Vegetation Categories	GAP Vegetation: ECOLSYS_LU
Non-Habitat: Anthropogenic Disturbance and Open Water	Developed, High Intensity
	Developed, Low Intensity
	Developed, Medium Intensity
	Developed, Open Space
	Disturbed/Successional - Recently Chained Pinyon-Juniper
	Open Water (Fresh)
	Quarries, Mines, Gravel Pits and Oil Wells
Non-Habitat: Natural Vegetation	Colorado Plateau Mixed Bedrock Canyon and Tableland
	Colorado Plateau Pinyon-Juniper Shrubland
	Colorado Plateau Pinyon-Juniper Woodland
	Great Basin Pinyon-Juniper Woodland
	Inter-Mountain Basins Aspen-Mixed Conifer Forest and Woodland
	Inter-Mountain Basins Cliff and Canyon
	Inter-Mountain Basins Juniper Savanna
	Inter-Mountain Basins Shale Badland
	Introduced Riparian and Wetland Vegetation
	Introduced Upland Vegetation - Annual Grassland
	Introduced Upland Vegetation - Perennial Grassland and Forbland
	Introduced Upland Vegetation - Treed
	North American Warm Desert Bedrock Cliff and Outcrop
	North American Warm Desert Lower Montane Riparian Woodland and Shrubland
	Recently Burned
	Rocky Mountain Alpine Bedrock and Scree
	Rocky Mountain Aspen Forest and Woodland
	Rocky Mountain Bigtooth Maple Ravine Woodland
	Rocky Mountain Cliff, Canyon and Massive Bedrock
	Rocky Mountain Foothill Limber Pine-Juniper Woodland
	Rocky Mountain Gambel Oak-Mixed Montane Shrubland

	Rocky Mountain Lodgepole Pine Forest
	Rocky Mountain Lower Montane Riparian Woodland and Shrubland
	Rocky Mountain Subalpine Dry-Mesic Spruce-Fir Forest and Woodland
	Rocky Mountain Subalpine Mesic Spruce-Fir Forest and Woodland
	Rocky Mountain Subalpine-Montane Limber-Bristlecone Pine Woodland
	Southern Rocky Mountain Dry-Mesic Montane Mixed Conifer Forest and Woodland
	Southern Rocky Mountain Mesic Montane Mixed Conifer Forest and Woodland
	Western Great Plains Cliff and Outcrop
Habitat: Agriculture and Wetland (HEA assumed 1 year recovery time)	Cultivated Cropland
	Inter-Mountain Basins Playa
	North American Arid West Emergent Marsh
	North American Warm Desert Playa
	Pasture/Hay
	Rocky Mountain Alpine-Montane Wet Meadow
	Rocky Mountain Subalpine-Montane Mesic Meadow
	Western Great Plains Closed Depression Wetland
	Western Great Plains Open Freshwater Depression Wetland
	Western Great Plains Saline Depression Wetland
Habitat: Grassland and Riparian (HEA assumed 5 years recovery time)	Great Basin Foothill and Lower Montane Riparian Woodland and Shrubland
	Inter-Mountain Basins Semi-Desert Grassland
	North American Warm Desert Riparian Mesquite Bosque
	North American Warm Desert Wash
	Northwestern Great Plains Mixedgrass Prairie
	Rocky Mountain Subalpine-Montane Riparian Shrubland
	Southern Rocky Mountain Montane-Subalpine Grassland
	Western Great Plains Riparian Woodland and Shrubland
Habitat: Sagebrush (HEA assumed 20 years recovery time)	Colorado Plateau Mixed Low Sagebrush Shrubland
	Great Basin Xeric Mixed Sagebrush Shrubland
	Inter-Mountain Basins Big Sagebrush Shrubland
	Inter-Mountain Basins Big Sagebrush Steppe
	Inter-Mountain Basins Montane Sagebrush Steppe
Habitat: Shrub Steppe (HEA assumed 100 years recovery time)	Great Basin Semi-Desert Chaparral
	Inter-Mountain Basins Active and Stabilized Dune
	Inter-Mountain Basins Curl-leaf Mountain Mahogany Woodland and Shrubland
	Inter-Mountain Basins Greasewood Flat

	Inter-Mountain Basins Mat Saltbush Shrubland
	Inter-Mountain Basins Mixed Salt Desert Scrub
	Inter-Mountain Basins Semi-Desert Shrub Steppe
	Mogollon Chaparral
	Mojave Mid-Elevation Mixed Desert Scrub
	Rocky Mountain Lower Montane-Foothill Shrubland
	Sonora-Mojave Creosotebush-White Bursage Desert Scrub
	Sonora-Mojave Mixed Salt Desert Scrub
	Wyoming Basins Dwarf Sagebrush Shrubland and Steppe

APPENDIX L
FRAMEWORK HAZARDOUS MATERIALS MANAGEMENT PLAN

TABLE OF CONTENTS

L1.0 INTRODUCTION 1

L2.0 PLAN PURPOSE 1

L3.0 PLAN UPDATES 1

L4.0 REGULATORY COMPLIANCE 1

L4.1 CERCLA/SUPERFUND AMENDMENTS AND REAUTHORIZATION ACT (40 CFR PARTS 300-399) 1
L4.2 CLEAN AIR ACT (40 CFR PARTS 50-99) 2
L4.3 CLEAN WATER ACT (40 CFR PARTS 100-149) 2
L4.4 HAZARDOUS MATERIALS TRANSPORTATION ACT (49 CFR PARTS 100-199) 2
L4.5 OCCUPATIONAL SAFETY AND HEALTH ADMINISTRATION (OSHA) (29 CFR PARTS 1900-1926) 2
L4.6 SOLID AND HAZARDOUS WASTES (40 CFR PARTS 239-299) 2
L4.7 TOXIC SUBSTANCES CONTROL ACT (TSCA) (40 CFR PARTS 700-799) 3
L4.8 STATE REGULATIONS 3
L4.8.1 State of Wyoming 3
L4.8.2 State of Colorado 3
L4.8.3 State of Utah 4
L4.8.4 State of Nevada 4

L5.0 HAZARDOUS MATERIALS MANAGEMENT PLAN REQUIREMENTS 5

L5.1 CERTIFICATIONS, AMENDMENTS, AND DESIGNATION OF EMERGENCY RESPONSE COORDINATOR 5
L5.1.1 Certifications 5
L5.1.2 Amendments 5
L5.1.3 Emergency Response Coordinator 5
L5.2 FACILITIES DESCRIPTION AND INVENTORY OF MATERIALS 6
L5.2.1 Site Maps 6
L5.2.2 Inventory 6

L6.0 HAZARDOUS MATERIALS MANAGEMENT 7

L6.1 TYPES OF HAZARDOUS MATERIALS 7
L6.2 STORAGE OF HAZARDOUS MATERIALS 7
L6.2.1 Physical Storage Requirements 8
L6.2.2 Container Labeling Requirements 8
L6.3 REFUELING AND SERVICING 9
L6.4 TRANSPORTATION OF HAZARDOUS MATERIALS 9
L6.5 GENERATING HAZARDOUS WASTE 9
L6.5.1 Prior to Construction Activities 9
L6.5.2 During Construction Activities 10
L6.5.3 After Construction Activities 10
L6.6 DISPOSAL OF HAZARDOUS WASTE 10
L6.7 CONTAMINATED CONTAINERS 10
L6.8 WASTE OIL FILTERS 11
L6.9 USED LUBRICATING OIL 11

ATTACHMENTS:

ATTACHMENT A SAMPLE FORMS FOR HAZARDOUS MATERIALS MANAGEMENT PLAN..... 12

ACRONYMS

Applicant	TransWest Express LLC, also TransWest
BMP	Best Management Practice
CAA	Clean Air Act
CCR	Colorado Code of Regulations
CERCLA	Comprehensive Environmental Response, Compensation, and Liability Act of 1980
CFR	Code of Federal Regulations
CIC	Compliance Inspection Contractor
CWA	Clean Water Act
DEIS	Draft Environmental Impact Statement
EIS	Environmental Impact Statement
EMM	Environmental Mitigation Measure
EPA	United States Environmental Protection Agency
HMMP	Hazardous Materials Management Plan, also Plan
ID	identification
MSDSs	Material Safety Data Sheets
NTP	Notice to Proceed
OSHA	Occupational Safety and Health Administration
PCB	polychlorinated biphenyl
Plan	Hazardous Materials Management Plan, also NMMP
POD	Plan of Development
ppm	parts per million
Project	TransWest Express Transmission Project, also TWE Project
RCRA	Resource Conservation and Recovery Act of 1976
ROD	Record of Decision
ROW	right-of-way
SHWD	Solid and Hazardous Waste Division
TransWest	TransWest Express LLC, also Applicant
TSCA	Toxic Substance Control Act
TWE Project	TransWest Express Transmission Project, also Project
USDOT	United States Department of Transportation
WAQSR	Wyoming Air Quality Standards and Regulations
WDEQ	Wyoming Department of Environmental Quality
WEQA	Wyoming Environmental Quality Act
WQS	Wyoming Quality Standards
WWEC	West-wide Energy Corridor

L1.0 INTRODUCTION

This framework Hazardous Material Management Plan (HMMP or Plan) identifies project-specific mitigation measures and other specific stipulations and methods to be taken by TransWest Express LLC (TransWest or Applicant) and its Construction Contractor(s) to address hazardous materials spill prevention, response, and cleanup procedures for the TransWest Express Transmission Project (TWE Project or Project).

The term "hazardous material," as presented in this framework Plan, refers to hazardous substances, hazardous wastes, marine pollutants, elevated temperature materials, and materials designated as hazardous for transportation as defined in 49 Code of Federal Regulations (CFR) 171.8.

The Spill Prevention and Response Plan (Appendix S) identifies specific measures that the Construction Contractor(s) shall take to prevent, respond to, and control a spill, should a spill occur.

L2.0 PLAN PURPOSE

The purpose of this HMMP is to reduce the risks associated with the use, storage, transportation, and disposal of hazardous materials. The Construction Contractor(s) shall use the following framework to develop a detailed HMMP.

The HMMP will clearly identify which legal requirements apply to specific types of hazardous materials and will identify best management practices (BMPs) that will be followed to reduce risks associated with hazardous materials.

The Construction Contractor(s) shall develop and implement the HMMP in accordance with the BMPs, Applicant Committed Environmental Mitigation Measures (EMMs), and applicable state and federal land management agencies' mitigation measures to reduce the risks associated with using, storing, transporting, and disposing of hazardous materials.

L3.0 PLAN UPDATES

This HMPP framework will be updated as required for the Record of Decision (ROD) Plan of Development (POD) and Notice to Proceed (NTP) POD based on preliminary and final design and engineering. The Construction Contractor(s) will be responsible for preparing and implementing the final Plan in compliance with all local, state, and federal regulations pertaining to hazardous materials.

L4.0 REGULATORY COMPLIANCE

For the purpose of the HMMP, the primary laws governing hazardous materials include the Comprehensive Environmental Response, Compensation and Liability Act of 1980 (CERCLA), Resource Conservation and Recovery Act of 1976 (RCRA), Clean Air Act Amendments of 1990 (CAA), and Federal Water Pollution Control Act of 1973 (Clean Water Act [CWA]). Some of these laws' key regulations are listed below. The following list is not comprehensive. Numerous other federal, state, and local regulations also govern the use, storage, transportation, and disposal of hazardous materials.

L4.1 CERCLA/Superfund Amendments and Reauthorization Act (40 CFR Parts 300-399)

- 40 CFR Part 300, National Oil and Hazardous Substances Pollution Contingency Plan

- 40 CFR Part 302, Designation, Reportable Quantities, and Notification
- 40 CFR Part 355, Emergency Planning and Notification
- 40 CFR Part 370, Hazardous Chemical Reporting: Community Right-to-Know
- 40 CFR Part 372, Toxic Chemical Release Reporting: Community Right-to-Know

L4.2 Clean Air Act (40 CFR Parts 50-99)

- 40 CFR Part 50, National Ambient Air Quality Standards
- 40 CFR Parts 61-63, National Emissions Standards for Hazardous Air Pollutants

L4.3 Clean Water Act (40 CFR Parts 100-149)

- 40 CFR Part 110, Discharges of Oil
- 40 CFR Part 112, Oil Pollution Prevention
- 40 CFR Part 116, Designation of Hazardous Substances
- 40 CFR Part 117, Determination of Reportable Quantities for Hazardous Substances
- 40 CFR Part 129, Toxic Pollutant Effluent Standards
- 40 CFR Part 131, Water Quality Standards
- 40 CFR Parts 141-149, Safe Drinking Water Act

L4.4 Hazardous Materials Transportation Act (49 CFR Parts 100-199)

- 49 CFR Part 130, Oil Spill Prevention and Response Plans
- 49 CFR Part 171, General Information, Regulations, and Definitions
- 49 CFR Part 172, Hazardous Materials Table, Special Provisions, Hazardous Materials Communications, Emergency Response Information, and Training Requirements
- 49 CFR Part 177, Carriage by Public Highway

L4.5 Occupational Safety and Health Administration (OSHA) (29 CFR Parts 1900-1926)

- 28 CFR Parts 1900-1910, Occupational Safety and Health Act
- 29 CFR Part 1904, Recording and Reporting Occupational Injuries and Illness
- 29 CFR Part 1910.120, Hazard Communication
- 29 CFR Part 1926, Safety and Health Regulations for Construction

L4.6 Solid and Hazardous Wastes (40 CFR Parts 239-299)

- 70 CFR Parts 201-211, Noise Abatement Programs
- 40 CFR Part 243, Guidelines for the Storage and Collection of Residential, Commercial, and Institutional Solid Waste
- 40 CFR Part 260, Hazardous Waste Management System: General

- 40 CFR Part 261, Identification and Listing of Hazardous Waste
- 40 CFR Part 262, Standards Applicable to Generators of Hazardous Waste
- 40 CFR Part 263, Standards Applicable to Transporters of Hazardous Waste
- 40 CFR Part 273, Standards for Universal Waste Management
- 40 CFR Part 279, Standards for the Management of Use Oil

L4.7 Toxic Substances Control Act (TSCA) (40 CFR Parts 700-799)

- 40 CFR Part 710, TSCA Chemical Inventory Regulations
- 40 CFR Part 761, Polychlorinated biphenyls (PCBs) Manufacturing, Processing, Distribution in Commerce, and Use Prohibitions

L4.8 State Regulations

L4.8.1 State of Wyoming

- Wyoming Department of Environmental Quality (WDEQ), Wyoming Air Quality Standards and Regulations (WAQSR), Wyoming Environmental Quality Act (WEQA)
- WAQSR, Chapter 2, Ambient Standards
- WAQSR, Chapter 3, General Emissions Standards
- WAQSR, Chapter 6, Permitting Requirements
- WAQSR, Chapter 7, Monitoring Requirements
- WAQSR, Chapter 8, Non-attainment Area Regulations
- WAQSR, Chapter 9, Visibility Impairment/Particulate Matter Fine Controls
- WAQSR, Chapter 13, Mobile Sources
- WDEQ Water Quality Standards (WQS), Chapter 1, Surface Water Quality Standards
- WQS, Chapter 4, Regulations for Release of Oil and Hazardous Substances into Waters of the State
- WQS, Chapter 8, Quality Standards for Wyoming Groundwater
- WQS, Chapter 9, Wyoming Groundwater Pollution Control Permit
- WDEQ Solid and Hazardous Waste Division (SHWD) Hazardous Waste Permitting and Corrective Action
- SHWD Voluntary Remediation
- SHWD Inspection and Compliance
- SHWD Storage Tank Program

L4.8.2 State of Colorado

- Colorado Department of Public Health and Environment, Colorado Board of Health, Air Quality Control Commission, Solid and Hazardous Waste Commission, Water Quality Control Commission

- Air Quality Control Commission: Air Quality Standards, Designation and Emission Budgets, Common Provisions Regulation, Procedural Rules
- Air Quality Control Commission, Regulation Number 8, Control of Hazardous Air Pollutants
- Air Quality Control Commission, Regulation Number 19, Control of Lead Hazards
- Colorado Hazardous Waste Control Act, Title 25, Article 15, Parts 1, 2, 3, and 5
- Hazardous Waste Regulations, 6 Code of Colorado Regulations (CCR) 1007-3:
    - Part 2, Requirements for Siting of Hazardous Waste Disposal Sites
    - Part 3, Requirements for Inspection of Off-Site Hazardous Waste Disposal Sites
- Hazard Waste Regulations, 6 CCR 1007-2
- Water Quality Control Commission, Regulation 31: The Basic Standards and Methodologies for Surface Water
- Water Quality Control Commission, Regulation 41: The Basic Standards for Ground Water
- Colorado River Basin Salinity Control Act

L4.8.3 State of Utah

- Utah Department of Environmental Quality: Division of Air Quality, Division of Solid and Hazardous Waste, Division of Water Quality
- Utah Administrative Code, Title 19, Chapter 2, Section 109, Air Quality Standards
- Utah Administrative Code, Title 19, Chapter 2, Section 112, Generalized Condition of Air Pollution Creating Emergency – Sources Causing Imminent Danger to Health – Powers of Executive Director – Declaration of Emergency
- Utah Administrative Code, Title 19, Chapter 6, Hazardous Substances
- Utah Administrative Code, Title R315, Environmental Quality, Solid and Hazardous Waste
- Utah Administrative Code, Title 19, Chapter 5, Section 114, Spills or discharges of oil or other substance

L4.8.4 State of Nevada

- Nevada Division of Environmental Protection: Bureau of Air Pollution Control, Bureau of Waste Management, Bureau of Water Quality Planning
- Nevada Administrative Code, Chapter 445B.2201, Hazardous air pollutants and toxic regulated air pollutants: identification
- Nevada Administrative Code, Chapter 445B.22013, Hazardous air pollutants and toxic regulated air pollutants: prohibited discharge
- Nevada Administrative Code, Chapter 445B.22097, Standards of quality for ambient air
- Nevada Administrative Code, Chapter 459.952 – 459.9542, Regulation of Highly Hazardous Substances and Explosives
- Nevada Administrative Code, Chapter 590.700 – 590.790, Cleanup of Discharged Petroleum
- Nevada Administrative Code, Chapter 445A.121, Standards applicable to all surface water

- Nevada Administrative Code, Chapter 445A.1236, Standards for toxic materials applicable to designated waters
- Nevada Administrative Code, Chapter 445A.226 – 445A.22755, Action Levels for Contaminated Sites
- Nevada Administrative Code, Chapter 445A.345 – 445A.348, Notification of Release of Hazardous Substance

L5.0 HAZARDOUS MATERIALS MANAGEMENT PLAN REQUIREMENTS

The following sections provide specific methods for the Construction Contractor(s) to use in developing and implementing the HMMP. The Construction Contractor(s) shall provide TransWest with all information requested in the forms at the end of this document. Additionally, the Construction Contractor(s) shall complete any other required federal, state, or local government forms.

L5.1 Certifications, Amendments, and Designation of Emergency Response Coordinator

L5.1.1 Certifications

The Construction Contractor(s) shall certify that all of the information provided in the HMMP is accurate and complete to the best of its knowledge. The Construction Contractor(s) shall also certify that it is committed to implementing the HMMP as written.

L5.1.2 Amendments

The Construction Contractor(s) shall agree to make all necessary and appropriate amendments to the HMMP and submit any and all such amendments to TransWest and the appropriate federal, state, or local government agencies (if required) within seven days of finding that an amendment is necessary.

Amendments to the HMMP shall be necessary under any of the following circumstances:

- Applicable laws or regulations are revised.
- A 100 percent or more increase of a previously disclosed hazardous material is used, stored, or transported to or from a Project facility or construction site.
- Any handling of a previously undisclosed hazardous material subject to inventory requirements.
- A change in properties of a previously disclosed hazardous material (e.g., solid to liquid).
- A change of business address, name, or ownership.
- The list of emergency coordinator changes.
- The list of emergency equipment changes.

L5.1.3 Emergency Response Coordinator

The Construction Contractor(s) shall identify an Emergency Response Coordinator for hazardous materials management and emergency response. Two alternates shall also be identified. Business, residential, and mobile phone or pager numbers shall be provided for all three persons to allow for

contact on a 24-hour basis. Primary and alternate emergency response coordinators shall be knowledgeable of the chemicals and processes involved in construction of the Project, and will have the authority to commit Construction Contractor resources to implement the HMMP. The emergency response coordinator and his/her alternates shall also have stop-work authority in case of non-compliance or danger to human health or the environment.

L5.2 Facilities Description and Inventory of Materials

L5.2.1 Site Maps

The Construction Contractor(s) shall provide site maps or facility maps in the HMMP that include storage and safety precautions for each location where hazardous materials and hazardous wastes are kept. At a minimum, the maps shall include the following information:

- Orientation and scale
- Total land area in square feet
- Entrances and exits
- Buildings and/or temporary trailers
- Parking areas
- Adjacent land uses (if business, indicate business name)
- Surrounding roads, storm drains, and waterways (including streams and wetlands)
- Locations of hazardous materials and hazardous waste storage areas
- Underground and aboveground storage tanks
- Containment or diversion structures (curbs, dikes, earthen berms, retention ponds)
- Shutoff valves and/or circuit breakers
- Location of emergency response materials and equipment
- Location of material safety data sheets (MSDSs), the HMMP and the Spill Prevention and Response Plan
- Location of emergency assembly area

L5.2.2 Inventory

The Construction Contractor(s) shall maintain a complete inventory, using TransWest-provided forms, of all hazardous materials kept at Project facilities and/or construction sites. The inventory shall include MSDSs for such materials. During each work shift, the MSDSs shall be readily available to all employees. The MSDSs shall provide basic emergency response information for small and large releases of the hazardous materials. When and where bulk hazardous materials are used, the U.S. Department of Transportation's (USDOT) Emergency Response Guidebook shall be an acceptable reference. The Construction Contractor(s) shall be responsible for consulting with the relevant agencies if they handle extremely hazardous substances. The Construction Contractor(s) shall have a comprehensive hazardous materials management program in place and shall use non-hazardous substances in construction, operation, and maintenance activities to the extent possible.

L6.0 HAZARDOUS MATERIALS MANAGEMENT

L6.1 Types of Hazardous Materials

Hazardous materials used during Project construction may include petroleum products such as gasoline, diesel fuel, and hydraulic fluid; lubricating oils and solvents; cleansers; explosives; and other substances. Some of these materials will be used at material yards and on the right-of-way (ROW) to operate and maintain equipment during construction. Explosives may be used for blasting rock where needed to install transmission structure foundations or anchors and possibly on rare occasions to facilitate access road construction (see Appendix C – Blasting Plan). Small quantities of other materials such as pesticides, herbicides, fertilizers, paints, and chemicals may be used during Project operation and maintenance activities. Pesticides and herbicides are hazardous materials and they will be used according to manufacturer labeling (see Appendix N – Noxious Weed Management Plan).

L6.2 Storage of Hazardous Materials

The Construction Contractor(s) shall use designated material yards for storing hazardous materials. The material yards shall be located more than 100 feet from wetlands and intermittent streams, 200 feet from water supply wells or springs, and more than 500 feet from perennial streams. The Construction Contractor(s) shall coordinate with the Compliance Inspection Contractor (CIC) when topographic conditions and/or limited space may require that one or more material yards lie within the 100-, 200-, or 500-foot distances above. Hazardous materials shall not be stored in areas subject to flooding or inundation. At the material yards, the Construction Contractor(s) shall:

- Limit the quantity and the amount of time that hazardous materials are stored near water bodies.
- Per the West-wide Energy Corridor (WWEC) Final Programmatic Environmental Impact Statement (EIS) BMP PHS-11 in the Draft EIS (DEIS), the Applicant shall provide secondary containment for all on-site hazardous materials and waste storage tanks. Secondary containment structures shall be sized to contain 110 percent of the volume of the largest single container, with sufficient freeboard to capture precipitation, where applicable. Areas that require secondary containment structures include liquid and hazardous waste drum storage areas, aboveground storage tanks, and tanker trucks that are parked at one location for more than two days. Secondary containment structures may include, but are not limited to:
    - Spill containment pallets in which 55-gallon or similar-sized drums can be placed.
    - Earthen berms or trenches lined with plastic sheeting.
    - Concrete containment pits or other impervious basins.
    - Double-walled aboveground storage tanks.
- Maintain adequate amounts of absorbent materials and containment booms to enable the rapid cleanup of a minor spill. The Spill Prevention and Response Plan (Appendix S) lists the actions to take should a minor or moderate to large spill occur.
- Provide adequate lighting for locations where hazardous materials are used and stored.
- Ensure that personnel trained in hazardous materials management are utilized to monitor activities at the material yards.

L6.2.1 Physical Storage Requirements

Storage Containers

In accordance with the WWEC Final Programmatic EIS BMP PHS-10 in the DEIS, all hazardous materials, including vehicle and equipment fuels, brought to the Project site shall be in appropriate containers and shall be stored in designated and properly designed storage areas with appropriate secondary containment features. Excess hazardous materials shall be removed from the Project site after completion of the activities in which they are used.

Containers storing hazardous materials shall be compatible with the materials stored. If the container is damaged or is leaking material, the material shall be transferred to an undamaged container. The Construction Contractor(s) shall inspect containers at least once every week to verify the integrity of the containers and containment systems. Containers used for transporting hazardous materials shall comply with applicable USDOT and state department of transportation requirements.

Incompatible Materials

Hazardous materials, including hazardous wastes, shall not be placed in containers that previously held incompatible wastes or materials.

Ignitable or Reactive Materials

Containers holding hazardous wastes, or materials that are reactive or may ignite, shall be located at least 50 feet from the material yard's property line. "No Smoking" signs shall be conspicuously placed where there is a hazard from ignitable or reactive material.

Explosives

See Appendix C – Blasting Plan.

Container Management

Containers holding hazardous wastes shall be kept closed at all times, except when it is necessary to add or remove contents. Before handling and/or transporting containers of hazardous wastes, the containers shall be inspected to ensure they are sealed properly. Per the Applicant Committed EMM TWE-61, hazardous materials shall not be drained onto the ground or into drainage areas.

Secondary Containment

Secondary containment structures may include, but are not limited to, those structures mentioned above.

Security

Hazardous materials shall be stored in secure areas to prevent damage, vandalism, or theft. All storage containers shall remain sealed when not in use. Storage areas shall be gated, locked, and/or guarded at night and/or during non-construction periods.

L6.2.2 Container Labeling Requirements

The Construction Contractor(s) shall comply with all labeling requirements for any container, including tanks used on-site to store accumulated hazardous wastes. The containers shall be labeled with the information below and as required per 40 CFR Part 262:

- The accumulation start date and/or the date the 90-day storage period began.
- The words: "Hazardous Waste."
- Warning words indicating the particular hazards of the waste, such as flammable, corrosive, reactive, or toxic.
- The name and address of the facility that generated the waste.

L6.3 Refueling and Servicing

Construction vehicles and equipment generally shall be refueled and serviced in designated areas more than 100 feet from wetlands and intermittent streams, at least 200 feet from water supply wells or springs, and more than 500 feet from perennial streams. Refueling locations generally shall be flat to minimize the chance that a hazardous material spill could reach a water body. Fueling locations shall have spill kit and fire suppression equipment available.

In most cases, smaller rubber-tired vehicles shall be refueled and serviced at local gas stations or material yards. Tracked vehicles typically shall be refueled and serviced on-site. In some cases, pickup trucks or tankers shall be used to refuel and service construction vehicles on the ROW.

Washing of construction vehicles, such as concrete trucks, shall be allowed only in designated areas more than 100 feet from streams and wetlands. Washing areas shall be contained with barriers to prevent migration of wastewater and/or sediments into water bodies. Waste concrete material shall be removed and properly disposed of once it has hardened. In addition, all preventive measures shall be followed as they relate to vehicle washing procedures (see Appendix N – Noxious Weed Management Plan).

L6.4 Transportation of Hazardous Materials

Procedures for loading and transporting fuels and other hazardous materials shall meet the minimum requirements established by the USDOT, applicable state departments of transportation in Wyoming, Colorado, Utah, and Nevada, and local government requirements. Prior to transporting hazardous materials, appropriate shipping papers shall be completed. Transporting hazardous materials shall be performed by a hazardous material transport firm in accordance with USDOT regulations. Additionally, the Construction Contractor(s) shall ensure all handling or packaging of hazardous materials and all paperwork for transport of hazardous materials is performed by properly trained personnel in accordance with USDOT and applicable state regulations.

All hazardous materials used for the Project shall be properly stored in approved containers and labeled, including during transportation. Fuel trucks transporting fuel on-site shall travel only on approved access roads. Smaller containers shall be used on-site to transport needed amounts of hazardous materials to a specific location. Transfer of materials from large to small containers shall be performed using appropriate equipment, including pumps, hoses, and safety equipment; hand pouring techniques shall not be utilized. These smaller containers also shall be clearly labeled. Special provisions apply to transporting explosives (see Appendix C – Blasting Plan).

L6.5 Generating Hazardous Waste

L6.5.1 Prior to Construction Activities

Prior to the start of construction activities, the Construction Contractor(s) shall only purchase the amount of materials that are expected to be used during construction activities.

L6.5.2 During Construction Activities

The Construction Contractor(s)r shall provide all drums (Department of Transportation Spec. 1A1 or 1A2), roll-off boxes, or other containers necessary to contain wastes generated during the performance of work, including wastes generated in response to spill response and cleanup activities, unless otherwise specified. The Construction Contractor(s) shall provide containment areas for liquids, hazardous wastes, and special wastes as required. The containment areas shall be impervious to the materials being stored and be kept in good condition. Temporary storage on the ROW shall not require protection from the weather. Temporary storage shall not exceed seven days.

During the Project's construction activities, the Construction Contractor(s) shall make every effort to minimize the amount of hazardous wastes generated. To this end, the Construction Contractor(s) shall use alternative non-hazardous materials when available; recycle usable materials such as oils, paints, and batteries to the maximum extent; and filter and reuse solvents and thinners whenever possible.

L6.5.3 After Construction Activities

The Construction Contractor(s) shall collect all hazardous waste(s) at the close of each workday and place the waste(s) in an approved location. The Construction Contractor(s) shall be responsible for proper packaging, labeling, marking, and storing of the waste(s). The Construction Contractor(s) shall keep hazardous, non-hazardous, special, and general trash wastes separate and shall not mix waste streams. If the Construction Contractor(s) cannot adequately classify a waste, the waste shall be assumed to be hazardous.

L6.6 Disposal of Hazardous Waste

Prior to the start of construction activities, the Construction Contractor(s) shall assign personnel to dispose of hazardous wastes. The assigned personnel shall have completed training in the handling and disposal of hazardous wastes.

Any generator of hazardous waste shall apply for an U.S. Environmental Protection Agency (EPA) Identification (ID) Number, which is needed to complete the Uniform Hazardous Waste Manifest for transporting wastes off-site. A hazardous waste generator can accumulate hazardous wastes on-site for a period of up to 90 days without having to obtain a permit as a storage facility. Hazardous wastes shall not be stored for longer than 90 days.

In accordance with the WWEC Final Programmatic EIS BMP PHS-12 and PHS-17 in the DEIS, Project-related hazardous wastes, including wastes generated as a result of component cleaning, shall be properly containerized and removed periodically for disposal at appropriate off-site permitted disposal facilities. All Project-related hazardous wastes shall be disposed of in accordance with all applicable laws and regulations.

L6.7 Contaminated Containers

Containers that once held hazardous materials shall be considered as contaminated containers due to the possible presence of residual hazardous materials. To qualify as a non-hazardous waste, and to be handled as such, the containers shall meet the following requirements:

- The Construction Contractor(s) shall pump out, pour out, or aspirate the container's contents as much as possible to empty the container.
- A container that held compressed gas is empty when the pressure in the container approaches atmospheric pressure.

The actions below shall occur within one year of the container being emptied.

- If empty containers are less than five gallons, they may be disposed of as a non-hazardous solid waste or scrapped.
- If the empty containers are greater than five gallons, they must be handled in the following manner: returned to the vendor for re-use; sent to a drum recycler for reconditioning; or used or recycled on-site.

L6.8 Waste Oil Filters

Used metal canister oil filters can be managed as non-hazardous wastes if:

- They are thoroughly drained of oil that is "free flowing." Oil exiting drop-by-drop is not considered "free flowing."
- The filters are accumulated, stored, and transferred in a closed, rainproof container.
- The filters are transferred for the purposes of recycling.
- The filters are not terne-plated, which is an alloy of tin and lead. Terne-plated oil filters are a hazardous waste, exhibiting the hazardous characteristic of lead. Terne-plated oil filters not recycled must be managed as a hazardous waste.

L6.9 Used Lubricating Oil

Lubrication oil is considered used oil, as indicated below:

- Any oil refined from crude oil and as a result of use has been contaminated with physical or chemical impurities.
- Any oil that is no longer useful to the original purchaser due to extended storage, spillage, or contamination with non-hazardous impurities such as dirt, rags, and water.
- Spent lubricating fluids removed from a truck, heavy equipment, automobile, or bus.

Used oil may be a hazardous waste if:

- The concentrations of PCBs exceed 50 parts per million (ppm).
- Total halogens exceed 1,000 ppm.
- The oil is mixed with a hazardous waste.

Used oil not being burned or recycled shall be managed as a hazardous waste unless laboratory analysis determines that the oil is not hazardous.

ATTACHMENT A
SAMPLE FORMS FOR HAZARDOUS MATERIALS MANAGEMENT PLAN

Certification, Amendments, and Designation of Emergency Coordinator

The Construction Contractor(s) responsible for managing the material yards shall complete and submit the following information:

General Information

Business Name

Facility Street Address

City County Zip Code Phone

Mailing Address (if different)

City County Zip Code Phone

Emergency Coordinator

Primary Emergency Coordinator

Business Phone 24-hour Phone Pager/Cellular Phone

First Alternate

Business Phone 24-hour Phone Pager/Cellular Phone

Second Alternate

Business Phone 24-hour Phone Pager/Cellular Phone

Note: Certification is only necessary if an SPCC Plan is required.

Emergency Contacts

Dial 911 for Emergency Response

Emergency Numbers

Emergency Response (Ambulance, Fire, Police, Sheriff, State Highway Patrol): Call 911

Poison Control Center (800) 456-7707

Nearest Hospitals (2) _____ Phone:_____

_____ Phone:_____

Clean-up Contractor _____ Phone:_____

Other (specify) _____ Phone:_____

Other (specify) _____ Phone:_____

Agency Notifications (to be made by the Proponent's environmental manager or environmental field supervisor or emergency response coordinator)

Wyoming Department of Environmental Quality	(307) 777-7937
Colorado Environmental Release and Incident Reporting	(877) 518-5608
Utah Department of Environmental Quality Hotline	(800) 458-0145
Nevada Division of Environmental Protection Hotline	(888) 331-6337

National Response Center (800) 424-8802

Other (specify) _____ Phone:_____

Other (specify) _____ Phone:_____

Note: The Construction Contractor(s) shall verify and update the emergency numbers on this page before and during Project construction.

Weekly Hazardous Material/Waste Inspection Log

For each item listed below, the Construction Contractor(s) shall indicate whether existing conditions are acceptable (A) or unacceptable (U). Resolution of all unacceptable conditions shall be documented. The Construction Contractor(s) shall inspect all storage facilities on a regular basis, but not less than weekly. The Construction Contractor(s) shall keep records on file of all inspections.

I. Storage Areas for Fuels, Lubricants, and Chemicals

General

A/U

_____ Material yard and storage areas secured
_____ National Fire Protection Association 704 system symbol posted in storage area or at material yard entrance
_____ Storage areas properly prepared and signed
_____ No evidence of spilled or leaking materials
_____ Incompatible materials separated
_____ All containers labeled properly
_____ All containers securely closed
_____ All containers upright
_____ No evidence of container bulging, damage, rust, or corrosion
_____ Material Safety Data Sheets (MSDS) available
_____ Hazardous Materials Management and Spill Prevention and Response plans available

Secondary Containment Areas

A/U

_____ Containment berm intact and capable of holding 110 percent of material stored
_____ Lining intact
_____ No materials overhanging berms
_____ No materials stored on berms
_____ No flammable materials used for berms

Compressed Gases

A/U

_____ Cylinders labeled with contents
_____ Cylinders secured from falling
_____ Oxygen stored at least 25 feet away from fuel
_____ Cylinders in bulk storage are separated from incompatible materials by fire barriers or by appropriate distance

II. Hazardous Waste Management

Waste Container Storage

A/U

_____ No evidence of spilled or leaking wastes
_____ Adequate secondary containment for all wastes
_____ Separate containers for each waste stream – no piles
_____ Waste area not adjacent to combustibles or compressed gases
_____ All containers securely closed
_____ Bungs secured tightly
_____ Open-top drum hoops secured
_____ All containers upright
_____ No evidence of container bulging, damage, rust, or corrosion
_____ Containers are compatible with waste (e.g., plastic liner for corrosives, metal liner for solvents)
_____ No smoking and general danger/warning signs posted

Waste Container Labeling

A/U

_____ Containers properly labeled
_____ Name, address, and EPA ID number or ID number of generator listed
_____ Accumulation start date listed
_____ Storage start date listed
_____ Chemical and physical composition of waste listed
_____ Hazardous properties listed

Non-hazardous Waste Areas

A/U

_____ No litter in material yard
_____ No hazardous wastes with trash such as contaminated soil, oily rags, or other oily materials
_____ Empty oil and aerosol containers are completely emptied for disposal as non-hazardous waste

APPENDIX M
FRAMEWORK HEALTH AND SAFETY PLAN

TABLE OF CONTENTS

M1.0 INTRODUCTION 1

M2.0 PLAN PURPOSE 1

M3.0 PLAN UPDATES 2

M4.0 HEALTH AND SAFETY PLAN IMPLEMENTATION 2

M4.1 PROJECT WORKERS AND THE PUBLIC 2
M4.1.1 Site Access and Security 3
M4.2 SAFE WORK PRACTICES, TRAINING, DOCUMENTATION, AND REPORTING 3
M4.2.1 Safe Work Practices for Each Task 3
M4.2.2 Worker Training Procedures and Requirements 3
M4.2.3 Hazard Training Requirements 4
M4.2.4 Contaminated Soils and/or Groundwater Awareness 4
M4.2.5 Safety Performance Standards 4
M4.3 FEDERAL AND STATE OCCUPATIONAL SAFETY STANDARDS 4
M4.3.1 Nevada 5
M4.3.2 Utah 5
M4.3.3 Wyoming 5
M4.4 POTENTIAL HEALTH AND SAFETY ISSUES 5
M4.4.1 Fire Control and Evacuation Procedures 6
M4.4.2 Heavy Equipment Transportation and Traffic Management 6
M4.5 RESPONSE ACTIONS FOR SAFETY HAZARDS 6
M4.5.1 Authority Notification 7
M4.5.2 Fire Safety Evacuation 7
M4.5.3 Medical Aid Kit Locations 8
M4.5.4 Reporting Serious Accidents 8
M4.6 ENVIRONMENTAL FIELD REPRESENTATIVE(S) 8

ACRONYMS

AED	automatic external defibrillator
ANSI	American National Standards Institute
Applicant	TransWest Express LLC, also TransWest
Base	Project Base
BMP	Best Management Practice
CFR	Code of Federal Regulations
COM Plan	Construction, Operation, and Maintenance Plan
CPR	cardiopulmonary resuscitation
DEIS	Draft Environmental Impact Statement
DIR	Division of Industrial Relations
EMM	Environmental Mitigation Measure
JSA	Job Safety Analysis
mph	miles per hour
NESC	National Electrical Safety Code
Nevada OSHA	Nevada Occupational Safety and Health Administration
NTP	Notice to Proceed
OHV	off-highway vehicle
OSHA	Occupational Safety and Health Administration
PCB	polychlorinated biphenyl
Plan	Health and Safety Plan
POD	Plan of Development
Project	TransWest Express Transmission Project, also TWE Project
ROD	Record of Decision
ROW	right-of-way
SCATS	Safety Consultation and Training Section
the Act	Occupational Safety and Health Act of 1970
TransWest	TransWest Express LLC, also Applicant
TWE Project	TransWest Express Transmission Project, also Project
USPS	United States Postal Service
WWEC	West-wide Energy Corridor

M1.0 INTRODUCTION

This document provides a framework for a Health and Safety Plan (Plan) which will describe the measures to be taken by TransWest Express LLC (TransWest or Applicant) and its Construction Contractor(s) to address potential health and safety issues and protect both workers and the public during construction, operation, and decommissioning of the TransWest Express Transmission Project (TWE Project or Project).

This framework is prepared in accordance with Environmental Mitigation Measures (EMMs) TWE-51 *"The TWE Project will be designed, constructed, and operated to meet or exceed the requirements of the National Electrical Safety Code (NESC), U.S. Department of Labor, Occupational Safety and Health Administration [OSHA] standards, and the Applicant's requirements for safety and protection of landowners and their property"* and TWE-56 *"As part of the [Construction, Operation and Maintenance] COM Plan, the Applicant will provide a Health and Safety Plan, which will outline measures to protect workers and the general public during construction, operation, and decommissioning of the TWE Project"*.

M2.0 PLAN PURPOSE

The Construction Contractor(s) will be responsible for preparing and implementing a Health and Safety Plan in compliance with all local, state, and federal regulations pertaining to health and safety. The purpose of the Plan is to provide a description of measures that will be implemented in order to minimize safety-related situations that could occur and provide procedures to assist in the protection of workers and the public during the construction phase of the Project.

The Plan will provide specific information for implementing EMMs TWE-51 and TWE-56. Best Management Practices (BMPs) identified in the Draft Environmental Impact Statement (DEIS) which are listed below. The identified BMPs and Mitigation Measures have not been finalized at this time and may be updated, changed, or eliminated in future revisions of the Plan. BMPs which may be implemented include: PHS-4, PHS-5, PHS-6, and PHS-7, obtained from the Record of Decision (ROD) for the West-wide Energy Corridor (WWEC).

The management practices and activities in the Plan are intended to accomplish the following objectives:

- Educate construction workers on the hazards associated with the Project and how to identify them; the safety measures that must be taken to prevent injury; how to identify potentially contaminated soils and/or groundwater; and the procedures for ensuring personnel receive necessary training.
- Identify federal and state occupational standards regarding occupational safety and safe work practices.
- Establish fire safety evacuation procedures.
- Explain the appropriate response actions for each safety hazard and develop and describe the procedures and mechanisms for responding to and reporting serious accidents to appropriate agencies and for notifying the appropriate authorities of safety issues.
- Identify requirements for temporary fencing around staging areas, storage yards, and excavation areas during construction or decommissioning activities, as well as appropriate

measures to be taken during construction of the Project to limit public access to hazardous facilities.

- Designate environmental field representative(s) to be on site to observe, enforce, and document adherence to this Plan.
- Identify where medical kits are located.

M3.0 PLAN UPDATES

The Construction Contractor(s) will be responsible for preparing and implementing a Health and Safety Plan in compliance with all local, state, and federal regulations pertaining to health and safety. This framework for the Plan will be updated for the ROD Plan of Development (POD) and will include relevant mitigation measures to ensure regulation compliance and safety. The framework for the Plan for the Notice to Proceed (NTP) POD will include updates as needed based on final design and engineering.

M4.0 HEALTH AND SAFETY PLAN IMPLEMENTATION

The following subsections describe the Health and Safety Plan to be implemented only during construction of the Project. Similar to this Plan for construction, plans developed for operation would address critical aspects of operations including, but not limited to, hazardous material and waste management, stormwater management, and monitoring for external impacting factors (e.g., seismic activity, landslides). Operating plans would establish detailed procedures, assign responsibilities, and establish self-auditing processes for evaluating overall effectiveness and sufficiency of operations. Mitigation strategies would be developed for both routine and off-normal operating conditions. Under normal operating conditions, health and safety impacts to the public from any of the approved systems would be minimal. Mitigation of impacts under failure modes for the various systems; however, would involve both design considerations and active emergency response measures.

Decommissioning involves activities similar to construction, and thus presents many of the same health and safety hazards. These hazards mainly affect workers, but some, including increased construction traffic and the presence of potentially hazardous work areas, also affect members of the public, albeit at low risk levels. Decommissioning phases are expected to last for shorter periods of time than the construction phase and may involve fewer specific steps. In addition, the majority of activities would occur within the right-of-way (ROW), and their related health and safety impacts would be imposed primarily on the deconstruction workforce. However, impacts to the public would also occur from activities occurring off the ROW such as material storage yards; component dismantlement; salvage recycling operations; and as a result of increased traffic on public roadways. Impacts to the public could also occur from unauthorized access to work sites and storage and recycling facilities.

M4.1 Project Workers and the Public

Workers are protected through the implementation of the Health and Safety Plan. The public is protected by restricting public access to construction work areas; implementing appropriate site security measures, traffic control, dust control, and hazardous material management plans; by coordinating with emergency service providers; and notifying property owners of any hazardous operations to be conducted, such as blasting. Construction sites should be secured at the end of the workday to protect the equipment and the general public. The following subsections provide further details regarding the procedures to be utilized for the protection of workers and the public.

M4.1.1 Site Access and Security

The Construction Contractor(s) will develop Project orientation training which will be part of the NTP POD. Project orientation training will include basic hazard awareness, site-specific hazards, safe working practices, and emergency procedures. Only personnel with a visible hard-hat decal or daily visitor pass, indicating they have completed Project orientation training, will be allowed on any Project work area. Members of the public will not be allowed access to potentially hazardous facilities, including construction work sites and staging yards for materials and equipment. Visitors to any construction site or material yard must have a signed Safety and Environmental Visitor Form indicating that they have been apprised of basic hazards and environmental issues associated with the Project. Visitors must be escorted at all times by Project personnel, who have completed Project orientation training and are familiar with the Project site. In addition, access to material and equipment staged at substation sites and material yards will be restricted by means of fencing, locked gates, and/or posted security guards. Where fencing is used, it will be suitable to restrict transient traffic, off-highway vehicles (OHVs), and the public from accessing potentially hazardous areas. Existing gates on the ROW will be locked, monitored, or left open as determined by the property owner. Personal vehicles must be parked in designated locations, as determined by the Construction Contractor(s). Only approved Project vehicles will be allowed on construction sites, material yards, and transmission ROWs. Security guards will be stationed at major sites as necessary. Cameras and night lighting will be utilized where warranted.

M4.2 Safe Work Practices, Training, Documentation, and Reporting

The Construction Contractor(s) will maintain appropriate standards, safe work practices, hazard training, documentation, and reporting in accordance with their respective Plans. As described in Section 4.1 Protect Workers and the Public, these plans will conform to the requirements of the OSHA.

M4.2.1 Safe Work Practices for Each Task

The Construction Contractor(s) will develop a task-specific Job Safety Analysis (JSA) for each construction task. The JSA provides a list of steps, potential hazards, safety procedures, and recommended controls. They specify equipment to be used, as well as inspection and training requirements.

Training on general safe work practices is a requirement for TransWest and its contractors, as specified in their respective Plans. Training topics may also include heat illness prevention, cardiopulmonary resuscitation (CPR)/automatic external defibrillator (AED), first aid, emergency action and fire prevention, and safe driving. No horseplay or fighting will be tolerated. Drugs and alcohol are prohibited, and pets are not permitted on any Project site or ROW. Guns are prohibited on any Project site except for authorized security personnel or law enforcement officers. Unless otherwise posted, vehicles must not exceed 15 miles per hour (mph) along approved access roads, or 5 mph in construction yards. In addition, seatbelts must be worn in all motorized vehicles.

M4.2.2 Worker Training Procedures and Requirements

All Project personnel will participate in worker training and sign a roster verifying their attendance. Information from rosters will be logged into a spreadsheet for ease of verifying Project worker training attendance records. All attendees will be provided with a hard-hat decal, as a visible means of verifying their attendance. Trade personnel will be required to receive essential skills and safety training through an appropriate apprenticeship program, which qualifies them to perform the work of their trade. Non-trade personnel will be required to have received essential skills and safety training

appropriate to their job tasks through their employers' training programs. Records of all training will be available for audit as required.

M4.2.3 Hazard Training Requirements

Construction Contractor(s) shall have an appropriate training program in accordance with its health and safety practices, as well as federal, state, and local laws and regulations. Job-specific construction hazards may be addressed before work begins each day at a tailgate meeting. Typically, the daily tailgate meetings will include a review of the JSA for the work being performed. Other potential safety discussions could include site access, work practices, security, transportation of heavy equipment, traffic management, emergency procedures, wildlife encounters, and fire control and management. If the work plan changes later in the day, an additional tailgate meeting may be held. Anyone arriving at the site after the tailgate meeting will be briefed on the JSA and other tailgate issues discussed prior to entering the construction site, and will sign the tailgate roster.

M4.2.4 Contaminated Soils and/or Groundwater Awareness

Worker training will also address identification of and appropriate response actions for potentially contaminated soils and/or groundwater

M4.2.5 Safety Performance Standards

TransWest will monitor all Project-related workplace injuries and illnesses utilizing OSHA Recordkeeping and Reporting Standards. This includes recordable cases, as well as first aid cases. In addition, TransWest will monitor close calls and motor vehicle incidents reflecting standard OSHA metrics, including recordable cases and cases resulting in lost time.

TransWest and its Construction Contractor(s) will provide the proper tools, equipment, personal protective equipment, and appropriate training for their respective personnel as needed to perform their specific job duties. All safety requirements will be implemented in accordance with OSHA safety standards.

M4.3 Federal and State Occupational Safety Standards

The Project will be constructed in accordance with the NESC and other relevant industry standards (e.g., American National Standards Institute [ANSI]), to insure that adequate safety clearances and provisions are provided. Safety measures including fencing, warning signs, and equipment grounding will be provided per code requirements. All construction personnel will be required to follow OSHA Standards throughout Project construction.

Section 18 of the Occupational Safety and Health Act of 1970 (the Act) encourages States to develop and operate their own job safety and health programs. OSHA approves and monitors such State plans. States must set job safety and health standards that are "at least as effective as" comparable federal standards. Most States adopt standards identical to federal ones. States have the option to promulgate standards covering hazards not addressed by federal standards. A State must conduct inspections to enforce its standards, cover public (State and local government) employees, and operate occupational safety and health training and education programs. States in the Project area with Approved Occupational Safety and Health Plans include Wyoming, Utah, and Nevada.

M4.3.1 Nevada

The Nevada State Plan is administered by the Division of Industrial Relations (DIR), Department of Business and Industry. Within the DIR, an enforcement section and consultation section have been established. Enforcement is provided by the Nevada Occupational Safety and Health Administration (Nevada OSHA), and Consultation is provided by the Nevada Safety Consultation and Training Section (SCATS). The Nevada State Plan applies to all public and private sector employers in the State, with the exception of federal employees, the United State Postal Service (USPS), private sector maritime, employment on Indian Lands, and areas of exclusive federal jurisdiction.

Nevada adopts federal OSHA standards by reference and enforces OSHA standards contained within 29 Code of Federal Regulations (CFR), Parts 1910 (General Industry), 1926 (Construction) and 1928 (Agriculture). In addition, Nevada has adopted additional requirements to include: safety programs, cranes, steel erection, construction projects, asbestos, explosives, ammonium perchlorate, and photovoltaic system projects.

M4.3.2 Utah

The Utah Occupational Safety and Health Division is part of Utah's Labor Commission. The Utah State Plan applies to all public and private sector places of employment in the State, with the exception of federal employees, the USPS, private sector maritime, Hill Air Force Base, Tooele Army Depot which includes the Tooele Chemical Demilitarization Facility, and certain agricultural related operations (field sanitation and temporary labor camps), which are subject to federal OSHA jurisdiction. While Utah adopts most federal standards identically, the State periodically supplements federal standards with additional requirements.

M4.3.3 Wyoming

The Wyoming State Plan applies to all public and private sector places of employment in the State, with the exception of federal employees (including those employed at Yellowstone and Grand Teton National Parks), the USPS, private sector maritime, employment at Warren Air Force Base and at the Naval Petroleum and Oil Shale Reserve in Casper, and certain agricultural related operations (field sanitation and temporary labor camps), which are subject to federal OSHA jurisdiction.

The Wyoming State Plan adopts all federal standards identically except for 29 CFR Part 1910 Subparts A, B, and C, and Part 1926 Subparts A and B, which have been reworded to reflect the Wyoming's Safety Act. New standards are promulgated by the state of Wyoming within six months of promulgation by the Secretary of Labor. Wyoming cannot adopt standards that are more stringent than corresponding federal standards, but can adopt standards for industries not covered by federal OSHA. Wyoming has adopted the federal recordkeeping and reporting requirements identical to the federal rule, 29 CFR Part 1904.

M4.4 Potential Health and Safety Issues

Most occupational health and safety issues during the construction, operation, and decommissioning of electric power projects include, among others, exposure to physical hazards from use of heavy equipment and cranes; trip and fall hazards; exposure to dust and noise; falling objects; work in confined spaces; exposure to hazardous materials; and exposure to electrical hazards from the use of tools and machinery. Occupational health and safety hazards specific to electric power transmission projects primarily include:

- Live power lines

- Working at height on poles and structures
- Exposure to chemicals (primarily handling of pesticides (herbicides) used for ROW maintenance and exposure to polychlorinated biphenyls (PCBs) in transformers and other electrical components).

Additional health and safety issues include, but are not limited to the following:

- Working in or near traffic;
- Driving and hiking in rugged terrain;
- Working in inclement weather and in extremes of heat and cold;
- Coming into contact with poisonous snakes, spiders, and plants;
- Falling into excavation areas;
- Falling from structures or from ladders;
- Working with or around blasting materials;
- Working near energized electric facilities;
- Working in isolated areas prone to wildland fire;
- Working in areas located far from emergency medical services;
- Encountering buried utilities;
- Working around noisy equipment and/or helicopters; and
- Working near abandoned mines.

M4.4.1 Fire Control and Evacuation Procedures

Refer to Appendix H – Fire Protection Plan.

M4.4.2 Heavy Equipment Transportation and Traffic Management

Refer to Appendix U – Traffic and Transportation Management Plan.

M4.5 Response Actions for Safety Hazards

At least two personnel on each construction crew will have first aid, CPR, AED, and bloodborne pathogen training. Fire safety personnel will periodically inspect work along the ROW and will be certified emergency responders. Crews will also be familiar with evacuation routes should emergency evacuation be needed. Additional emergency support will be available by contacting the Project Base (Base), which provides direct lines to emergency medical services, life flight, fire protection, County Sheriff's Departments, and State Highway Patrols. Base will be staffed by personnel that are trained to monitor construction field activities, both in the air and on the ground. Base will provide and/or coordinate necessary emergency responses, notifications, and formally document events. When

appropriate, Base will trigger a call to emergency services. Crews will have direct contact with Base by means of radios, cell phones, and satellite phones if necessary. While working through the appropriate procedures, Base will provide the following support:

- Dispatching field security agents and field safety advisors to the scene of an incident/event.
- Beginning an incident/event timeline as an event unfolds, documenting times when actions or events occur.
- Launching a wide variety of notifications to Project and TransWest leadership. These notifications will be made to different distribution lists based on the level and type of incident/event. Notifications will be made within minutes of an event and contain information regarding who, what, when, where, any action taken, and the status of the incident/event.
- Staying in communication with the field personnel reporting an incident/event and the procedure will ensure expeditious response and accurate information.

M4.5.1 Authority Notification

Construction crews will immediately alert the on-site TransWest representative of all incidents. The TransWest representative will provide appropriate notification to Base. If a TransWest representative is not on-site, Construction Contractor personnel will be provided with a radio to make notification themselves.

Base will then be responsible for notifications to appropriate Project personnel and TransWest management. These notifications will be made to different distribution lists based on the level and type of incident/events. Notifications will be made within minutes of an event and provide information regarding who, what, when, where, any action taken, and the status of the incident/event.

M4.5.2 Fire Safety Evacuation

The Health and Safety Plan will also include fire safety evacuation procedures and incorporates the Fire Protection Plan. As previously described, TransWest will also maintain a Base operation, which will be available during all work hours, to assist with effective communications with crews, emergency agencies, and Project management. Base will facilitate evacuation/rescue efforts if required. An evacuation route map showing safe exit routes and assembly locations will be shared as part of the worker training orientation. In the event of fire or other site emergency, the following evacuation procedures will be followed to track personnel leaving the work site:

- At each work site the designated point of contact will verify the current head count and notify Base.
- Base will notify fire dispatch and emergency responders of personnel locations, headcount, rally points, and headings to assist in evacuation operations.
- Radios and global positioning system tracking units will be monitored at Base. Updated information will be relayed to Base as needed.
- Upon arrival at the rallying points, all personnel to be evacuated will be required to checkout with Base before leaving.

M4.5.3 Medical Aid Kit Locations

Facilities/areas such as substations and construction yards will contain first aid kits that are appropriate for the number of personnel working at the respective sites. First aid kits and fire extinguishers will also be stored in Project vehicles. An AED will be maintained at each terminal site.

M4.5.4 Reporting Serious Accidents

As previously described, Base will monitor field personnel and maintain radio communications with a designated point of contact at each work site. All incidents will be reported immediately to Base, which will initiate notifications as described previously. In addition, TransWest will have environmental monitors, field safety advisors, fire marshals, and security agents in the field to monitor, respond to, and report any incidents.

M4.6 Environmental Field Representative(s)

An environmental field representative will be designated as TransWest's field, fire, safety, and security team lead. In this role, the environmental field representative will be responsible for safety, fire preparedness, security, and Project Base operations and will provide management oversight for Project personnel fulfilling these roles. The environmental field representative will work closely with these individuals to implement the Health and Safety Plan during construction.

APPENDIX N
FRAMEWORK NOXIOUS WEED MANAGEMENT PLAN

TABLE OF CONTENTS

N1.0 INTRODUCTION 1

N1.1 PLAN PURPOSE 1
N1.2 PLAN UPDATES 3
N1.3 GOALS 3
N1.4 AGENCY REGULATIONS 3
N1.4.1 All Lands 7
N1.4.2 Bureau of Land Management 7
N1.4.3 United States Forest Service 7
N1.4.4 National Park Service 8
N1.4.5 Bureau of Reclamation 8
N1.4.6 Utah Reclamation Mitigation and Conservation Commission 8
N1.4.7 State of Colorado 8
N1.4.8 State of Nevada 9
N1.4.9 State of Utah 9
N1.4.10 State of Wyoming 9
N1.5 TIMELINE 9
N1.6 RESPONSIBLE PARTIES 9

N2.0 NOXIOUS WEED MANAGEMENT PLAN 10

N2.1 STATE- AND COUNTY-LISTED NOXIOUS WEEDS 10
N2.1.1 APHIS 26
N2.1.2 State of Wyoming 26
N2.1.3 State of Colorado 26
N2.1.4 State of Utah 26
N2.1.5 State of Nevada 27
N2.1.6 BLM or Forest Service Invasive Weeds 27
N2.2 NOXIOUS WEED MANAGEMENT 27
N2.2.1 Weed Management Personnel Requirements 28
N2.2.2 Pre-Construction Noxious Weed Surveys 28
N2.2.3 Identification of Problem Weed Areas 30
N2.2.4 Preventative Measures 30
N2.2.5 Treatment Measures 31
N2.2.6 Reclamation Measures 32

N3.0 PESTICIDE APPLICATION, HANDLING, SPILLS, AND CLEANUP 32

N3.1 PESTICIDE APPLICATOR TRAINING 32
N3.2 PESTICIDE APPLICATION AND HANDLING 33
N3.3 PESTICIDE SPILLS AND CLEANUP 40

N4.0 MONITORING 40

N5.0 REFERENCES 41

TABLES:

TABLE N1 APPLICABLE NOXIOUS WEED MANAGEMENT MEASURES IDENTIFIED IN DRAFT EIS .. 2
TABLE N2 WEED PERSONNEL CONTACT INFORMATION AND COMMENTS PROVIDED BY AGENCY FOR THE TWE PROJECT 4
TABLE N3 COLORADO NOXIOUS WEEDS AND POTENTIAL FOR OCCURRENCE IN COLORADO PROJECT COUNTY (MOFFAT) 11
TABLE N4 NEVADA NOXIOUS WEEDS AND POTENTIAL FOR OCCURRENCE IN NEVADA PROJECT COUNTIES (CLARK, LINCOLN) 19
TABLE N5 UTAH NOXIOUS WEEDS AND POTENTIAL FOR OCCURRENCE IN UTAH PROJECT COUNTIES 21
TABLE N6 WYOMING NOXIOUS WEEDS AND POTENTIAL FOR OCCURRENCE IN WYOMING PROJECT COUNTIES (CARBON, SWEETWATER) 24
TABLE N7 NOXIOUS WEED PROBLEM AREAS IDENTIFIED IN THE TWE PROJECT FOOTPRINT (ROW, ACCESS ROADS, STAGING AREAS, MATERIAL STORAGE AREAS, ETC.) 29
TABLE N8 HERBICIDE ACTIVE INGREDIENTS PERMITTED FOR TREATING WEEDS FOR THE TWE PROJECT 36

APPENDICES:

ATTACHMENT A BLM PESTICIDE USE PROPOSAL (PUP) TEMPLATE 44
ATTACHMENT B FOREST SERVICE PESTICIDE USE PROPOSAL (PUP) INSTRUCTIONS AND TEMPLATE 50

ACRONYMS

°F	degrees Fahrenheit
APHIS	Animal and Plant Health Inspection Services
Applicant	TransWest Express LLC, also TransWest
BA	Biological Assessment
BE	Biological Evaluation
BLM	Bureau of Land Management
BMP	Best Management Practice
BO	Biological Opinion
CCR	Colorado Code of Regulations
CFR	Code of Federal Regulations
CWA	Clean Water Act
DEIS	Draft Environmental Impact Statement
EDRR	Early Detection Rapid Response
EMM	Environmental Mitigation Measure
EPA	Environmental Protection Agency
ESA	Endangered Species Act of 1973
FEIS	Final Environmental Impact Statement
FIFRA	Federal Insecticide, Fungicide, and Rodenticide Act
FLPMA	Federal Land Policy and Management Act of 1976
GPS	global positioning system
mph	miles per hour
MSDSs	Material Safety Data Sheets
NEPA	National Environmental Policy Act
NISIMS	National Invasive Species Information Management System
NPS	National Park Service
NTP	Notice to Proceed
Plan	Noxious Weed Management Plan
PAR	Pesticide Application Record
POD	Plan of Development
POEA	polyoxyethyleneamine
Project	TransWest Express Transmission Project, also TWE Project
psi	pounds per square inch
PUP	Pesticide Use Proposal
Reclamation	Bureau of Reclamation
ROD	Record of Decision
ROW	right-of-way
SUP	Special Use Permit
TransWest	TransWest Express LLC, also Applicant
TWE Project	TransWest Express Transmission Project, also Project
U.S.C.	United States Code
URMCC	Utah Reclamation Mitigation and Conservation Commission
USDA	United States Department of Agriculture
USDOI	United States Department of Interior
USFS	United States Forest Service
USFWS	United States Fish and Wildlife Service
WEAP	Worker Environmental Awareness Program
WWPC	Wyoming Weed and Pest Control Act of 1973

N1.0 INTRODUCTION

This framework Noxious Weed Management Plan (Plan) sets forth the methods TransWest Express LLC (TransWest or Applicant) and its Construction Contractor(s) will undertake to prevent, mitigate and control the spread of noxious and invasive weeds during construction, operation and maintenance of the TransWest Express Transmission Project (TWE Project or Project).

Federal Invasive Species Executive Order 13112 defines an invasive plant as an alien, non-native, species whose introduction causes or is likely to cause economic or environmental damage or harm to human health (U.S. Federal Register 1999). A noxious weed is any plant designated by a federal, state, or county government as injurious to public health, agriculture, recreation, wildlife or property.

Road construction and other ground-disturbing activities associated with construction, operation and maintenance of the Project could potentially allow noxious weed species to establish in new locations or for a pre-existing noxious weed location to increase in extent and/or density. Prevention, treatment, monitoring, and documentation measures, as described in this Plan, would reduce the probability of this occurring as a result of the TWE Project. This Plan describes the status of noxious weed species in the Project area, the regulatory agencies responsible for the control of noxious and invasive weeds, and steps that TransWest and its Construction Contractor(s) would take to prevent the establishment and spread of noxious weed species due to Project construction, operation and maintenance activities. In addition to providing updated information contained within this framework, the final Plan would include information on locations of weed problem areas within the Project footprint and proposed treatment methods as applicable.

N1.1 Plan Purpose

The purpose of this framework Plan is to describe and recommend methods for managing noxious weeds during and after construction of the TWE Project that would meet federal and state regulatory requirements and guidelines for noxious weed management. These methods are described in this Plan as follows: 1) plan purpose, goals, and timeline; 2) noxious weed management practices and agency requirements; 3) the use of herbicides; and 4) monitoring. This document provides a template for the final Plan to be developed by the Construction Contractor(s).

The focus of noxious weed control efforts is to prevent new infestations and to prevent existing infestations from expanding (as documented by pre-construction surveys) as a result of Project activities. TransWest is only responsible for the control of noxious weeds that are a result of construction-related, surface-disturbing activities. TransWest is not responsible for noxious weed species that occur adjacent to Project areas or for controlling or eradicating a species that was present prior to the Project. For example, Canada thistle (*Cirsium arvense*) is widespread across large portions of the Project area. Eradication of these infestations is not the responsibility of TransWest and would not be attempted, although containment would be the goal where required by state regulations.

Table N1 provides the best management practices (BMPs) and environmental mitigation measures (EMMs) identified in the Draft Environmental Impact Statement (DEIS) which may be applicable to this Plan. These BMPs and EMMs have not been finalized at this time and may be updated, changed, or eliminated as the Plan is further developed.

TABLE N1 APPLICABLE NOXIOUS WEED MANAGEMENT MEASURES IDENTIFIED IN DRAFT EIS

MEASURE CATEGORY	NOXIOUS WEED BMP, DESIGN FEATURES, AND STATE AND BLM FO-SPECIFIC STIPULATIONS, AND FOREST STANDARDS AND GUIDELINES
West-wide Energy Corridor	
General	GEN-1, GEN-3, GEN-7
Soils, Excavation, and Blasting	VEG-1
Vegetation Management, Pesticide and Herbicide Use	VEG-3, VEG-4
Mitigation and Monitoring	MIT-1
Public Health and Safety	PHS-4, PHS-7
Hazardous Materials and Wastewater Management	PHS-10, PHS-11, PHS-12, PHS-13
Hazardous Materials and Waste Management	PHS-14, PHS-15
Applicant Committed Environmental Protection Measures	
General Design Features (general, environmental training)	TWE-4
Project Design, Access, and Construction (site restoration and clean-up)	TWE-17
Groundwater, Surface Water, and Wetlands (water quality)	TWE-22
Vegetation and Soils Management (vegetation management and noxious weeds)	TWE-26
Ecological Resources (ecological, special status species and habitats)	TWE-33
Cultural Resources – Historic, Archeological, and Tribal Traditional (general, cultural)	TWE-37
Public Health and Safety (worker health and safety)	TWE-56
Hazardous Materials, Waste, and Wastewater Management (hazardous materials, waste management)	TWE-57, TWE-58, TWE-59, TWE-60, TWE-61, TWE-62
Fire Protection	TWE-64
Additional Mitigation Measures	
Vegetation	NX-1, NX-2, NX-3, NX-4
Aquatic Biological Resources	AB-3, AB-4
Recreation Resources	REC-1
Social and Economic Resources	SOCIO-3
Wyoming BLM Field Offices	
BLM Rawlins Field Office	OHV use limited to designated roads and vehicle routes.
Colorado BLM Field Offices	
BLM Little Snake Field Office	Developed recreation sites are NSU.
Utah National Forests	
Ashley NF	Only land application of approved herbicides to control noxious weeds would be allowed provided that herbicides are not allowed to contaminate surface water.

N1.2 Plan Updates

The Plan will be updated for the Record of Decision (ROD) Plan of Development (POD) based on the selected Agency Preferred Alternative, BMPs, and EMMs defined in the Final Environmental Impact Statement (FEIS), Biological Assessment (BA), Biological Opinion (BO), Biological Evaluation (BE), and through consultation with various state and federal agencies. Plan updates for the ROD POD may include: defined noxious weed areas, applicable mitigation, pre-construction requirements, and additional pre- and post-construction monitoring.

The Plan will be updated for the Notice to Proceed (NTP) POD based on the final engineering and design and results of pre-construction field surveys. The Construction Contractor will be responsible for preparing and implementing the final Plan.

N1.3 Goals

The goals of this Plan are to: 1) prevent the spread of existing noxious weeds; and 2) avoid noxious weed invasion into new sites during and following construction of the TWE Project. This would be accomplished by executing agency requirements to:

- Prevent and manage the spread of noxious weeds;
- Implement weed control measures for the TWE Project;
- Use herbicides safely; and
- Monitor noxious weed management effectiveness.

Information gathered during pre-construction surveys and provided by the Bureau of Land Management (BLM) may be used to monitor and control the spread of noxious weeds on the TWE Project right-of-way (ROW). Proposed noxious weed management measures are listed in this document along with relevant regulatory requirements.

N1.4 Agency Regulations

Federal and state agency regulations are presented in the following section. If any special management areas are crossed by the TWE Project, then additional requirements would be coordinated with the appropriate agency. In addition, Table N2 provides a list of jurisdictions, contacts, and weed management requirements for the TWE Project. Table N2 is incomplete at this time and will be filled in once the selected Agency Preferred Alternative has been identified.

TABLE N2 WEED PERSONNEL CONTACT INFORMATION AND COMMENTS PROVIDED BY AGENCY FOR THE TWE PROJECT

AGENCY	CONTACT/NUMBER	WEED MANAGEMENT REQUIREMENTS/REQUESTS	TYPE OF GIS DATA PROVIDED	COMMENTS
Wyoming				
BLM Wyoming State Office				
BLM Rawlins Field Office				
Wyoming State Weed and Pest Control Council				
Carbon County Weed and Pest Control District				
Sweetwater County Weed and Pest Control District				
NRCS Wyoming State Office				
Red-Rim-Daley SMA/ACEC				
BOR Wyoming State Office				
Colorado				
BLM Colorado State Office				
BLM Little Snake Field Office				
BLM White River Field Office				
Colorado Department of Agriculture				
Moffat County Noxious Weed Management Program				
NRCS Colorado State Office				
Dinosaur National Monument				
BOR Colorado State Office				
Utah				
BLM Utah State Office				
BLM Cedar City Field Office				
BLM Fillmore Field Office				
BLM Richfield Field Office				
BLM Salt Lake Field Office				
BLM Vernal Field Office				
BLM St. George Field Office				
Ashley National Forest				
Dixie National Forest				
Fishlake National Forest				
Manti La Sal National Forest				
Uinta National Forest				
Dinosaur National Monument				

AGENCY	CONTACT/NUMBER	WEED MANAGEMENT REQUIREMENTS/REQUESTS	TYPE OF GIS DATA PROVIDED	COMMENTS
Beaver Dam Slope ACEC				
Currant Creek WMA				
Dairy Fork WMA				
Iron County Agricultural Protection Areas				
Jackson WMA				
Lake Fork WMA				
Lears Canyon ACEC				
Little Sahara National Recreation Area				
Lower Green River Wild and Scenic River				
Lower Green River Corridor ACEC				
Mona Front WMA				
Rabbit Gulch WMA				
Red Creek WMA				
Sand Wash/Sink Draw Conservation Easement				
Spencer Fork WMA				
Starvation WMA				
Triangle Ranch WMA				
Wildcat WMA				
Utah Weed Control Association				
Utah Reclamation Mitigation and Conservation Commission				
County Weed Supervisor for Beaver County				
County Weed Supervisor for Duchesne County				
County Weed Supervisor for Iron County				
County Weed Supervisor for Juab County				
County Weed Supervisor for Millard County				
County Weed Supervisor for Sanpete County				
County Weed Supervisor for Uintah				

AGENCY	CONTACT/NUMBER	WEED MANAGEMENT REQUIREMENTS/REQUESTS	TYPE OF GIS DATA PROVIDED	COMMENTS
County				
County Weed Supervisor for Utah County				
County Weed Supervisor for Wasatch County				
County Weed Supervisor for Washington County				
Utah Department of Agriculture and Food				
NRCS Utah State Office				
BOR Utah State Office				
Nevada				
BLM Nevada State Office				
BLM Ely Field Office				
BLM Las Vegas Field Office				
Beaver Dam Slope ACEC				
Clark County Wetlands Park				
Clover Mountains Wilderness Area				
Las Vegas Valley SRMA				
Mormon Mesa ACEC				
Mormon Mesa ACEC				
Muddy Mountains SRMA				
Nelson/Eldorado SRMA				
Rainbow Gardens ACEC				
River Mountains ACEC				
Sunrise Mountain ISA				
Sunrise Mountain SRMA				
Clark County Weed Management Area				
Lincoln County Weed Management Area				
NRCS Nevada State Office				
Nevada Department of Agriculture				
BOR Nevada State Office				

N1.4.1 All Lands

Relevant regulations applicable to all lands include:

- Noxious Weed Act of 1974 -- Public Law 93-629 (7 United States Code [U.S.C.] §2801 et seq.; 88 Stat. 2148)
- U.S. Environmental Protection Agency (EPA) Federal Insecticide, Fungicide, and Rodenticide Act (FIFRA; 7 Code of Federal Regulations [CFR] Part 136, 40 CFR Parts 140-189)
- Clean Water Act (CWA) Sections 303(d) and 404
- Endangered Species Act (ESA) of 1973, as amended Section 7(a)(2)
- U.S. Department of Agriculture (USDA) State Noxious-Weed Seed Requirements Recognized in the Administration of the Federal Seed Act – 7 CFR Part 201 (USDA 2011)
- Noxious Weed Control and Eradication Act of 2004, 7 U.S.C. §§7781-7786, Subtitle E
- Plant Protection Act of 2000, 7 U.S.C. §7701 *et* seq. (supersedes the Federal Executive Order 13112 of February 3, 1999, on Invasive Species)
- National Invasive Species Act of 1996, 16 U.S.C. § 4701
- Nonindigenous Aquatic Nuisance Prevention and Control Act of 1990, 16 U.S.C. §4701

N1.4.2 Bureau of Land Management

Relevant regulations applicable to BLM lands include:

- Federal Land Policy and Management Act (FLPMA) Sec. 101(a)(8)
- U.S. Department of Interior (USDOI) Manual 517 DM 1—Integrated Pest Management Policy (USDOI 2007)
- Final Vegetation Treatments Using Herbicides Programmatic EIS (BLM 2007)
- BLM Integrated Vegetation Management Handbook H1740-2 (BLM 2008)
- BLM Terms and Conditions of Right-of-Way Grants and Temporary Use Permits 43 CFR 2881.2
- BLM Field Office Resource Management Plans

N1.4.3 United States Forest Service

Relevant regulations applicable to U.S. Forest Service (USFS) lands include:

- FLPMA Sec. 101(a)(8)
- Forest Service Handbook 2109.14 (USFS 1994)

- Forest Service Manual 2000 Zero Code 2080 – Servicewide and Region 4 (USFS 2001, 2011a)
- Forest Service Manual 2000 Zero Code 2150 - Servicewide, Regions 2 & 4, and Uinta National Forest (USFS 1988, 2003, 2012, 2013a)
- Forest Service Manual 2000 Zero Code 2900 – Servicewide (USFS 2011b)
- National Forest Resource Management Plans

N1.4.4 National Park Service

Relevant regulations applicable to National Park Service (NPS) lands include:

- FLPMA Sec. 101(a)(8)
- USDOI Manual 517 DM 1—Integrated Pest Management Policy (USDOI 2007)
- National Park Service Director's Order 77-7 Natural Resource Protection—Integrated Pest Management
- National Park Service Resource Management Plans

N1.4.5 Bureau of Reclamation

Relevant regulations applicable to Bureau of Reclamation (Reclamation) lands include:

- FLPMA Sec. 101(a)(8)
- USDOI Manual 517 DM 1—Integrated Pest Management Policy (USDOI 2007)

N1.4.6 Utah Reclamation Mitigation and Conservation Commission

Relevant regulations applicable to Utah Reclamation Mitigation and Conservation Commission (URMCC) lands include:

- FLPMA Sec. 101(a)(8)
- US Department of Interior Department Manual 517 DM 1—Integrated Pest Management Policy (USDOI 2007)

N1.4.7 State of Colorado

Relevant regulations applicable to State of Colorado lands include:

- Colorado Noxious Weed Act (Title 35, Article 5.5, Sections 35-5.5-104.5 to 35-5.5-118)
- Colorado Pesticide Act, Title 35, Article 9, Section 35-9-118
- Colorado Code of Regulations (CCR) 8 CCR 1206-2

N1.4.8 State of Nevada

Relevant regulations applicable to State of Nevada lands include:

- Nevada Revised Statutes: Chapter 555.005-555.5570 —Control of Insects, Pests, and Noxious Weeds

N1.4.9 State of Utah

Relevant regulations applicable to State of Utah lands include:

- Utah Noxious Weed Act (Rule R68-9, Title 4, Chapter 17, Sections 1 to 11)
- Utah Pesticide Control Act (Rule R68-7, Title 4, Chapter 14, Sections 1 to 13)
- County Weed Supervisors from Beaver, Duchesne, Iron, Juab, Millard, Sanpete, Uintah, Utah, Wasatch, and Washington counties

N1.4.10 State of Wyoming

Relevant regulations applicable to State of Wyoming lands include:

- Wyoming Weed and Pest Control Act of 1973 (Title 11, Chapter 5, Section 11-5-101 to 11-5-406)
- Wyoming Environmental Pesticide Control Act of 1973 (Title 35, Chapter 7, Section 35-7-350 to 35-7-376)
- Carbon County Declared List (Carbon County 2013)
- County Weed and Pest Control Districts in Carbon and Sweetwater counties

N1.5 Timeline

TransWest may be required to treat noxious weeds within the ROW, access roads, and all other areas disturbed during construction, operation and maintenance of the TWE Project. The schedule and timing of such treatments will be determined during the National Environmental Policy Act (NEPA) review process and set forth as conditions of approval in the ROW grants or special use authorizations.

N1.6 Responsible Parties

TransWest will have the overall responsibility of directing and monitoring noxious weed management efforts for the TWE Project. The Construction Contractor(s) may retain the services of a company who specializes in noxious weed management to implement the protocols identified in this Plan during and following construction. It is anticipated that post-construction noxious weed monitoring would occur concurrently with the practices outlined in the Reclamation Plan (Appendix Q), as appropriate.

N2.0 NOXIOUS WEED MANAGEMENT PLAN

N2.1 State- and County-Listed Noxious Weeds

Tables N3 through N6 contain a list of all listed federal, state, and county noxious weed species for all Project states and identifies whether they are known or expected to occur within the Project area based on their recorded presence in the counties where the TWE Project is located. The BLM and USFS use the most current federal and state noxious weed lists for managing weeds on federal lands.

TABLE N3 COLORADO NOXIOUS WEEDS AND POTENTIAL FOR OCCURRENCE IN COLORADO PROJECT COUNTY (MOFFAT)

SPECIES NAME[1]	FEDERAL NOXIOUS STATUS[2]	COLORADO NOXIOUS STATUS[3]	PRESENCE IN COLORADO PROJECT COUNTY[4,5]	REGIONS IN WHICH KNOWN TO PROJECT COUNTY(S)[4,5,6,7,8]	MANAGEMENT TECHNIQUES PERMITTED AND REQUIRED BY COLORADO NOXIOUS WEED ACT
Velvetleaf (*Abutilon theophrasti*)	-	C	-	2 & 3	Elimination not required
Hardheads, Russian knapweed (*Acroptilon repens*)	-	B	Moffat	1, 2, 3, & 4	Herbicides approved by Commissioner and mowing, or other mechanical techniques recommended by Commissioner
Jointed goatgrass (*Aegilops cylindrica*)	-	B	-	2 & 3	Elimination required, but no specific techniques specified
Camelthorn (*Alhagi maurorum*)	-	A	-	3 & 4	Herbicides approved by Commissioner and digging, or other mechanical techniques recommended by Commissioner
Common bugloss (*Anchusa officinalis*)	-	Watch	-	2 & 3	Elimination not required
Crested anoda (*Anoda cristata*)	-	B	-	Not known	Herbicides approved by Commissioner and hand-pulling, digging, sawing, or other mechanical techniques recommended by Commissioner
Corn chamomile (*Anthemis arvensis*)	-	B	-	Not known	Herbicides approved by Commissioner and hand-pulling, digging, or other mechanical techniques recommended by Commissioner
Stinking chamomile (*Anthemis cotula*)	-	B	-	2	Herbicides approved by Commissioner and hand-pulling, digging, or other mechanical techniques recommended by Commissioner
Lesser burdock (*Arctium minus*)	-	C	Moffat	1, 2, 3, & 4	Elimination not required
Absinthium (*Artemisia absinthium*)	-	B	-	1, 2, & 3	Herbicides approved by Commissioner and hand-pulling, digging, or other mechanical techniques recommended by Commissioner
Giant reed (*Arundo donax*)	-	A	-	2, 3, & 4	Herbicides approved by Commissioner and hand-pulling, digging, or other mechanical techniques recommended by Commissioner
Onionweed (*Asphodelus fistulosus*)	Noxious – Terrestrial	Watch	-	Not known	
Elongated mustard (*Brassica elongata*)	-	A	-	Not known	Herbicides approved by Commissioner and hand-pulling, digging, or other mechanical techniques recommended by Commissioner
Asian mustard (*Brassica tournefortii*)	-	Watch	-	2, 3, & 4	Elimination not required

SPECIES NAME[1]	FEDERAL NOXIOUS STATUS[2]	COLORADO NOXIOUS STATUS[3]	PRESENCE IN COLORADO PROJECT COUNTY[4,5]	REGIONS IN WHICH KNOWN TO PROJECT COUNTY(S)[4,5,6,7,8]	MANAGEMENT TECHNIQUES PERMITTED AND REQUIRED BY COLORADO NOXIOUS WEED ACT
Cheatgrass (*Bromus tectorum*)	-	C	Moffat	1, 2, 3, & 4	Elimination not required
White bryony (*Bryonia alba*)	-	Watch	-	2	Elimination not required
Flowering rush (*Butomus umbellatus*)	-	Watch	-	Not known	Elimination not required
Whitetop (*Cardaria draba, Cardaria* spp.)	-	B	Moffat	1, 2, 3, & 4	Herbicides approved by Commissioner and hand-pulling, digging, or other mechanical techniques recommended by Commissioner
Spiny plumeless thistle (*Carduus acanthoides*)	-	B	Moffat	1 & 2	Herbicides approved by Commissioner and hand-pulling, digging, or other mechanical techniques recommended by Commissioner
Nodding plumeless thistle, musk thistle (*Carduus nutans*)	-	B	Moffat	1, 2, 3, & 4	Herbicides approved by Commissioner and hand-pulling, digging, or other mechanical techniques recommended by Commissioner
Woolly distaff thistle (*Carthamus lanatus*)	-	Watch	-	Not known	Elimination not required
Caraway (*Carum carvi*)	-	B	-	1 & 2	Elimination required, but no specific techniques specified
Diffuse knapweed (*Centaurea diffusa*)	-	B	Moffat	1, 2, 3, & 4	Herbicides approved by Commissioner, hand-pulling, digging, or other mechanical techniques recommended by Commissioner
Tyrol knapweed (*Centaurea nigrescens*, SYN= *C. pratensis*)	-	A	-	Not known	Herbicides approved by Commissioner, hand-pulling, digging, or other mechanical techniques recommended by Commissioner
Yellow star-thistle (*Centaurea solstitialis*)	-	A	-	2 & 3	Herbicides approved by Commissioner and prescribed fire used with herbicide, hand-pulling, digging, or other mechanical techniques recommended by Commissioner
Squarrose knapweed (*Centaurea virgata*, SYN=*C. squarrosa*)	-	A	-	2 & 3	Herbicides approved by Commissioner and prescribed fire used with herbicide, hand-pulling, digging, or other mechanical techniques recommended by Commissioner
Spotted knapweed (*Centaurea stoebe* ssp. *micranthos*, SYN=*C. maculosa*)	-	B	Moffat	1, 2, 3, & 4	Herbicides approved by Commissioner and hand-pulling, digging, or other mechanical techniques recommended by Commissioner

SPECIES NAME[1]	FEDERAL NOXIOUS STATUS[2]	COLORADO NOXIOUS STATUS[3]	PRESENCE IN COLORADO PROJECT COUNTY[4,5]	REGIONS IN WHICH KNOWN TO PROJECT COUNTY(S)[4,5,6,7,8]	MANAGEMENT TECHNIQUES PERMITTED AND REQUIRED BY COLORADO NOXIOUS WEED ACT
Rush skeletonweed (*Chondrilla juncea*)	-	A	-	Not known	Herbicides approved by Commissioner and hand-pulling, digging, or other mechanical techniques recommended by Commissioner
Chicory (*Cichorium intybus*)	-	C	-	2 & 3	Elimination not required
Canada thistle (*Cirsium arvense*)	-	B	Moffat	1, 2, 3, & 4	Elimination not required
Bull thistle (*Cirsium vulgare*)	-	B	Moffat	1, 2, & 3	Herbicides approved by Commissioner and hand-pulling, digging, or other mechanical techniques recommended by Commissioner
Oriental virginsbower (*Clematis orientalis*)	-	B	Moffat	1, 2, & 3	Herbicides approved by Commissioner and digging, or other mechanical techniques recommended by Commissioner
Poison hemlock (*Conium maculatum*)	-	C	-	1, 2, & 3	Elimination not required
Field bindweed (*Convolvulus arvensis*)	-	C	Moffat	1, 2, 3, & 4	Elimination not required
Purple pampas grass (*Cortaderia jubata*)	-	Watch	-	Not known	Elimination not required
Common crupina (*Crupina vulgaris*)	Noxious – Terrestrial	A	-	Not known	Herbicides approved by Commissioner and hand-pulling, digging, or other mechanical techniques recommended by Commissioner
Dodder (*Cuscuta* spp. – except for natives)	Noxious – Parasitic	-	-	1, 2, 3, & 4	Elimination not required
Gypsyflower, houndstongue (*Cynoglossum officinale*)	-	B	Moffat	1, 2, & 3	Herbicides approved by Commissioner and hand-pulling, digging, or other mechanical techniques recommended by Commissioner
Yellow nutsedge (*Cyperus esculentus*)	-	B	-	2	Elimination not required
Scotch broom (*Cytisus scoparius*)	-	Watch	-	Not known	Elimination not required
Fuller's teasel (*Dipsacus fullonum*)	-	B	-	2	Elimination required, but no specific techniques specified
Cutleaf teasel (*Dipsacus laciniatus*)	-	B	-	Not known	Elimination required, but no specific techniques specified

SPECIES NAME[1]	FEDERAL NOXIOUS STATUS[2]	COLORADO NOXIOUS STATUS[3]	PRESENCE IN COLORADO PROJECT COUNTY[4,5]	REGIONS IN WHICH KNOWN TO PROJECT COUNTY(S)[4,5,6,7,8]	MANAGEMENT TECHNIQUES PERMITTED AND REQUIRED BY COLORADO NOXIOUS WEED ACT
Common water hyacinth (*Eichhornia crassipes*)	-	Watch	-	Not known	Elimination not required
Russian olive (*Elaeagnus angustifolia*)	-	B	Moffat	1, 2, 3, & 4	Elimination not required
Quackgrass (*Elymus repens*)	-	B	Moffat	1, 2, & 3	Elimination not required
Codlins and cream, hairy wouldow-herb (*Epilobium hirsutum*)	-	Watch	-	Not known	Elimination not required
Redstem stork's bill (*Erodium cicutarium*)	-	C	Moffat	1, 2, 3, & 4	Elimination not required
Cypress spurge (*Euphorbia cyparissias*)	-	A	-	1 & 2	Herbicides approved by Commissioner and hand-pulling, digging, or other mechanical techniques recommended by Commissioner
Leafy spurge (*Euphorbia esula*)	-	B	Moffat	1, 2, & 3	Herbicides approved by Commissioner and digging, or other mechanical techniques recommended by Commissioner
Myrtle spurge (*Euphorbia myrsinites*)	-	A	-	2 & 3	Herbicides approved by Commissioner and hand-pulling, digging, or other mechanical techniques recommended by Commissioner
Baby's breath (*Gypsophila paniculata*)	-	Watch	Moffat	1, 2, & 3	Elimination not required
Saltlover (*Halogeton glomeratus*)	-	C	Moffat	1, 2, 3, & 4	Elimination not required
Dames rocket (*Hesperis matronalis*)	-	B	Moffat	1, 2, & 3	Elimination required, but no specific techniques specified
Flower of an hour, Venice mallow (*Hibiscus trionum*)	-	B	-	2 & 3	Herbicides approved by Commissioner and hand-pulling, digging, sawing, or other mechanical techniques recommended by Commissioner
Orange hawkweed (*Hieracium aurantiacum*)	-	A	-	Not known	Herbicides approved by Commissioner
Meadow hawkweed (*Hieracium caespitosum*)	-	Watch	-	Not known	Elimination not required
Waterthyme (*Hydrilla verticillata*)	Noxious – Aquatic	A	-	Not known	Herbicides approved by Commissioner and water drawdown (controlled water drainage), and hand-removal, or other mechanical techniques recommended by Commissioner

SPECIES NAME[1]	FEDERAL NOXIOUS STATUS[2]	COLORADO NOXIOUS STATUS[3]	PRESENCE IN COLORADO PROJECT COUNTY[4,5]	REGIONS IN WHICH KNOWN TO PROJECT COUNTY(S)[4,5,6,7,8]	MANAGEMENT TECHNIQUES PERMITTED AND REQUIRED BY COLORADO NOXIOUS WEED ACT
Black henbane (*Hyoscyamus niger*)	-	B	Moffat	1, 2, & 3	Herbicides approved by Commissioner and hand-pulling, digging, or other mechanical techniques recommended by Commissioner
Common St. Johnswort (*Hypericum perforatum*)	-	C	-	Not known	Elimination not required
Cogongrass, Japanese blood grass (*Imperata cylindrica*)	Noxious – Terrestrial	Watch	-	Not known	Elimination not required
Dyer's woad (*Isatis tinctoria*)	-	A	-	1, 2, & 3	Herbicides approved by Commissioner and hand-pulling, digging, or other mechanical techniques recommended by Commissioner
Broadleaved pepperweed (*Lepidium latifolium*)	-	B	Moffat	1, 2, 3, & 4	Herbicides approved by Commissioner
Sericea lespedeza (*Lespedeza cuneata*)	-	Watch	-	Not known	Elimination not required
Oxeye daisy (*Leucanthemum vulgare*, SYN=*Chrysanthemum leucanthemum*)	-	B	Moffat	1 & 2	Herbicides approved by Commissioner and hand-pulling, digging, or other mechanical techniques recommended by Commissioner
Dalmation toadflax (*Linaria dalmatica*)	-	B	Moffat	1, 2, & 3	Herbicides approved by Commissioner and hand-pulling, digging, or other mechanical techniques recommended by Commissioner
Broomleaf toadflax (*Linaria genistifolia*)	-	B	-	2 & 3	Herbicides approved by Commissioner and hand-pulling, digging, or other mechanical techniques recommended by Commissioner
Butter and eggs, yellow toadflax (*Linaria vulgaris*)	-	B	Moffat	1, 2, & 3	Herbicides approved by Commissioner
Purple loosestrife (*Lythrum salicaria* and cultivars)	-	A	-	2, 3, & 4	Herbicides approved by Commissioner and hand-pulling, digging, or other mechanical techniques recommended by Commissioner
Eurasian watermilfoil (*Myriophyllum spicatum*)	-	B	-	1, 2, & 3	Herbicides approved by Commissioner and hand-pulling, or other mechanical techniques recommended by Commissioner
Scotch cottonthistle (*Onopordum acanthium*)	-	B	-	1, 2, 3, & 4	Herbicides approved by Commissioner and hand-pulling, digging, or other mechanical techniques recommended by

SPECIES NAME[1]	FEDERAL NOXIOUS STATUS[2]	COLORADO NOXIOUS STATUS[3]	PRESENCE IN COLORADO PROJECT COUNTY[4,5]	REGIONS IN WHICH KNOWN TO PROJECT COUNTY(S)[4,5,6,7,8]	MANAGEMENT TECHNIQUES PERMITTED AND REQUIRED BY COLORADO NOXIOUS WEED ACT
					Commissioner
Bull cottonthistle (*Onopordum tauricum*)	-	B	-	Not known	Herbicides approved by Commissioner and hand-pulling, digging, or other mechanical techniques recommended by Commissioner
Broomrape (*Orobanche* spp. – except for natives)	Noxious – Parasitic	-	Moffat	1, 2, 3, & 4	Elimination not required
Proso millet (*Panicum miliaceum*)	-	C	-	1, 2, 3, & 4	Elimination not required
Harmal peganum, African rue (*Peganum harmala*)	-	A	-	3 & 4	Herbicides approved by Commissioner and digging, or other mechanical techniques recommended by Commissioner
Common reed (*Phragmites australis*)	-	Watch	Moffat	1, 2, 3, & 4	Elimination not required
Water lettuce (*Pistia stratiotes*)	-	Watch	-	Not known	Elimination not required
Bulbous bluegrass (*Poa bulbosa*)	-	C	Moffat	1, 2, & 3	Elimination not required
Bohemium knotweed (*Polygonum x bohemicum*)	-	A	-	Not known	Herbicides approved by Commissioner and hand-pulling, digging, or other mechanical techniques recommended by Commissioner
Japanese knotweed (*Polygonum cuspidatum*)	-	A	-	1 & 2	Herbicides approved by Commissioner and hand-pulling, digging, or other mechanical techniques recommended by Commissioner
Giant knotweed (*Polygonum sachalinense*)	-	A	-	Not known	Herbicides approved by Commissioner and hand-pulling, digging, or other mechanical techniques recommended by Commissioner
Sulphur cinquefoil (*Potentilla recta*)	-	B	-	2 & 3	Herbicides approved by Commissioner and hand-pulling, digging, or other mechanical techniques recommended by Commissioner
Himalayan blackberry (*Rubus armeniacus*)	-	Watch	-	2, 3, & 4	Elimination not required
Mediterranean sage (*Salvia aethiopis*)	-	A	-	3 & 4	Herbicides approved by Commissioner and digging, or other mechanical techniques recommended by Commissioner

SPECIES NAME[1]	FEDERAL NOXIOUS STATUS[2]	COLORADO NOXIOUS STATUS[3]	PRESENCE IN COLORADO PROJECT COUNTY[4,5]	REGIONS IN WHICH KNOWN TO PROJECT COUNTY(S)[4,5,6,7,8]	MANAGEMENT TECHNIQUES PERMITTED AND REQUIRED BY COLORADO NOXIOUS WEED ACT
Kariba-weed, giant salvinia (*Salvinia molesta*)	Noxious – Aquatic	A	-	Not known	Herbicides approved by Commissioner and water drawdown (controlled water drainage), and hand-removal, or other mechanical techniques recommended by Commissioner
Bouncingbet (*Saponaria officinalis*)	-	B	-	2 & 3	Elimination required, but no specific techniques specified
Stinking wouldie, tansy ragwort (*Senecio jacobaea*)	-	A	-	Not known	Herbicides approved by Commissioner, hand-pulling, digging, or other mechanical techniques recommended by Commissioner
Field sowthistle (*Sonchus arvensis*)	-	C	Moffat	1, 2, & 3	Elimination not required
Johnson grass (*Sorghum halepense*) and all other perennial *Sorghum* spp.	-	C	-	2, 3, & 4	Elimination not required
Alkali swainsonpea (*Sphaerophysa salsula*)	-	Watch	-	1 & 2	Elimination not required
Medusahead (*Taeniatherum caput-medusae*)	-	A	-	2	Herbicides approved by Commissioner and prescribed fire used with herbicide, hand-pulling, digging, or other mechanical techniques recommended by Commissioner
Tamarisk, salt cedar (*Tamarix* spp.)	-	B	Moffat	1, 2, 3, & 4	Herbicides approved by Commissioner and sawing, digging, or other mechanical techniques recommended by Commissioner
Common tansy (*Tanacetum vulgare*)	-	B	-	1, 2, & 3	Elimination required, but no specific techniques specified
Puncturevine (*Tribulus terrestris*)	-	C	-	2, 3, & 4	Elimination not required
Scentless false mayweed (*Tripleurospermum perforatum*, SYN=*Matricaria perforata*)	-	B	-	1, 2, & 3	Herbicides approved by Commissioner and hand-pulling, digging, or other mechanical techniques recommended by Commissioner
Moth mullein (*Verbascum blattaria*)	-	B	-	2	Elimination required, but no specific techniques specified
Common mullein (*Verbascum thapsus*)	-	C	Moffat	1, 2, 3, & 4	Elimination not required

SPECIES NAME[1]	FEDERAL NOXIOUS STATUS[2]	COLORADO NOXIOUS STATUS[3]	PRESENCE IN COLORADO PROJECT COUNTY[4,5]	REGIONS IN WHICH KNOWN TO PROJECT COUNTY(S)[4,5,6,7,8]	MANAGEMENT TECHNIQUES PERMITTED AND REQUIRED BY COLORADO NOXIOUS WEED ACT
Spiny cocklebur (*Xanthium spinosum*)	-	Watch	-	Not known	Elimination not required
Syrian beancaper (*Zygophyllum fabago*)	-	Watch	-	Not known	Elimination not required

Sources:
[1]Species common and scientific name is from the USDA Plants Database (2013). If a synonymous name is used by a state for designating noxious status and is substantially different from the USDA Plants Database name, then these names are listed after the USDA Plants Database name.
[2]APHIS (2010)
[3]The following weeds are officially designated by the State of Colorado. List A: Designated by the Commissioner for eradication. List B: Species for which the Commissioner, in consultation with the state noxious weed advisory committee, local governments, and other interested parties, develops and implements state noxious weed management plans designed to stop the continued spread of these species. List C: Species for which the Commissioner, in consultation with the state noxious weed advisory committee, local governments, and other interested parties, would develop and implement state noxious weed management plans designed to support the efforts of local governing bodies to facilitate more effective integrated weed management on private and public lands. The goal of such plans would not be to stop the continued spread of these species but to provide additional education, research, and biological control resources to jurisdictions that choose to require management of List C species. Watch List: Determined to pose a potential threat to the agricultural productivity and environmental values of the lands of the state. The Watch List is intended to serve advisory and educational purposes only. Its purpose is to encourage the identification and reporting of these species to the Commissioner in order to facilitate the collection of information to assist the Commissioner in determining which species should be designated as noxious weeds (Colorado Department of Agriculture 2013a,b).
[4]Consortium of Intermountain Herbaria and Southwestern Environmental Information Network (2013), USDA Plants Database (2013)
[5]Colorado Department of Agriculture (2013a)
[6]University of Nevada Cooperative Extension (2010)
[7]Utah State University Cooperative Extension (2009)
[8]INVADERS Database (Rice 2013), University of Wyoming Extension (2013)

TABLE N4 NEVADA NOXIOUS WEEDS AND POTENTIAL FOR OCCURRENCE IN NEVADA PROJECT COUNTIES (CLARK, LINCOLN)

SPECIES NAME[1]	FEDERAL NOXIOUS STATUS[2]	NEVADA NOXIOUS STATUS[3]	PRESENCE IN NEVADA PROJECT COUNTIES[4,6]	REGIONS IN WHICH KNOWN TO PROJECT COUNTY(S)[4,5,6,7,8]
Hardheads, Russian knapweed (*Acroptilon repens*)	-	B	Clark, Lincoln	1, 2, 3, & 4
Camelthorn (*Alhagi maurorum*)	-	A	Clark	3 & 4
Stinking chamomile (*Anthemis cotula*)	-	A	-	2
Giant reed (*Arundo donax*)	-	A	Clark	2, 3, & 4
Asian mustard (*Brassica tournefortii*)	-	B	Clark, Lincoln	2, 3, & 4
Whitetop (*Cardaria draba, Cardaria* spp.)	-	C	Clark, Lincoln	1, 2, 3, & 4
Nodding plumeless thistle, musk thistle (*Carduus nutans*)	-	B	Clark, Lincoln	1, 2, 3, & 4
Red star-thistle (*Centaurea calcitrapa*)	-	A	-	2 & 3
Diffuse knapweed (*Centaurea diffusa*)	-	B	Clark, Lincoln	1, 2, 3, & 4
Iberian knapweed (*Centaurea iberica*)	-	A	-	Not known
Maltese star-thistle (*Centaurea melitensis*)	-	A	Clark, Lincoln	2, 3, & 4
Yellow star-thistle (*Centaurea solstitialis*)	-	A	-	2 & 3
Squarrose knapweed (*Centaurea virgata*, SYN=*C. squarrosa*)	-	A	-	2 & 3
Spotted knapweed (*Centaurea stoebe* ssp. *micranthos*, SYN=*C. maculosa*)	-	A	Clark, Lincoln	1, 2, 3, & 4
Rush skeletonweed (*Chondrilla juncea*)	-	A	-	Not known
Spotted water hemlock (*Cicuta maculata*)	-	C	Lincoln	1, 2, & 3
Canada thistle (*Cirsium arvense*)	-	C	Clark, Lincoln	1, 2, 3, & 4
Poison hemlock (*Conium maculatum*)	-	C	Lincoln	1, 2, & 3
Common crupina (*Crupina vulgaris*)	Noxious – Terrestrial	A	-	Not known
Dodder (*Cuscuta* spp. – except for natives)	Noxious – Parasitic	-	Clark, Lincoln	1, 2, 3, & 4
Gypsyflower, Houndstongue (*Cynoglossum officinale*)	-	A	Lincoln	1, 2, & 3
Leafy spurge (*Euphorbia esula*)	-	B	-	1, 2, & 3

SPECIES NAME[1]	FEDERAL NOXIOUS STATUS[2]	NEVADA NOXIOUS STATUS[3]	PRESENCE IN NEVADA PROJECT COUNTIES[4,6]	REGIONS IN WHICH KNOWN TO PROJECT COUNTY(S)[4,5,6,7,8]
Professor-weed, goats rue (*Galega officinalis*)	Noxious – Terrestrial	A	-	Not known
Waterthyme (*Hydrilla verticillata*)	Noxious – Aquatic	A	-	Not known
Black henbane (*Hyoscyamus niger*)	-	A	Lincoln	1, 2, & 3
Common St. Johnswort (*Hypericum perforatum*)	-	A	-	Not known
Dyer's woad (*Isatis tinctoria*)	-	A	-	1, 2, & 3
Broadleaved pepperweed (*Lepidium latifolium*)	-	C	Clark, Lincoln	1, 2, 3, & 4
Dalmation toadflax (*Linaria dalmatica*)	-	A	Lincoln	1, 2, & 3
Butter and eggs, yellow toadflax (*Linaria vulgaris*)	-	A	-	1, 2, & 3
Purple loosestrife (*Lythrum salicaria* and cultivars)	-	A	Clark	2, 3, & 4
European wand loosestrife (*Lythrum virgatum* and cultivars)	-	A	-	Not known
Eurasian watermilfoil (*Myriophyllum spicatum*)	-	A	-	1, 2, & 3
Scotch cottonthistle (*Onopordum acanthium*)	-	B	Clark, Lincoln	1, 2, 3, & 4
Broomrape (*Orobanche* spp. – except for natives)	Noxious – Parasitic	-	Clark, Lincoln	1, 2, 3, & 4
Harmal peganum, African rue (*Peganum harmala*)	-	A	Clark	3 & 4
Crimson fountaingrass (*Pennisetum setaceum*)	-	A	Clark	3 & 4
Sulphur cinquefoil (*Potentilla recta*)	-	A	-	2 & 3
Austrian yellowcress (*Rorippa austriaca*)	-	A	-	Not known
Mediterranean sage (*Salvia aethiopis*)	-	A	Clark	3 & 4
Kariba-weed, giant salvinia (*Salvinia molesta*)	Noxious – Aquatic	A	-	Not known
Carolina horsenettle (*Solanum carolinense*)	-	B	-	Not known
Silverleaf nightshade (*Solanum elaeagnifolium*)	-	B	Clark, Lincoln	2, 3, & 4
Field sowthistle (*Sonchus arvensis*)	-	A	Lincoln	1, 2, & 3
Johnson grass (*Sorghum halepense*) and all other perennial *Sorghum* spp.	-	C	Clark, Lincoln	2, 3, & 4
Alkali swainsonpea (*Sphaerophysa salsula*)	-	A	-	1 & 2

SPECIES NAME[1]	FEDERAL NOXIOUS STATUS[2]	NEVADA NOXIOUS STATUS[3]	PRESENCE IN NEVADA PROJECT COUNTIES[4,6]	REGIONS IN WHICH KNOWN TO PROJECT COUNTY(S)[4,5,6,7,8]
Medusahead (*Taeniatherum caput-medusae*)	-	B	-	2
Tamarisk, salt cedar (*Tamarix* spp.)	-	C	Clark, Lincoln	1, 2, 3, & 4
Puncturevine (*Tribulus terrestris*)	-	C	Clark, Lincoln	2, 3, & 4
Syrian beancaper (*Zygophyllum fabago*)	-	A	-	Not known

Sources:
[1]Species common and scientific name is from the USDA Plants Database (2013). If a synonymous name is used by a state for designating noxious status and is substantially different from the USDA Plants Database name, then these names are listed after the USDA Plants Database name.
[2]APHIS (2010)
[3]Officially designated and published as noxious by the State of Nevada (State of Nevada Department of Agriculture 2012). Category A: Noxious weeds that are generally not found or that are limited in distribution throughout the State. Category B: Noxious weeds that are generally established in scattered populations in some counties of the State. Category C Weeds: Noxious weeds that are generally established and generally widespread in many counties of the State.
[4]Consortium of Intermountain Herbaria and Southwestern Environmental Information Network (2013), USDA Plants Database (2013)
[5]Colorado Department of Agriculture (2013a)
[6]University of Nevada Cooperative Extension (2010)
[7]Utah State University Cooperative Extension (2009)
[8]INVADERS Database (Rice 2013), University of Wyoming Extension (2013)

TABLE N5 UTAH NOXIOUS WEEDS AND POTENTIAL FOR OCCURRENCE IN UTAH PROJECT COUNTIES

SPECIES NAME[1]	FEDERAL NOXIOUS STATUS[2]	UTAH NOXIOUS STATUS[3]	PRESENCE IN UTAH PROJECT COUNTIES[4,7]	REGIONS IN WHICH KNOWN TO PROJECT COUNTY(S)[4,5,6,7,8]
Hardheads, Russian knapweed (*Acroptilon repens*)	-	B	All project counties	1, 2, 3, & 4
Whorled milkweed (*Asclepias verticillata*)	-	X-County (Iron & Washington)	-	-
Whitetop (*Cardaria draba, Cardaria* spp.)	-	B	All project counties	1, 2, 3, & 4
Nodding plumeless thistle, musk thistle (*Carduus nutans*)	-	B	All project counties	1, 2, 3, & 4
Diffuse knapweed (*Centaurea diffusa*)	-	A	Beaver, Iron, Juab, Uintah, Utah	1, 2, 3, & 4
Yellow star-thistle (*Centaurea solstitialis*)	-	A	Utah, Wasatch, Washington	2 & 3
Squarrose knapweed (*Centaurea virgata*, SYN=*C. squarrosa*)	-	B	Juab, Millard, Sanpete, Utah, Wasatch, Washington	2 & 3
Spotted knapweed (*Centaurea stoebe* ssp. *micranthos*, SYN=*C. maculosa*)	-	A	All project counties	1, 2, 3, & 4

SPECIES NAME[1]	FEDERAL NOXIOUS STATUS[2]	UTAH NOXIOUS STATUS[3]	PRESENCE IN UTAH PROJECT COUNTIES[4,7]	REGIONS IN WHICH KNOWN TO PROJECT COUNTY(S)[4,5,6,7,8]
Crossflower, blue flowering mustard (*Chorsipora tenella*)	-	X-County (Juab)	All project counties	1, 2, 3, & 4
Spotted water hemlock (*Cicuta maculata*)	-	X-County (Duchesne)	Beaver, Duchesne, Juab, Millard, Sanpete, Uintah, Utah, Wasatch, Washington	1, 2, & 3
Canada thistle (*Cirsium arvense*)	-	C	All project counties	1, 2, 3, & 4
Bull thistle (*Cirsium vulgare*)	-	X-County (Beaver & Iron)	All project counties	1, 2, & 3
Poison hemlock (*Conium maculatum*)	-	B	All project counties	1, 2, & 3
Field bindweed (*Convolvulus arvensis*)	-	C	All project counties	1, 2, 3, & 4
Dodder (*Cuscuta* spp. – except for natives)	Noxious – Parasitic	-	Duchesne, Iron, Millard, Sanpete, Uintah, Utah, Washington	1, 2, 3, & 4
Bermudagrass (*Cynodon dactylon*)	-	B (except not in Washington County)	Millard, Uintah, Utah, Washington	2, 3, & 4
Gypsyflower, Houndstongue (*Cynoglossum officinale*)	-	C	All project counties	1, 2, & 3
Russian olive (*Elaeagnus angustifolia*)	-	X-County (Duchesne & Uintah)	All project counties	1, 2, 3, & 4
Quackgrass (*Elymus repens*)	-	C	All project counties	1, 2, & 3
Leafy spurge (*Euphorbia esula*)	-	A	Duchesne, Juab, Millard, Sanpete, Uintah, Utah, Wasatch, Washington	1, 2, & 3
Black henbane (*Hyoscyamus niger*)	-	A	Beaver, Duchesne, Juab, Sanpete, Uintah, Utah, Wasatch	1, 2, & 3
Common St. Johnswort (*Hypericum perforatum*)	-	A	-	Not known
Dyer's woad (*Isatis tinctoria*)	-	B	All project counties	1, 2, & 3
Broadleaved pepperweed (*Lepidium latifolium*)	-	B	Beaver, Duchesne, Iron, Juab, Sanpete, Uintah, Utah, Wasatch, Washington	1, 2, 3, & 4
Oxeye daisy (*Leucanthemum vulgare*, SYN=*Chrysanthemum leucanthemum*)	-	A	Sanpete, Uintah, Utah, Wasatch	1 & 2
Dalmation toadflax (*Linaria dalmatica*)	-	B	Beaver, Uintah, Utah, Wasatch	1, 2, & 3
Butter and eggs, yellow toadflax (*Linaria vulgaris*)	-	A	Beaver, Duchesne, Millard, Sanpete, Utah, Wasatch	1, 2, & 3

SPECIES NAME[1]	FEDERAL NOXIOUS STATUS[2]	UTAH NOXIOUS STATUS[3]	PRESENCE IN UTAH PROJECT COUNTIES[4,7]	REGIONS IN WHICH KNOWN TO PROJECT COUNTY(S)[4,5,6,7,8]
Purple loosestrife (*Lythrum salicaria* and cultivars)	-	A	Juab, Millard, Uintah, Utah, Wasatch	2, 3, & 4
Scotch cottonthistle (*Onopordum acanthium*)	-	B	All project counties	1, 2, 3, & 4
Broomrape (*Orobanche* spp. – except for natives)	Noxious – Parasitic	-	All project counties	1, 2, 3, & 4
Common reed (*Phragmites australis*)	-	X-County (Utah)	Duchesne, Juab, Millard, Sanpete, Uintah, Utah, Washington	1, 2, 3, & 4
Sulphur cinquefoil (*Potentilla recta*)	-	A	Utah, Washington	2 & 3
Silverleaf nightshade (*Solanum elaeagnifolium*)	-	X-County (Washington)	Washington	2, 3, & 4
Johnson grass (*Sorghum halepense*) and all other perennial *Sorghum* spp.	-	A	Beaver, Juab, Sanpete, Uintah, Utah, Washington	2, 3, & 4
Medusahead (*Taeniatherum caput-medusae*)	-	A	Utah	2
Tamarisk, salt cedar (*Tamarix* spp.)	-	C	All project counties	1, 2, 3, & 4
Puncturevine (*Tribulus terrestris*)	-	X-County (Iron)	Duchesne, Millard, Uintah, Utah, Washington	2, 3, & 4

Sources:

[1]Species common and scientific name is from the USDA Plants Database (2013). If a synonymous name is used by a state for designating noxious status and is substantially different from the USDA Plants Database name, then these names are listed after the USDA Plants Database name.

[2]APHIS (2010)

[3]The following weeds are officially designated and published as noxious for the State of Utah, as per the authority vested in the Commissioner of Agriculture under Section 4-17-3, Utah Noxious Weed Act (Utah Department of Agriculture 2010). Class A Early Detection Rapid Response (EDRR): Early Detection Rapid Response (EDRR) Declared noxious weeds not native to the state of Utah that pose a serious threat to the state and should be considered as a very high priority. Class B (Control): Declared noxious weeds not native to the state of Utah, that pose a threat to the state and should be considered a high priority for control. Class C (Containment): Declared noxious weeds not native to the state of Utah that are widely spread but pose a threat to the agricultural industry and agricultural products with a focus on stopping expansion. There are additional noxious weeds designated by Project counties (Utah Department of Agriculture 2009).

[4]Consortium of Intermountain Herbaria and Southwestern Environmental Information Network (2013), USDA Plants Database (2013)

[5]Colorado Department of Agriculture (2013a)

[6]University of Nevada Cooperative Extension (2010)

[7]Utah State University Cooperative Extension (2009)

[8]INVADERS Database (Rice 2013), University of Wyoming Extension (2013)

TABLE N6 WYOMING NOXIOUS WEEDS AND POTENTIAL FOR OCCURRENCE IN WYOMING PROJECT COUNTIES (CARBON, SWEETWATER)

SPECIES NAME[1]	FEDERAL NOXIOUS STATUS[2]	WYOMING NOXIOUS STATUS[3]	PRESENCE IN WYOMING PROJECT COUNTIES[4,8]	REGIONS IN WHICH KNOWN TO PROJECT COUNTY(S)[4,5,6,7,8]
Hardheads, Russian knapweed (*Acroptilon repens*)	-	X	Carbon, Sweetwater	1, 2, 3, & 4
Skeletonleaf bur ragweed (*Ambrosia tomentosa*)	-	X	Carbon, Sweetwater	1 & 2
Lesser burdock (*Arctium minus*)	-	X	Carbon	1, 2, 3, & 4
Whitetop (*Cardaria draba, Cardaria* spp.)	-	X	Carbon, Sweetwater	1, 2, 3, & 4
Hairy whitetop (*Cardaria pubescens*)	-	X	Carbon, Sweetwater	1, 2, 3, & 4
Spiny plumeless thistle (*Carduus acanthoides*)	-	X	Carbon	1 & 2
Nodding plumeless thistle, musk thistle (*Carduus nutans*)	-	X	Carbon, Sweetwater	1, 2, 3, & 4
Diffuse knapweed (*Centaurea diffusa*)	-	X	Carbon, Sweetwater	1, 2, 3, & 4
Spotted knapweed (*Centaurea stoebe* ssp. *micranthos*, SYN=*C. maculosa*)	-	X	Carbon, Sweetwater	1, 2, 3, & 4
Canada thistle (*Cirsium arvense*)	-	X	Carbon, Sweetwater	1, 2, 3, & 4
Field bindweed (*Convolvulus arvensis*)	-	X	Carbon, Sweetwater	1, 2, 3, & 4
Dodder (*Cuscuta* spp. – except for natives)	Noxious – Parasitic	-	Carbon, Sweetwater	1, 2, 3, & 4
Gypsyflower, Houndstongue (*Cynoglossum officinale*)	-	X	Carbon, Sweetwater	1, 2, & 3
Geyer's larkspur (*Delphinium geyeri*)	-	X-County (Carbon)	Carbon, Sweetwater	1 & 2
Russian olive (*Elaeagnus angustifolia*)	-	X	Carbon, Sweetwater	1, 2, 3, & 4
Quackgrass (*Elymus repens*)	-	X	Carbon, Sweetwater	1, 2, & 3
Leafy spurge (*Euphorbia esula*)	-	X	Carbon, Sweetwater	1, 2, & 3
Saltlover (*Halogeton glomeratus*)	-	X-County (Carbon)	Carbon, Sweetwater	1, 2, 3, & 4
Black henbane (*Hyoscyamus niger*)	-	X-County (Carbon)	Carbon, Sweetwater	1, 2, & 3
Common St. Johnswort (*Hypericum perforatum*)	-	X	-	Not known
Dyer's woad (*Isatis tinctoria*)	-	X	Carbon, Sweetwater	1, 2, & 3

SPECIES NAME[1]	FEDERAL NOXIOUS STATUS[2]	WYOMING NOXIOUS STATUS[3]	PRESENCE IN WYOMING PROJECT COUNTIES[4,8]	REGIONS IN WHICH KNOWN TO PROJECT COUNTY(S)[4,5,6,7,8]
Broadleaved pepperweed (*Lepidium latifolium*)	-	X	Carbon, Sweetwater	1, 2, 3, & 4
Oxeye daisy (*Leucanthemum vulgare*, SYN=*Chrysanthemum leucanthemum*)	-	X	Carbon	1 & 2
Dalmation toadflax (*Linaria dalmatica*)	-	X	Carbon, Sweetwater	1, 2, & 3
Butter and eggs, yellow toadflax (*Linaria vulgaris*)	-	X	Carbon	1, 2, & 3
Wyeth's lupine (*Lupinus wyethii*)	-	X-County (Carbon)	Carbon	1 & 2
Purple loosestrife (*Lythrum salicaria* and cultivars)	-	X	-	2, 3, & 4
Scotch cottonthistle (*Onopordum acanthium*)	-	X	Carbon	1, 2, 3, & 4
Plains pricklypear (*Opuntia polyacantha*)	-	X-County (Carbon)	Carbon, Sweetwater	1, 2, 3, & 4
Broomrape (*Orobanche* spp. – except for natives)	Noxious – Parasitic	-	Carbon, Sweetwater	1, 2, 3, & 4
Field sowthistle (*Sonchus arvensis*)	-	X	Carbon, Sweetwater	1, 2, & 3
Tamarisk, salt cedar (*Tamarix* spp.)	-	X	Carbon, Sweetwater	1, 2, 3, & 4
Common tansy (*Tanacetum vulgare*)	-	X	Carbon	1, 2, & 3
Rough cocklebur (*Xanthium strumarium*)	-	X-County (Carbon)	Carbon, Sweetwater	1, 2, 3, & 4

Sources:

[1]Species common and scientific name is from the USDA Plants Database (2013). If a synonymous name is used by a state for designating noxious status and is substantially different from the USDA Plants Database name, then these names are listed after the USDA Plants Database name.

[2]APHIS (2010)

[3]The following weeds are officially designated and published as noxious for the State of Wyoming, per the Wyoming Weed and Pest Control Act Designated List (Designated Noxious Weeds .S. 11-5-102 (a)(xi) and Prohibited Noxious Weeds W.S. 11-12-104)(Wyoming Weed and Pest Council 2013). In Wyoming, 26 plant species are designated as noxious weeds under the authority of the Wyoming Weed and Pest Control Act of 1973 (Wyoming Weed and Pest Control 2013). Six additional noxious weeds are designated by Carbon County (Carbon County 2013). The State of Wyoming designates certain species as noxious weeds but does not further classify them.

[4]Consortium of Intermountain Herbaria and Southwestern Environmental Information Network (2013), USDA Plants Database (2013)

[5]Colorado Department of Agriculture (2013a)

[6]University of Nevada Cooperative Extension (2010)

[7]Utah State University Cooperative Extension (2009)

[8]INVADERS Database (Rice 2013), University of Wyoming Extension (2013)

N2.1.1 APHIS

Animal and Plant Health Inspection Services (APHIS) designates nine noxious weed species that either occur or have the potential to occur in Project states (APHIS 2010). These noxious weeds are designated under the authority of the Federal Noxious Weed Act, and require federal land management agencies to control such plants and complement cooperative agreements with state agencies.

N2.1.2 State of Wyoming

In Wyoming, 26 plant species are designated as noxious weeds under the authority of the Wyoming Weed and Pest Control Act (WWPC) of 1973 (WWPC 2013). The State of Wyoming designates certain species as noxious weeds but does not further classify them. Six additional noxious weeds are designated by Carbon County (Carbon County 2013).

N2.1.3 State of Colorado

In Colorado, a total of 76 plant species are designated as noxious weeds under the authority of the Colorado Noxious Weed Act (Colorado Department of Agriculture 2013a, 2013b). These include 22 List A species, 39 List B species, and 15 List C species. In addition, there are 20 Watch List species that have the potential to be designated as noxious in the future. These classifications are defined as follows:

List A: Designated by the Commissioner for eradication.

List B: Species for which the Commissioner, in consultation with the state noxious weed advisory committee, local governments, and other interested parties, develops and implements state noxious weed management plans designed to stop the continued spread of these species.

List C: Species for which the Commissioner, in consultation with the state noxious weed advisory committee, local governments, and other interested parties, would develop and implement state noxious weed management plans designed to support the efforts of local governing bodies to facilitate more effective integrated weed management on private and public lands. The goal of such plans would not be to stop the continued spread of these species but to provide additional education, research, and biological control resources to jurisdictions that choose to require management of List C species.

Watch List: Determined to pose a potential threat to the agricultural productivity and environmental values of the lands of the state. The Watch List is intended to serve advisory and educational purposes only. Its purpose is to encourage the identification and reporting of these species to the Commissioner in order to facilitate the collection of information to assist the Commissioner in determining which species should be designated as noxious weeds.

N2.1.4 State of Utah

In Utah, a total of 27 plant species are designated as noxious weeds under the authority of the Utah Noxious Weed Act (Utah Department of Agriculture 2010). These include 12 Class A species, 10 Class B species, and 5 Class C species, as per the authority vested in the State of Utah Commissioner of Agriculture and Food under Section 4-17-3. These classifications are defined as follows:

Class A Early Detection Rapid Response (EDRR): EDRR Declared noxious weeds not native to the state of Utah that pose a serious threat to the state and should be considered as a very high priority.

Class B (Control): Declared noxious weeds not native to the state of Utah that pose a threat to the state and should be considered a high priority for control.

Class C (Containment): Declared noxious weeds not native to the state of Utah that are widely spread but pose a threat to the agricultural industry and agricultural products with a focus on stopping expansion.

In addition, there are eight additional noxious weeds designated by Project counties (Utah Department of Agriculture 2009).

N2.1.5 State of Nevada

In Nevada, a total of 48 plant species are designated as noxious weeds under the authority of the Nevada Revised Statutes: Chapter 555.005-555.5570 —Control of Insects, Pests, and Noxious Weeds (State of Nevada Department of Agriculture 2012). These include 31 Category A species, nine Category B species, and eight Category C species. These classifications are defined as follows:

Category A: Noxious weeds that are generally not found or that are limited in distribution throughout the State.

Category B: Noxious weeds that are generally established in scattered populations in some counties of the State.

Category C Weeds: Noxious weeds that are generally established and generally widespread in many counties of the State.

N2.1.6 BLM or Forest Service Invasive Weeds

Updated Plans will identify invasive weeds for each affected BLM Field Office and USFS National Forest and would focus monitoring and control methods on these species.

N2.2 Noxious Weed Management

The requirements for Noxious Weed Management will be determined based on information provided in the FEIS, BA, BO, BE, and agency consultation. Updated information on Noxious Weed Management will be included in the NTP POD version of this Plan. Section N2.2 provides a description of what may be required in future versions of this Plan. All actions described below are subject to change in future versions of this Plan.

The various regulatory agencies with jurisdiction over the Project have different noxious weed management requirements. TransWest would adhere to all EPA, USDA, USDOI and state agricultural agencies' (Wyoming, Colorado, Utah, and Nevada) requirements during all components of the TWE Project. In addition, TransWest would adhere to BLM, USFS, NPS, URMCC, or Reclamation requirements when crossing lands managed by these agencies. All four TWE Project states require that all noxious weeds designated for that state (except for Colorado List C and Watch List species) are eradicated before such weeds propagate and spread, and some Project counties have additional county-declared noxious weeds that require treatment. The following sections outline TransWest's

approach to identifying problem areas, preventative strategies, and treatment measures for noxious weeds.

N2.2.1 Weed Management Personnel Requirements

Weed management actions would be carried out by weed management specialist(s) with the following qualifications:

- Training and experience in native plant taxonomy/identification;
- Training and experience in field ecology and plant community mapping;
- Training in weed management or Integrated Pest Management with an emphasis on weeds; Experience in coordination with agency and private landowners; and,
- Additional requirements depending on roles and responsibilities of personnel, as described later in this Plan.

N2.2.2 Pre-Construction Noxious Weed Surveys

Prior to construction activities, TransWest will be required to conduct pre-construction surveys for noxious weeds in the footprints of the ROW, access roads, and temporary work areas associated with Project facilities. For all federal lands, TransWest will collect weed inventory data so that it meets both project needs and is compatible with use in BLM's National Invasive Species Information Management System (NISIMS) (BLM 2014). Survey information collected during pre-construction surveys may include species name, global positioning system (GPS) location of weed infestations, percent cover, and approximate size of weed infestations in acres. Noxious weed GPS location information would be listed in Table N7, plotted on maps, and included in Pesticide Use Proposals (PUPs) to be submitted and approved by the appropriate land management agency before any pesticide treatments are conducted. Information in Table N7 will be provided in updated versions of this Plan when pre-construction noxious weed surveys have been completed, if necessary.

TABLE N7 NOXIOUS WEED PROBLEM AREAS IDENTIFIED IN THE TWE PROJECT FOOTPRINT (ROW, ACCESS ROADS, STAGING AREAS, MATERIAL STORAGE AREAS, ETC.)

COUNTY / STATE	MILE-POST	PROJECT FEATURE TYPE[1]	SPECIES	WEED CLASS[2]	WEED COVER[3]	SIZE (ACRES)[4]	DATA SOURCE[5]	LOCATION	
								LATITUDE	LONGITUDE

[1]Project feature types: ROW; permanent access road; temporary access road; ground electrode system; staging area; material storage area; fly yard; pulling, tensioning, and splicing site; communication and regeneration site; and batch plant.
[2]Location of Class A, B, C, Watch, or county weed species per state/county noxious weed list where weed is located. The state of Wyoming does not classify noxious weeds beyond state vs. county.
[3]Percent cover was used to determine weed abundance. The following categories were used: Trace = <1%, Low = 1-5%, Moderate = 6-25%, and High = 26=100% (may be modified depending on agency-provided data).
[4]Size (acres) refers to the approximate land area of the weed problem area.
[5]Agency abbreviations (TBD)

N2.2.3 Identification of Problem Weed Areas

Before vegetation and soil disturbance activities began, noxious weed problem areas may be identified and marked with signs by Project construction personnel, Project biologists, or Environmental Inspectors. Weed problem areas would include all locations where noxious weed species (or other invasive weed species per agreement with agencies) would need to be controlled (supports BLM 2007). Signs placed on the ROW (or on the edge of the ROW after clearing and grading activities) and other Project areas would alert construction personnel to the locations and types of weed infestations.

N2.2.4 Preventative Measures

TransWest recognizes that prevention is the most effective approach to noxious weed management. The following preventive measures would be implemented to minimize the spread of both terrestrial and aquatic noxious weeds:

- Prevent the introduction and spread of weeds caused by moving weed-infested sand, gravel, borrow, and fill material. Active gravel and borrow sources should be visually inspected and determined to be noxious weed free before use. If possible, borrow materials should be verified weed seed free by sending samples to a laboratory. A source supporting noxious weeds should be considered for closure until it is weed free (supports BLM 2007 and Forest Service Manual 2080 – Region 4 (USFS 2001)).

- Signs would identify the locations (or segments of ROW) of weed problem areas where separate topsoil segregation must occur before earth disturbance may take place.

- Inspect material sources on site (e.g., soil stockpiles, mulches), and ensure that they are weed-free before use and transport. Treat weed-infested sources to eradicate weed seed and plant parts, and strip and stockpile contaminated material before any use of pit material (supports BLM 2007).

- Prevent weed establishment by minimizing driving through weed-infested areas. Additional measures may include limiting or implementing additional restrictions on vehicle movement through weed-infested areas when the spread of seeds or propagules is most likely (supports BLM 2007).

- Avoid acquiring water for dust abatement where access to the water is through weed-infested sites (supports BLM 2007).

Worker Environmental Awareness Program (WEAP) Training

TransWest would conduct an Worker Environmental Awareness Program (WEAP) before surface disturbance activities begin to educate all Project personnel regarding environmental concerns and requirements, including weed identification, prevention, control methods, and the potential impacts of noxious weeds on agriculture, livestock, and wildlife. All personnel would be informed of the importance of and techniques in preventing the spread of noxious weeds to uncontaminated areas and of controlling the proliferation of weeds already present. No personnel would be allowed to enter the TWE Project ROW before first taking part in the WEAP, at any point during the Project. Qualified biological monitors approved by the BLM, USFS, NPS, Reclamation, and URMCC, as appropriate, would conduct training for the WEAP program.

Cleaning Equipment, Vehicles, and Personnel

The following measures specify procedures for cleaning equipment and vehicles to prevent noxious weeds from spread or invasion as a result of the TWE Project (supports BLM 2007 and Forest Service Manual 2900 (USFS 2011b)):

- Before construction activities start, TransWest would identify sites where construction vehicles and equipment can be cleaned. These sites would be reviewed and approved by the landowner or appropriate land management agency. Sites would not be located in sensitive resource areas such as wetlands. All cleaning stations shall be allowed only in designated areas at least 100 feet from streams and wetlands. Cleaning stations would be identified by signs on the edge of the ROW for the duration of the Project, and GPS locations of cleaning stations provided in each PUP (supports BLM 2007; see Attachments A & B). Cleaning stations shall be contained with barriers to prevent migration of wastewater and/or sediments into water bodies. Waste concrete material shall be removed and properly disposed of once it has hardened.

- At cleaning sites, a high-pressured washer would be used to clean construction vehicles and equipment before entering and leaving the ROW, and before entering public lands.

- It is assumed that any water body could contain aquatic invasive species (e.g., zebra and quagga mussels) and invasive weed species. If work occurs in or near a water body, all equipment would be decontaminated at a cleaning station. Decontamination would occur before arrival at a Project site to avoid the transfer of aquatic invasive species from a previous work site in or near water. Decontamination would consist of either of these actions: 1) Drain all water from equipment and compartments; clean equipment of all mud, plants, debris, and aquatic organisms; and dry equipment for specified time by season (five days in June through August, 18 days in March through May, and three days in December through February when temperatures are at or below freezing); or 2) Use a high pressure (2,500 pounds per square inch [psi]) hot water (140 degrees Fahrenheit [°F]) pressure washer to thoroughly clean equipment and flush all compartments that may hold water. A field monitor would be present to ensure that the cleaning was completed prior to vehicle and equipment moving to other streams and drainages.

- Inspect, remove, and properly dispose of weed seed and plant parts found on workers' clothing and equipment. Proper disposal entails bagging the seeds and plant parts and incinerating them (supports BLM 2007 and Colorado Noxious Weed Act).

N2.2.5 Treatment Measures

TransWest may be required to implement noxious weed treatment measures in accordance with existing regulations and jurisdictional land management agency or landowner agreements. TransWest would focus treatment efforts on areas with designated noxious weed species unless other agreements have been made with the jurisdictional agencies. Special attention would be given to state- and federal-designated noxious weeds (versus county-listed noxious weeds), and noxious weeds listed as higher priority species, if applicable (Category A weeds in Tables Q3 through Q6). TransWest would continue coordinating with appropriate agencies to determine which of the species would require treatment and to determine appropriate treatment schedules.

Where there is a pre-existing high occurrence of noxious weeds in the vicinity of the TWE Project, eradication would be difficult or impossible unless performed on a scale well beyond that of the TWE Project timeline. At a minimum, the preventative measures outlined in Section N2.2.4 would be

implemented for such species. TransWest would consult with the appropriate agency personnel in situations where herbicide treatment may not be an appropriate option (e.g., near known special status species locations). TransWest would obtain agency concurrence before deciding to forego herbicide treatment of any widespread noxious weed species. Alternative treatments (e.g., biological controls, mechanical treatments) may be implemented if recommended by the appropriate agency where herbicide treatment is not an option. General treatment methods that may be used include:

- Noxious weed problem areas would be pre-treated with pesticides before implementing construction activities (supports BLM 2007; also see Table N1).
- Control of noxious weeds could include chemical, physical, and biological methods and would be developed in consultation with the land agencies and private landowners (supports USDOI 2007; BLM 2007; Forest Service Manual 2150 (USFS 2013a), Forest Service Manual 2900 (USFS 2011b), also see Table N1).
- When necessary to blade noxious weed infested roadsides or ditches, work would be scheduled for spring or early summer prior to the seed-set stage or later in the fall after seeds have fallen. Surface disturbance would be minimized and bladed material isolated in weed infested sites (supports Forest Service 2150 – Region 4).
- Timing of treatment for noxious weeds on the TWE Project would vary depending on species targeted, and may require multiple treatments in a given year to effectively treat all noxious weeds.

N2.2.6 Reclamation Measures

The Reclamation Plan (Appendix Q) describes detailed procedures for revegetation and handling of soil and mulches (e.g., hay, straw) to prevent noxious weed spread or invasion as a result of the TWE Project.

N3.0 PESTICIDE APPLICATION, HANDLING, SPILLS, AND CLEANUP

N3.1 Pesticide Applicator Training

The following measures for pesticide applicator training procedures may be required for the TWE Project. All pesticide applicators would also be required to undergo the standard health and safety training procedures required for all Project workers.

- All pesticide applicator personnel would take training required for all workers and additional hazard training specific to safe pesticide use and reporting serious accidents, which would be documented. Following training, pesticide applicators would be certified by the state where pesticides are to be applied, per the jurisdictional agency's requirements.
- Prior to work activities, all pesticide applicator personnel would be instructed on the protection of cultural, paleontological, ecological resources, fire safety, and other natural resources in accordance with POD provisions. To assist in this effort, the Construction Contractor(s) would address (a) federal, state, and tribal laws regarding cultural resources, fossils, wetlands, plants, and wildlife, including collection and removal; and (b) the importance of these resources and the purpose and necessity of protecting them. All pesticide applicator personnel would specifically be instructed on avoidance areas and/or timing

restrictions for the protection of humans, wildlife, special status species, wetlands, and other sensitive areas.

- Prior to work activities, all pesticide applicator personnel would be instructed where/if there is a known occurrence of protected species or habitat in the construction area. Sensitive areas would be considered avoidance areas and would be marked on the ground and maintained through the duration of the Contract.

N3.2 Pesticide Application and Handling

Pesticide application and handling procedures for the TWE Project follow numerous federal and state regulations. The following measures for pesticide application and handling may be required for the TWE Project.

- Pesticides would only be applied by state-certified pesticide applicators using protective equipment as directed by the herbicide product label.

- Only EPA-registered pesticides that are applied within the framework of agency policies, registered in the state where they are used, are applied in a manner consistent with label directions and state pesticide regulations would be used, and following all "advisory statements". Only BLM-approved pesticides listed in Table N8 would be used on all land ownerships, unless otherwise approved by the appropriate land management agency (BLM 2007, 2012). Pesticide use would be limited to non-persistent immobile pesticides that are applied only in accordance with label and application permit directions for terrestrial and aquatic applications. This includes applying herbicides on a spot treatment basis, suspending herbicide applications whenever weather conditions may cause off-site drift, using drift control agents, and using low volatile formulations.

- Treat individual plants rather than broadcast application in areas where special status species occur. Prior to herbicide use within federally listed occupied habitat the Applicant will coordinate with the USFWS and BLM to minimize impacts to federally listed species.

- For BLM lands, all pesticide application and handling would be consistent with the Standard Operating Procedures, Mitigation Measures and Conservation Measures contained in Vegetation Treatments Using Herbicides on BLM Lands in 17 Western States Programmatic EIS and with any locally overriding conservation measures from site specific NEPA documents.

- Use herbicides of low toxicity to humans, wildlife, fish, and livestock, where feasible. See Table N8 for herbicides approved on the TWE Project.

- All applications would be avoided near sole source aquifer areas.

- When mixing and applying pesticides, the herbicide label would be adhered to for protective equipment, re-entry period, and environmental protection constraints. Pesticides would not be stored, mixed, or loaded, or equipment rinsed near or on stream banks, lake shorelines, ditches, irrigation canals, or other areas where runoff could impact an aquatic body.

- On lands managed by Ashley National Forest, only land application of approved herbicides to control noxious weeds would be allowed. Herbicides are not allowed to contaminate surface water.

- To improve coordination and avoid potential conflicts and safety concerns during implementation of the treatment, livestock permittees would be notified of the herbicide treatment. Coordinate with BLM and USFS to obtain permittee's name and contact information for notification. Design treatments to take advantage of normal livestock grazing rest periods, when possible. Avoid use of diquat in riparian pasture while pasture is being used by livestock.

- A copy of Material Safety Data Sheets (MSDSs) would be kept at work sites. MSDSs are available for review at http://www.cdms.net/.

- Pesticides and pesticide containers would be transported, stored, and disposed of in accordance with applicable state, local, and federal laws and regulations.

- Proper application equipment would be used to minimize herbicide drift (e.g., spray equipment that produces 200- to 800-micron diameter droplets [spray droplets of 100 microns and less are most prone to drift]). Proper application methods would be implemented (e.g., set maximum spray heights, use appropriate buffer distances between spray sites and non-target resources).

- Granular herbicides would not be applied on slopes of more than 15% where there is the possibility of runoff carrying the granules into non-target areas.

- Weather forecasts would be reviewed daily before pesticide application to evaluate conditions for pesticide drift or runoff and general fire safety. Pesticides would not be applied when winds exceed 10 miles per hour (mph), or when a serious rainfall event is imminent, and treatments on steep slopes would be minimized.

- Pesticide applicator personnel may only operate vehicles on designated roads and park in areas free of vegetation.

- A no-spray buffer would be maintained between treatment areas and human residences or crops, with a minimum buffer of 100 feet for ground applications, unless a written waiver is granted. If a written waiver is granted, land management agencies, landowners, adjacent landowners, and/or other appropriate parties must be notified before pesticide treatment.

- Post treated areas with appropriate signs at common public access areas and observe restricted entry intervals specified by the product label. When possible, spray applications would be accomplished when human or livestock use is likely to be low. Notify land management agencies, landowners, adjacent landowners, and/or other appropriate parties before pesticide treatment.

- Buffer zones would be provided along streams, rivers, lakes, and riparian areas, including riparian areas along ephemeral and intermittent streams, as well as downstream habitats and species/populations of interest. Use appropriate herbicide-free buffer zones for herbicides not labeled for aquatic use, with minimum widths of 25 feet for vehicle and 10 feet for hand spray applications. Wild and Scenic Rivers require a buffer of 0.25 mile on either side of river.

- Maintain Pesticide Application Records (PARs). All herbicide treatments would be documented in daily logs, which include the type of herbicide, formulation, pounds of active ingredient applied per acre, gallons of solution applied, method of application, date, time, and

location. Pesticide use reports would be completed at the end of the treatment season to summarize types and amount of herbicides applied. Pesticide use report and Pesticide Application Records would be submitted to the appropriate agency by annually for the life of the Special Use Permit (SUP). If NISIMS is used to record treatments, it would eliminate the need for daily completion of a PAR.

- Herbicide products would be selected that are least damaging to the environment while providing the desired results, using the least amount of herbicide needed to achieve the desired result, and for minimizing additional impacts from herbicide degradates, adjuvants, inert ingredients, and tank mixtures. Only BLM-approved adjuvants would be used. Spot applications or low-boom broadcast operations would be preferred to limit contamination of wildlife food sources.

- TransWest would prepare a PUP for each land management agency or land owner before pesticide spraying or on the schedule required. Each PUP would identify a list of approved herbicides that may be used as well as site-specific information about the herbicides to be used, timing and locations where specific herbicides would be used, other weed treatments that would be used (e.g., biocontrol), maximum application rate, targeted species, general site characteristics, description of sensitive resources present and protective measures, and effects of the treatment. PUPs for BLM lands must be signed by a certified weed applicator, the field office manager, state coordinator, and deputy state director before the treatment can go forward, and by District and Forest pesticide use coordinators on USFS lands. The Pesticide Application Record, which must be completed within 24 hours after completion of the application, documents the actual rate of application and that all the above factors have been taken into account. The PUPs and associated reporting requirements would be submitted on the schedule required for each BLM Field Office or National Forest office.

- Buffer zones would be provided around hibernacula and important pollinator nesting habitat.

- Herbicide spraying in desert tortoise habitat in Nevada would require consultation with the BLM and U.S. Fish and Wildlife Service (USFWS).

- The cut-stumps of mature salt cedar stands that are cut as part of vegetation clearing would be immediately painted with herbicides. The specific control methods and herbicide to be used would be determined in consultation with the Nevada BLM State and Field Office offices. Additional control measures could include planting native or desired plant species following treatment to provide erosion control and the use of biocontrols.

- Cleaning sites, access roads, staging areas, mulch and soil stockpiles, and special status plant occurrences and other sensitive sites would be prioritized for weed treatment to reduce the potential of weeds spreading or affecting sensitive areas.

TABLE N8 HERBICIDE ACTIVE INGREDIENTS PERMITTED FOR TREATING WEEDS FOR THE TWE PROJECT

HERBICIDE ACTIVE INGREDIENTS	TRADE NAME	ADDITIONAL RESTRICTIONS AFTER FOLLOWING MSDS AND LABEL
2,4-D	Agrisolution 2,4-D LV6, 2,4-D Amine 4, Five Star, ,4-D Amine, HardBall, Saber, Aqua-Kleen, Weedar 64, and others	Minimize the size of application areas, where practical, when applying to limit impacts to wildlife and livestock, particularly through contamination of food items. Do not exceed the typical application rate when applying in known traditional use areas, and to reduce risk to occupational and public receptors.
bromacil	Bromacil 80DF, Hyvar X, Hyvar XL, others	Minimize use in watersheds with downgradient ponds and streams if potential impacts to aquatic plants or fish are identified, particularly during periods when fish are in sensitive life stages. Minimize the size of application areas, where practical, to limit impacts to wildlife and livestock, particularly through contamination of food items. Use the typical application rate, where feasible, when applying to reduce risk to occupational and public receptors. Do not exceed the typical application rate when applying in known traditional use areas. Do not apply in rangelands, and use appropriate buffer zones if used to limit contamination of off-site rangeland or wildlife vegetation.
bromacil + diuron	Bromacil/Diuron 40/40, Krovar I DF, DiBro 4+4, DiBro 4+2, Weed Blast 4G, others	See restrictions for each active ingredient.
chlorsulfuron	Alligare Chlorsulfuron , Telar DF , Chlorsulfuron E-Pro 75 WDG, others	N/A
clopyralid	Spur, Pyramid R&P, Clopyralid 3, Reclaim, Stinger, Transline, others	N/A
clopyralid + 2,4-D	Commando, Curtail, Cutback	See restrictions for each active ingredient.
dicamba	Banvel, Clarity, others	To minimize risks to terrestrial wildlife, do not exceed the typical application rate for applications. Do not apply across large application areas, where feasible, to limit impacts to livestock, particularly through the contamination of food items.
dicamba + 2,4-D	Range Star, Weedmaster, Outlaw, others	See restrictions for each active ingredient.
diflufenzopyr + dicamba	Distinct, Overdrive	Aerial application of this herbicide is prohibited on BLM lands. Minimize the size of application areas, where practical to limit impacts to wildlife and livestock, particularly through contamination of food items.
diquat	Alligare Diquat, NuFarm Diquat SPC 2 L Herbicide, Reward, others	Limit use in water bodies that have native fish and aquatic resources. Limit application to ATV, truck spraying, and boat applications to reduce risks to occupational receptors. Limit applications to areas away from high residential, subsistence, or traditional use to reduce risks to public receptors. Use the typical application rate, where feasible, when applying to reduce risk to occupational and public receptors.

HERBICIDE ACTIVE INGREDIENTS	TRADE NAME	ADDITIONAL RESTRICTIONS AFTER FOLLOWING MSDS AND LABEL
diuron	Diuron 80DF, Karmex DF, Direx 4L, others	Minimize use in watersheds with downgradient ponds and streams if potential impacts to aquatic plants or fish are identified, particularly during periods when fish are in sensitive life stages. To minimize risks to terrestrial wildlife and livestock, do not exceed the typical application rate for applications. Minimize the size of application areas, where practical, when applying to limit impacts to wildlife and livestock, particularly through contamination of food items. Evaluate applications on a site-by-site basis to avoid risks to humans. There appear to be few scenarios where can be applied without risk to occupational receptors. Do not exceed the typical application rate when applying in known traditional use areas, and to reduce risk to occupational and public receptors. Do not apply in rangelands, and use appropriate buffer zones if used to limit contamination of off-site rangeland or wildlife vegetation.
fluridone	Avast!, Sonar AS, others	Do not exceed the typical application rate when applying in known traditional use areas, and to reduce risk to occupational and public receptors.
glyphosate	Aqua Star, GlyStar Gold, Accord SP, Rodeo, Mirage, Roundup Original, Honcho, others	Only use adjuvants BLM has approved for aquatic environments, and either avoid using glyphosate formulations containing polyoxyethyleneamine (POEA), or use formulations with the least amount of POEA, to reduce risks to aquatic organisms in aquatic environments. To minimize risks to terrestrial wildlife and livestock, do not exceed the typical application rate for applications. Where practical, limit to spot applications in rangeland and wildlife habitat areas to avoid contamination of wildlife food items.
glyphosate + 2,4-D	Campaign, Landmaster BW	See restrictions for each active ingredient.
hexazinone	Velpar ULW, Velossa, Pronone MG, others	To minimize risks to terrestrial wildlife and livestock, do not exceed the typical application rate for applications. Where practical, limit to spot applications in rangeland and wildlife habitat areas to avoid contamination of wildlife food items. Do not apply with an over-the-shoulder broadcast applicator. Do not exceed the typical application rate when applying in known traditional use areas, and to reduce risk to occupational and public receptors.
hexazinone + sulfometuron methyl	Oustar, Westar	See restrictions for each active ingredient. Aerial application of this herbicide is prohibited on BLM lands.
imazapic	Panoramic 2SL, Plateau	N/A
imazapic + glyphosate	Journey	See restrictions for glyphosate.
imazapyr	Arsenal, Chopper, Imazapyr 2SL, Polaris, others	N/A

HERBICIDE ACTIVE INGREDIENTS	TRADE NAME	ADDITIONAL RESTRICTIONS AFTER FOLLOWING MSDS AND LABEL
imazapyr + diuron	Imazuron E-Pro , Mojave 70 EG, Sahara DG, SSI Maxim Topsite 2.5G	See restrictions for diuron.
imazapyr + metsulfuron methyl	Lineage Clearstand	N/A
imazapyr + sulfometuron methyl + metsulfuron methyl	Lineage HWC, Lineage Prep	See restrictions for sulfometuron methyl. Aerial application of this herbicide is prohibited on BLM lands.
metsulfuron methyl	Escort DF, Patriot, PureStand, Metsulfuron Methyl DF, others	N/A
metsulfuron methyl + chlorsulfuron	Cimarron Extra, Cimarron Plus	N/A
metsulfuron methyl + dicamba + 2,4-D	Cimarron MAX	See restrictions for dicamba and 2,4-D.
picloram	Grazon PC, Picloram K, Tordon 22K, Triumph K, others	Do not apply across large application areas, where feasible, to limit impacts to livestock, particularly through the contamination of food items.
picloram + 2,4-D	Gunslinger, Picloram + D, Grazon P+D, Trooper 101, others	See restrictions for each active ingredient.
picloram + 2,4-D + dicamba	Trooper Extra	See restrictions for each active ingredient.
sulfometuron methyl	Oust XP, SFME E-Pro 75EG, Spyder, others	Aerial application of this herbicide is prohibited on BLM lands. Minimize use in watersheds with downgradient ponds and streams if potential impacts to aquatic plants or fish are identified, particularly during periods when fish are in sensitive life stages.
sulfometuron methyl + chlorsulfuron	Landmark XP	See restrictions for sulfometuron methyl. Aerial application of this herbicide is prohibited on BLM lands.
sulfometuron methyl + metsulfuron methyl	Oust Extra	See restrictions for sulfometuron methyl. Aerial application of this herbicide is prohibited on BLM lands.
tebuthiuron	Alligare Tebuthiuron 80 WG , Spike 20P, SpraKil S-5 Granules, others	To minimize risks to terrestrial wildlife and livestock, do not exceed the typical application rate for applications. Do not exceed the typical application rate when applying in known traditional use areas, and to reduce risk to occupational and public receptors.
tebuthiuron + diuron	SpraKil SK-13 Granular, SpraKil SK-26 Granular	See restrictions for each active ingredient.
triclopyr	Element 3A, Garlon 4, Pathfinder, Remedy, Tahoe 3A, Triclopyr 3, others	To minimize risks to terrestrial wildlife and livestock, do not exceed the typical application rate for applications. Do not apply across large application areas, where feasible, to limit impacts to livestock, particularly through the contamination of food items. Do not exceed the typical application rate when applying in known traditional use areas, and to reduce risk to

HERBICIDE ACTIVE INGREDIENTS	TRADE NAME	ADDITIONAL RESTRICTIONS AFTER FOLLOWING MSDS AND LABEL
		occupational and public receptors.
triclopyr +2,4-D	Aquasweep, Candor, Crossbow, Everett	See restrictions for each active ingredient.
triclopyr + clopyralid	Prescott Herbicide, Redeem R&P, Brazen	See restrictions for triclopyr.

N3.3 Pesticide Spills and Cleanup

The following measures for pesticide spills and cleanup may be required for the TWE Project. Additional details regarding spills and cleanup are provided in the Spill Prevention and Response Plan (Appendix S).

- TransWest would address the potential of pesticide spills and cleanup during annual coordination meetings with local emergency management officials.

- TransWest would report to all appropriate land owners or agencies immediately if there are any pesticide spills, unplanned non-target pesticide applications, unusual occurrences of drift, unforeseen effects on wildlife or other resources, or any other situation that may affect public welfare. Pesticide clean-up and disposal is the responsibility of TransWest and would comply with all federal, state, and county requirements.

- In the event of an accidental release to the environment, spill cleanup procedures and documentation of the event would be implemented, including a cause analysis; appropriate corrective actions taken; and a characterization of the resulting environmental or health and safety impacts. Documentation of the event would be provided to the land management agency's authorized officer and other federal and state agencies, as required.

- Construction Contractor(s) would possess a spill kit. At a minimum the following items are suggested: shovel, 10 pounds of absorbent material (cat litter, soil, sawdust, or absorbent clay), large polyethylene bags with ties, safety goggles, rubber gloves, protective overalls, rubber boots, 5-gallon pail, respirator and cartridges suited to the chemical composition of the pesticide(s), dust pan, shop brush, portable eyewash, blank labels, first aid kit, apron, soap, water, and phone numbers of appropriate emergency personnel and CHEMTREC. At all times, the Construction Contractor(s) would maintain the spill kits where pesticide spills are most likely to occur.

N4.0 MONITORING

The purpose of TransWest's noxious weed monitoring program would be to ensure that Project areas containing identified problem weeds are progressing toward the long-term goal of appropriate vegetative cover and diversity, and that existing weed populations are not spreading to new areas as a result of Project construction. While TransWest's primary goal would be to eradicate noxious weed populations within Project areas, a secondary and likely more realistic goal would be to prevent the introduction of new weed populations and spreading of existing populations (containment).

The noxious weed monitoring program would also help TransWest assess its noxious weed management approach. In the event that large infestations occur or reoccur, an evaluation would be performed to determine what caused the infestation, and a new strategy may be implemented. Any significant shift in weed management treatment would be discussed with the appropriate agencies prior to being implemented.

Noxious weed sites that would be prioritized for monitoring include cleaning sites, access roads, staging areas, mulch and soil stockpiles, and special status plant occurrences and other sensitive sites (which are also prioritized for treatment), so that these sites can be re-treated as needed during the season.

In areas of disturbance, TransWest would conduct noxious weed monitoring as specified in the ROD, ROW grants or special use authorizations for the Project. Annual monitoring would be conducted until vegetation has successfully reestablished. General monitoring for noxious weeds would occur during routine operations and maintenance of the project facilities.

PUPs and PARs may be used for more site-specific implementation monitoring. For example, the PARs can be used to track whether the application was made at the correct time and if mitigation for sensitive wildlife concerns is included in the PUP (see Appendices A and B; BLM 2007; Forest Service Manual 2150 (USFS 2013a)).

N5.0 REFERENCES

Animal and Plant Health Inspection Service (APHIS). 2010. Federal Noxious Weed List. Riverdale, Maryland. Available URL: http://www.aphis.usda.gov/plant_health/plant_pest_info/weeds/downloads/weedlist.pdf [accessed November 25, 2013].

Bureau of Land Management (BLM). 2007. Record of Decision: Vegetation Treatments Using Herbicides on Bureau of Land Management Lands in 17 Western States Programmatic

_____. 2008. Integrated Vegetation Management Handbook H1740-2. Release 1-1714. 103 pp. plus appendices.

_____. 2011. Instruction Memorandum No. WYD-03-2011-002, Rawlins Field Office Reclamation Guidance. Expires 02/28/2012.

_____. 2012. Information Bulletin No. 2012-022, Updating List of Approved Herbicide Formulations and Adjuvants. Dated 12/06/2012.

_____. 2014. Instruction Memorandum No. 2014-038, Weed Inventory/Mapping Update. Dated 02/04/2014.

Carbon County. 2013. Weeds and Pests of Carbon County. Available URL: http://www.carboncountyweed.com/?page_id=39 [accessed December 2, 2013].

Colorado Department of Agriculture. 2013a. Noxious Weed Program-Noxious Weed List. Lakewood, Colorado. Available URL: http://www.colorado.gov/cs/Satellite?c=Page&cid=1174084048733&pagename=Agriculture-Main%2FCDAGLayout [accessed December 23, 2013].

Colorado Department of Agriculture. 2013b. Conservation Services Division 8 CCR 1206-2: Rules Pertaining to the Administration and Enforcement of the Colorado Noxious Weed Act. Lakewood, Colorado.

Consortium of Intermountain Herbaria and Southwestern Environmental Information Network. 2013. Intermountain Region Herbarium Network. Available URL: http://intermountainbiota.org/portal/collections/index.php?catid=1[accessed December 23, 2013].

National Park Service (NPS). 2010. National Park Service Director's Order 77-7 Natural Resource Protection—Integrated Pest Management. Available URL:

http://www.nature.nps.gov/biology/ipm/manual/ipmmanual.cfm [accessed December 2, 2013].

Rice, P.M. 2013. INVADERS Database System. Division of Biological Sciences, University of Montana, Missoula. Available URL: http://invader.dbs.umt.edu. Accessed November 26, 2013.

State of Nevada Department of Agriculture. 2012. Nevada Noxious Weed List by Category. Available URL: http://agri.nv.gov/uploadedFiles/agrinvgov/Content/Plant/Noxious_Weeds/Documents/NVNoxiousWeedList_by%20category_2012.pdf [accessed November 25, 2013].

U.S. Department of Agriculture (USDA). 2011. State Noxious-Weed Seed Requirements Recognized in the Administration of the Federal Seed Act. Agricultural Marketing Service, Livestock and Seed Program, Seed Regulatory and Testing Branch.

U.S. Department of Agriculture, Natural Resources Conservation Service (USDA Plants Database). 2013. The PLANTS Database. National Plant Data Center, Baton, Rouge, Louisiana. Available URL: http://plants.usda.gov [accessed November 26, 2013].

U.S. Department of Interior (USDOI). 2007. Departmental Manual 517 DM 1, Environmental Quality Programs, Part 517 – Pesticides, Chapter 1-Integrated Pest Management Policy. Office of Environmental Policy and Compliance.

U.S. Forest Service (Forest Service). 1988. Forest Service Manual 2100 - Environmental Management: Chapter 2150 - Pesticide-use Management and Coordination, Rocky Mountain Region (Region 2) Supplement No. 22. Denver, Colorado.

_____. 1994. Forest Service Handbook 2109.14 - Pesticide-Use Management and Coordination Handbook. Washington Office (WO) Amendment No. 2109.14-94-1. Washington, D.C.

_____. 2001. Forest Service Manual 2080 – National Forest Resource Management, Chapter 2080-Noxious Weed Management, Intermountain Region (Region 4) Supplement No. R4 2000-2001-1. Ogden, Utah.

_____. 2003. Forest Service Manual 2100 - Environmental Management: Chapter 2150 - Pesticide-use Management and Coordination, Intermountain Region (Region 4)-Uinta National Forest Supplement No. r4_uinta_2100-2003-1. Provo, Utah.

_____. 2011a. Forest Service Manual 2080 – National Forest Resource Management, Chapter 2080-Noxious Weed Management, Washington Office (WO) Amendment No. 2000-2011-1. Washington, D.C.

_____. 2011b. Forest Service Manual 2900 - Invasive Species Management, Chapter – Zero Code, Washington Office (WO) Amendment No. 2900-2011-1. Washington, D.C.

_____. 2012. Forest Service Manual 2150 - Environmental Management: Chapter 2150 - Pesticide-use Management and Coordination, Intermountain Region (Region 4) Supplement No. 2100-2012-1. Ogden, Utah.

_____. 2013a. Forest Service Manual 2150 - Environmental Management: Chapter 2150 - Pesticide-use Management and Coordination, Washington Office (WO) Amendment No. 2100-2013-1. Washington, D.C.

_____. 2013b. Instructions for Form FS-2100-2, Pesticide-Use Proposal. Available URL: http://www.fs.usda.gov/Internet/FSE_DOCUMENTS/stelprdb5408147.pdf [accessed December 20, 2013].

_____. 2013c. Pesticide-Use Proposal (Reference FSM 2150).

University of Nevada Cooperative Extension. 2010. Nevada Noxious Weed Field Guide. Available URL: http://agri.nv.gov/uploadedFiles/agrinvgov/Content/Plant/Noxious_Weeds/Documents/noxious%20weed%20field%20guide.pdf [accessed November 26, 2013].

University of Wyoming Extension. 2013. Field Guide: Wyoming Weed Watchlist. B-1227. Available URL: http://www.wyomingextension.org/agpubs/pubs/B1227.pdf [accessed November 26, 2013].

Utah Department of Agriculture. 2009. County Declared Noxious Weeds in Utah. Available URL: http://www.ag.utah.gov/documents/CountyNoxiousWeeds.pdf [accessed December 5, 2013].

Utah Department of Agriculture. 2010. Utah Noxious Weed List. Available URL: http://www.ag.utah.gov/documents/UtahNoxiousWeeds.pdf [accessed December 5, 2013].

Utah State University Cooperative Extension. 2009. Noxious Weed Field Guide for Utah. Third Edition. Available URL: http://extension.usu.edu/files/publications/publication/pub__8746541.pdf [accessed November 26, 2013].

Whitson, T.D. 2000. Weeds of the West. Western Society of Weed Science in cooperation with the Western United States Land Grant Universities Cooperative Extension Services: Laramie, Wyoming.

Wyoming Weed and Pest Council (WWPC). 2013. Wyoming Weed & Pest Control Act Designated List. Available URL: http://www.wyoweed.org/weeds/state-designated-weeds [accessed December 5, 2013].

ATTACHMENT A
BLM PESTICIDE USE PROPOSAL (PUP) TEMPLATE

UNITED STATE DEPARTMENT OF THE INTERIOR

BUREAU OF LAND MANAGEMENT

PESTICIDE USE PROPOSAL

STATE: _____

_____

COUNTY: _____

_____

DISTRICT: _____

_____

DURATION OF PROPOSAL: _____

LOCATION: _____

DATE:

PROPOSAL NUMBER:

EA REFERENCE NUMBER:

DECISION RECORD (DR) NUMBER:

_____

_____

_____

ORIGINATOR – NAME:

_____

ORIGINATOR – COMPANY:

_____

ORIGINATOR – CONTACT INFORMATION:

_____

PROPOSAL PREPARER - NAME:

_____

PROPOSAL PREPARER – COMPANY:

_____

PROPOSAL PREPARER – CONTACT INFORMATION:

_____

I. APPLICATION INFORMATION – Including mixtures and adjuvants):

1. TRADE NAME(S):

_____

2. COMMON NAME(S)

   _____

3. EPA REGISTRATION NUMBER(S):

   _____

4. MANUFACTURER(S):

   _____

5. METHOD OF APPLICATION:

   _____

6. MAXIMUM RATE OF APPLICATION – AS STATED IN THE EIS:
   a. Pounds Active Ingredient or Acid Equivalent:

      _____

7. MAXIMUM RATE OF APPLICATION – AS STATED ON THE LABEL:
   a. Formulated Product:

      _____

   b. Pounds Active Ingredient or Acid Equivalent:

      _____

8. INTENDED RATE OF APPLICATION:
   a. Formulated Product:

      _____

   b. Pounds Active Ingredient or Acid Equivalent:

      _____

9. APPLICATION DATE(S):

   _____

10. NUMBER OF APPLICATIONS: _____

II. **PEST** [List specific pest(s) and reason(s) for the proposed application of the pesticide]:

_____

_____

_____

_____

III. DESIRED RESULTS OF THE APPLICATION – LINKED TO THE OBJECTIVES OF THE APPLICATION:

_____

_____

_____

_____

_____

_____

IV. APPLICATION SITE DESCRIPTION:

1. ESTIMATED NUMBER OF ACRES: _____
2. GENERAL DESCRIPTION (Describe land type or use, size, stage of growth of target species, soil characteristics, and any additional information that may be important in describing the area to be treated.)

_____

_____

_____

_____

_____

_____

_____

V. SENSITIVE ASPECTS AND PRECAUTIONS (Describe sensitive areas – marsh, endangered, threatened, candidate, and sensitive species habitat – and distance to application site. List measures to be taken to avoid impact to these areas):

_____

_____

_____

_____

_____

_____

_____

_____

VI. NON-TARGET VEGETATION (Describe potential immediate and cumulative impacts to non-target pests in project area as a result of the pesticide application. Identify any planned mitigation measures that would be employed – BE GENERAL, SPECIFICS DISCUSSED IN THE EA):

_____

_____

_____

_____

_____

_____

_____

VII. INTEGRATED PEST MANAGEMENT PRACTICES CONSIDERED IN THE OVERALL PROJECT :

_____

_____

_____

_____

_____

_____

_____

VIII. SIGNATURES:

1. Pesticide Use Proposal's Originator: _____

   Date: _____

   a. Company: _____
2. Certified Pesticide Applicator: _____ Date: _____

   a. License Number: _____

   b. Certifying Organization: _____
3. Field Office Pesticide/Noxious Weed Coordinator:

   _____ Date: _____

4. Field Office Manager:

   _____ Date: _____

5. BLM State Pesticide Coordinator:

   _____ Date: _____

6. Deputy State Director:

_____ Date: _____

- Concur or Approved
- Not Concur or Disapproved
- Concur or Approved With Modifications

  - Any changes (modifications) to this proposal by the State Pesticide Coordinator would be listed in an attached memo to the manager requesting approval from the Deputy State Director.

ATTACHMENT B
FOREST SERVICE PESTICIDE USE PROPOSAL (PUP) INSTRUCTIONS AND TEMPLATE

USDA Forest Service FS-2100-2 (date)

Instructions for Form FS-2100-2, Pesticide-Use Proposal (Forest Service 2013b)

AGENCY INFORMATION (Header)
Provide requested information.
OBJECTIVE (Block 1)
a) Project name and/or identifier – Include the local project name and/or identifying name such as the name of the relevant NEPA compliance document and date of decision. [Note–Environmental analyses (EA's and/or EIS's) may be cited within the Pesticide-Use Proposal for additional information.]
b) Specific target pest(s) – Identify target pest(s) by the common and scientific name. Also identify the life cycle stage for animals (adult, larva, etc.) or stage of growth for plants (pre-emergent, seedling, sapling, etc.) at the time of application. A table may be attached to list information for multiple targets.
c) Purpose – State exact purpose of pesticide use.
PESTICIDE PRODUCT(S) (Block 2)
a) Trade name – State the trade name(s) exactly as shown on container (e.g., Roundup Ultra, Tordon 22k, Sevin SL).
b) Formulation as purchased – State the formulation (liquid, dust, granule, pellet, emulsion, bait, solution (ready-to-use without dilution), gas, flakes, packets, etc.) of each pesticide product as purchased.
c) Restricted-use pesticide (yes/no) – Specify whether the pesticide is a restricted-use pesticide or not.
d) EPA registration number – State the EPA registration number from the pesticide label.
e) Common name of chemical(s) – State the common name (glyphosate, picloram, carbaryl, etc.) of active ingredient(s) as given on the pesticide label. When more than one pesticide active ingredient would be used during treatment of a single pest, list active ingredients separately by placing the word "and" between them to indicate the different pesticide names (e.g., aminopyralid and 2, 4-D). When alternative materials are proposed for the application, use the word "or" in listing the names.
f) AI, AE, IU, or PIB expressed as % or concentration – State the percentage (%) or concentration (lb/gal, oz/oz, etc.) of any active ingredient (AI), acid equivalent (AE), international units (IU), or polyhedral inclusion bodies (PIB) as shown on the pesticide label. For herbicides, report as acid equivalent rather than active ingredient when available. IU may be expressed as billion international units/gal for bacteria, and PIB may be expressed as billion polyhedral inclusion bodies/oz for viruses, as appropriate.
TYPE OF APPLICATION (Block 3)
a) Method – Indicate the specific method of application to be used (aerial, ground, aquatic, etc.).
b) Equipment – Indicate the specific type of equipment to be used such as backpack sprayer, helicopter, fixed-wing aircraft, mist blower, hydraulic sprayer, injector, packets, etc.
FIELD APPLICATION INFORMATION (Block 4)
a) Formulation of material to be applied – Indicate the pesticide material to be applied in the field (spray liquid, pellets, granules, dust, bait, gas, flakes, packets, etc.).
b) Planned application rate – Indicate the amount of liquid or dry material to be applied on a per unit area basis (gal/acre, lbs/acre, oz/1,000 ft_2, etc.). In general, calibration of liquid sprayers requires determination of the application rate in gallons per acre (GPA).

c) Dilution rate – Indicate the pesticide concentration to be applied in the field as the amount of concentrate to be mixed with a specified amount of diluent (e.g., 1 qt. Tordon 22K/25 gallons of total mix).
d) Diluent – Identify the material (water, oil, talc, etc.) that would be used to reduce the concentration of a pesticide formulation at the time of application.
e) Pounds of AI or AE per acre (or other applicable rate) – State the pounds of active ingredient (AI) or acid equivalent (AE) (specify which) to be applied on a per acre basis, unless some other unit is indicated on the label. If reporting acreage is not appropriate, indicate units used. If a pesticide for trees or brush is to be applied by aircraft or mist blower, express as pounds of AI or AE per acre. For outdoor spot applications, the rate of application should also be expressed in pounds of AI or AE per acre. For pesticide treatment of individual trees, the application rate for AI or AE is described as number of trees and rate per tree (or an equivalent measure).
Indoor applications of residual sprays may be expressed as gallons per 1,000 square feet (at whatever percent AI in the prepared spray) or simply as pounds AI per 1,000 square feet. For spraying pesticide on most indoor surfaces to the point of runoff, assume the rate to be 1 gallon of formulation per 1,000 square feet. If a dust is being used, express as ounces or pounds of AI in prepared dust per M (1,000) square feet. The AI rate of application for fumigants or indoor aerosols is expressed as pounds AI per M (1,000) cubic feet. Rodent baits should be given as ounces or pounds of AI in the prepared bait per bait station.
The rate of application of AI for pesticide treatments in water may be expressed in parts per million (ppm) or parts per billion (ppb). Specify whether ppm or ppb is by weight or volume.
f) Other pesticides being applied to proposed treatment site(s) – Indicate other pesticides currently being applied or would be applied to the same site(s) proposed for treatment within the same year (e.g., ongoing carbaryl treatment of trees in the same campground where invasive plants would be treated; pesticides applied under other Pesticide-Use Proposals within the same treatment area).
TREATMENT AREA DESCRIPTION (Block 5)
a) Targeted treatment area – Specify area(s) to be treated (wilderness area, stretch of river, grazing allotment, etc.).
b) State and county – Indicate State(s), county(ies), and any other geographic jurisdictions involved with the area(s) to be treated.
c) Site description – Provide information on the type of area (rangeland, tree nursery, etc.) to be treated and any specific parts or portions of the area that would be treated such as ditch banks, rights-of-way, etc. When applicable, specify whether the pesticide would be applied directly to water or near the water's edge (e.g., riparian area). State the distance to nearest surface water (lakes, streams, etc.) or wetland. Where applicable, indicate the general slope of the treated area(s). For aquatic applications, indicate water quality (hardness and pH) of treated water body if available or applicable.
d) Estimate of acres (or other unit) to be treated – Provide an estimate for acres to be treated, unless other units are otherwise applicable. When projects require repeat applications, estimate only those acres to be treated in the first application.
e) Number of applications – For projects that would require repeat applications within the same area, provide an estimate of the number of treatments that would be used per season.
f) Month(s) and year(s) of application – Indicate the month(s) and year(s) that applications are planned. If necessary, provide general season of treatment (e.g., spring, summer, or fall) or an estimate of the range of years for treatment (e.g., 2011 through 2019).
SENSITIVE AREAS (Block 6)
a) Special designated area (if applicable) – Identify any wilderness area, Research Natural Area (RNA), botanical area, or other similar designated area that is in proximity to areas to be treated.

Describe specific precautionary measures that would be taken to protect identified special designated area (e.g., no pesticide application with mechanical ground equipment inside wilderness area).
b) Areas to be avoided – Identify specific areas to be protected from direct application, drift, or runoff (waterbodies, private property, T&E species habitat, etc.). Describe specific precautionary measures that would be taken to avoid presence of pesticide in identified area (e.g., no application within 100 feet of stream).
c) Areas to be treated with caution – Identify sensitive areas (riparian areas, areas with a shallow water table, T&E species habitat, etc.) that require special precautions during treatment to avoid undue impacts or contamination. Describe specific precautionary measures that would be taken to protect identified area (e.g., use of pesticides with an aquatic label in riparian areas).
PROJECT IMPLEMENTATION (Block 7)
a) Trained/certified personnel to be used – Provide information regarding personnel who would be performing the actual pesticide work. Applicators and personnel serving as supervisors must be trained in the proper application of pesticides. Personnel handling or applying a restricted-use pesticide must be state or Federally certified for restricted-use pesticide operations.
b) Personal safety – State any restricted entry interval (REI) required by the pesticide label following application. If additional personal protection equipment other than what is on the label is proposed, please describe.
c) State and local coordination – Indicate any coordination at the State or local level that would be made for the project.
d) Best management practices – Describe or reference the best management practices that would be followed for pesticide application such as lowest effective application rate, equipment calibration, field scouting/monitoring before pesticide application, buffer zones, and weather restrictions (wind speed limit, inversion avoidance, etc.).
e) Monitoring – Describe monitoring required for treatment effectiveness and any other monitoring that would be conducted.
f) Additional project information – Describe other information pertinent to the project that is not addressed in sections above (e.g., information as to whether the project would be conducted by force account or through a contract).
REVIEWER(S) (Block 8)
a) Pesticide use coordinator – A pesticide use coordinator's signature at the district, forest, or regional level (as appropriate) is required before final approval.
b) Other reviewers (as necessary) – Include any necessary signature(s) of specialists in pertinent programs such as biologists, entomologists, agronomists, wilderness program managers, or Research Natural Area (RNA) program managers that are required before final approval.
APPROVAL (signature of approving official) (Block 9)
SIGNATURE OF APPROVING LINE OFFICER WITH DELEGATED SIGNING AUTHORITY

PESTICIDE-USE PROPOSAL (REFERENCE FSM 2150) (FOREST SERVICE 2013C) TO COMPLETE THIS FORM, SEE INSTRUCTIONS FOR FORM FS-2100-2, PESTICIDE-USE PROPOSAL				
AGENCY/ COOPERATOR	CONTACT NAME, PHONE NUMBER, AND E-MAIL	REGION	FOREST/ DISTRICT	DATE SUBMITTED
1) OBJECTIVE A) PROJECT NAME AND/OR IDENTIFIER B) SPECIFIC TARGET PEST(S) C) PURPOSE		A) B) C)		
2) PESTICIDE PRODUCT(S) A) TRADE NAME B) FORMULATION AS PURCHASED C) RESTRICTED-USE PESTICIDE (YES/NO) D) EPA REGISTRATION NUMBER E) COMMON NAME OF CHEMICAL(S) F) AI, AE, IU, OR PIB EXPRESSED AS % OR CONCENTRATION		A) B) C) D) E) F)		
3) TYPE OF APPLICATION A) METHOD B) EQUIPMENT		A) B)		
4) FIELD APPLICATION INFORMATION A) FORMULATION OF MATERIAL TO BE APPLIED B) PLANNED APPLICATION RATE C) DILUTION RATE D) DILUENT E) POUNDS OF AI OR AE PER ACRE (OR OTHER APPLICABLE RATE) F) OTHER PESTICIDES BEING APPLIED TO PROPOSED TREATMENT SITE(S)		A) B) C) D) E) F)		
5) TREATMENT AREA DESCRIPTION A) TARGETED TREATMENT AREA B) STATE AND COUNTY C) SITE DESCRIPTION D) ESTIMATE OF ACRES (OR OTHER UNIT) TO BE TREATED E) NUMBER OF APPLICATIONS F) MONTH(S) AND YEAR(S) OF APPLICATION		A) B) C) D) E) F)		
6) SENSITIVE AREAS A) SPECIAL DESIGNATED AREA (IF APPLICABLE) B) AREAS TO BE AVOIDED		A) B) C)		

C) AREAS TO BE TREATED WITH CAUTION	
7) PROJECT IMPLEMENTATION A) TRAINED/CERTIFIED PERSONNEL TO BE USED B) PERSONAL SAFETY C) STATE AND LOCAL COORDINATION D) BEST MANAGEMENT PRACTICES E) MONITORING F) ADDITIONAL PROJECT INFORMATION	A) B) C) D) E) F)
8) REVIEWER(S) SIGNATURE(S) A) PESTICIDE USE COORDINATOR DATE: B) OTHER REVIEWER(S) (AS NECESSARY) DATE:	
9) APPROVAL (SIGNATURE OF APPROVING OFFICIAL) DATE:	

APPENDIX O
FRAMEWORK OPERATIONS AND MAINTENANCE PLAN

TABLE OF CONTENTS

O1.0 INTRODUCTION 1

O2.0 PLAN PURPOSE 1

O3.0 PLAN UPDATES 2

O4.0 OPERATION AND MAINTENANCE 2

O4.1 ROUTINE (PREVENTATIVE) MAINTENANCE 3
O4.2 CORRECTIVE MAINTENANCE 4

O5.0 EMERGENCY SITUATIONS 5

O6.0 ACCESS ROAD MANAGEMENT 5

O7.0 ENVIRONMENTAL MITIGATION MEASURES 6

O7.1 VEGETATION MANAGEMENT 6
O7.2 NOXIOUS WEED CONTROL 7
O7.3 RESTORATION AND REVEGETATION 7
O7.4 FIRE PROTECTION 7
O7.5 EMERGENCY NOTIFICATION PROCEDURES 7
O7.6 PROTECTION MEASURES FOR SENSITIVE ENVIRONMENTAL RESOURCES 8

O8.0 O&M PLAN HISTORY 8

O9.0 REFERENCES 10

TABLES:

TABLE O1 O&M CONTACT LIST 8

ACRONYMS

Applicant	TransWest Express LLC, also TransWest
ATV	all-terrain vehicle
BA	Biological Assessment
BE	Biological Evaluation
BLM	Bureau of Land Management
BO	Biological Opinion
EMM	Environmental Mitigation Measure
ERO	electric reliability organization
FEIS	Final Environmental Impact Statement
FERC	Federal Energy Regulatory Commission
NERC	North American Electric Reliability Corporation
NTP	Notice to Proceed
O&M Plan	Operations and Maintenance Plan, also Plan
O&M	Operations and Maintenance
Plan	Operations and Maintenance Plan, also O&M Plan
POD	Plan of Development
Project	TransWest Express Transmission Project, also TWE Project
ROD	Record of Decision
ROW	right-of-way
TransWest	TransWest Express LLC, also Applicant
TWE Project	TransWest Express Transmission Project, also Project
USFS	United States Forest Service
WECC	Western Electricity Coordination Council

O1.0 INTRODUCTION

This framework Operations and Maintenance Plan (O&M Plan or Plan) is proposed by TransWest Express LLC (TransWest or Applicant) for conducting routine, corrective, and emergency operation and maintenance (O&M) activities for the TransWest Express Transmission Project (TWE Project or Project). O&M activities are required to comply with North American Electric Reliability Corporation's (NERC) and Western Electric Coordinating Council (WECC) reliability and service requirements.

NERC is a not-for-profit international regulatory authority whose mission is to ensure the reliability of the bulk power system in North America. NERC develops and enforces Reliability Standards; annually assesses seasonal and long-term reliability; monitors the bulk power system through system awareness; and educates, trains, and certifies industry personnel. NERC's area of responsibility spans the continental United States, Canada, and the northern portion of Baja California, Mexico. NERC is the electric reliability organization (ERO) for North America, subject to oversight by the Federal Energy Regulatory Commission (FERC) and governmental authorities in Canada. NERC's jurisdiction includes users, owners, and operators of the bulk power system, which serves more than 334 million people.

The ERO's key programs, which impact more than 1,900 bulk power system owners and operators, are based on four pillars of continued success:

- Reliability – to address events and identifiable risks, thereby improving the reliability of the bulk power system.
- Assurance – to provide assurance to the public, industry, and government for the reliable performance of the bulk power system.
- Learning – to promote learning and continuous improvement of operations and adapt to lessons learned for improved bulk power system reliability.
- Risk-based Approach – to focus attention, resources, and actions on issues most important to bulk power system reliability.

In 2007, FERC approved agreements by which NERC delegates its authority to monitor and enforce compliance to eight Regional Entities. The members of the Regional Entities come from all segments of the electric industry: investor-owned utilities; federal power agencies; rural electric cooperatives; state, municipal and provincial utilities; independent power producers; power marketers; and end-use customers. WECC is the Regional Entity for the TWE Project operating area.

NERC and WECC develop and maintain reliability standards and ensure compliance and enforcement of these standards amongst all Bulk-Power System owners, operators, and users with NERC-approved Reliability Standards. The TWE Project will be part of the Bulk-Power System and TransWest as the owner and operator will need to comply with these standards. NERC and WECC have compliance and enforcement programs that include registration procedures, compliance audits, and a process to review and issue sanctions and ensure mitigation of any violations of the mandatory reliability standards.

O2.0 PLAN PURPOSE

This Plan is intended to ensure the following:

- Compliance with NERC and WECC reliability and service requirements;
- Compliance of O&M activities with applicable state and federal laws and policies;
- Consistency across and within federal jurisdictions;
- Access to the transmission line and ancillary facilities to implement the necessary O&M activities in a timely, cost effective and safe manner; and
- Impacts to the environment are avoided where practicable or are minimized.

This Plan provides an overview of methods to be implemented if the need for O&M activities is required under emergency conditions. This document discusses the existing support structure, chain of command, and emergency communication protocols to be used.

O3.0 PLAN UPDATES

This Plan will be updated for the Record of Decision (ROD) Plan of Development (POD) based on preliminary engineering and design for the selected Agency Preferred Alternative. Applicable wildlife timing and use restrictions affecting O&M activities will be completed for the transmission line segments and other facilities. This Plan will be updated for the Notice to Proceed (NTP) POD as necessary based on detailed final engineering and as agreed to by TransWest and the agencies.

O4.0 OPERATION AND MAINTENANCE

TransWest will perform a number of activities to keep transmission lines operational and in good repair. Most of these activities, such as routing patrols, inspections or scheduled maintenance are planned in advance. However, there will be an occasional need for emergency response in cases where public safety and property are threatened, to prevent imminent damage to the transmission line and ancillary facilities, or to restore service in the event of an outage.

Routine, corrective and emergency response activities will be conducted in accordance with this O&M Plan. TransWest will notify BLM Field Offices of routine and corrective maintenance activities; however, prior approval will not be necessary Exceptions where prior notification and approval are required are described in Section O5.0. Maintenance activities outside of the right-of-way (ROW), outside of established service and access roads or other Project related ancillary facilities, or that are not identified in this Plan will not be conducted until approved by the agencies. An exception to this would be when emergency action/maintenance is needed which requires some outside ROW work to be completed to ensure reliable power to customers.

Typical schedules and equipment used for the O&M activities are provided below. However, additional vehicles and equipment may be necessary depending on the terrain, site access and necessary maintenance work. Work may also be conducted outside of the typical schedule; schedule changes may occur as a result of weather, manpower, equipment availability, budgets and other factors.

Maintenance activities planned in advance will be conducted in accordance with the seasonal and spatial wildlife restrictions described in the Avian Protection Plan (Appendix B) and the Wildlife and Plant Conservation Measures Plan (Appendix X). Seasonal spatial restrictions may include sensitive big game ranges, known raptor and eagle nest buffers, and greater sage-grouse lek buffers. Operations

required during emergency repair situations will not be subject to identified seasonal avoidance areas and buffers.

O4.1 Routine (Preventative) Maintenance

Routine maintenance activities are ordinary maintenance tasks conducted on a regular basis to identify and repair any deficiencies. The work performed is typically repair or replacement of individual components (no new ground disturbance) performed by relatively small crews using a minimum of equipment. These activities do not damage vegetation or soil outside of the ROW, do not adversely impact sensitive resources, including special status species, waters of the U.S. and cultural resources, and do not require land manager approval. Personnel are generally present in any one area for less than one day.

The following are examples of routine maintenance activities:

- Semi-annual aerial patrols from a helicopter to inspect for structural and conductor defects, conductor clearance problems and hazardous trees.

- Routine ground patrols to inspect structural and conductor components. Such inspections generally require either an all-terrain vehicle (ATV) or pickup and possibly additional support vehicles traveling on access roads and may rely on either direct line-of-sight or binoculars. In some cases, the inspector may walk the ROW. Patrols are typically conducted in the spring and fall. Follow-up maintenance is scheduled depending on the severity of the problem, either as soon as possible or as part of routine scheduled maintenance.

- Climbing surveys may be necessary to inspect hardware or make repairs. Personnel generally access these structures by pickup, ATV or on foot.

- Structure or conductor maintenance typically occurs from a bucket truck (low reach), bucket truck (high reach), or man lifts. The maintenance vehicle may be located on or off a road, and no grading is typically necessary to create a safe work area.

- Cathodic protection surveys to check the integrity and functionality of the anodes and ground beds. These surveys typically require personnel to use an ATV or pickup and make brief stops.

- Routine cyclical vegetation clearing to trim or remove tall shrubs and trees to ensure adequate ground-to-conductor clearances. Vegetation clearing cycles vary from 3 to 10 years or as needed (depending upon the vegetation present). Personnel generally access the area by pickup, ATV or on foot; use chainsaws to clear the vegetation; and typically spend less than half a day in any one area. In some cases vegetation may be cleared using mechanical means.

- Removal of individual trees or snags (hazard trees) that pose a risk of falling onto conductors or structures and causing outages or fires. Personnel generally access hazard trees by truck, ATV or by foot from an access road and cut them with a chainsaw or similar tool. Any felled trees or snags are left in place as sources of large woody debris or as previously directed by the land management agency. Felled green trees are limbed to reduce fire hazard.

- Wood poles are periodically treated to retard rotting and structural degradation. Wood poles may be used for the ground electrode 34.5 kV lines on this Project. Personnel typically access structures by pickup, ATV or on foot; inspect and test (including the subsurface) the poles;

and then treat them by injecting preservatives into the poles if required. Wood pole inspections and treatments generally occur on a 10-year cycle.

- Routine road maintenance, such as blading (as needed) to improve road surface conditions and drainage, or removing minor physical barriers, such as rocks and debris. All initial road maintenance is performed by field crews which typically use ATVs, pickups, chainsaws and hand tools. Trees and brush are cut off at grade to minimize damage to vehicles. Slash, deadfall and boulders are placed at the edge of the road or down slope of the road bed, depending on site topography, to serve as a filtering windrow to minimize erosion and sedimentation. Smaller vegetation (e.g., grasses) is left in the road bed unless it is too tall, hinders access or could be construed as a fire hazard to O&M vehicles.

- Vegetation removal may be required on access roads to allow the necessary clearance for access and provide for worker safety. Field crews access the service roads by pickup or ATV and use chainsaws and hand tools to clear the vegetation. Where practicable and feasible, mechanical methods may be used.

- The relocation or removal of bird problem nests posing imminent fire or outage risk. The Avian Protection Plan in Appendix B provides information and agency coordination requirements regarding problem nests.

- Noxious weed control and vegetation management activities that include the use of herbicides. Herbicide use is based on agreements with the landowner or federal land management agency for the parcel in question and the chemicals used are agreed to in advance. The Noxious Weed Management Plan in Appendix N provides additional information concerning noxious weed management.

O4.2 Corrective Maintenance

Corrective maintenance activities are relatively large-scale efforts that occur infrequently, may result in more extensive vegetation clearing or earth movement and may include rehabilitation seeding and associated activities (e.g., measures to control noxious weeds). Personnel are generally present in any one location or area for a prolonged time, generally more than one day. The following are examples of corrective maintenance:

- Non-cyclical vegetation clearing to remove saplings or larger trees in the ROW.

- Structure or conductor maintenance in which earth must be removed.

- Road maintenance involving erosion control, water drainage installation or repair (such as culverts or rock crossings), road rehabilitation after major disturbances such as slumping or a storm event), or other road maintenance requiring heavy equipment (not including routing grading).

- Follow-up restoration activities, such as seeding, noxious weed control and erosion control.

- Conductor repair or replacement, which requires the use of several types of trucks and equipment and grading to create a safe work area to hang and pull the conductor into place.

O5.0 EMERGENCY SITUATIONS

Emergency situations are those conditions that may result in imminent or direct threats to public safety or threaten or impair TransWest's ability to provide reliable transmission service to its customers. Emergency situations may include:

- Failure of conductor splices.
- Damage to structures or conductors from wildfire, high winds, ice or other weather-related conditions.
- Line or system outages or fire hazards caused by trees falling onto conductors.
- Breaking or imminent failure of cross-arms or insulators, which could, or causes conductor failure.
- Damage to structures or conductors from vandalism.
- Serious personal injury.

In case of an emergency where life or substantial property is at risk or there is a potential or actual interruption in service, TransWest will promptly respond to the emergency and conduct any and all activities, including emergency repair requiring heavy equipment access to the structures or other ancillary facilities, needed to remedy the emergency and will implement feasible and practicable environmental mitigation measures (EMMs). The Emergency Preparedness and Response Plan in Appendix F outline the protocols and procedures for emergency situations.

O6.0 ACCESS ROAD MANAGEMENT

Transmission line access roads that are necessary for the operation and maintenance of transmission lines, structures or ancillary facilities, will be maintained by TransWest in a safe, useable condition, as directed by an authorized officer from the appropriate land management agency or private landowner. These roads are not part of the public backbone access network.

During routine operations, vehicular access will be needed to reach each structure for periodic inspections and maintenance and to areas of forest or tall shrubs to control vegetation in the ROW for safe operation. When practicable, TransWest plans to employ live-line maintenance techniques on the transmission line to minimize the requirement for outages. Live line maintenance and repair techniques require the utilization of high-reach bucket trucks and other trucks and equipment. Roads required as routine access roads for the operational life of the Project will be revegetated following construction but will not be recontoured; they would be maintained free of trees and shrubs for a minimum eight foot width. TransWest will coordinate with the local BLM FOs, USFS offices, counties and private landowners on a case-by-case basis regarding access requirements (including low water crossings) for operation and maintenance of the Project.

For non-routine maintenance requiring access by larger vehicles, the full width of the access road may be used. Roads would be repaired, as necessary, but would not be routinely graded. In order to preserve the ability to enter rapidly, the road structure (cuts and fills) would be left in place. In an emergency (i.e., in the event of a tower or conductor failure) full emergency access, including cranes and other heavy equipment, will be needed. Based on historical reliability of the structure types

proposed, it is anticipated that only a small fraction of the structure sites will require emergency access over the life of the Project.

Other roads making up the backbone access network may be used by TransWest during operations. However, these roads will not be maintained by TransWest except as noted. These include:

- Public roads, including state highways and county roads. These roads are for public use and the appropriate state or county entity maintains them.
- Open roads on federal land. The appropriate federal agency (Bureau of Land Management [BLM] or United States Forest Service [USFS]) maintains these roads, which are open to the public. These roads, including drainage features, cuts and fill slopes, would be repaired by TransWest if damaged during O&M activities but not maintained on a routine basis.
- Closed roads on federal land. These roads are still needed for administrative or emergency functions, but they have been closed to the public because of management policies to protect natural resources or reduce maintenance costs. If utilized during O&M activities, TransWest would assume some maintenance responsibilities proportionate to their use for O&M purposes.

TransWest would typically perform two types of road maintenance activities: 1) vegetation and debris clearing to maintain safe access; and 2) repairs using heavy equipment. Roads are inspected generally every three to six years and repairs are made as necessary. Typically, a small crew uses hand tools to cut small brush and trees (greater than 12 inches tall); remove dead-fall and debris; and repair and replace signs on access and service roads. Crews also prepare an inventory of road damage that will require ground disturbance (e.g., repair of a failed bank), and repair work is scheduled accordingly (typically the following year). Inspections and maintenance are typically conducted from spring through summer, when roads are clear of snow. TransWest would report these activities to the agencies as specified in the right-of-way grants or special use authorizations.

TransWest will implement the O&M environmental mitigation measures when maintaining roads and follow the seasonal restrictions by time and location for sensitive wildlife resources as described in the Wildlife and Plant Conservation Measures Plan (Appendix X). Applicable wildlife resources and seasonal restrictions will be determined based on the selected Agency Preferred Alternative and additional information provided by the Final Environmental Impact Statement (FEIS), Biological Opinion (BO), Biological Assessment (BA), Biological Evaluation (BE), and agency consultation. Location specific seasonal restrictions for the Project will be updated in the ROD POD and NTP POD.

O7.0 ENVIRONMENTAL MITIGATION MEASURES

O&M activities are planned to minimize impacts to the environment. EMMs will be implemented by TransWest during routine and corrective O&M activities and, to the extent possible, during emergency situations.

O7.1 Vegetation Management

A ROW Preparation and Vegetation Management Plan is located in Appendix R and includes O&M activities for vegetation within the ROW.

O7.2 Noxious Weed Control

Maintenance vehicles, ATVs and equipment have the potential to transport weed seeds from one area to another via dirt and debris that inadvertently collects on equipment. TransWest will implement the O&M environmental mitigation measures described in the Noxious Weed Management Plan (Appendix N).

O7.3 Restoration and Revegetation

The Reclamation Plan (Appendix Q) and Noxious Weed Management Plan (Appendix N) ensure appropriate reclamation and revegetation is implemented and to prevent accidental introduction or transport of noxious weeds along the ROW.

O7.4 Fire Protection

Fire regulations on federally managed lands are generally in effect between April 1 and October 31, and at other times with unusual weather conditions. O&M activities will follow the requirements and procedures specified by the appropriate federal or state agency when conducted on federal or state lands as well as those identified in the Fire Protection Plan (Appendix H).

TransWest is responsible for inspecting the transmission lines for fire hazards. When working during fire season, TransWest and/or their contractor(s) will carry the following suppression tools and equipment:

- All power-driven equipment shall be equipped with one fire extinguisher that is rated at a minimum as ABC-10 pound and one “D” handled or long handled round point shovel, size “O” or larger;
- Each motor patrol, truck and passenger-carrying vehicle shall be equipped with a double-bit axe or Pulaski, 3.5 pounds or larger; and
- Each internal combustion engine shall be equipped with a spark arrester that meets the federal land managing agency’s standards.

TransWest and the federal or state land manager will work cooperatively to evaluate request for Industrial Fire Precaution Level Waivers that would allow TransWest and/or their contractor(s) to continue working when certain fire restrictions are in place.

Continuous operation of the transmission lines is necessary for the supply of electric service to customers and to provide stability to the entire interconnected western U.S. transmission system. Therefore, the agencies will use their best efforts to avoid using fire suppression techniques that could take the lines out of service. TransWest will be notified of any and all fire suppression efforts or prescribed burns that could come into close proximity (two miles) with the transmission lines prior to initiating those efforts.

O7.5 Emergency Notification Procedures

If TransWest becomes aware of an emergency situation that is caused by a fire on or threatening federal or state land that could damage the transmission lines or their operation, they will notify the appropriate federal contact. Likewise, if the federal or state land manager becomes aware of an emergency situation that is caused by a fire on or threatening federal or state land and that could damage the transmission lines or their operation, it will notify TransWest.

O7.6 Protection Measures for Sensitive Environmental Resources

TransWest has taken a thorough, systemic approach in providing protection for sensitive environmental resources, including special status plants and wildlife, aquatic resources, and sensitive cultural resources. TransWest will implement the mitigation measures described in the protection plans listed below for protection of sensitive environmental resources during routine and corrective O&M activities.

- Appendix B – Avian Protection Plan
- Appendix D – Cultural Resources Protection and Management Plan
- Appendix N – Noxious Weed Management Plan
- Appendix P – Paleontological Resources Management and Mitigation Plan
- Appendix W – Water Resources Protection Plan
- Appendix X – Wildlife and Plant Conservation Measures Plan

If an emergency occurs and access is immediately needed, the appropriate federal agency will be notified as soon as possible. Depending on the urgency, the agency may not have responded until after the repair work has begun. Timing restrictions may not be adhered to, but the other measures listed above will be followed to the extent possible.

O8.0 O&M PLAN HISTORY

The O&M Plan is a living document and changes are anticipated over the life of the Project. This Plan and its updates will be distributed to the appropriate BLM and USFS field offices. Table O1 will be completed for the ROD POD based on the selected Agency Preferred Alternative.

In addition, the following items will become part of this section of the O&M Plan:

- List of road closures and gate locations.
- Maps containing known locations of sensitive plant and animal species mapped as “sensitive areas” without specifying the resource.
- Known locations of cultural features mapped as “sensitive areas” without specifying the resource.

TABLE O1 O&M CONTACT LIST

DEPARTMENT/ROLE	CONTACT NAME	TELEPHONE	CELL PHONE	EMAIL
		Wyoming BLM		
Rawlins Field Office				
		Colorado BLM		
Little Snake Field Office				
White River Field Office				

DEPARTMENT/ROLE	CONTACT NAME	TELEPHONE	CELL PHONE	EMAIL
		Utah BLM		
Vernal Field Office				
Price Field Office				
Salt Lake Field Office				
Richfield Field Office				
Fillmore Field Office				
Cedar City Field Office				
St. George Field Office				
		Nevada BLM		
Caliente Field Office				
Las Vegas Field Office				
		U.S. Forest Service		
Ashley National Forest				
Uinta National Forest				
Manti-La Sal National Forest				
Dixie National Forest				

O9.0 REFERENCES

AECOM. 2011. Memorandum: Characteristics of Land Cover Crossed by TransWest Transmission Project Alternative Corridors Draft. Fort Collins, Colorado. February 2011.

American National Standards Institute, Inc. (ANSI). 2006. ANSI, A300 (Part 7) - 2006. Tree, Shrub, and Other Woody Plant Maintenance – Standard Practices (Integrated Vegetation Management a. Electric Utility Rights-of-way). Washington, D.C. February 2006.

Bramble, W.C., W.R. Brynes and R.J. Hutnik. 1985. Effects of a Special Technique for Right-of-Way Maintenance on Deer Habitat. Journal of Arboriculture. 11:278-284.

_____. 1986. Effects of a Special Technique for Right-of-Way Maintenance on an Avian Population. Journal of Arboriculture. 12: 219-226.

Miller, Randall. 2007. International Society of Arboriculture's Best Management Practices: Integrated Vegetation Management.

North American Electric Reliability Corporation (NERC). 2009. Transmission Vegetation Management Standard FAC-003-2 Technical Reference. Princeton, New Jersey. September 2009.

APPENDIX P
FRAMEWORK PALEONTOLOGICAL RESOURCES MANAGEMENT AND MITIGATION PLAN

TABLE OF CONTENTS

P1.0 INTRODUCTION 1
P2.0 PLAN PURPOSE 1
P3.0 PLAN UPDATES 1
P4.0 REGULATORY FRAMEWORK 1
P5.0 POTENTIAL FOSSIL YIELD CLASSIFICATION 2
P6.0 PALEONTOLOGICAL TREATMENT 4
P7.0 REFERENCES 5

ACRONYMS

Applicant	TransWest Express LLC, also TransWest
BLM	Bureau of Land Management
BMP	Best Management Practice
CRS	Colorado Revised Statute
DEIS	Draft Environmental Impact Statement
EIS	Environmental Impact Statement
FEIS	Final Environmental Impact Statement
FLPMA	Federal Land Policy and Management Act
GIS	geographic information system
NEPA	National Environmental Policy Act of 1969
NTP	Notice to Proceed
PFYC	Potential Fossil Yield Classification
Plan	Paleontological Resources Management and Mitigation Plan, also PRMMP
POD	Plan of Development
PRMMP	Paleontological Resources Management and Mitigation Plan, also Plan
Project	TransWest Express Transmission Project, also TWE Project
PRPA	Paleontological Resource Preservation Act
TransWest	TransWest Express LLC, also Applicant
TWE Project	TransWest Express Transmission Project, also Project

P1.0 INTRODUCTION

This framework Paleontological Resources Management and Mitigation Plan (PRMMP or Plan) identifies the process that will be followed by TransWest Express LLC (TransWest or Applicant) and its Construction Contractor(s) to identify sensitive paleontological resources, develop measures to mitigate impacts to those sensitive resources, and implementation and reporting of those measures for the TransWest Express Transmission Project (TWE Project or Project).

Paleontological resources are the remains or traces of once-living organisms preserved in rocks or sediment. These fossils include bones, teeth, soft tissue, shells, leaves, wood, footprints, burrows, and microscopic remains found in geological deposits within which they were originally buried. The fossil record is the only direct evidence that life on Earth has existed for more than 3.6 billion years. Fossils are important scientific and educational resources because they are used to: (1) study evolutionary relationships, (2) understand fossil preservation, (3) interpret ancient environments and changes in climate, (4) determine the relative geologic age of rocks, (5) study the past geographic distribution of organisms, and (6) study the patterns and processes of evolution, extinction, and speciation. Fossils are considered non-renewable resources because the organisms they represent no longer exist. Information concerning the type of paleontological resources found in the TWE Project area and the potential for the Project to affect these resources can be found in the Environmental Impact Statement (EIS).

P2.0 PLAN PURPOSE

The purpose of the framework Plan is to assist TransWest and its Construction Contractor(s) and those regulatory agencies with the responsibility for protecting paleontological resources in the planning, design, and construction of the Project. The PRMMP identifies the process that will be followed to identify sensitive resources, develop measures to mitigate impacts to those sensitive resources, implementation of those measures, and reporting. Prior to issuance of any Notices to Proceed (NTP) with construction, the steps outlined for the identification of sensitive resources and mitigation measures will need to be completed and the PRMMP updated.

P3.0 PLAN UPDATES

Based on detailed final engineering and design and appropriate pre-construction surveys for the selected Agency Preferred Alternative, an updated Plan will be completed with the NTP Plan of Development (POD). The Construction Contractor will be responsible for preparing and implementing the final Plan in compliance with local, state, and federal regulations pertaining to paleontological resources.

P4.0 REGULATORY FRAMEWORK

Federal and state legislation, regulatory compliance, and professional standards applicable to paleontological resources in the Project area include:

- National Environmental Policy Act (NEPA)
- Federal Land Policy and Management Act (FLPMA)
- Paleontological Resources Preservation Act (PRPA)
- Colorado Revised Statute (CRS) 24-80-401-411

- Utah State Code 63-73-11 through 63-73-19
- Nevada Revised Statutes 381.195 – 381.227

P5.0 POTENTIAL FOSSIL YIELD CLASSIFICATION

The Potential Fossil Yield Classification (PFYC) system is a measure of the likelihood of impacting fossil resources in a given area based on the occurrence of fossil-bearing geological units. This system predicts the probability of finding paleontological resources in a given area using geological maps of sufficient scale and detail. The numerical nature of the PFYC system also allows for ease of importation into a geographic information system (GIS), further facilitating the planning and management decision-making process. The five-part PFYC system, as defined by the Bureau of Land Management (BLM) (2008), is explained below.

Class 1 – Very low potential: Geological units not likely to contain recognizable fossil remains. Units that are igneous or metamorphic, excluding reworked volcanic-ash units. Units that are Precambrian in age. The probability for impacting any fossils is negligible. Assessment or mitigation of paleontological resources is usually unnecessary. The occurrence of significant fossils is nonexistent or extremely rare.

Class 2 – Low potential: Sedimentary geological units not likely to contain vertebrate fossils or scientifically significant non-vertebrate fossils. Vertebrate or significant invertebrate or plant fossils not present or very rare. Units that are generally younger than 10,000 years before present. Recent eolian deposits. Deposits that exhibit significant physical and chemical changes (i.e., diagenetic alteration). The probability for impacting vertebrate fossils or scientifically significant invertebrate or plant fossils is low. Assessment or mitigation of paleontological resources is not likely to be necessary. Localities containing important resources may exist, but would be rare and would not influence the classification. These important localities will be managed on a case-by-case basis and assessment or mitigation may be unnecessary except in rare or isolated circumstances.

Class 3 – Moderate or **unknown potential:** Fossiliferous sedimentary geological units where fossil content varies in significance, abundance, and predictable occurrence or sedimentary units of unknown fossil potential. Commonly marine in origin with sporadic known occurrences of vertebrate fossils. Vertebrate fossils and scientifically significant invertebrate and plant fossils known to occur intermittently and predictably known to be low. Poorly studied and/or poorly documented. Potential yield cannot be assigned without ground reconnaissance.

***Class 3a* – Moderate potential:** Units are known to contain vertebrate fossils or scientifically significant invertebrate or plant fossils, but these occurrences are widely scattered. Common invertebrate or plant fossils may be found in the area and opportunities may exist for hobby collecting. The potential for a project to be sited on or impact a significant fossil locality is low, but the potential is somewhat higher for common fossils.

***Class 3b* – Unknown potential:** Units exhibit geological features and preservational conditions that suggest significant fossils could be present, but little information about the paleontological resources of the unit or the area is known. This may indicate the unit or area is poorly studied, and field surveys may uncover significant fossils. The units in this class may eventually be placed in another class when sufficient surveying and research is performed. The unknown potential of the units in this class should be carefully considered when developing any mitigation or management plans.

This classification includes a broad range of paleontological potential. It includes geological units of unknown potential, as well as units of moderate or infrequent occurrence of fossil resources. Management considerations cover a broad range of options as well and could include pre-construction surveys, monitoring, or avoidance. Ground disturbing activities will require sufficient assessment to determine where significant paleontological resources occur in the area of the proposed action and whether the action could affect the paleontological resources. These units may contain areas that would be appropriate to designate as hobby-collecting areas due to the higher occurrence of common fossils and lower concern about affecting significant paleontological resources.

Class 4 – High potential: Geological units containing a high occurrence of significant fossils. Vertebrate fossils or scientifically significant invertebrate or plant fossils are known to occur and have been documented but may vary in occurrence and predictability. Ground-disturbing activities may adversely affect paleontological resources in many cases.

***Class 4a* – High potential:** Units exposed with little or no soil or vegetative cover. Outcrop areas are extensive, with exposed bedrock areas often larger than two acres. Paleontological resources may be susceptible to adverse impacts from ground-disturbing actions. Illegal collecting activities may impact some areas.

***Class 4b* – High potential:** These are areas underlain by geological units with high potential but have lowered risks of human-caused adverse impacts and/or lowered risk of natural degradation due to moderating circumstances. The bedrock unit has high potential, but a protective layer of soil, thin alluvial material, or other conditions may lessen or prevent potential impacts to the bedrock resulting from the activity. Areas of exposed outcrop are smaller than two contiguous acres. Outcrops form cliffs of sufficient height and slope so impacts are minimized by topographic conditions. Other characteristics are present that lower the vulnerability of both known and unidentified paleontological resources.

The probability for impacting significant paleontological resources is moderate to high, and is dependent on the proposed action. Mitigation considerations must include assessment of the disturbance, which may include removal or penetration of the protective surface alluvium or soils, potential for future accelerated erosion, or increased ease of access resulting in greater looting potential. If impacts to significant fossils can be anticipated, on-the-ground surveys prior to authorizing the ground-disturbing action will usually be necessary. On-site monitoring or spot-checking may be necessary during construction activities. Management prescriptions for resource preservation and conservation through controlled access or special management designation should be considered. Class 4 and 5 units may be combined as Class 5 for broad applications, such as planning efforts or preliminary assessments, when geological mapping at the appropriate scale is not available. Resource assessment, mitigation, and other management considerations are similar at this level of analysis, and impacts and alternatives can be addressed at a level appropriate to the application.

Class 5 – Very high potential: Highly fossiliferous geological units that consistently and predictably produce vertebrate fossils or scientifically significant invertebrate or plant fossils and are at risk of human-caused adverse impacts or natural degradation.

***Class 5a* – Very high potential:** Units are exposed with little or no soil or vegetative cover. Outcrop areas are extensive with exposed bedrock areas commonly larger than two contiguous acres. Paleontological resources are highly susceptible to adverse impacts from ground-disturbing activities. Unit is frequently the focus of illegal collecting activities.

***Class 5b* – Very high potential:** These are areas underlain by geological units with very high potential but have lowered risks of human-caused adverse impacts and/or lowered risk of natural degradation due to moderating circumstances. The bedrock unit has very high potential, but a protective layer of soil, thin alluvial material, or other conditions may lessen or prevent potential impacts to the bedrock resulting from activity. Outcrops form cliffs of sufficient height and slope so impacts are minimized by topographic conditions. Other characteristics are present that lower the vulnerability of both known and unidentified paleontological resources.

The probability of impacting significant fossils is high to very high. Vertebrate fossils or scientifically significant invertebrate fossils are known or can be reasonably expected to occur in the impact area. On-the-ground surveys prior to authorizing any ground disturbing activities or land use adjustments will usually be necessary. On-site monitoring may be necessary during construction activities. Mitigation will often be necessary before and/or during these actions. Official designation of areas of avoidance, special interest, and concern may be appropriate.

P6.0 PALEONTOLOGICAL TREATMENT

TransWest has committed to the following Design Features and Best Management Practices (BMPs) as identified in the Draft EIS (DEIS):

TWE-38: If paleontological resources are known to be present in the Project area, or if areas with a high potential to contain paleontological material has been identified through the NEPA process and Draft and Final EIS (FEIS), the Applicant will prepare a Paleontological Monitoring and Mitigation Plan as part of the NTP POD.

TWE-39: Paleontological mitigation may be required in areas of greatest disturbance and areas likely to have significant fossils. Preconstruction surveys of such areas may be conducted as agreed upon by the land managing and lead federal agency.

The following steps indicate how the above design features will be implemented for the treatment of paleontological resources:

1. Conduct paleontological pre-construction field survey and report.

2. Develop a PRMMP.

3. Undertake resource data recovery (if required) and monitoring as prescribed in the PRMMP.

4. Prepare report documenting the results of the monitoring and additional investigations that were required.

The pre-construction field survey shall be undertaken by a qualified paleontologist(s) within those PFYC Class 4 or Class 5 areas identified in the FEIS. The survey will examine existing rocks and sediment exposures. The survey will confirm and augment geological mapping, locate and collect any significant paleontological resources exposed at the surface, and assess paleontological potential with more precision. The results of the pre-construction survey will be presented in a report that will be provided to the appropriate regulatory agencies.

Based on the results of the pre-construction field survey, a final PRMMP will be developed. This Plan will specifically identify any specimens that require data recovery prior to construction, identify those portions of the Project area where monitoring for paleontological resources should be conducted

during construction, and describe the procedures to be followed in the event of an unanticipated discovery. The PRMMP will also outline a working training program, curation requirements, and reporting.

P7.0 REFERENCES

Bureau of Land Management (BLM). 2008. Potential Fossil Yield Classification (PFYC) System. Instruction Memorandum No. 2008-009.

APPENDIX Q
FRAMEWORK RECLAMATION PLAN

TABLE OF CONTENTS

Q1.0 INTRODUCTION 1

Q1.1 PURPOSE 1
Q1.2 RECLAMATION GOALS AND OBJECTIVES 1
Q1.3 PLAN UPDATES 4

Q2.0 SURFACE-DISTURBING ACTIVITIES 5

Q3.0 SOIL MANAGEMENT 5

Q3.1 SOIL HANDLING 5
Q3.2 LANDSCAPE RECONSTRUCTION 5

Q4.0 RIGHT-OF-WAY RECLAMATION 6

Q4.1 EROSION CONTROL 6
Q4.2 SEEDBED PREPARATION 6
Q4.2.1 Seeding Methods 6
Q4.2.2 Seed Mixes 6
Q4.3 WEED MANAGEMENT 7

Q5.0 MONITORING AND REPORTING 7

Q5.1 MONITORING ACTIVITIES 7
Q5.2 REPORTING 8

Q6.0 REFERENCES 8

ACRONYMS

ACEC	Area of Critical Environmental Concern
Applicant	TransWest Express LLC, also TransWest
BA	Biological Assessment
BE	Biological Evaluation
BLM	Bureau of Land Management
BMP	Best Management Plan
BO	Biological Option
DEIS	Draft Environmental Impact Statement
FEIS	Final Environmental Impact Statement
FO	Field Office
NPS	National Park Service
NTP	Notice to Proceed
OHV	off-highway vehicle
Plan	Reclamation Plan
POD	Plan of Development
Project	TransWest Express Transmission Project, also TWE Project
Reclamation	Bureau of Reclamation
ROD	Record of Decision
TransWest	TransWest Express LLC, also Applicant
TWE Project	TransWest Express Transmission Project, also Project
USFS	United States Forest Service

Q1.0 INTRODUCTION

Q1.1 Purpose

TransWest Express LLC (TransWest or Applicant) has prepared this framework Reclamation Plan (Plan) for the TransWest Express Transmission Project (TWE Project or Project) to outline reclamation goals and objectives and the reclamation process, including soil management, site preparation, revegetation, monitoring, and reporting. This Reclamation Plan for the TWE Project provides an overview of the reclamation goals and standards that will be used to ensure successful reclamation of disturbed areas created by the Project. The reclamation procedures outlined in this document describe the methodologies, monitoring, and reporting requirements for reclaiming disturbances associated with the Project.

This Reclamation Plan describes the framework for the development of a final Reclamation Plan that will be a part of the Plan of Development (POD) provided with the Notice to Proceed (NTP). Final reclamation plan(s) will be developed by the Construction Contractor(s) based on the final selected location of all Project facilities and will be submitted to the appropriate agency prior to the issuance of the construction NTP. Final reclamation plan(s) are intended to be adaptive to changing conditions and technologies, and the federal Authorized Officer(s) will have discretion to update, modify, or change the procedures should it be deemed warranted due to site conditions or other factors.

The Project area contains federal lands administered by the Bureau of Land Management (BLM), U.S. Forest Service (USFS), National Park Service (NPS), and Bureau of Reclamation (Reclamation) ("federal lands"); state lands under the management of various state land boards and management agencies (the "state lands"); and private lands. The Reclamation Plan and the procedures and standards outlined herein will apply to federal lands within the Project area. While the preference will be to use the procedures and standards of the Reclamation Plan throughout the Project area, specific reclamation techniques, standards, and schedules on private lands and state lands may vary and will be developed in coordination with private landowners, state land boards or state management agencies.

Q1.2 Reclamation Goals and Objectives

Reclamation objectives emphasize eventual ecosystem reconstruction to maintain a safe and stable landscape and meet the desired outcomes of the land use plan, which means returning the land to a condition approximate to or better than pre-disturbance conditions. For purposes of this Reclamation Plan, reclamation is defined as the rehabilitation of a disturbed area to make it acceptable for designated use. Reclamation objectives include initial stabilization and long-term reclamation to ensure biophysical conditions are maintained in the short term to achieve the long-term goals of revegetation and ecosystem reconstruction.

To achieve long-term reclamation, interim reclamation may be necessary to maintain viable, healthy ecosystems until decommissioning. Interim reclamation will likely be used on stabilized areas that may be re-disturbed during operation and maintenance. Interim reclamation goals and objectives include maintaining active topsoil, establishing erosion control measures, and minimizing habitat, visual resource, and forage loss. Final, long-term reclamation will take place on all surfaces that will not be disturbed during operations and maintenance activities, as well as during decommissioning of all areas.

Table Q1 provides the best management practices (BMPs) and mitigation measures identified in the Draft Environmental Impact Statement (DEIS) which may be applicable to this Plan. These BMPs

and mitigation measures have not been finalized at this time and may be updated, changed, or eliminated as the Plan is further developed.

TABLE Q1 APPLICABLE AGENCY SPECIFIC MEASURES IDENTIFIED IN THE DEIS

MEASURE CATEGORY	RECLAMATION BMP, DESIGN FEATURES, AND STATE AND BLM FIELD OFFICE-SPECIFIC STIPULATIONS, AND FOREST STANDARDS AND GUIDELINES
West-wide Energy Corridor	
General	GEN-1, GEN-3, GEN-7, GEN-12, GEN-14
Soils, Excavation, and Blasting	SOIL-1, SOIl-2, VEG-1, SOIL-3, SOIL-4
Mitigation and Monitoring	MIT-1
Surface and Groundwater Resources	WAT-7, WAT-9, WAT-10, WAT-11
Ecological Resources	ECO-1, ECO-2, ECO-4
Visual Resources	VIS-7
Public Health and Safety	PHS-3, PHS-7
Air Emissions	AIR-1
Restoration	REST-1, REST-2
Applicant Committed Environmental Mitigation Measures	
General Design Features (general, environmental training)	TWE-4
Project Design, Access, and Construction (general ROW, visual, access, vegetation management, restoration, erosion control, soils, clean-up)	TWE-10, TWE-11, TWE-13, TWE-14, TWE-15
Geology and Soils (drainage and soil control)	TWE-19
Groundwater, Surface Water, and Wetlands (water quality)	TWE-20, TWE-21, and TWE-22
Vegetation and Soils Management (vegetation management)	TWE-27
Ecological Resources (ecological, special status species and habitats)	TWE-33
Cultural Resources – Historic, Archeological, and Tribal Traditional (general, cultural)	TWE-37
Land Use and Visual Resources (land use, agriculture, ranching, access, gates)	TWE-41, TWE-43
Public Health and Safety (worker health and safety)	TWE-56
Hazardous Materials, Waste, and Wastewater Management (\ waste management)	TWE-60
Fire Protection	TWE-64
Additional Mitigation Measures Prescribed for the TWE Project	
Soil Resources	S-1, S-2, S-3, S-4, S-5, S-6, S-8, S-9, S-11, S-13, S-14, VG-1, VG-3, VG-4
Special Status Plant Species	SS-5, SS-6

MEASURE CATEGORY	RECLAMATION BMP, DESIGN FEATURES, AND STATE AND BLM FIELD OFFICE-SPECIFIC STIPULATIONS, AND FOREST STANDARDS AND GUIDELINES
Special Status Wildlife Species	SSWS-10
Special Status Aquatic Species	SSS-2, SSS-3, SSS-4
Land Use	RANGE-4, RANGE-6
Special Designations	SDA-2, SDA-4
Wyoming BLM Field Offices	
BLM Rawlins FO	OHV use limited to designated roads and vehicle routes.
BLM Rawlins FO	Surface disturbance avoided on unstable areas.
Colorado BLM Field Offices	
BLM Little Snake FO	Surface disturbing activities would be allowed on isolated sites that meet fragile soil criteria, under certain circumstances.
BLM White River FO	Surface occupancy not permitted on soils identified as unstable and subject to slumping.
BLM White River FO	Surface disturbing activities not permitted on fragile soils on slopes >35 percent, or saline soils derived from Manco shale without appropriate plan and approval by Area Manager.
BLM White River FO	Habitats having Blue Mountain Deciduous Browse/Aspen/Serviceberry/Chokecherry Communities may be prohibited, but if allowed would be avoided to the extent possible and use of special restoration measures to promote recovery.
BLM White River FO	To protect outstanding scenic and natural landscape values at select areas (VRM Class II and III), if construction is permitted, special design and reclamation measures may be implemented including transplanting trees and shrubs, fertilization, mulching, special erosion control structures, irrigation, site recontouring, low profile equipment, and painting to reduce visual contrasts.
BLM White River FO	Special restoration measures must be implemented for loss of prairie dog habitat.
Utah BLM Field Offices	
BLM Fillmore FO	All land disturbed by new ROW except authorized new access roads shall be rehabilitated to as close to natural conditions as possible.
BLM Price FO and BLM Vernal FO	If surface disturbance cannot be avoided on slopes of 21-40%, a plan would be required which includes an erosion control strategy, GIS modeling, survey by certified engineer, and adhere to surface operating standards in the BLM Gold Book (USDI and USDA 2007). For slopes >40%, there would be no surface occupancy unless there is a plan and a detailed analysis (e.g. Order I soil survey by soil scientist) finds that conditions would allow occupancy while adequately protecting area from accelerated erosion.
BLM Richfield FO	Avoid routing through areas with slopes of 30% or greater. If avoidance is not practical, an erosion control strategy, reclamation and site plan with detailed survey by certified engineer are required. Avoid soils having high potential for wind erosion.
BLM Richfield FO	Wetlands would additional measures, such as no surface

MEASURE CATEGORY	RECLAMATION BMP, DESIGN FEATURES, AND STATE AND BLM FIELD OFFICE-SPECIFIC STIPULATIONS, AND FOREST STANDARDS AND GUIDELINES
	occupancy areas, erosion control strategies, mitigation to protect surface from rutting, compaction, and displacement, and disruption of surface and subsurface function, mitigation or restoration measures to restore hydrologic function to site, survey requirements and design by certified engineer.
BLM Salt Lake FO	Avoid lands with slopes >30%. Surface disturbance only allowed on fragile soils with slopes >35% with appropriate engineering plan.
Utah National Forests	
Ashley NF	Would obtain at least 80% of original ground cover within five years after project completion
Ashley NF	Maintain adequate downed material and standing snags for wildlife habitat as identified below: Aspen: 70% of maximum population potential or 1.3 snags/acre Douglas-fir: 50% of maximum population potential or 1 snag/acre Lodgepole pine: 40% of maximum population potential or 0.7 snag/acre (Spruce-Alpine fir) Ponderosa pine: 80% of maximum population potential or 2.7 snags/acre Riparian (any species): 70% of maximum population potential or 1.3 snags/acre
Manti-La Sal NF	Manage down timber to provide habitat for wildlife and manage to provide at least two logs per acre in timber habitat types.
Manti-La Sal NF	Prompt restoration must be assured for approved activities.
Manti-La Sal NF	Obliterate and rehabilitate temporary roads within one season after planned use ends.
Manti-La Sal NF	Minimize significant soil compaction and disturbance in riparian ecosystems. Allow use of heavy construction equipment during period when soils are less susceptible to compaction or rutting.
Nevada BLM Field Offices	
BLM Las Vegas FO	In Mormon Mesa and Rainbow Garden ACECs for critical desert tortoise habitat, the following is required: reclamation to pre-disturbance conditions within reasonable timeframe, which may include salvage and transplant of cactus and yucca, recontouring of area, scarification of compacted soil, soil amendments, seeding and transplant of seedling shrubs. Subsequent revegetation measures may be required if monitoring indicates not successful the first time.
BLM Las Vegas FO	Reclamation of temporary roads required in ACECs.

ACEC = Area of Critical Environmental Concern; FO = Field Office; BLM = Bureau of Land Management; BMP = Best Management Practice; OHV = off-highway vehicle

Q1.3 Plan Updates

The reclamation plan(s) will be updated for the Record of Decision (ROD) POD based on the Agency Preferred Alternative, and BMPs and mitigation measures identified in the Final Environmental Impact Statement (FEIS), Biological Assessment (BA), Biological Opinion (BO), Biological Evaluation (BE), and through consultation with federal and state agencies. Updates in the ROD POD

may include defined noxious weed areas, defined reclamation zones per region/line segment, applicable mitigation, pre-construction requirements, and post-construction monitoring.

The reclamation plan(s) will be updated as required for the Final NTP POD based on the final engineering and design and results of pre-construction field surveys. The updated reclamation plan(s) will outline actions to be applied by TransWest and its Constructions Contractor(s) during reclamation planning, reclamation and post-construction monitoring.

Q2.0 SURFACE-DISTURBING ACTIVITIES

Project surface-disturbing activities will be described in the NTP POD. Pre-disturbance assessments will provide the baseline information needed for construction planning. The NTP POD will include a Project layout, location and detail of surface-disturbing activities, and design documentation. This information will be used to determine specific reclamation techniques and reclamation timing for different disturbance elements and locations. Based on the level of disturbance, final reclamation standards and a monitoring schedule will be determined for each surface-disturbing activity. Soil stabilization will begin immediately following construction followed by interim reclamation.

Q3.0 SOIL MANAGEMENT

Soil is constantly being weathered through biological processes, which develops the structure and function essential in sustaining vegetation communities and providing wildlife habitat. Thus, maintaining soil structure and function is critical for successful reclamation efforts. As described in the Framework Access Road Siting and Management Plan (Appendix A) TransWest will use existing roads and overland access (“drive and crush”) whenever practicable to avoid or reduce the need for reclamation. Where practicable, topsoil will be separated and handled differently than subsoil layers. Topsoil will be salvaged during construction to use for site preparation and to support future reclamation efforts. Soils on federal lands will be managed using measures approved by the appropriate federal agency. While the preference will be to use the same soil management practices on private lands and state lands, specific soil management practices on private lands and state lands may vary and will be developed in coordination with private landowners, state land boards or state management agencies as appropriate.

Q3.1 Soil Handling

A critical component of reclamation is to maintain the biological, chemical, and physical integrity of the soil resource by establishing a series of guidelines for the proper handling of topsoil and subsoil. For each surface-disturbing activity, topsoil, and in some instances subsoil, will be salvaged and stockpiled. Components of soil handling will include the identification, erosion protection, placement, and incorporation of salvaged soil stockpiles.

Q3.2 Landscape Reconstruction

Surface runoff and erosion control in areas exposed to surface-disturbing activities will be accomplished by reconstructing the landscape and maintaining soil stability. The landscape will be reconstructed to achieve a desired topography, slope stability, and surface stability, to the extent possible. Water courses and drainage features will be reconstructed, where practicable, to maintain the drainage pattern, profile, and dimension to approximate the natural features and hydrologic characteristics of pre-disturbance characteristics. Surface stability will be controlled by maintaining soil physical properties and treating compacted surfaces with accepted technologies.

Q4.0 RIGHT-OF-WAY RECLAMATION

Reclamation restores the disturbed area by recreating the physical characteristics that approximate the landscape features of adjacent areas and pre-disturbance conditions. Components of reclamation include landscape reconstruction, site preparation and revegetation. Disturbed areas on federal lands will be revegetated in accordance with agency-approved measures and seed mixtures.

Q4.1 Erosion Control

Erosion control measures will be implemented to avoid and minimize impacts from surface-disturbing activities. Erosion control measures will be installed prior to and immediately following surface-disturbing activities. Initial stabilization measures will be used to control surface runoff and erosion and to ensure biophysical conditions are maintained until long-term reclamation can be initiated. Long-term erosion control measures will be established with an overriding goal of revegetation and ecosystem reconstruction.

Immediately following surface-disturbing activities, temporary runoff and erosion control measures will be implemented where necessary to ensure soil stabilization. Measures may include mulching and netting of biodegradable blankets stapled firmly to the soil surface, applying sediment control, respreading scalped vegetation, and constructing water bars, diversion ditches, sediment fences, and energy dissipaters. Specific measures will be determined based on site-specific conditions.

Following soil stabilization, long-term measures will be applied to further stabilize disturbed areas and control surface runoff and erosion to meet reclamation standards. Long-term erosion control measures may include constructing sediment trapping devices, sediment filtering devices, water bars and revegetation of disturbed areas.

All runoff and erosion control structures will be inspected and properly maintained until the desired vegetation is established and soil stability is attained at the reclaimed area. Substandard or ineffective structures will be evaluated and replaced.

Q4.2 Seedbed Preparation

The primary objective of revegetation is to establish the species composition, diversity, structure, and ground cover appropriate for the desired plant community. Seedbed preparation maximizes seeding efficiency and improves reclamation success and includes topsoil replacement, discing, and surface roughening techniques. Compacted areas will be treated with the most appropriate methods and technologies to improve soil aeration, water infiltration, and root penetration. Soil conditioning and amendments may be necessary to ameliorate poor topsoil and subsoil quality.

Q4.2.1 Seeding Methods

Following seedbed preparation, seed will be applied using a broadcast spreader, drill, and/or hydroseeder depending on site conditions and seed mix. Seeding will be done after ground-disturbing activities are complete and at the appropriate time of year (preferably in the fall or, if fall is not an option, the spring). TransWest will coordinate with the applicable BLM Field Office to determine the appropriate time of year for seeding. If there is a lag time between the end of ground-disturbing activities and seeding, appropriate erosion control measures will be implemented.

Q4.2.2 Seed Mixes

Proper seeding mixtures will be used to reclaim disturbed areas on federal lands. According to established criteria, the seed mixture selection process for federal lands will consider agency-specific

pick lists, seed availability and price, growth form, seasonal variety, and prevailing dominant species. To increase the likelihood of successful reclamation, locally adapted native plant materials based on the site characteristics and ecological setting (i.e., the pre-disturbance site characterization) will be selected when possible.

Seed mixtures will be tailored to establish species diversity, composition, and ground cover appropriate for each desired plant community. Only approved, certified weed-free seeds will be used. The local land management agency (i.e., BLM Field Office) will approve the seed mix to be used on their respective land. The seed mixture will contain the following elements.

- Species composition and diversity for the desired plant community, ecological setting, and current soil properties.
- Dominant herbaceous species (native where practical) that support or augment the post-disturbance land uses, including species-specific wildlife habitat, rangelands, and other public uses.
- Full shrub and/or sub-shrub species when these species are available and will help achieve reclamation objectives while supporting post-disturbance land uses and/or wildlife habitat needs.
- Forb species (native where practical) or other agency or landowner-approved plant species, as appropriate for management objectives.

Q4.3 Weed Management

Noxious weed management for Project will occur as described in Appendix N of the POD, the "Noxious Weed Management Plan." The focus of noxious weed control efforts is to prevent the spread of new infestations resulting from Project activities.

Q5.0 MONITORING AND REPORTING

Reclamation monitoring will document the condition of reclaimed areas and reclamation progress across the Project. TransWest will conduct post-construction reclamation monitoring annually for a 2-year period or until reclamation goals are met following the conclusion of ground-disturbing activities.

Q5.1 Monitoring Activities

Reclamation monitoring will occur annually in accordance with agency specific requirements on federal lands. Vegetation will be evaluated against reclamation goals and objectives (Section 1.2). Successful revegetation will be determined by monitoring reclaimed areas against existing conditions. Species and relative density will be assessed annually and compared to baseline data collected prior to the start of ground-disturbing activities. Reclamation will be determined successful if vegetation has become established in the seeded areas and are demonstrating that they will, over time, achieve a distribution and diversity similar to pre-construction conditions. If after a second growing season problem areas have been identified (e.g., seed germination is lower than expected; prevalence of noxious-weed species), the area will be treated and re-seeded. Treatment may include additional seedbed preparation, control of noxious weeds, use of soil amendments, and/or use of another appropriate seed mix.

Q5.2 Reporting

TransWest will document pre-construction observations, construction reclamation activities, and post-construction monitoring on federally and state-managed lands in an annual report. Annual reports will be prepared for submittal to federal or state entities that administer federal lands in the Project area. The reports will provide a summary of Project reclamation activities and observations and include recommendations for additional corrective actions if necessary.

Q6.0 REFERENCES

Bureau of Land Management (BLM). 2013. TransWest Express Transmission Project. Draft Environmental Impact Statement. BLM Wyoming State Office and Western Area Power Administration. June 2013.

APPENDIX R
FRAMEWORK ROW PREPARATION AND VEGETATION MANAGEMENT PLAN

TABLE OF CONTENTS

R1.0 INTRODUCTION 1

R1.1 PLAN PURPOSE 1
R1.2 PLAN UPDATES 3
R1.3 AGENCY REGULATIONS 3
R1.3.1 All Lands 3
R1.3.2 Bureau of Land Management 3
R1.3.3 U.S. Forest Service 4
R1.3.4 National Park Service 4
R1.3.5 Bureau of Reclamation 4
R1.3.6 Utah Reclamation Mitigation and Conservation Commission 4
R1.4 APPROVED AREAS OF DISTURBANCE 4
R1.5 RESPONSIBLE PARTIES 4

R2.0 ROW PREPARATION ACTIONS 5

R2.1 ADDITIONAL PLANS 5

R3.0 VEGETATION MANAGEMENT 6

R3.1 PRESERVE IN PLACE 6
R3.2 PLANT SALVAGE 6
R3.3 VEGETATION CLEARING IN ROW 6
R3.3.1 Level 1 – Standard ROW Vegetation Management 7
R3.3.2 Level 2 – Selective ROW Wire-Border Zone Vegetation Management 13
R3.3.3 Level 3 – Selective ROW Clearance-Based Vegetation Management 18
R3.3.4 Project-Specific Measures Applicable to All Levels 20
R3.4 SLASH AND MULCH MANAGEMENT 27
R3.4.1 Lopping and Scattering 27
R3.4.2 Chipping 27
R3.4.3 Windrow Vertical Mulch 27
R3.4.4 Decking 27
R3.5 RECLAMATION 28

R4.0 ANNUAL WORK PLANS 28

R5.0 VEGETATION INSPECTIONS 28

R6.0 REPORTING 29

R7.0 REFERENCES 30

TABLES:

TABLE R1 AGENCY SPECIFIC MEASURES IDENTIFIED IN THE DEIS 1
TABLE R2 TWE PROJECT DEIS VEGETATION MANAGEMENT GUIDELINES BY VEGETATION LAND COVER TYPE 22

FIGURES:

FIGURE R1 LEVEL 1 STANDARD ROW VEGETATION MANAGEMENT – CROSS SECTION VIEW ... 8
FIGURE R2 LEVEL 1 STANDARD ROW VEGETATION MANAGEMENT – PROFILE VIEW ... 9
FIGURE R3 LEVELS 1, 2, AND 3 VEGETATION CLEARANCE ZONE FOR GUYED STEEL LATTICE TOWER ... 11
FIGURE R4 LEVELS 1, 2, AND 3 VEGETATION CLEARANCE ZONE FOR TUBULAR STEEL POLE AND SELF SUPPORTING STEEL LATTICE TOWER ... 12
FIGURE R5 LEVELS 2 AND 3 SELECTIVE ROW VEGETATION MANAGEMENT – CROSS SECTION VIEW ... 14
FIGURE R6 LEVEL 2 SELECTIVE ROW VEGETATION MANAGEMENT – WIRE ZONE PROFILE VIEW ... 16
FIGURE R7 LEVELS 2 AND 3 SELECTIVE ROW VEGETATION MANAGEMENT – BORDER ZONE PROFILE VIEW ... 17
FIGURE R8 LEVEL 3 SELECTIVE ROW VEGETATION MANAGEMENT – WIRE ZONE PROFILE VIEW ... 19

ACRONYMS

AC	alternating current
ACEC	Area of Critical Environmental Concern
Applicant	TransWest Express LLC, also TransWest
BA	Biological Assessment
BE	Biological Evaluation
BLM	Bureau of Land Management
BMP	Best Management Practice
BO	Biological Opinion
CFR	Code of Federal Regulations
CWA	Clean Water Act
DC	direct current
DEIS	Draft Environmental Impact Statement
ESA	Endangered Species Act of 1973
FEIS	Final Environmental Impact Statement
FLPMA	Federal Land Policy and Management Act of 1976
FO	Field Office
IRA	Inventoried Roadless Area
IVM	integrated vegetation management
kV	kilovolt
MVCD	Minimum Vegetation Clearance Distance
NEPA	National Environmental Policy Act of 1969
NERC	North American Electric Reliability Corporation
NF	National Forest
NPS	National Park Service
NTP	Notice to Proceed
OHV	off-highway vehicle
Plan	ROW Preparation and Vegetation Management Plan
POD	Plan of Development
Project	TransWest Express Transmission Project, also TWE Project
Reclamation	Bureau of Reclamation
ROD	Record of Decision
ROW	right-of-way
SDAs	Special Designated Areas
TransWest	TransWest Express LLC, also Applicant
TWE Project	TransWest Express Transmission Project, also Project
URMCC	Utah Reclamation Mitigation and Conservation Commission
USFS	United States Forest Service
VQO	Visual Quality Objective
VRM	Visual Resource Management

R1.0 INTRODUCTION

R1.1 Plan Purpose

The purpose of this framework Right-of-Way (ROW) Preparation and Vegetation Management Plan (Plan) is to describe and recommend vegetation management actions to be carried out by TransWest Express LLC (TransWest or Applicant) and its Construction Contractor(s) that would meet regulatory requirements for ROW clearing and maintenance, fuels management, and to support restoration actions for implementation of the Reclamation Plan (Appendix Q) for the TransWest Express Transmission Project (TWE Project or Project).

Table R1 provides the best management practices (BMPs) and mitigation measures identified in the Draft Environmental Impact Statement (DEIS) which may be applicable to this Plan. These BMPs and mitigation measures have not been finalized at this time and may be updated, changed, or eliminated as the Plan is further developed.

TABLE R1 AGENCY SPECIFIC MEASURES IDENTIFIED IN THE DEIS

MEASURE CATEGORY	VEGETATION MANAGEMENT BMP, DESIGN FEATURES, AND STATE AND BLM FO-SPECIFIC STIPULATIONS, AND FOREST STANDARDS AND GUIDELINES
West-wide Energy Corridor	
General	GEN-1, GEN-3, GEN-11
Mitigation and Monitoring	MIT-1
Ecological Resources	ECO-1
Visual Resources	VIS-7
Public Health and Safety	PHS-4, PHS-7
Applicant Committed Environmental Mitigation Measures	
General Design Features (general, environmental training)	TWE-4
Project Design, Access, and Construction (general ROW, visual, access, vegetation management, restoration, erosion control, soils, clean-up)	TWE-11, TWE-18
Vegetation and Soils Management (vegetation management)	TWE-26, TWE-27, TWE-28
Ecological Resources (ecological, special status species and habitats)	TWE-33
Cultural Resources – Historic, Archeological, and Tribal Traditional (general, cultural)	TWE-37
Land Use and Visual Resources (land use, agriculture, ranching, access, gates)	TWE-42
Public Health and Safety (worker health and safety)	TWE-51, TWE-56
Hazardous Materials, Waste, and Wastewater Management (waste management)	TWE-60
Fire Protection	TWE-64
Additional Mitigation Measures Prescribed for the TWE Project	
Soil Resources	VG-2, VG-4

MEASURE CATEGORY	VEGETATION MANAGEMENT BMP, DESIGN FEATURES, AND STATE AND BLM FO-SPECIFIC STIPULATIONS, AND FOREST STANDARDS AND GUIDELINES
Visual Resources	VR-1
Special Designations	SDA-4
Colorado BLM Field Offices	
BLM White River Field Office	Habitats having Blue Mountain Deciduous Browse/Aspen/Serviceberry/Chokecherry Communities may be prohibited, but if allowed would be avoided to the extent possible and use of special restoration measures to promote recovery.
BLM White River Field Office	To protect outstanding scenic and natural landscape values at select areas (VRM Class II and III), if construction is permitted, special design and reclamation measures may be implemented including transplanting trees and shrubs, fertilization, mulching, special erosion control structures, irrigation, site recontouring, low profile equipment, and painting to reduce visual contrasts.
Utah BLM Field Offices	
BLM Vernal FO	For protection of Mexican spotted owl, eliminate access routes created by project by raking out scars, revegetation, and gating access points.
Wyoming BLM Field Offices	
BLM Rawlins Field Office	Off-highway vehicle use limited to designated roads and vehicle routes.
Utah National Forests	
Ashley NF	Maintain adequate downed material and standing snags for wildlife habitat as identified below: Aspen: 70% of maximum population potential or 1.3 snags/acre Douglas-fir: 50% of maximum population potential or 1 snag/acre Lodgepole pine: 40% of maximum population potential or 0.7 snag/acre (Spruce-Alpine fir) Ponderosa pine: 80% of maximum population potential or 2.7 snags/acre Riparian (any species): 70% of maximum population potential or 1.3 snags/acre
Ashley NF	Use logging systems and techniques capable of minimizing soil loss, compaction, and other resource impacts.
Ashley NF	Special harvesting techniques to protect riparian zones, such as directional felling and cable yarding, would be applied when needed to protect the riparian ecosystem. Prohibit landings and decking areas and limit temporary roads within riparian areas.
Dixie NF	Design and implement management activities to blend with the natural landscape. Do not go below Visual Quality Objectives (VQO) of modification. When project requires clearing of vegetation and/or soil disturbance, use irregular clearing edges and shaped to blend with the natural landscape.
Manti-La Sal NF	Manage down timber to provide habitat for wildlife and manage to provide at least two logs per acre in timber habitat types.
Uinta NF	Avoid removing sagebrush cover within 300 yards of foraging areas along riparian zones, meadows, lakebeds, and farmland.
Nevada BLM Offices	

MEASURE CATEGORY	VEGETATION MANAGEMENT BMP, DESIGN FEATURES, AND STATE AND BLM FO-SPECIFIC STIPULATIONS, AND FOREST STANDARDS AND GUIDELINES
BLM Las Vegas Field Office	In Mormon Mesa and Rainbow Garden ACECs for critical desert tortoise habitat, the following is required: reclamation to pre-disturbance conditions within reasonable timeframe, which may include salvage and transplant of cactus and yucca, recontouring of area, scarification of compacted soil, soil amendments, seeding and transplant of seedling shrubs. Subsequent revegetation measures may be required if monitoring indicates not successful the first time.

FO = Field Office; VQO = Visual Quality Objectives; BMP = best management practice; NF = National Forest; BLM = Bureau of Land Management; ACEC = Areas of Critical Environmental Concern

R1.2 Plan Updates

This framework Plan is based on Alternatives in the Final Environmental Impact Statement (FEIS) and will be updated for the Record of Decision (ROD) Plan of Development (POD) based on the selected Agency Preferred Alternative and preliminary design and engineering. For the Notice to Proceed (NTP) POD the Plan will be updated as needed based on detailed final design and engineering.

R1.3 Agency Regulations

Federal and state agency regulations are presented in the following sections. Additional regulations may apply where special management areas are crossed by the TWE Project. These will be identified in the updated Plan for the ROD POD.

R1.3.1 All Lands

Relevant regulations applicable to all lands include:

- Clean Water Act (CWA) Sections 303(d) and 404
- North American Electric Reliability Corporation (NERC) Reliability Standard, FAC-003-2 (NERC 2011, 2013)
- Endangered Species Act (ESA) of 1973, as amended Section 7(a)(2)

R1.3.2 Bureau of Land Management

Relevant regulations applicable to Bureau of Land Management (BLM) lands include:

- Federal Land Policy and Management Act (FLPMA) of 1976 Sec. 101(a)(8)
- BLM Integrated Vegetation Management Handbook H1740-2 (BLM 2008)
- BLM Terms and Conditions of Right-of-Way Grants and Temporary Use Permits 43 Code of Federal Regulations (CFR) Part 2881.2
- BLM Field Office Resource Management Plans

R1.3.3 U.S. Forest Service

Relevant regulations applicable to United States Forest Service (USFS) lands include:

- FLPMA Sec. 101(a)(8)
- Forest Service Manual 2000 Zero Code 2070 – Servicewide (USFS 2008)
- National Forest Resource Management Plans

R1.3.4 National Park Service

Relevant regulations applicable to National Park System (NPS) lands include:

- FLPMA Sec. 101(a)(8)
- NPS Director's Order 14 Resource Damage Assessment and Restoration Handbook (NPS 2003)
- NPS Resource Management Plans

R1.3.5 Bureau of Reclamation

Relevant regulations applicable to Bureau of Reclamation (Reclamation) lands include:

- FLPMA Sec. 101(a)(8)

R1.3.6 Utah Reclamation Mitigation and Conservation Commission

Relevant regulations applicable to Utah Reclamation Mitigation and Conservation Commission (URMCC) lands include:

- FLPMA Sec. 101(a)(8)

R1.4 Approved Areas of Disturbance

This Plan is applicable to the ROW; temporary work areas; access roads; and other facilities associated with the TWE Project. Any project-related ground disturbing activities outside these areas would require prior approval by the appropriate landowners or agencies. TransWest will document that appropriate cultural resources and biological surveys have been conducted, as determined necessary by the appropriate federal and state agencies. All construction activities outside of authorized areas are subject to all applicable survey and permit requirements, and landowner easement agreements.

R1.5 Responsible Parties

TransWest would have the overall responsibility of directing and monitoring vegetation management activities for the TWE Project. The Construction Contractor(s) may retain the services of a company that specializes in vegetation management to implement the protocols identified in this Plan during and following construction.

R2.0 ROW PREPARATION ACTIONS

The requirements for ROW Preparation will be determined based on information provided in the FEIS, Biological Assessment (BA), Biological Opinion (BO), Biological Evaluation (BE), and agency consultation, as well as terms and conditions contained within the ROW grant(s) or special use authorizations. Updated information on ROW Preparation will be included in the ROD POD version of this Plan. All actions described below are subject to change in future versions of this Plan.

ROW preparation typically includes general site preparation involving flagging of the ROW boundaries, temporary work areas, and exclusion areas. It also typically includes identification of plants to preserve in place, weed problem areas, salvage plants, and identification of storage areas for windrowed plant and soil materials. Monitoring would also be established during pre-construction activities, as described in the Reclamation Plan (Appendix Q). Pre-construction actions focus on protection of sensitive resources identified for preservation. Disturbance related to Project construction may begin after all ROW preparation and pre-construction actions have been completed. Pre-construction actions which may apply to the Project are described below.

R2.1 Additional Plans

This Plan is applicable to the construction of transmission structures, temporary work areas, staging areas, and access roads associated with the TWE Project. Any Project-related ground disturbing activities outside these areas would require prior approval by the appropriate land owners or agencies. TransWest would document that appropriate cultural resources and biological surveys have been conducted, as determined necessary by the appropriate federal and state agencies. As may be required in the ROW grant(s) or special use authorizations, all suitable habitat areas for ESA listed species, BLM sensitive, USFS sensitive, and state-listed species would be identified and marked with flagging or other appropriate means to avoid direct impacts during construction activities, as described in the Flagging, Fencing, and Signage Plan (Appendix I). All construction or reclamation activities outside of authorized areas are subject to all applicable survey and permit requirements and landowner easement agreements. All ROW preparation actions will be subject to stipulations identified in the following Protection Plans in the POD:

- Avian Protection Plan (Appendix B)
- Flagging, Fencing, and Signage Plan (Appendix I)
- Noxious Weed Management Plan (Appendix N)
- Reclamation Plan (Appendix Q)
- Stormwater Pollution Prevention Plan (Appendix T)
- Water Resources Protection Plan (Appendix W)
- Wildlife and Plant Conservation Measures Plan (Appendix X)

R3.0 VEGETATION MANAGEMENT

Procedures for vegetation management includes information on preserving existing vegetation to the degree possible, salvaging live plants, vegetation clearing, and salvaging dead or cut plants for mulching. These procedures are described further below.

R3.1 Preserve in Place

The Preserve in Place activity includes the preservation of existing vegetation to the degree possible to reduce visual impacts and/or if mature plant specimens are present to enhance habitat recovery and quality. This activity would be implemented in construction areas where recontouring is not required, wherever practicable and consistent with NERC standards, and the original contour would be maintained to avoid excessive root damage and allow for re-sprouting. Preservation of specimens may also be requested by the appropriate land management agency or recommended by the Construction Contractor(s) on a case-by-case basis. Eligible specimens would include mature trees and shrubs, succulents, or diverse vegetation groupings that would provide seed and a suitable microclimate for seedling germination. Flagging or fencing of specimens (e.g., Joshua trees) to be preserved would be done before ground is disturbed. The Construction Contractor(s) would ensure construction activities would not disturb the specimens. If it is determined that construction activity would be detrimental to the plant, then salvage should be considered if the specimen meets the qualifications described in Appendix Q - Reclamation Plan.

R3.2 Plant Salvage

Where required by the ROW grant(s) or special use authorizations, plants would be salvaged from the ROW and other areas in the Project footprint to the extent feasible so they can be replanted after construction activities are complete. Salvaged material would be replanted as soon as possible to avoid loss of plants. Salvaged material would be replanted in sites that match the original one to the extent possible to ensure adaptability. Plant salvaging and replanting is required in the Mormon Mesa and Rainbow Garden Areas of Critical Environmental Concern (ACECs) for Critical Desert Tortoise Habitat (BLM Las Vegas Field Office) and BLM White River Field Office. Specific methods for replanting salvaged plants are described in the Reclamation Plan (Appendix Q).

R3.3 Vegetation Clearing in ROW

NERC has established reliability standard FAC-003-2 to prevent vegetation related outages from occurring on bulk transmission systems, which could lead to cascading outages (NERC 2011). This mandatory standard was developed in response to serious outages and operational problems, which have resulted from interference between overgrown vegetation and transmission lines over the past 10 to 20 years. FAC-003-2 requires having and implementing a documented vegetation management program, designed to control vegetation on transmission ROWs. Vegetation management for the TWE Project is based on meeting NERC reliability requirements through the integrated vegetation management (IVM), which includes the wire–border zone approach to vegetation management (ANSI 2006; Ballard et al. 2007; NERC 2011). There would be three levels of ROW clearing within the TWE Project transmission line ROW, which are defined and described below.

- Level 1 – Standard ROW Vegetation Management
- Level 2 – Selective ROW Wire-Border Zone Vegetation Management
- Level 3 – Selective ROW Clearance-Based Vegetation Management

R3.3.1 Level 1 – Standard ROW Vegetation Management

Definition

The standard ROW vegetation management approach (Level 1) would entail initially clearing the ROW of all undesirable vegetation and managing the ROW to maintain the desired condition. The desired condition is characterized by stable, low growth plant communities, free of noxious or invasive plants. These communities would typically be comprised of herbaceous plants and low growing shrubs, ideally native to the local area. Vegetation heights would average three feet in height, and may range up to six feet. Accumulations of vegetation debris from intensive or repetitive vegetation treatments may require removal to reduce risks from wildfire and enhance the fire survivability of the transmission line. The density of remaining vegetation would be a consideration in assessing overall fire risk. Adequate access routes are required and must be maintained to provide for efficient, cost-effective vegetation treatment activities.

Application and Desired Condition

Level 1 is TransWest's desired condition for the majority of the TWE Project ROW. Level 1 represents the most effective way to meet and exceed the NERC standards in a cost-effective manner. Figures R1 and R2, illustrate the Level 1 desired conditions.

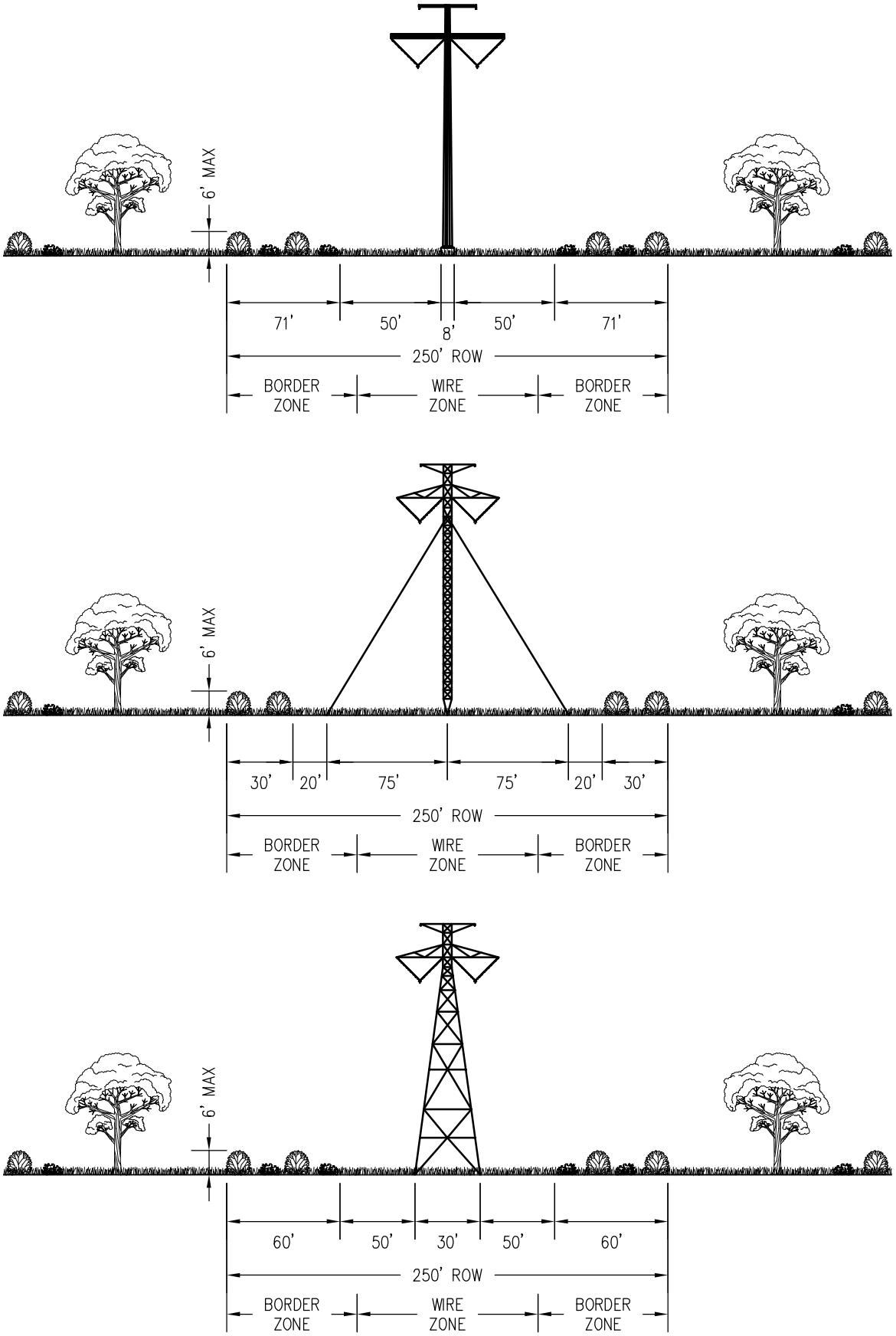

POWER ENGINEERS
www.powereng.com

TRANSWEST EXPRESS TRANSMISSION PROJECT

FIGURE R1

LEVEL 1 STANDARD ROW VEGETATION MANAGEMENT – CROSS SECTION VIEW

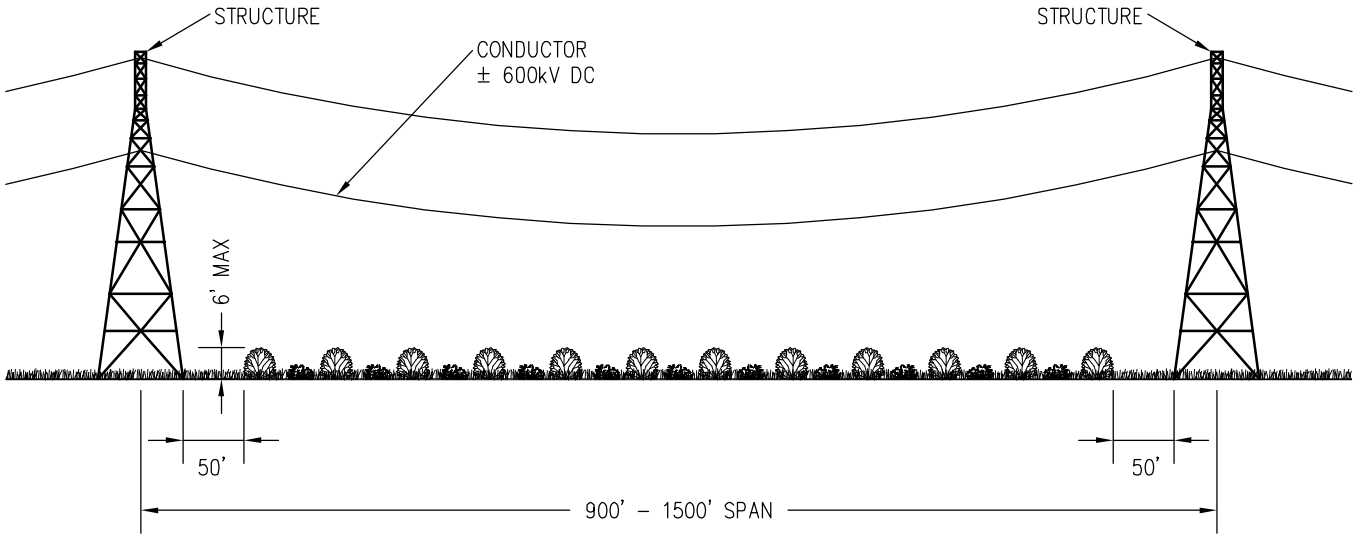

POWER ENGINEERS
www.powereng.com

TRANSWEST EXPRESS TRANSMISSION PROJECT

FIGURE R2

LEVEL 1 STANDARD ROW VEGETATION MANAGEMENT – PROFILE VIEW

Implementation

As part of construction, the clearing of the ROW and access roads would be accomplished in accordance with this Plan. As part of the ROW clearing, all danger trees would be identified and removed from the ROW. Where necessary, tree removal would be accomplished by cutting as near to the surrounding grade wherever possible, and would not exceed eight inches above grade when measured on the downhill side of the tree, and two inches on the uphill side of the tree (BLM 2008). All stumps would be left in place for erosion control. Low-growing trees, shrubs, and ground vegetation would be left in place to the extent possible. To the extent feasible, the Applicant would maintain adequate downed material for wildlife habitat. At ravine crossings with higher conductor clearances, more woody vegetation would be retained to the extent practical. Vegetation would be cleared at each tower location. Clearance zones would extend out 50 feet around self supporting lattice towers and single shaft tubular steel poles. The clearance zone for the guyed lattice towers would extend out 20 feet from the outline of the guy pattern. Figure R3 shows the extents of vegetation clearing planned for the guyed lattice towers. Figure R4 provides comparable information for the tubular steel pole and self supporting lattice towers. Shrubs and ground cover outside these tower clearance zones would be left in place to the extent possible. Slash would be removed from the Project site or respread according to Section R3.4 Slash and Mulch Management and the Reclamation Plan (Appendix Q).

During the life of the TWE Project, the ROW would be managed to retain the Level 1 desired condition in designated areas. During operation, the Applicant would be responsible for routine inspections of vegetation. Annual plans for the inspection and treatment of vegetation would be implemented. Vegetation would be removed using mechanical equipment such as chain saws, weed trimmers, rakes, shovels, mowers, and brush hooks. Clearing efforts in heavy growth areas would use equipment such as a Hydro-Ax or similar. The duration of activities, and the size of crew and equipment required, would depend on the amount and size of the vegetation to be trimmed or removed. In selected areas, herbicides may be used to control noxious weeds, as described in the Noxious Weed Management Plan (Appendix N). All herbicide applications would be performed in accordance with federal, state, and local regulations, and in compliance with appropriate land management agency or private landowner requirements.

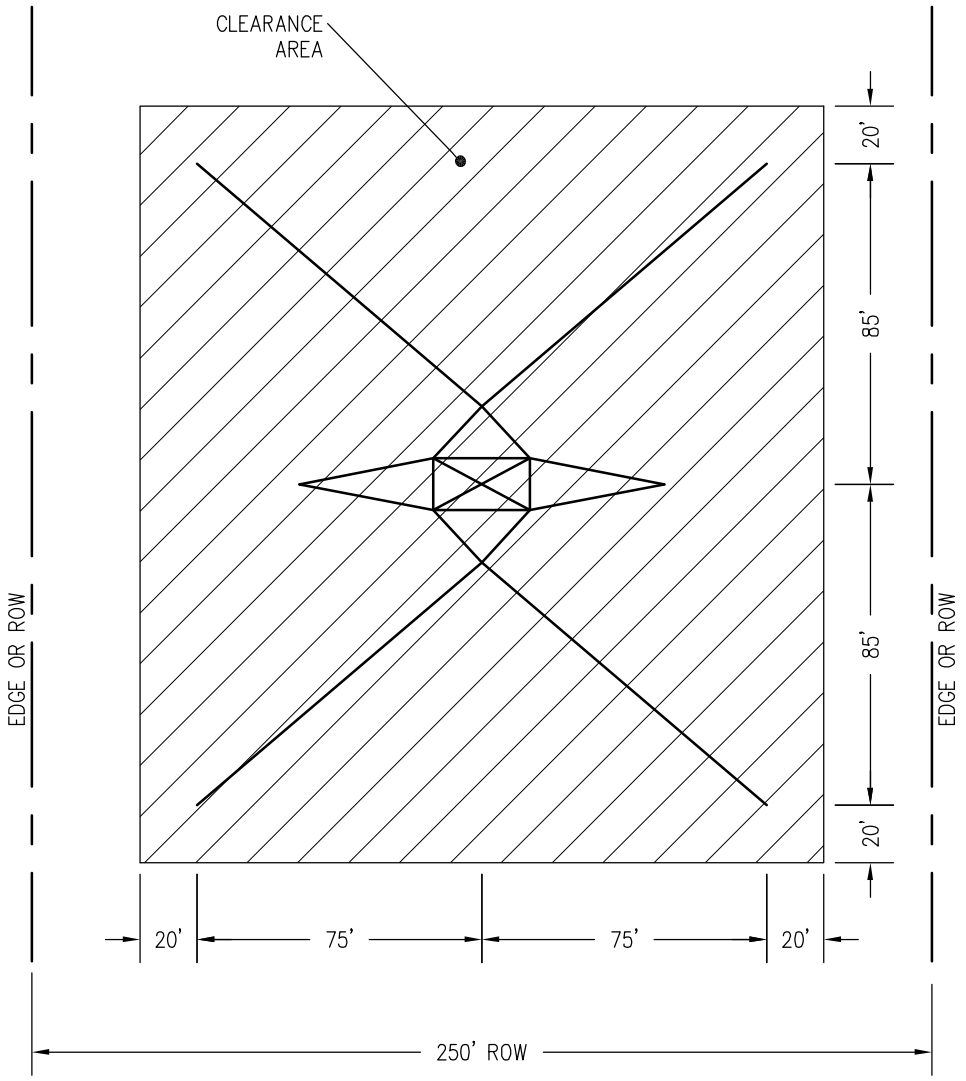

CLEARANCE ZONE FOR GUYED LATTICE TOWER

(TYPICAL)

POWER ENGINEERS
www.powereng.com

TRANSWEST EXPRESS TRANSMISSION PROJECT

FIGURE R3

LEVELS 1, 2, & 3 VEGETATION CLEARANCE ZONE FOR GUYED STEEL LATTICE TOWER

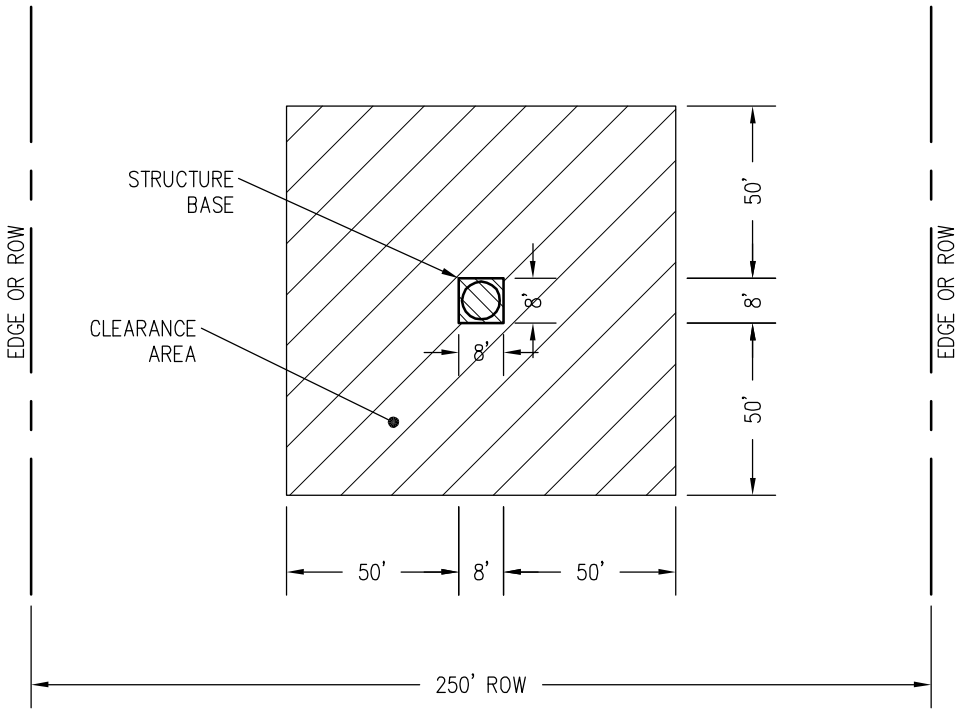

CLEARANCE ZONE FOR TUBULAR STEEL POLE
(TYPICAL)

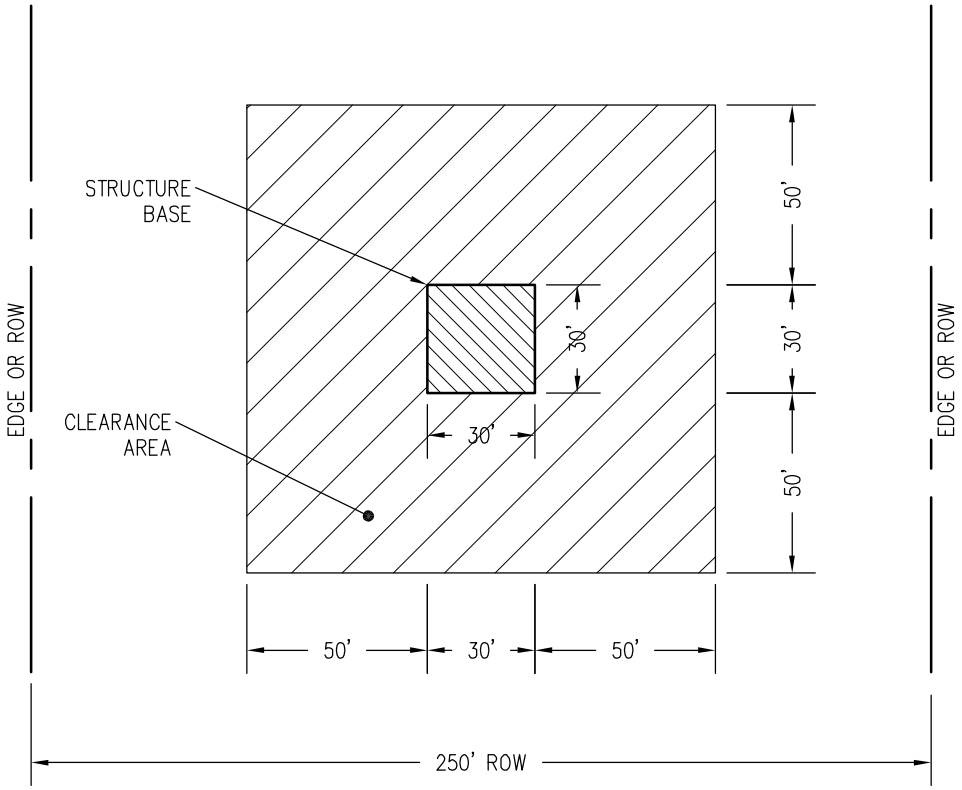

CLEARANCE ZONE FOR SELF-SUPPORTING LATTICE TOWER
(TYPICAL)

POWER ENGINEERS
www.powereng.com

TRANSWEST EXPRESS TRANSMISSION PROJECT
FIGURE R4

LEVELS 1, 2, & 3 VEGETATION CLEARANCE ZONE FOR TUBULAR STEEL POLE & SELF SUPPORTING STEEL LATTICE TOWER

R3.3.2 Level 2 – Selective ROW Wire-Border Zone Vegetation Management

Definition

The wire–border zone approach to vegetation management (Level 2) divides the ROW width into three distinct management zones from edge to edge: the border zone, the wire zone, and another border zone. The ROW vegetation is managed differently in the these zones to optimize the safe and reliable transmission of electricity while minimizing vegetation clearing in the border zone to balance for other values such as wildlife habitat and visual aesthetics. Herb–grass–forb cover types (low-growing vegetation), which may include short woody shrubs, are promoted in the wire zone, and shrub–short tree cover types (taller woody vegetation) are allowed to grow in the border zones (Ballard et al. 2007). The wire–border zone approach is supported by over 50 years of research to manage vegetation on transmission ROWs and is an industry accepted best practice to help ensure electric system reliability (NERC 2011). The wire–border zone approach is consistent with the NERC FAC-003-2 regulatory requirements to maintain the required Minimum Vegetation Clearance Distance (MVCD). MVCD is the calculated minimum distance (feet) to prevent flash-over between conductors and vegetation, for various altitudes and operating voltages (NERC 2011).

Application and Desired Condition

Level 2 is the desired condition for portions of the ROW where highly sensitive or constrained resource or agency management issues have been identified through the National Environmental Policy Act (NEPA) process and that can be effectively mitigated with Level 2 vegetation treatment. Level 2 vegetation management would meet the NERC standards, but would be more costly in terms of ongoing maintenance. Consequently, Level 2 would be applied selectively to only those portions of the ROW where the implementation of Level 2 would effectively mitigate potential impacts to highly sensitive resources. Examples of areas where Level 2 vegetation management may be appropriate are Visual Resource Management (VRM) Class III landscapes, or sensitive wildlife habitats susceptible to forest fragmentation impacts, where potential impacts can be effectively mitigated with this vegetation measure. Figure R5 shows a typical ROW cross-section for the TWE Project ±600 kilovolt (kV) direct current (DC) transmission line, and wire zone and border zone areas. A detailed definition of each zone and desired conditions are as follows:

Wire Zone

The Wire Zone is defined as the section of the utility ROW that is directly under the wires and extending outward a distance sufficient to accommodate anticipated wire movement. The Wire Zone for this Project is 90 feet in width centered on the transmission centerline. The maximum vegetation height for the desired conditions for Level 2 within the Wire Zone is six feet. The desired condition for the Wire Zone would be the same as Level 1 and characterized by stable, low-growth plant communities, free of noxious or invasive weeds. These communities would typically be comprised of herbaceous plants and low-growing shrubs, ideally native to the local area. Vegetation heights would average three feet in height, and may range up to six feet. Refer to Level 1 for full definitions.

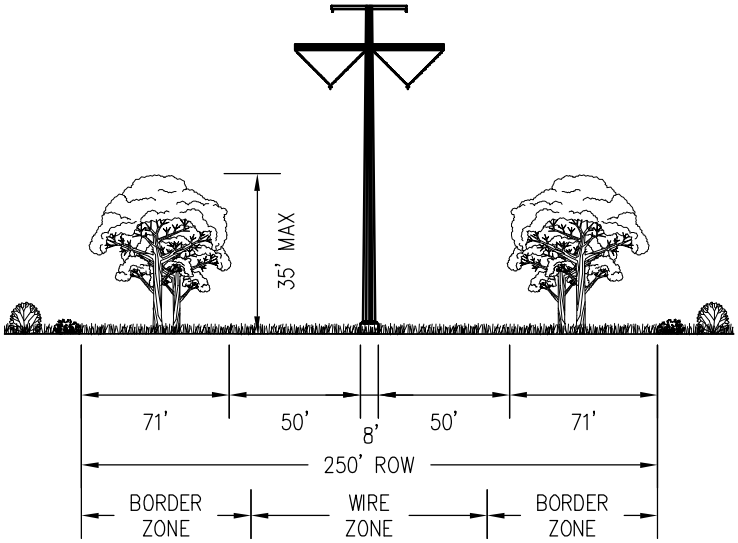

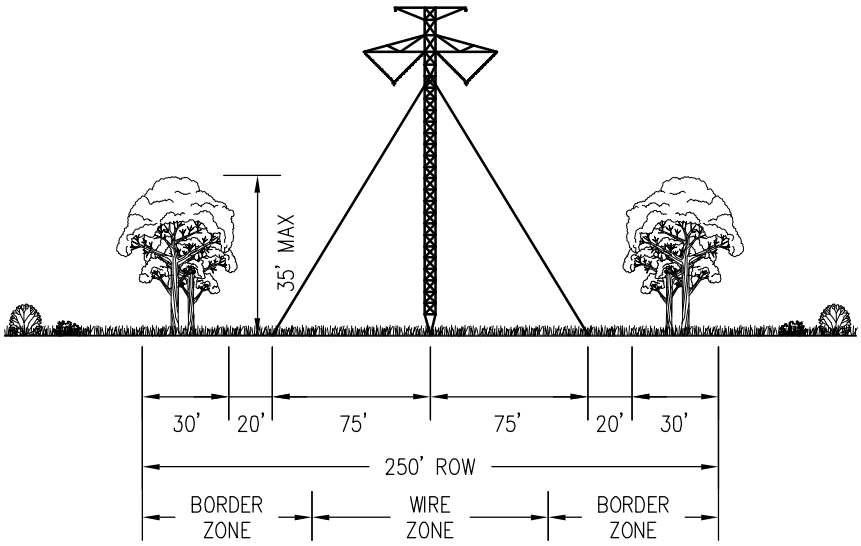

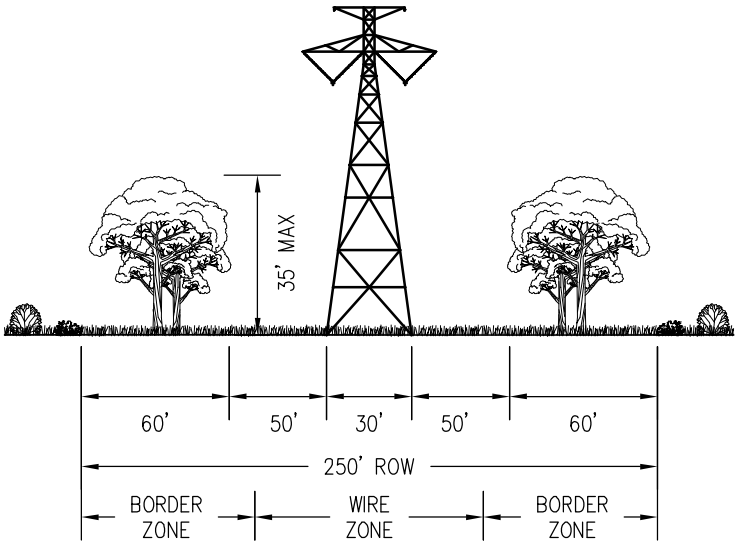

POWER ENGINEERS
www.powereng.com

TRANSWEST EXPRESS TRANSMISSION PROJECT

FIGURE R5

LEVELS 2 & 3 SELECTIVE ROW VEGETATION MANAGEMENT – CROSS SECTION VIEW

Border Zone

The Border Zone is defined as the section of the utility ROW that extends outward from Wire Zone boundary to the ROW boundary. For the TWE Project, the Border Zone would extend 80 feet on either side of the Wire Zone to the ROW boundary, depending on slope and other topographic conditions. For Level 2, the desired condition within the Border Zone is to manage this section of the ROW for stable low-growth vegetation consisting of small trees and large shrubs, as well as lower growing grasses and herbs. The maximum vegetation height within the Border Zone, within the center half of the span is 25 feet. The maximum vegetation height within the Border Zone, within the quarter spans nearest the structures is 35 feet. Taller vegetation may also be suitable, depending on the growth and density characteristics of specific tree varieties, as well as increased height of the conductors across canyons or low-lying valleys. Figure R5 conceptually illustrates the differences in vegetation height that the Wire-Border Zone management technique would allow for each of the three structure types. Figures R6 and R7 illustrate a typical profile view of Level 2 vegetation heights.

Implementation

As part of construction, implementation standards for the clearing of the ROW and access roads would be the same in the Level 2 Wire Zone as described previously (refer to Level 1 discussion). Level 1 construction standards would also be applied to the Level 2 Border Zone in instances where undesirable vegetation needs to be removed and managed for the life of the Project (e.g., fast-growing or invasive species). Other techniques that may be used in the Level 2 Border Zone during construction are selective mechanical or manual tree removal, side pruning, and selective use of herbicides. During operation, Level 2 vegetation would be managed the same as Level 1 in the Wire Zone. The Applicant would be responsible for routine inspections of vegetation. Annual work plans for the inspection and treatment of vegetation would be implemented. The annual work plans would describe the methods used, such as manual clearing, mechanical clearing, herbicide treatment, or other actions.

In the Border Zone, long-term operational practices would include additional techniques such as selective mechanical tree removal, selective manual control measures (e.g., use of hand-carried tools), thinning or feathering edges, and side pruning. To the extent feasible, the Applicant would maintain adequate downed material and standing snags for wildlife habitat. Long-term operational management of ROW vegetation under Level 2 would be more costly and labor-intensive over time, to ensure taller trees in the Border Zone do not violate NERC reliability standards for MVCD.

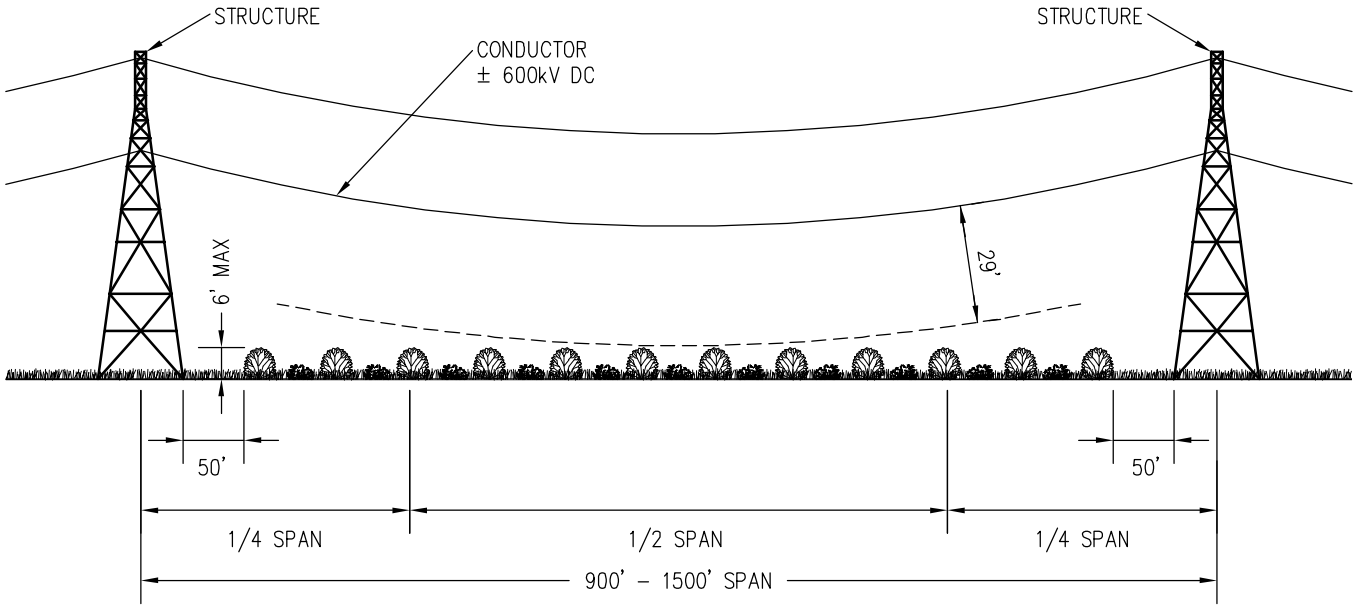

POWER ENGINEERS
www.powereng.com

TRANSWEST EXPRESS TRANSMISSION PROJECT
FIGURE R6

LEVEL 2 SELECTIVE ROW VEGETATION MANAGEMENT – WIRE ZONE PROFILE VIEW

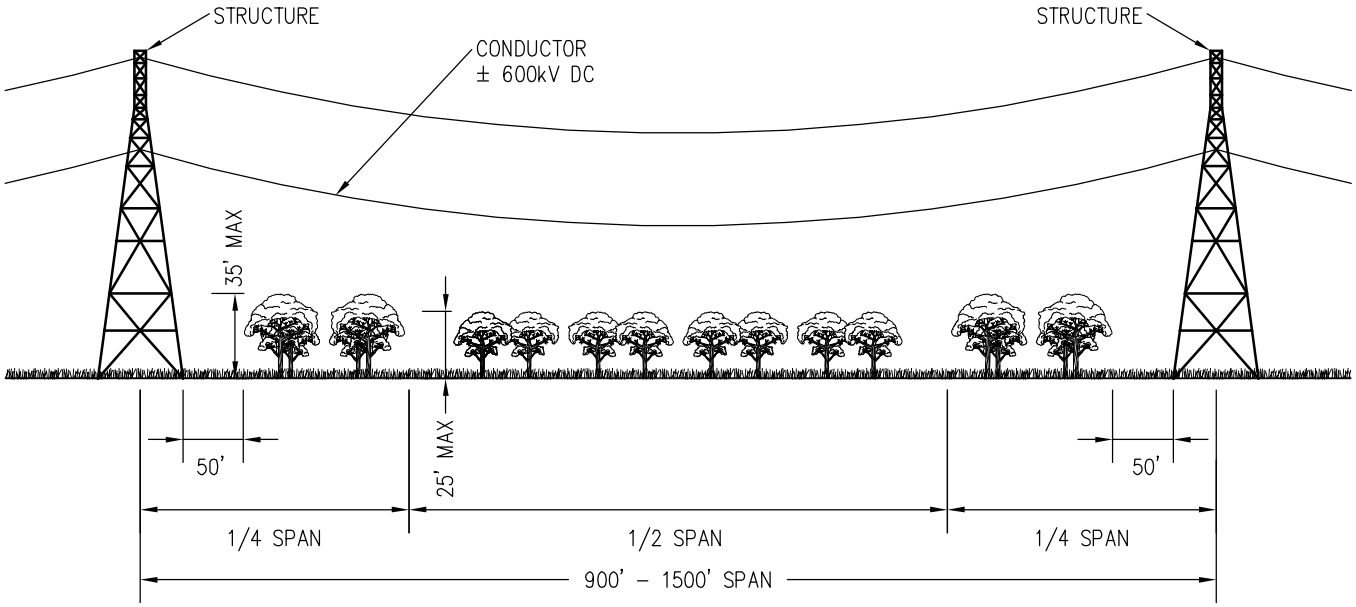

POWER ENGINEERS
www.powereng.com

TRANSWEST EXPRESS TRANSMISSION PROJECT
FIGURE R7

LEVELS 2 & 3 SELECTIVE ROW VEGETATION MANAGEMENT – BORDER ZONE PROFILE VIEW

R3.3.3 Level 3 – Selective ROW Clearance-Based Vegetation Management

Definition

Clearance based vegetation management (Level 3) builds on the wire-border zone approach described above. The desired condition is based on maintaining the Applicant-defined minimum clearance from energized conductors to any type of vegetation. Within the wire zone and border zone, the desired condition would allow for increased vegetation diversity and heights, where such vegetation would not pose potential conflicts with the Applicant-defined minimum clearances to vegetation. The Applicant-defined minimum clearances to vegetation have been established to incorporate NERC reliability standards, construction tolerances (variance in construction materials and workmanship skills), conductor and tree movement due to wind and/or ice loading, increased sag as a result of thermal loading, and allowances for rapid vegetation growth. For the TWE Project, the minimum clearances from an energized conductor to vegetation would be (NERC 2011):

- ±600 kV DC – 29 feet, which exceeds the MVCD of 13.24 feet (at maximum elevation of 10,000 feet)
- 500 kV alternating current (AC) – 23 feet, which exceeds the MVCD of 7.13 feet (at maximum elevation of 10,000 feet)

Increased vegetation heights within the ROW would be suitable where the vegetation does not encroach on the minimum clearance to vegetation established by the Applicant. Level 3 is also expected to be feasible at most ROW crossings of riparian vegetation due to increased structure heights at canyon crossings or low valley crossings. Level 3 may also be achieved in some locations by increasing the height of structures at riparian crossings to allow a greater diversity and height of vegetation to remain.

Application and Desired Condition

Level 3 is the Applicant's desired condition for limited and selective portions of the ROW that have been determined to have critical resource or agency management issues associated with vegetation within the Wire Zone. Level 3 would meet the NERC standards, but would be significantly more costly in terms of ongoing maintenance of the ROW, would require more frequent access to the ROW, and more frequent vegetation treatments. Consequently, Level 3 is proposed by the Applicant only in limited and specific areas of the ROW where practices would effectively mitigate potential impacts to critical resources and related land management issues. Examples of critically sensitive areas where Level 3 may be appropriate are at ROW crossings of riparian vegetation or VRM Class II areas where potential impacts can be effectively mitigated with this vegetation management practice. Figures R7 and R8 provide profiles for both the Wire and Border Zones for Level 3.

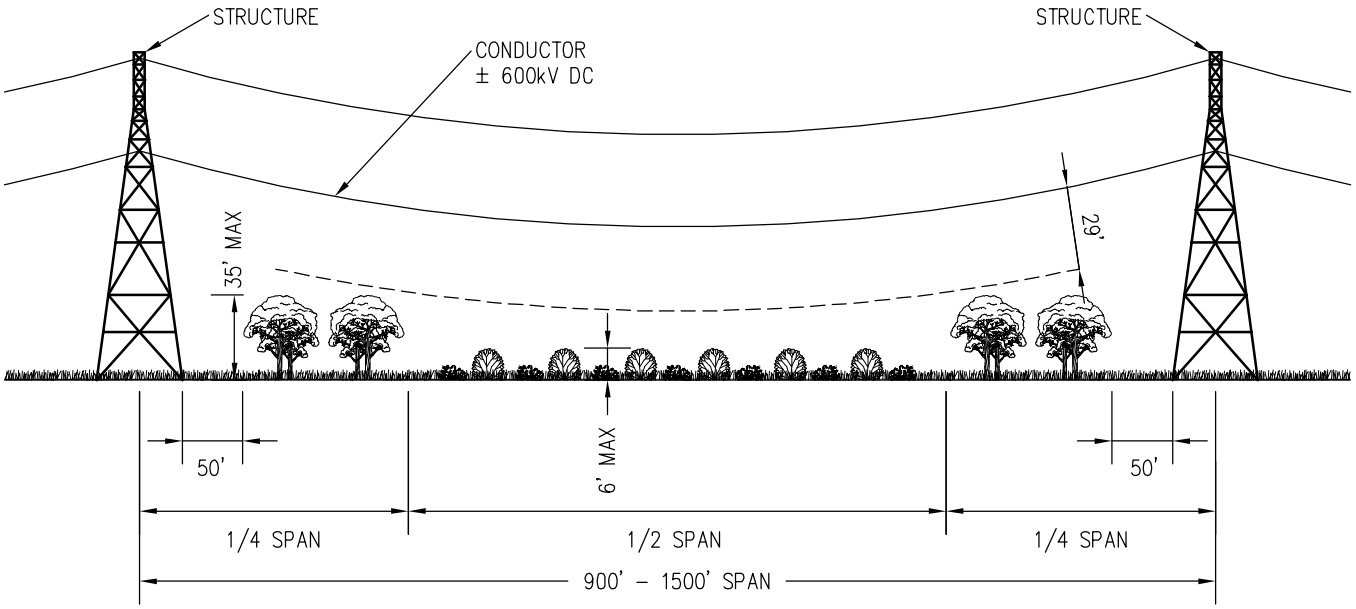

POWER ENGINEERS
www.powereng.com

TRANSWEST EXPRESS TRANSMISSION PROJECT
FIGURE R8

LEVEL 3 SELECTIVE ROW VEGETATION MANAGEMENT – WIRE ZONE PROFILE VIEW

Implementation

As part of construction, implementation standards for the clearing of the transmission structure sites and access roads within the ROW would be the same under Level 3 as previously described for Level 1 (refer to Level 1 discussion). In practice, Level 3 selective clearing of the entire ROW would be defined on a span-by-span basis such that any vegetation that does not meet the minimum clearance to vegetation established by the Applicant would be cleared. Level 3 construction standards would be applied in instances where undesirable vegetation needs to be removed from the ROW and managed for the life of the Project (e.g., fast-growing or invasive species). Selective clearing techniques that may be used for Level 3 clearance criteria during construction are selective mechanical tree removal, directional felling, cable yarding, side pruning, selective use of herbicides to control noxious weeds, and thinning or feathering edges. In general, trees and larger shrubs would be retained through selective clearing. To the extent feasible, the Applicant would maintain adequate downed material and standing snags for wildlife habitat.

During operation, Level 3 vegetation would be managed within the ROW to maintain the desired conditions. Long-term operational practices for Level 3 ROW areas would be more labor-intensive and expensive than Level 1 or 2, to ensure that, over time, taller trees and shrubs do not violate the Applicant-defined minimum clearances to vegetation. Level 3 also requires more frequent visitation and access to the ROW for inspections and vegetation treatments. During operation, the Applicant would be responsible for routine inspections of vegetation. Annual plans for the inspection and treatment of vegetation would be implemented. The annual plan would describe the methods to be used in Level 3 areas, as well as techniques applicable to the Level 1 and 2 portions of the ROW.

R3.3.4 Project-Specific Measures Applicable to All Levels

For all levels of ROW clearing, TransWest must meet the NERC requirements. Irrespective of the level of vegetation management applied, site-specific conditions may require a more conservative vegetation management approach such that the Applicant-defined minimum clearance to vegetation criteria, which complies with NERC, is met. Table R2 summarizes how these three levels would apply to each of the vegetation communities.

Clearing of mature vegetation (trees and tall shrubs), under or near the conductors, would be required to provide adequate electrical clearance and to maintain reliability. TransWest would coordinate timing and methods of tree clearing and removal with the appropriate land management agency, which would also approve the ROW boundary for tree removal. Restrictions that would apply to vegetation clearing throughout the TWE Project as required by land ownership are listed below:

- Clearing would be performed so as to minimize marring and scarring the countryside and preserve the natural beauty to the extent feasible.
- Vegetation clearing in the ROW would be minimized in deep valleys with high line clearance.
- Except for “danger trees,” no clearing would be performed outside the limits of the ROW or other predetermined construction areas. “Danger trees” are trees or tree limbs (located off of the transmission line ROW, and thus outside of normal clearing limits), which are of such height; condition (e.g., leaning, rotted); location (e.g., side hill, proximity to transmission lines, soil characteristics); and/or species type that they represent a threat to the integrity of the transmission line conductors, pole structures, or other facilities.

- If any salt cedar (*Tamarix* spp.) stands are felled, the cut stumps would be immediately treated with herbicides, as described in Appendix N – Noxious Weed Management Plan.

- Woody areas such as pinyon-juniper, which are on average taller than the six foot minimum clearance, but with wide spacing between trees allowing vehicle and equipment access to the ROW, would not be cleared during construction activities, as long as conductor clearance requirements and compliance with NERC is maintained (typically following standards described in Levels 2 and 3 below). Where clearing of pinyon-juniper is required, edges of clearing would be feathered. Where feasible, trees would be topped rather than removed if they exceed the allowable height unless otherwise directed by the land management agency or landowner.

- Within Inventories Roadless Areas (IRAs) and Special Designated Areas (SDAs) of high scenic quality, Level 2 or Level 3 management methods would be utilized as needed to reduce impact to wildlife habitat and reduce the level of habitat fragmentation during operations.

TABLE R2 TWE PROJECT DEIS VEGETATION MANAGEMENT GUIDELINES BY VEGETATION LAND COVER TYPE

VEGETATION LAND COVER TYPE/ AND DOMINANT SPECIES*	HEIGHT RANGE	REGENERATION TIME TO FORMER HEIGHT (YEARS)	LEVEL 1 – STANDARD ROW VEGETATION MANAGEMENT	LEVEL 2 – SELECTIVE ROW VEGETATION MANAGEMENT – WIRE-BORDER ZONE	LEVEL 3 – SELECTIVE ROW – CLEARANCE BASED VEGETATION MANAGEMENT
Montane Forest SO28, SO32 - Douglas fir - Subalpine fir - Engelmann spruce - Aspen	60 to 80 feet	50 to 150 years	Construction Phase: Cleared from ROW. Operation Phase: ROW managed for low growing shrubs and herbs.	Construction Phase: *ROW Wire Zone* – Same as Level 1. Cleared from ROW *ROW Border Zone* - Selectively cleared based on allowed vegetation types, heights and densities. Operation Phase: *ROW Wire Zone* - Same as Level 1. Managed for low growing shrubs and herbs. *ROW Border Zone* – Managed for compatible vegetation types, heights and densities, including trees, shrubs and herbs, based on allowed types, heights and densities.	Construction Phase: *ROW Wire Zone* - Selectively cleared based on allowed vegetation types, heights and densities. *ROW Border Zone* - Selectively cleared based on allowed vegetation types, heights and densities. Operation Phase: *ROW Wire Zone* – Managed for compatible vegetation, including trees, shrubs and herbs, based on allowed types, heights and densities. *ROW Border Zone* – Managed for compatible vegetation, including trees, shrubs and herbs, based on allowed types, heights and densities.
Aspen SO 23	30 to 70 feet	30 to 60 years	Construction Phase: Cleared from ROW. Operation Phase: ROW managed for low growing shrubs and herbs.	Construction Phase: *ROW Wire Zone* – Same as Level 1. Cleared from ROW *ROW Border Zone* – Same as Level 1. Cleared from ROW. Operation Phase: *ROW Wire Zone* - Same as Level 1. Managed for low growing shrubs and herbs. *ROW Border Zone* – Managed for allowed tree heights and densities.	Construction Phase: *ROW Wire Zone* - Selectively cleared based on allowed heights and densities. *ROW Border Zone* - Selectively cleared based on allowed heights and densities. Operation Phase: *ROW Wire Zone* – Managed for allowed vegetation, including shrub and types, heights and densities. *ROW Border Zone* – Managed for allowed vegetation, including shrub and tree types, heights and densities.
Ponderosa Pine SO36	40 to 90 feet	30 to 100 years	Construction Phase: Cleared from ROW.	Construction Phase: *ROW Wire Zone* – Same as	Construction Phase: *ROW Wire Zone* -

VEGETATION LAND COVER TYPE/ AND DOMINANT SPECIES*	HEIGHT RANGE	REGENERATION TIME TO FORMER HEIGHT (YEARS)	LEVEL 1 – STANDARD ROW VEGETATION MANAGEMENT	LEVEL 2 – SELECTIVE ROW VEGETATION MANAGEMENT – WIRE-BORDER ZONE	LEVEL 3 – SELECTIVE ROW – CLEARANCE BASED VEGETATION MANAGEMENT
			Operation Phase: ROW managed for low growing shrubs and herbs.	Level 1. Cleared from ROW *ROW Border Zone* - Selectively cleared based on allowed vegetation types, heights and densities. Operation Phase: *ROW Wire Zone* - Same as Level 1. Managed for low growing shrubs and herbs. *ROW Border Zone* – Managed for allowed tree heights and densities.	Selectively cleared based on allowed heights and densities. *ROW Border Zone* - Selectively cleared based on allowed heights and densities. Operation Phase: *ROW Wire Zone* – Managed for allowed vegetation, including shrub and types, heights and densities. *ROW Border Zone* – Managed for allowed vegetation, including shrub and tree types, heights and densities.
Pinyon Juniper SO39, SO40, SO52 - Pinyon pine Utah Juniper	15 to 40 feet	100 to 300 years	Construction Phase: Cleared from ROW. Operation Phase: ROW managed for low growing shrubs and herbs.	Construction Phase: *ROW Wire Zone* – Same as Level 1. Cleared from ROW *ROW Border Zone* - Selectively cleared based on allowed heights and densities. Most pinyon juniper would be allowed in the border zone. Operation Phase: *ROW Wire Zone* - Same as Level 1. Managed for low growing shrubs and herbs. *ROW Border Zone* – Managed for allowed tree heights and densities.	Construction Phase: *ROW Wire Zone* - Selectively cleared based on allowed heights and densities. Most pinyon juniper would be allowed in the wire zone. *ROW Border Zone* - Selectively cleared based on allowed heights and densities. Most pinyon juniper would be allowed in the border zone. Operation Phase: *ROW Wire Zone* – Managed for allowed vegetation, including shrub and tree types, heights and densities. *ROW Border Zone* – Managed for allowed vegetation, including shrub and tree types, heights and densities.
Mountain Shrubland SO46 - Gambel oak - Serviceberry - Mountain-mahogany - Chokecherry	8 to 15 feet	20 to 50 years	Construction Phase: Cleared from ROW. Operation Phase: ROW managed for low growing shrubs and herbs.	Construction Phase: *ROW Wire Zone* – Same as Level 1. Cleared from ROW *ROW Border Zone* - Selectively cleared based on allowed heights and densities. Most shrubs would be allowed in	Construction Phase: *ROW Wire Zone* - Selectively cleared based on allowed heights and densities. Most shrubs would be allowed in the wire zone, except along access roads and structure clearance sites.

VEGETATION LAND COVER TYPE/ AND DOMINANT SPECIES*	HEIGHT RANGE	REGENERATION TIME TO FORMER HEIGHT (YEARS)	LEVEL 1 – STANDARD ROW VEGETATION MANAGEMENT	LEVEL 2 – SELECTIVE ROW VEGETATION MANAGEMENT – WIRE-BORDER ZONE	LEVEL 3 – SELECTIVE ROW – CLEARANCE BASED VEGETATION MANAGEMENT
				the border zone. Operation Phase: *ROW Wire Zone* - Same as Level 1. Managed for low growing shrubs and herbs. *ROW Border Zone* – Managed for allowed shrub heights and densities.	*ROW Border Zone* - Selectively cleared based on allowed heights and densities. Most shrubs would be allowed in the border zone, except along access roads and structure clearance sites. Operation Phase: *ROW Wire Zone* – Managed for allowed vegetation, including shrub types, heights and densities. *ROW Border Zone* – Managed for allowed vegetation, including shrub types, heights and densities.
Sagebrush Shrubland SO54, SO55, SO56 - Big sagebrush - Silver sagebrush - Black sagebrush	2 to 6 feet tall	20 to 50 years	Construction Phase: Retained in ROW and along access roads and construction sites. Operation Phase: ROW managed for low growing shrubs and herbs.	NOT APPLICABLE	NOT APPLICABLE
Desert Shrubland SO45, SO60, SO65, SO69 Cold Desert: - Greasewood - Rabbitbrush - Saltbush species Warm Desert: - Creosote bush - Burro bush - Josha trees	1 to 6 feet tall Josha trees – 20 feet; Salt bush – less than 1 foot; Average – 3 feet	Cold desert: 30 to 50 years Warm desert: 50 to 200 years	Construction Phase: Retained in ROW except where fuel load is too great; and along access roads and construction sites. Joshua trees would be retained, except for center span of wire zone. Operation Phase: ROW managed for low growing shrubs and herbs. Joshua trees would be retained, except for center span of wire zone.	NOT APPLICABLE	NOT APPLICABLE
SO96, S118 - Cottonwoods - Wouldows	Trees – 30 to 60 feet (if	Trees – 50 to 80 years Shrubs – 5 to 20 years	NOT APPLICABLE	NOT APPLICABLE	Retained in ROW except where fuel load is too great; or where conductor clearances cannot be maintained.

VEGETATION LAND COVER TYPE/ AND DOMINANT SPECIES*	HEIGHT RANGE	REGENERATION TIME TO FORMER HEIGHT (YEARS)	LEVEL 1 – STANDARD ROW VEGETATION MANAGEMENT	LEVEL 2 – SELECTIVE ROW VEGETATION MANAGEMENT – WIRE-BORDER ZONE	LEVEL 3 – SELECTIVE ROW – CLEARANCE BASED VEGETATION MANAGEMENT
- River birch - Boxelder - Wouldow	present) Shrubs – 5 to 15 feet				Riparian areas would be avoided by access roads and construction sites to the extent feasible. Trees would be retained, except for center span of wire zone. *ROW Wire Zone and Border Zone* - Selectively cleared based on allowed vegetation types, heights and densities. Operation Phase: *ROW Wire Zone and Border Zone* - Managed for compatible vegetation, including trees, shrubs and herbs, based on allowed types, heights and densities.
Wetland SO96 - Greasewood - Saltbush - Inland salt grass - Alkali sacaton	2 to 5 feet	20 to 40 years	NOT APPLICABLE	NOT APPLICABLE	Construction Phase: Retained in ROW except where impacts are unavoidable (e.g., limited access roads). Operation Phase: Managed for retention of compatible vegetation.
Grassland/Steppe SO71, SO79, SO90 - Herbs and Shrubs	Herbs – 1 to 2 feet Shrubs – 1 to 5 feet	5 to 20 years	Construction Phase: Retained in ROW. Operation Phase: ROW managed for low growing shrubs and herbs.	NOT APPLICABLE	NOT APPLICABLE
Grassland – Invasive D08 - Cheatgrass - Red brome	Herbs – 1 to 2 feet	1 to 2 years	Construction Phase: Retained in ROW. Operation Phase: ROW managed for low growing shrubs and herbs if possible.	NOT APPLICABLE	NOT APPLICABLE
Riparian – Invasive D04 - Tamarisk	5 to 20 feet	5 to 20 years	Construction Phase: Cleared from ROW. Operation Phase:	NOT APPLICABLE	NOT APPLICABLE

VEGETATION LAND COVER TYPE/ AND DOMINANT SPECIES*	HEIGHT RANGE	REGENERATION TIME TO FORMER HEIGHT (YEARS)	LEVEL 1 – STANDARD ROW VEGETATION MANAGEMENT	LEVEL 2 – SELECTIVE ROW VEGETATION MANAGEMENT – WIRE-BORDER ZONE	LEVEL 3 – SELECTIVE ROW – CLEARANCE BASED VEGETATION MANAGEMENT
			ROW managed for noninvasive low growing shrub species.		

* Land cover types and dominant species listing is based on AECOM's Memorandum: Characteristics of Land Cover Crossed by TransWest Express Transmission Project Alternative Corridors, Draft, February 22, 2011.

R3.4 Slash and Mulch Management

Slash and mulch would be managed to reduce fire hazard, improve restoration effectiveness, reduce soil erosion, and improve aesthetic appeal. Cut trees would be whole tree yarded, decked, and removed or left on site as approved by the appropriate land management agency. Due to inaccessibility and safety concerns, it may not be possible to reach desired fuel levels on every piece of ground within the ROW, and trees may be left on site if they cannot be safely removed, as approved by the appropriate land management agency. Excessive pine needles left by tree clearing would be removed from the ROW and disposed of to prevent harm from grazing animals. All other slash and biodegradable debris would be left in place or disposed of in accordance with agency requirements. Depending on agency requirements, access, existing fuel loads, and fire safety, one or more of the slash disposal methods described below would be used to manage activity fuels.

R3.4.1 Lopping and Scattering

Vegetation may be lopped and scattered, but may not exceed a depth of 18 inches. Slash may not be left in streambeds, natural drainages, roadside ditches, or collection basins at the entrance of culverts. Slash may not be scattered so that concentrations lie around the base of any live trees. To the extent practicable, total residual debris (slash and natural debris) greater than three inches in diameter would not exceed 10 tons per acre, and total residual debris three inches or less in diameter would not exceed five tons per acre. This may require dispersing slash over a large area.

R3.4.2 Chipping

Foliage and limbs less than six inches in diameter may be chipped and spread on the ground within the ROW or removed from the ROW. If chipping and spreading woody material in the ROW, wood chips would not exceed three inches in depth and would be spread discontinuously so there is not a continuous chip mat (e.g., <40% of surface covered by three inches of chips). Chipping should be conducted in the fall to allow the chips to dry over the winter and before the spring bark beetle flight, as per the BLM Integrated Vegetation Management Handbook (BLM 2008).

R3.4.3 Windrow Vertical Mulch

Windrow vertical mulch is defined as materials including cut trees and shrubs, dead plants, cut plants and rocks that are temporarily set aside during ROW preparation so that they may be shredded or directly placed on the soil surface (post-construction) to increase fertility, provide microclimates for seed to germinate and stabilize soil. This would include any succulents that did not meet salvage requirements referred to in Section R3.2 Plant Salvage discussed further in Reclamation Plan (Appendix Q). To the extent feasible, windrow vertical mulch retained and/or replaced in the ROW would be spread discontinuously and not exceed 10 tons per acre of material over three inches in diameter and five tons per acre for material three inches or less in diameter. Windrow vertical mulch would not come entirely in contact with the soil surface, rather, parts of the mulch rise above the surface. Large rocks and boulders would be removed to the side. Rocks over six inches can be removed and stockpiled outside the disturbance areas (within the ROW), and used as needed for off-highway vehicle (OHV) deterrents. In some vegetation communities where mulch density would be very high, removal of excess mulch off site would be arranged after replacement quantities have been determined. Vertical mulch temporary storage areas would be located within the ROW.

R3.4.4 Decking

In areas that are accessible by existing roads or that allow for overland travel, cut trees may be whole tree yarded, skidded, and decked at designated decking yards or laydown areas for processing and loading onto trucks for transportation off site. During helicopter clearing, whole trees may be yarded

from the ROW to the decking yards or laydown areas where they would be limbed and processed. Commercial timber generated from the ROW clearing would be purchased from the appropriate land management agency or private landowner prior to ROW clearing and according to fair market value. Slash resulting from tree processing at decking areas may be chipped and removed as mutually agreed. All trees that may be safely removed from the ROW to a decking area shall be removed before April 1 of the following year. Trees would be whole-tree removed as much as possible (i.e., the removal of the entire tree, except for the branches that break-off during the cutting and removal operation). Logs or trees removed from the ROW would be transported to the decking areas by ground based equipment or helicopter. Updated versions of this Plan would identify staging areas and construction yards/decking areas.

R3.5 Reclamation

In areas disturbed during ROW clearing, surface preparation and reclamation activities would be implemented, as described in the Reclamation Plan (Appendix Q). Erosion and sediment control measures are specified in the Stormwater Pollution Prevention Plan (Appendix T).

R4.0 ANNUAL WORK PLANS

TransWest would complete 100% of its annual vegetation work plan for the transmission line to ensure no encroachments occur within the MVCD. Modifications to the work plan in response to changing conditions or to findings from vegetation inspections may be made (provided they do not allow encroachment of vegetation into the MVCD) and would be documented. For each annual work plan, TransWest would calculate the percent completed, which is based on the number of units actually completed, divided by the number of units in the final amended work plan (measured in units of choice - circuit, pole line, line miles or kilometers, etc.). Examples of reasons for modification to an annual plan may include:

- Change in expected growth rate/environmental factors
- Circumstances that are beyond the control of a Transmission Owner
- Rescheduling work between growing seasons
- Crew or contractor availability/Mutual assistance agreements
- Identified unanticipated high priority work
- Weather conditions/Accessibility
- Permitting delays
- Land ownership changes/Change in land use by the landowner
- Emerging technologies

R5.0 VEGETATION INSPECTIONS

NERC requires that inspections of vegetation clearance be conducted at least once per year at intervals no greater than 18 months, on 100% of applicable lines. It is not anticipated that more frequent vegetation inspections would be needed, because of the generally low rainfall amounts and

growth rates of local vegetation where the TWE Project is located (NERC 2011). However, more frequent visits may be required in forested areas where selective vegetation clearing measures would be implemented (Levels 2 and 3). Vegetation inspections require the systematic examination of the ROW to document those vegetation conditions under TransWest's control that are likely to pose a hazard to the line, and may be combined with a general line inspection. The inspection includes the identification of any vegetation that may pose a threat to reliability prior to the next planned maintenance or inspection work, considering the current location of the conductor and other possible locations of the conductor due to sag and sway for rated conditions. The information from the vegetation inspections would be used to determine risk, determine future work, and evaluate recently complete work.

TransWest would maintain records to demonstrate vegetation is being managed to prevent encroachment into the MVCD and that vegetation inspections are annually implemented following the annual work plan (NERC 2011). These records would include a copy of the completed annual work plan (including modifications if any), completed and dated work orders, dated invoices, dated inspection records, dated attestations, confirmation of no real-time observations of any MVCD encroachments, and/or dated reports containing no vegetation-related Sustained Outages associated with any of the following encroachment types:

- An encroachment due to a fall-in from inside the ROW;
- An encroachment due to blowing together of applicable lines and vegetation located inside the ROW; or
- An encroachment due to vegetation growth into the MVCD.

If TransWest is constrained from performing vegetation work (e.g., by land owners or land management agencies), which may lead to a vegetation encroachment into the MVCD prior to the implementation of the next annual vegetation inspection, then TransWest would take corrective action to ensure continued vegetation management to prevent encroachments. TransWest would maintain records of the corrective action taken for each constraint where the transmission line was put at potential risk. Examples of acceptable forms of evidence may include initially-planned work orders, documentation of constraints from landowners, court orders, inspection records of increased monitoring, documentation of the de-rating of lines, revised work orders, invoices, or evidence that a line was de-energized (NERC 2011).

If there are vegetation conditions that could cause a fault at any moment, TransWest would immediately notify the appropriate control center holding switching authority for the transmission line. In this scenario, TransWest would maintain records that it notified the control center holding switching authority without any intentional time delay. Examples of evidence may include control center logs, voice recordings, switching orders, clearance orders and subsequent work orders. All potential grow-in or fall-in vegetation-related conditions would not necessarily cause a fault at any moment. For example, danger trees would not require notification to the control center unless they pose an immediate fall-in threat (NERC 2011).

R6.0 REPORTING

TransWest would document annual inspections and vegetation management activities in compliance with NERC requirements. Additional documentation regarding the preservation of existing vegetation if feasible, salvaging live plants, and salvaging dead or cut plants for mulching would be included as part of restoration monitoring for implementation of the Reclamation Plan (Appendix Q).

R7.0 REFERENCES

AECOM. 2010. Memorandum: TransWest Express Project Review of Applicant-Supplied Project Description Information and Draft Project Description Data Request. December 2010.

American National Standards Institute, Inc. (ANSI). 2006. ANSI, A300 (Part 7) - 2006. Tree, Shrub, and Other Woody Plant Maintenance – Standard Practices (Integrated Vegetation Management a. Electric Utility Rights-of-way). Washington, D.C. February 2006.

Ballard, B.D., K.T. McLoughlin, and C.A. Nowak. 2007. *Research Note:* New Diagrams and Applications for the Wire Zone–Border Zone Approach to Vegetation Management on Electric Transmission Line Rights-of-Way. Arboriculture & Urban Forestry 2007. 33(6):435–439.

Bureau of Land Management (BLM). 2008. Integrated Vegetation Management Handbook H1740-2. Release 1-1714. 103 pp. plus appendices.

National Park Service (NPS). 2003. Damage Assessment and Restoration Handbook: Guidance for Damage Assessment and Restoration Activities in the National Park Service. Environmental Quality Division, Environmental Response, Damage Assessment, and Restoration Branch, Washington, D.C.

North American Electric Reliability Corporation (NERC). 2011. Transmission Vegetation Management Standard FAC-003-2 Technical Reference. Princeton, New Jersey. September 2011.

_____. 2013. Docket No. RM12-4-000; Order No. 777. Revisions to Reliability Standard for Transmission Vegetation Management, 18 CFR Part 40. March 21, 2013.

U.S. Forest Service (USFS). 2008. Forest Service Manual 2000 – National Forest Resource Management, Chapter 2070 – Vegetation Ecology, Washington Office (WO) Amendment No. 2000-2008-1. Washington, D.C.

APPENDIX S
FRAMEWORK SPILL PREVENTION AND RESPONSE PLAN

TABLE OF CONTENTS

S1.0 INTRODUCTION 1

S2.0 PLAN PURPOSE 1

S3.0 PLAN UPDATES 1

S4.0 RESPONSIBILITY OF PLAN IMPLEMENTATION 1

S5.0 GENERAL PETROLEUM PRODUCTS, QUANTITIES, AND STORAGE 1

S6.0 SPILL PREVENTION MEASURES 2

S6.1 OIL TRANSFER OPERATIONS 2
S6.1.1 Hydraulic and Lubricating Oils 2
S6.1.2 Diesel Fuel and Gasoline 2
S6.2 SECONDARY CONTAINMENT AND/OR DIVERSIONARY STRUCTURES 3
S6.3 INSPECTIONS AND PERSONNEL TRAINING 3
S6.3.1 Inspections 3
S6.3.2 Personnel Training 4

S7.0 SPILL CONTROL AND COUNTERMEASURES 4

S8.0 AGENCY NOTIFICATION 5

S8.1 EMERGENCY CONTACTS 5

S9.0 ENVIRONMENTAL PROTECTION 6

TABLES:

TABLE S1 FEDERAL AND STATE EMERGENCY CONTACTS 5

APPENDICES:

ATTACHMENT A TYPICAL SPILL CONTAINMENT MEASURES 7

ACRONYMS

Applicant	TransWest Express LLC, also TransWest
BLM	Bureau of Land Management
BMP	Best Management Practice
CFR	Code of Federal Regulations
CSU	Controlled Surface Use
DEIS	Draft Environmental Impact Statement
EMM	Environmental Mitigation Measure
EPA	United States Environmental Protection Agency
FEIS	Final Environmental Impact Statement
NSU	No Surface Use
NTP	Notice to Proceed
Plan	Spill Prevention and Response Plan
POD	Plan of Development
Project	TransWest Express Transmission Project, also TWE Project
ROD	Record of Decision
ROW	right-of-way
SPCC Plan	Spill Prevention, Control, and Countermeasure Plan
TransWest	TransWest Express LLC, also Applicant
TWE Project	TransWest Express Transmission Project, also Project
USDOT	United States Department of Transportation
USFS	United States Forest Service
WWEC	West-wide Energy Corridor

S1.0 INTRODUCTION

This framework Spill Prevention and Response Plan (Plan) identifies the specific stipulations and methods that TransWest Express LLC (TransWest or Applicant) and its Construction Contractor(s) will follow to address spill prevention, response, and cleanup for the TransWest Express Transmission Project (TWE Project or Project). In conjunction with this framework Plan, TransWest developed a framework Hazardous Materials Management Plan (Appendix L), which identifies specific measures that TransWest and its Construction Contractor(s) will take to reduce the risks associated with the use, storage, transportation, and disposal of hazardous materials.

S2.0 PLAN PURPOSE

The purpose of this Plan is to prevent hazardous material spills from Project facilities entering into water bodies. The Construction Contractor(s) shall use the following framework to develop the Spill Prevention and Response Plan, which differs from a Spill Prevention, Control, and Countermeasure (SPCC) Plan which is required for facilities that store more than 1,320 gallons of oil. For Project facilities that store more than 1,320 gallons of oil in containers with shell capacities of 55 gallons or greater, a SPCC Plan will be developed in accordance with Title 40 Code of Federal Regulations (CFR) Part 112.

The following framework describes measures that the Construction Contractor(s) shall use to prevent, respond to, and control spills of hazardous materials, as well as measures to minimize a spill's effect on the environment.

S3.0 PLAN UPDATES

This Plan will be updated for the Record of Decision (ROD) Plan of Development (POD) and will include relevant mitigation measures to ensure regulation compliance and safety. The Plan for the Notice to Proceed (NTP) POD will include updates as needed based on the final design and engineering and a complete and up-to-date emergency contact list. The Construction Contractor(s) will be responsible for preparing and implementing the final Plan in compliance with local, state, and federal regulations pertaining to spill prevention and response.

S4.0 RESPONSIBILITY OF PLAN IMPLEMENTATION

TransWest, through its Construction Contractor(s) and inspectors, shall be responsible for implementing the Plan. The Construction Contractor(s) shall comply with applicable federal, state, and local regulations for using, storing, and disposing of hazardous materials, as well as for oil transfer operations.

S5.0 GENERAL PETROLEUM PRODUCTS, QUANTITIES, AND STORAGE

During construction activities, the Construction Contractor(s) would use various petroleum products. Typical fuels used for the Project include diesel fuel and gasoline. Typical lubricants for the Project include engine oil, transmission/drive train oil, hydraulic oil, gear oil, and general lubricating grease. Typical coolants include glycols such as anti-freeze.

The quantity of fuel storage will vary generally from 500 to 1,000 gallons in aboveground storage tanks at designated construction yards. The aboveground storage tanks will be equipped with secondary containment sized to contain the largest volume of fuel and provide sufficient freeboard. Fuel trucks will be used to transport large quantities of fuel. Smaller quantities of fuel, five to 100

gallons, may sometimes be stored temporarily in the construction area along the right-of-way (ROW). Pickup trucks will be used to transport these smaller quantities of fuel.

Lubricants and coolants will be stored in bulk or retail packaging at contractor yards in quantities typically less than 500 gallons and transported in trucks to the construction area as needed.

S6.0 SPILL PREVENTION MEASURES

The following describes various spill prevention measures that the Construction Contractor(s) shall implement to reduce the potential for a spill to occur in accordance with Applicant Committed Environmental Mitigation Measure (EMM) TWE-57. The measures include conducting oil transfer operations in accordance with applicable oil pollution prevention and safety requirements, and conducting periodic inspections and personnel training.

S6.1 Oil Transfer Operations

S6.1.1 Hydraulic and Lubricating Oils

The hydraulic and lubricating oils in construction vehicles are typically replenished or replaced on an infrequent basis. It is expected that the hydraulic and lubricating oils would be handled using containers, each of which would have a shell capacity of less than 55 gallons.

S6.1.2 Diesel Fuel and Gasoline

It is expected that vendors would use tank trucks to deliver diesel fuel and gasoline to aboveground storage tanks, where construction vehicles would refuel. When tank truck loading/unloading operations occur, Construction Contractor personnel shall ensure that procedures at the site meet the minimum requirements and regulations established by the U.S. Department of Transportation (USDOT). Fuel transfer operations shall occur through aboveground unloading hoses, which shall be supported and designed to minimize abrasion during transfer operations. To prevent vehicles from departing before disconnection of the transfer hose, spill prevention techniques provide for:

- The setting up of barriers or warning signs to prevent a truck from leaving before the completion of unloading.
- Placing wheel chocks on truck tires to prevent vehicle movement during unloading.
- Closely inspecting the lowermost drain and all outlets for discharges.
- Ensuring truck drains/outlets are tightened, adjusted, or replaced as needed.

The Construction Contractor(s) shall take the following measures to prevent spills prior to, during, and after unloading:

- **Prior to unloading:** Fuel levels shall be verified, connections rechecked, and hoses examined for integrity. Signs shall be posted warning all vehicular traffic operating in the transfer area to use caution.
- **During unloading:** Only trained personnel authorized to conduct the transfer shall be utilized. The transfer and pumping system shall be continually monitored for leaks and the fuel level in the receiving container shall be frequently monitored to prevent overfilling.

- **After unloading:** The transfer hose shall be properly drained and disconnected, and all tank truck drains and connections shall be checked for proper closure prior to departure.

Vehicle refueling and servicing activities will be performed in designated construction zones located more than 100 feet from wetlands and intermittent streams and more than 500 feet from perennial steams in accordance with Applicant Committed EMM TWE-24. If unique conditions require refueling within 100 feet of a water body, wetland, or within designated municipal watersheds, a determination of necessary emergency response actions shall be conducted prior to refueling activities. Additionally, absorbent materials or other spill containment materials shall be available for immediate application prior to commencing refueling activities. Fuel trucks transporting fuel to on-site equipment shall travel only on approved access roads.

Each construction crew shall have readily available and sufficient supplies of absorbent, barrier materials and USDOT-approved containers to allow for rapid containment and recovery of any spill of hazardous material.

S6.2 Secondary Containment and/or Diversionary Structures

All hazardous materials containing equipment that has the potential to discharge to water bodies shall be equipped with secondary containment or other appropriate prevention measures. The Construction Contractor(s) shall develop oil transfer/unloading procedures (section S6.1) and have spill response materials available that can be used to immediately respond to a discharge, should an incident occur..

S6.3 Inspections and Personnel Training

S6.3.1 Inspections

The Construction Contractor(s) shall conduct weekly inspections of oil-containing equipment and facilities. These inspections shall include the items below, as applicable, and be recorded either with paper inspection forms or electronically:

- Container foundation
- Container shell condition
- Tank level control
- Piping condition
- Piping supports
- Piping flange or expansion joints
- Piping valve glands and bodies
- Locking of valves
- Oil levels
- Oil gauges
- Oil leaks of any type
- Stains and accumulated free product on the ground

S6.3.2 Personnel Training

The Construction Contractor's personnel shall receive hazardous material awareness training in accordance with Applicant Committed EMM TWE-57. More specifically, prior to the start of construction activities, the Construction Contractor(s) shall train hazardous material-handling personnel on methods to prevent, control, and respond to a hazardous material spill. Newly hired personnel who work in facilities where hazardous materials are stored shall be informed of storage locations and the emergency plan procedure in the event of an accidental spill. New personnel who work with hazardous materials shall be trained in the proper management of those materials under normal operating circumstances and under emergency circumstances. Hazardous material-handling personnel shall be trained on the following topics:

- Operation and maintenance of equipment to prevent discharges
- Applicable state and federal laws, rules, and regulations
- Spill reporting procedures
- Spill containment and recovery procedures
- Storage of waste materials
- Safety and health considerations
- General facility operations
- Contents of the Spill Prevention and Response Plan

S7.0 SPILL CONTROL AND COUNTERMEASURES

Should a spill occur, the Applicant and its Construction Contractor(s) shall commit the manpower, equipment, and materials necessary to respond to and control a hazardous material spill in accordance with Applicant Committed EMM TWE-57. Prior to construction, the Construction Contractor(s) shall submit an emergency preparedness and response plan. The plan shall comply with all applicable federal, state, and local regulations. The plan shall describe emergency response operations, including but not limited to, spill control, cleanup, notification, characterization, and disposal procedures. All contractor supervisors and personnel handling hazardous substances shall be familiar with these procedures.

As part of the emergency preparedness and response plan, the Construction Contractor(s) shall establish procedures and individual responsibilities regarding spill discovery, response, clean-up, and disposal. Prior to beginning construction, the Construction Contractor(s) shall be required to submit a list of spill response contractors and commercial disposal facilities to TransWest for approval. Per West-wide Energy Corridor (WWEC) Best Management Practice (BMP) PHS-15 in the Draft Environmental Impact Statement (DEIS), hazardous material spills shall be removed and the affected area(s) cleaned to meet applicable standards. Per the Bureau of Land Management (BLM) Richfield Field Office's No Surface Use (NSU) and Controlled Surface Use (CSU) restrictions for the Utah prairie dog, inadvertent spills of petroleum-based or other toxic materials shall be removed and the affected area(s) cleaned immediately.

The emergency preparedness and response plan will describe measures to respond to and control hazardous material spills. Following a spill, all reasonable efforts shall be made to immediately control the source of the discharge and contain the spill. Absorbent materials shall be deployed with efforts directed to limiting the area of contamination. All reasonable efforts shall be made to prevent any spill from reaching wetlands or waterbodies. If a spill should reach surface waters, straw bales, booms, and absorbent materials shall be immediately deployed to contain and reduce downstream migration of the spilled material. Once a spill is contained, cleanup activities shall begin immediately. All spilled material, contaminated soil, and absorbent material shall be picked up and contained for disposal. In the event of a large spill or a spill that migrates into surface waters, the spill response contractors will be called to assist in cleanup efforts. Attachment A includes a list of typical spill containment measures

S8.0 AGENCY NOTIFICATION

S8.1 Emergency Contacts

Any spill of any material in such quantity as may, with reasonable probability, injure or be detrimental to human health, animal, plant life, property, or may unreasonably interfere with the public welfare or the use of property will be reported. This includes chemical, biohazardous, petroleum-product, and sewage spills and incidents. In addition to recent spills, the discovery of evidence of previous unauthorized discharges, such as contaminated soil or groundwater, also must be reported. As soon as possible after beginning spill control and cleanup activities, the Construction Contractor(s) shall notify TransWest, who will determine if the spill is reportable. TransWest will notify the appropriate authorities of any reportable spills.

In accordance with Applicant Committed EMM TWE-57, Table S1 lists the federal and state contacts that the Construction Contractor(s) shall notify in the event of a reportable hazardous material spill from a Project facility or construction site. The agencies listed are based on the jurisdictions crossed by the Agency Preferred and Applicant Proposed Alternatives in the Final Environmental Impact Statement (FEIS). In accordance with WWEC BMP PHS-13 in the DEIS, the Construction Contractor(s) shall document the spill and provide the documentation to the land management agency's authorized officer. The Construction Contractor(s) shall also note the cause of the spill and note corrective measures taken to prevent another spill from occurring.

TABLE S1 FEDERAL AND STATE EMERGENCY CONTACTS

AGENCY TO BE CONTACTED	CONTACT NAME	PHONE/ADDRESS
Federal		
EPA Region 8 Emergency Response Center	TBD	303.312.6312
EPA Region 9 Emergency Response Center	TBD	415.947.8000
BLM, Rawlins Field Office	TBD	307.328.4200
BLM, Little Snake Field Office	TBD	970.826.5000
BLM, White River Field Office	TBD	970.878.3800
BLM, Vernal Field Office	TBD	435.781.4400
BLM, Price Field Office	TBD	435.636.3600
BLM, Salt Lake Field Office	TBD	801.977.4300
BLM, Richfield Field Office	TBD	435.896.1500

AGENCY TO BE CONTACTED	CONTACT NAME	PHONE/ADDRESS
BLM, Fillmore Field Office	TBD	435.743.3100
BLM, Cedar City Field Office	TBD	435.865.3000
BLM, St. George Field Office	TBD	435.688.3200
BLM, Ely District Office	TBD	775.289.1800
BLM, Las Vegas Field Office	TBD	702.515.5000
USFS, Ashley National Forest	TBD	435.789.1181
USFS, Uinta National Forest	TBD	801.999.2103
USFS, Manti-La Sal National Forest	TBD	435.637.2817
USFS, Dixie National Forest	TBD	435.865.3700
State		
Wyoming Department of Environmental Quality	TBD	307.777.7781
Colorado Department of Public Health and Environment	TBD	877.518.5608
Utah Department of Environmental Quality	TBD	801.536.4123
Nevada Division of Environment al Protection	TBD	888.331.6337

EPA = United States Environmental Protection Agency; BLM = Bureau of Land Management; USFS = United States Forest Service

S9.0 ENVIRONMENTAL PROTECTION

EMMs shall be applied Project-wide and shall address the concerns associated with spills. These measures are subject to change and will be finalized after discussions with agencies and as the Project progresses.

ATTACHMENT A
TYPICAL SPILL CONTAINMENT MEASURES

Interceptor Trenching/French Drainage

Remove yard rock from the downslope side of the spill (Figure 14). Excavate an interceptor trench and line it with polyethylene. Use vacuum trucks to pump oil product from the collection depression, or portable skimmers in conjunction with storage containers (drums, dracons, tank trucks). Sorbent matting can be used if eduction and/or skimming equipment is operationally unavailable or oily product in the collection depression is minimal.

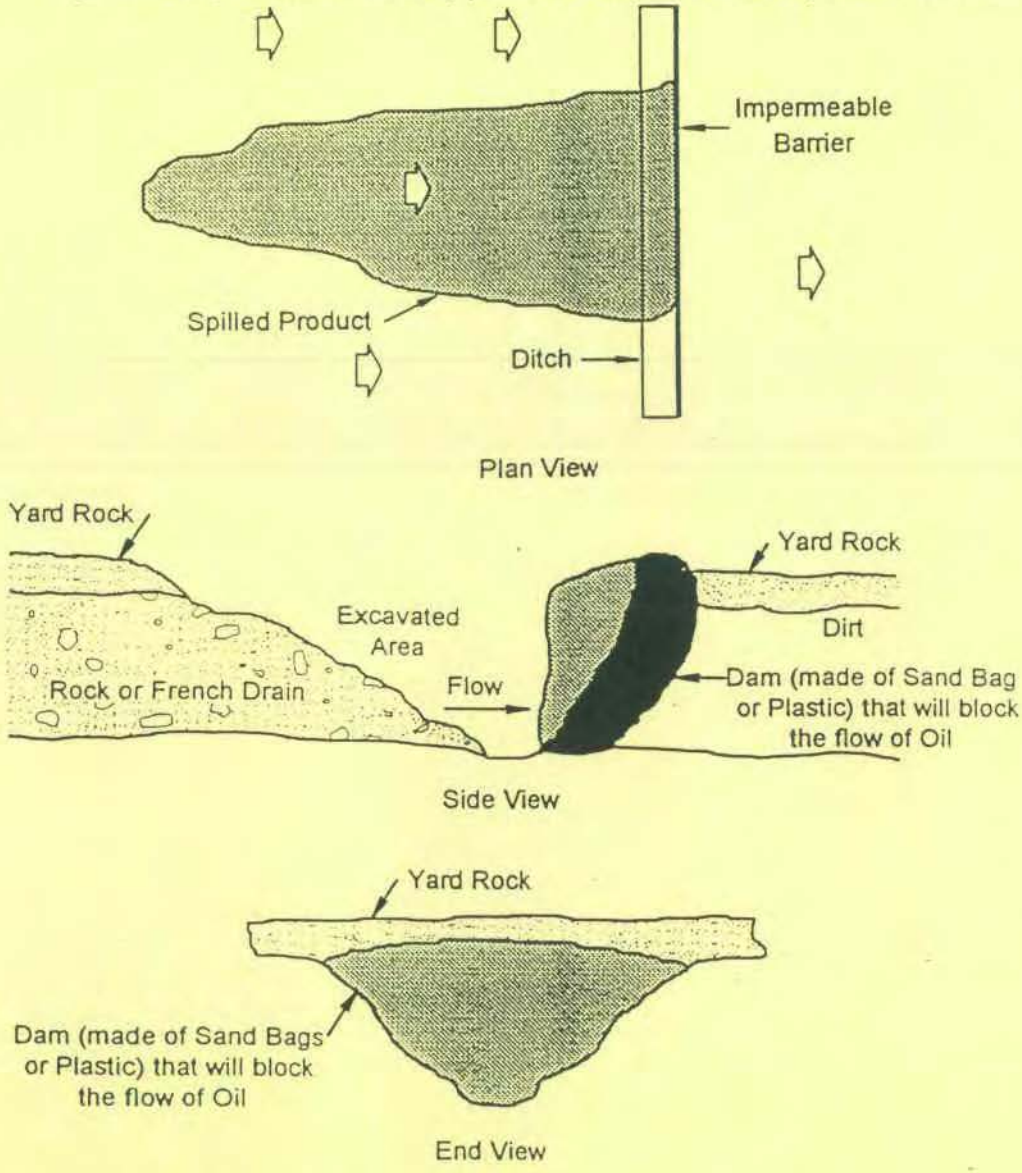

Figure 14. Interceptor Trenching/French Drainage

Follow these procedures for containing oils spills utilizing Interceptor trenching

- Remove yard rock from drain downslope from spill.
- Build earth or plastic sheeting dam on downslope side.
- Pump or skim oil from hole.

Solid Dams for Drainage Ditches, Canals, and Rivers (Less than I knot of current)

If water flow is non-existent in a drainage ditch, canal, or small river, and construction equipment is available, earthen dams can be constructed to abate oily product movement. Sandbags can be used to reinforce or build an earthen dam (Figure 15). Lining the earthen dam with polyethylene can improve the impermeability of the earthen dam. Sorbent matting or boom and portable skimmers can be used to remove the oily product from inside the dam.

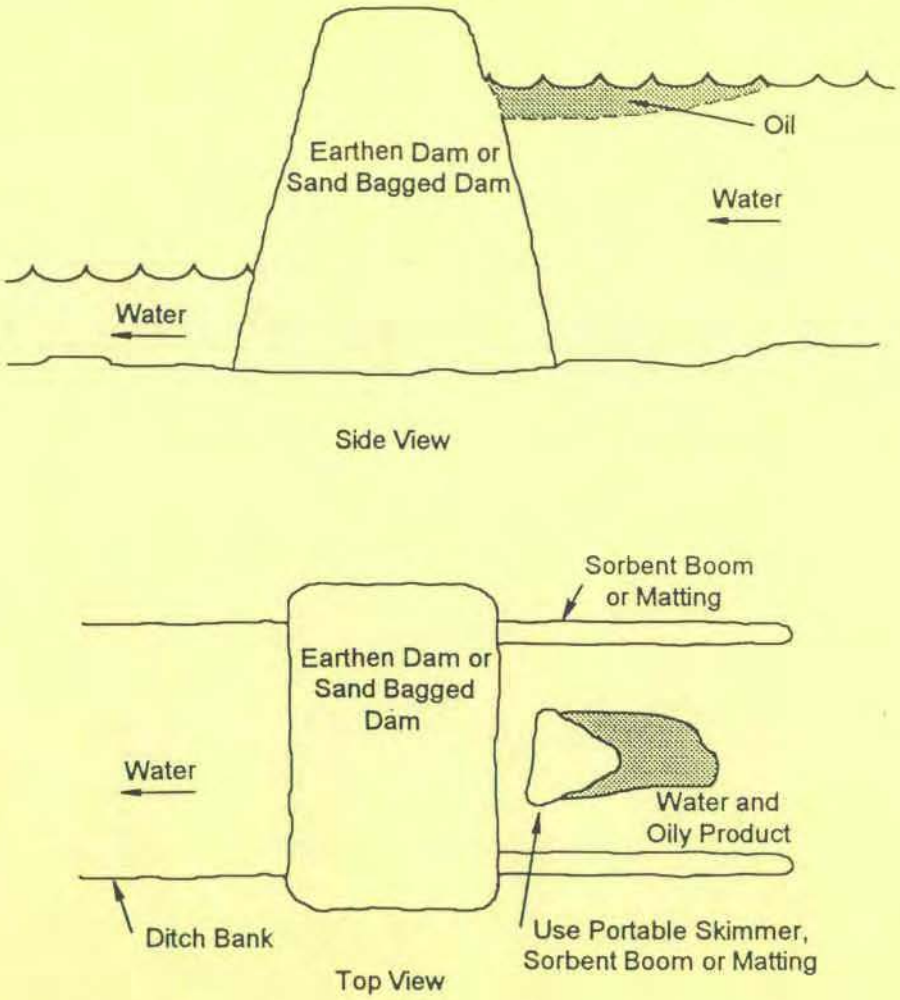

Figure 15. Sandbag and Earthen Dams

Sorbent Booms for Drainage Ditches, Canals, and Rivers (1-3 knots of current)

Sorbent boom was designed to provide very *limited containment or deflection capability*, while absorbing oily product (Figure 19a). Sorbent boom is an operational compromise between flat sorbent matting and standard skirted containment boom. Flat sorbents offer the most surface area for soaking up oil, but have no containment or deflection capabilities. Traditional skirted oil boom contains or deflects oily product, but absorbs nothing. A sorbent boom is most effective when used in conjunction with sorbent matting or pads, *but only in light currents.* Sorbent boom is available in 4, 8, 10, and 20 foot lengths and 4, 6, and 8 inch diameters.

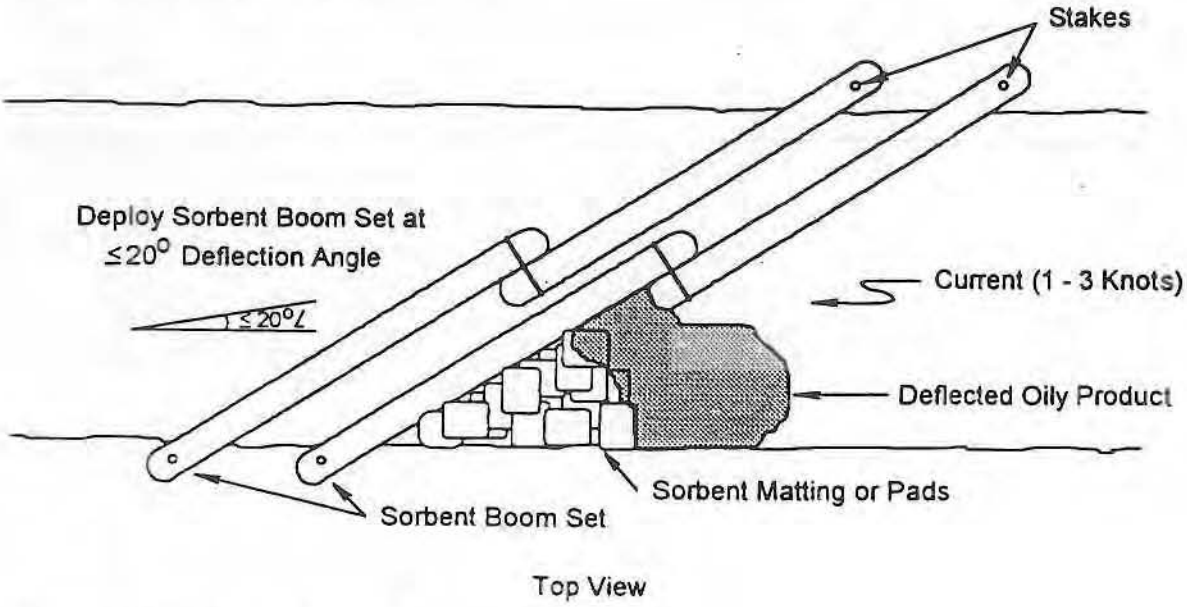

Figure 19a. Sorbent Boom 1

Follow these instructions for using Sorbent Boom 1:

- Use sorbent boom in paired lengths to assure minimal leakage.
- If current is evident, assure deflection angle is 20 degrees or less.
- Oily product will collect at apex of sorbent boom/shoreline angle. Use sorbent matting and pads, or portable skimmers to clean oily product.

Sorbent Booms for Drainage Ditches, Canals, and Rivers (1-3 knots of current)

Sorbent boom was designed to provide very *limited containment or deflection capability,* while absorbing oily product (Figures 19b). Sorbent boom is an operational compromise between flat sorbent matting and standard skirted containment boom. Flat sorbents offer the most surface area for soaking up oil, but have no containment or deflection capabilities. Traditional skirted oil boom contains or deflects oily product, but absorbs nothing. A sorbent boom is most effective when used in conjunction with sorbent matting or pads, *but only in light currents.* Sorbent boom is available in 4, 8, 10, and 20 foot lengths and 4, 6, and 8 inch diameters.

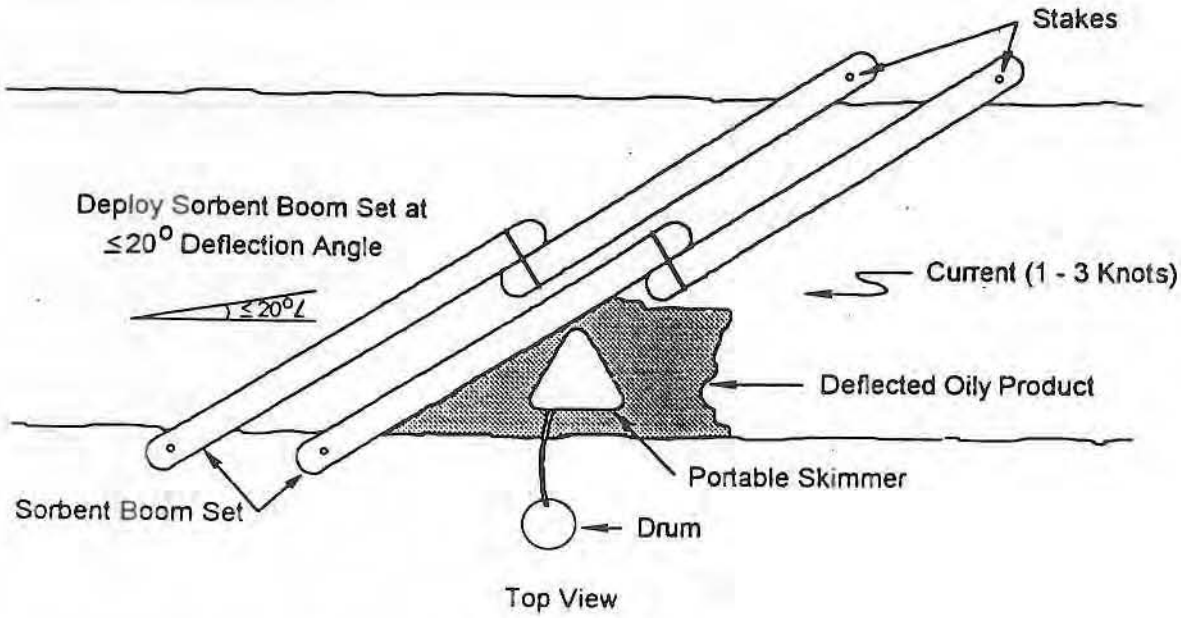

Figure 19b. Sorbent Boom 2

Follow these instructions for using Sorbent Boom 2:

- Use sorbent boom in paired lengths to assure minimal leakage.
- If current is evident, assure deflection angle is 20 degrees or less.
- Oily product will collect at apex of sorbent boom/shoreline angle. Use sorbent matting and pads, or portable skimmers to clean oily product.

Sorbent Booms for Drainage Ditches, Canals, and Rivers (1-3 knots of current)

Sorbent boom was designed to provide very *limited containment or deflection capability,* while absorbing oily product (Figures 19c). Sorbent boom is an operational compromise between flat sorbent matting and standard skirted containment boom. Flat sorbents offer the most surface area for soaking up oil, but have no containment or deflection capabilities. Traditional skirted oil boom contains or deflects oily product, but absorbs nothing. A sorbent boom is most effective when used in conjunction with sorbent matting or pads, *but only in light currents.* Sorbent boom is available in 4, 8, 10, and 20 foot lengths and 4, 6, and 8 inch diameters.

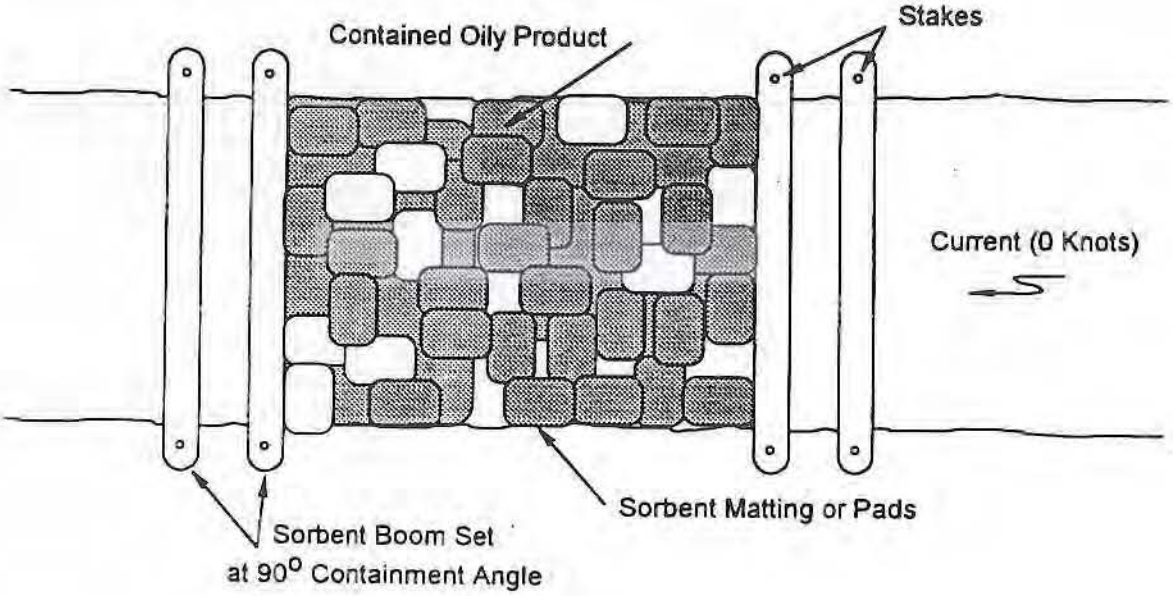

Top View

Figure 19c. Sorbent Boom 3

Follow these instructions for using Sorbent Boom 3:

- Use sorbent boom in paired lengths to contain oily product and assure minimal leakage.
- Sorbent matting or pads can be used inside the sorbent booming to clean oily product.
- If available, portable skimmers can be used to clean oily product from open water. Sorbent matting or pads must still be used to clean shoreline areas.
- Should sorbent matting and pads, or portable skimmers be unavailable, a third set of sorbent booms walked back and forth, may be used to clean oily product.

Sorbent Booms for Drainage Ditches, Canals, and Rivers (1-3 knots of current)

Sorbent boom was designed to provide very *limited containment or deflection capability,* while absorbing oily product (Figures 19d). Sorbent boom is an operational compromise between flat sorbent matting and standard skirted containment boom. Flat sorbents offer the most surface area for soaking up oil, but have no containment or deflection capabilities. Traditional skirted oil boom contains or deflects oily product, but absorbs nothing. A sorbent boom is most effective when used in conjunction with sorbent matting or pads, *but only in light currents.* Sorbent boom is available in 4, 8, 10, and 20 foot lengths and 4, 6, and 8 inch diameters.

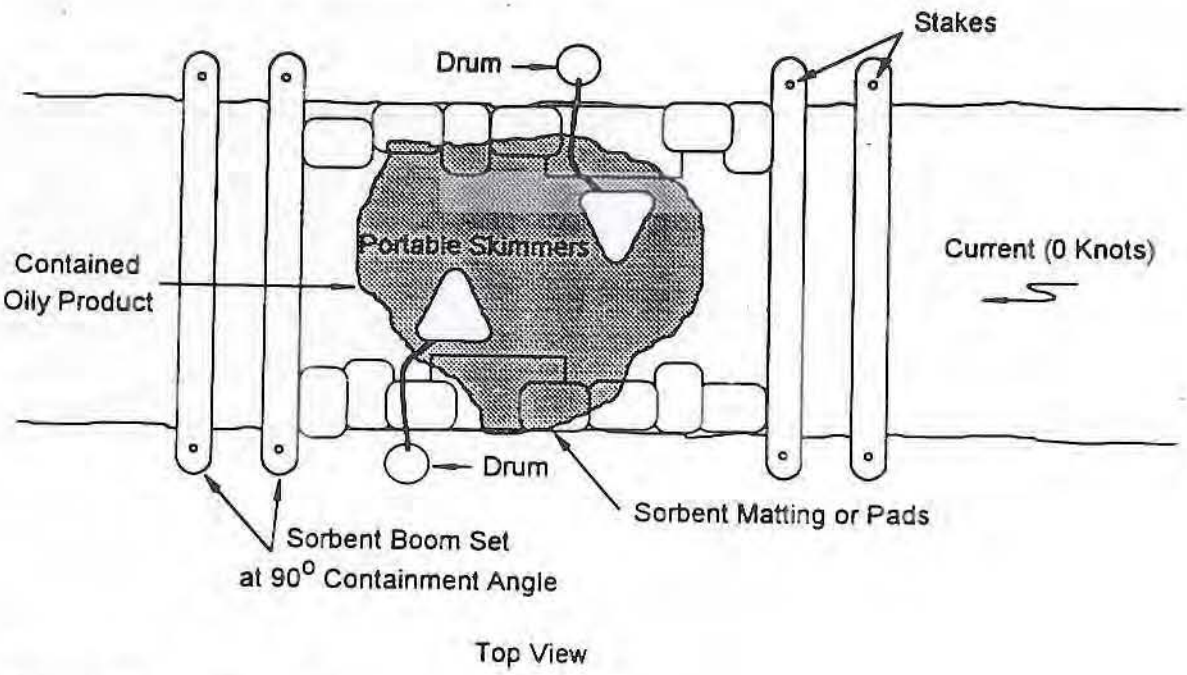

Figure 19d. Sorbent Boom 4

Follow these instructions for using Sorbent Boom 4:

- Use sorbent boom in paired lengths to contain oily product and assure minimal leakage.
- Sorbent matting or pads can be used inside the sorbent booming to clean oily product.
- If available, portable skimmers can be used to clean oily product from open water. Sorbent matting or pads must still be used to clean shoreline areas.
- Should sorbent matting and pads, or portable skimmers be unavailable, a third set of sorbent booms walked back and forth, may be used to clean oily product.

Sorbent Booms for Drainage Ditches, Canals, and Rivers (1-3 knots of current)

Sorbent boom was designed to provide very *limited containment or deflection capability,* while absorbing oily product (Figures 19e). Sorbent boom is an operational compromise between flat sorbent matting and standard skirted containment boom. Flat sorbents offer the most surface area for soaking up oil, but have no containment or deflection capabilities. Traditional skirted oil boom contains or deflects oily product, but absorbs nothing. A sorbent boom is most effective when used in conjunction with sorbent matting or pads, *but only in light currents.* Sorbent boom is available in 4, 8, 10, and 20 foot lengths and 4, 6, and 8 inch diameters.

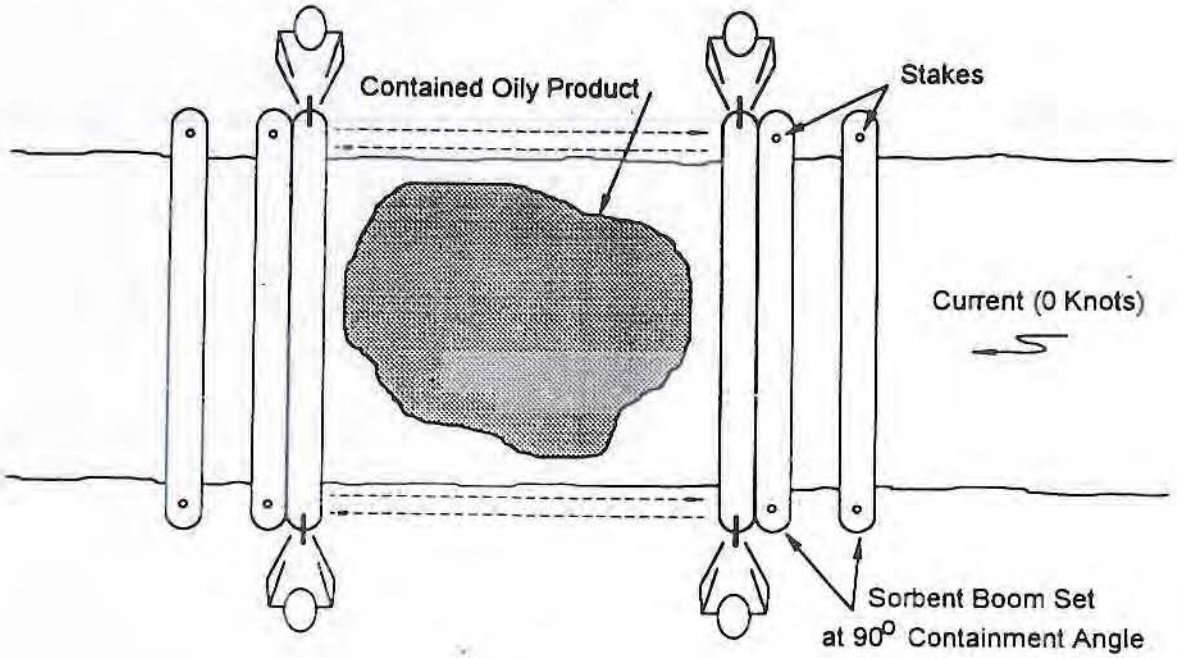

Top View

Figure 19e. Sorbent Boom 5

Follow these instructions for using Sorbent Boom 5:

- Use sorbent boom in paired lengths to contain oily product and assure minimal leakage.
- Sorbent matting or pads can be used inside the sorbent booming to clean oily product.
- If available, portable skimmers can be used to clean oily product from open water. Sorbent matting or pads must still be used to clean shoreline areas.
- Should sorbent matting and pads, or portable skimmers be unavailable, a third set of sorbent booms walked back and forth, may be used to clean oily product.

APPENDIX T
FRAMEWORK STORMWATER POLLUTION PREVENTION PLAN

TABLE OF CONTENTS

T1.0 INTRODUCTION 1

T2.0 PLAN PURPOSE 1

T3.0 PLAN UPDATES 1

T4.0 NOTIFICATION REQUIREMENTS AND IMPLEMENTATION 2

T5.0 PROJECT MODIFICATIONS 3

T6.0 OTHER SPECIFIC STIPULATIONS AND METHODS 4

T6.1 MITIGATION MAINTENANCE, INSPECTION, REPAIR, AND MONITORING 4
T6.2 TRAINING 4
T6.3 POST-CONSTRUCTION STORMWATER MANAGEMENT 4

ACRONYMS

Applicant	TransWest Express LLC, also TransWest
BMP	Best Management Practice
CDPHE	Colorado Department of Public Health and Environment
CFR	Code of Federal Regulations
CWA	Clean Water Act
EPA	United Stated Environmental Protection Agency
NAC	Nevada Administration Code
NDEP	Nevada Division of Environmental Protection
NOI	Notice of Intent
NPDES	National Pollutant Discharge Elimination System
NTP	Notice to Proceed
Plan	Stormwater Pollution Prevention Plan, also SWPPP
POD	Plan of Development
Project	TransWest Express Transmission Project, also TWE Project
ROD	Record of Decision
SWMPs	Stormwater Management Plans
SWPPP	Stormwater Pollution Prevention Plan, also Plan
TransWest	TransWest Express LLC, also Applicant
TWE Project	TransWest Express Transmission Project, also Project
UDEQ	Utah Department of Environmental Quality
WDEQ	Wyoming Department of Environmental Quality
WYPDES	Wyoming pollutant Discharge Elimination System

T1.0 INTRODUCTION

This framework Stormwater Pollution Prevention Plan (SWPPP or Plan) addresses measures to be undertaken by TransWest Express LLC (TransWest or Applicant) and its Construction Contractor(s) to prevent stormwater pollution to comply with Section 402 of the Clean Water Act (CWA) administered by the United States Environmental Protection Agency (EPA) for the TransWest Express Transmission Project (TWE Project or Project). All construction site operators engaged in clearing, grading, and excavating activities that disturb one acre or more, must obtain a National Pollutant Discharge Elimination System (NPDES) permit for stormwater discharges (Code of Federal Regulations [CFR], Title 40, Parts 122 and 123). NPDES permits (also called Construction General Permits) are issued by the EPA or similar authorized state entity following submittal of a Notice of Intent (NOI) for construction activities, and preparation of a SWPPP that describes how erosion and sediment transport will be minimized to adjacent water bodies.

SWPPPs will be necessary for the TWE Project to support NPDES permitting through the following state agencies: Wyoming Department of Environmental Quality (WDEQ), Colorado Department of Public Health and Environment (CDPHE), Utah Department of Environmental Quality (UDEQ), and Nevada Division of Environmental Protection (NDEP).

T2.0 PLAN PURPOSE

The purpose of a SWPPP is to identify and implement stormwater pollution prevention measures to reduce the quantity of impacted runoff and to deal with runoff in a manner that minimizes environmental impacts during construction of the Project. The proper implementation of mitigation measures associated with a SWPPP is imperative during all construction activities. These activities will be conducted in an environmentally sensitive and responsible manner so no discharge of sediment or contaminants may be conveyed as either direct or indirect discharge to wetlands, other waters of the U.S. or state waters.

Final development, implementation and maintenance of the SWPPP will be the responsibility of the Construction Contractor. The SWPPP will do the following:

- Define the characteristics of the site and the types of construction that will occur at each site.
- Describe the practices which will be implemented to control erosion and the release of pollutants in stormwater.
- Create an implementation schedule to ensure the practices described in the SWPPP are in fact implemented and to evaluate the plan's effectiveness in reducing erosion, sedimentation and pollutant levels in stormwater discharge from the site.
- Describe the final stabilization design to minimize erosion and prevent stormwater impacts after construction is complete.

T3.0 PLAN UPDATES

This Plan will be updated for the Record of Decision (ROD) Plan of Development (POD) based on preliminary engineering and design including the initial layout of all temporary work areas, facilities and access roads for the selected Agency Preferred Alternative. Initial maps and descriptions of stormwater best management practices (BMPs) in relation to disturbed areas and water resources will be provided. The Plan for the Notice to Proceed (NTP) POD will be updated based on final detailed

engineering and design layouts and construction segments or spreads. The Construction Contractor(s) will be responsible for preparing the final SWPPPs for each state agency and submittal of the NOI prior to start of construction.

T4.0 NOTIFICATION REQUIREMENTS AND IMPLEMENTATION

Before construction begins, the Construction Contractor(s) will be responsible for developing final SWPPPs and obtaining coverage under the applicable NPDES Construction General Permits by filing NOIs and appropriate fees with WDEQ, CDPHE, UDEQ, and NDEP for a Large Construction General Permit in accordance with NOI instructions. The Construction Contractor(s) will be responsible for implementing site-specific SWPPPs and is required to perform routine inspections throughout the duration of construction activities.

The primary intent of the erosion and sediment control measures is to control and minimize erosion at the source. The main source of potential stormwater contamination will be erosion of soils from construction activities. It will be the responsibility of the Construction Contractor(s) to implement erosion control measures where necessary, in order to minimize pollutants in stormwater and to keep the Project in compliance with EPA, WDEQ, CDPHE, UDEQ, and NDEP regulations.

The following SWPPPs will be required for construction of the Project:

- Wyoming SWPPP – The State of Wyoming Large Construction General Permit for stormwater discharges associated with large construction activities (Permit WYR 100000) regulates stormwater discharges from all construction activities that disturb five or more acres. Under this permit, “operators” who are required to obtain a Wyoming Pollutant Discharge Elimination System (WYPDES) permit to discharge stormwater must prepare a SWPPP and submit it along with a NOI to the WDEQ 30 days before beginning construction activities. The SWPPP describes potential pollution sources and the BMPs which will be used to prevent stormwater contamination. The NOI describes the construction project and route(s) that stormwater may take from the construction site to surface waters of the state.

  WDEQ reviews the NOI to determine if the operator may discharge stormwater under the general permit, or if an individual WYPDES permit is required.

- Colorado Stormwater Management Plans (SWMPs) – The General Permit in Colorado for stormwater discharges associated with construction activities (Permit COR 030000) regulates stormwater discharges from all construction activities that disturb one acre or more. Prior to commencement of construction, a SWMP shall be developed and implemented for each facility covered by the general permit. A certification that the SWMP is complete must be submitted with the permit application. The SWMP shall identify potential sources of pollution (including sediment) which may reasonably be expected to affect the quality of stormwater discharges associated with construction activity. In addition, the plan shall describe the BMPs which will be used to reduce the pollutants in stormwater discharges from the construction site. Operators must implement the provisions of their SWMP as a condition of this permit.

  If, after evaluation of the application (or additional information, such as the SWMP), it is found that this general permit is not appropriate for the operation, then the application will be processed as one for an individual permit.

- Utah SWPPP – The Utah Stormwater General Permit for Construction Activities (Permit UTR 300000) regulates stormwater discharges from all construction activities that disturb one acre or more. A SWPPP shall be developed for each construction project covered by this permit prior to submission of an NOI. A SWPPP shall be prepared in accordance with good engineering practices. The SWPPP shall identify potential sources of pollution which may reasonably be expected to affect the quality of stormwater discharges from the construction site, shall describe and ensure the implementation of practices which will be used to reduce the pollutants in stormwater discharges associated with construction activity at the construction site and to assure compliance with the terms and conditions of this permit and shall otherwise meet the requirements of this permit.

  This authorization is subject to the authority of the Utah Water Quality Board or the Executive Secretary of the Utah Water Quality Board to reopen this permit, or to require a discharger to obtain an individual permit or use an alternative general permit.

- Nevada SWPPP – The Nevada Construction Stormwater General Permit (NVR100000) regulates stormwater discharges from all construction activities that disturb at least one acre. Prior to submitting the NOI and filing fee, the SWPPP shall be completed and available for inspection at the project site for each construction project and material plant or operation covered by this permit. The purpose of the SWPPP is to identify stormwater pollution sources, reduce their impacts, and comply with the conditions of this permit. The SWPPP shall be prepared in accordance with good engineering practices and shall consist of project information, BMPs, inspection and maintenance, controls for non-stormwater discharges, and a description of permanent stormwater controls that will be built as part of the project.

  NDEP may require the holder of a general stormwater permit to apply for and obtain an individual permit in accordance with Nevada Administrative Code (NAC) 445A.269.

A copy of the applicable SWPPP shall remain with the Construction Manager on the construction site or at a staging area(s). The SWPPP must be readily available while the transmission line, terminals, ground electrodes and all other associated facilities are under construction, from the start of construction activities until the Notice of Termination.

The Construction Contractor(s) must retain a set of construction site maps for the duration of the Project and for three years after the Notice of Termination, that delineates the following items:

- Areas of soil disturbance that have been stabilized;
- Areas to be graded along with a time schedule;
- Areas of potential soil erosion where control practices will be implemented;
- Types of control practices and time schedule for implementation;
- Locations of any post-construction projects; and
- Copies of all inspections performed over the duration of the Project.

T5.0 PROJECT MODIFICATIONS

The Construction Contractor(s) is responsible for maintaining a current SWPPP and shall amend the SWPPP whenever there is a change in construction or operations that may affect the discharge of pollutants to surface waters or groundwater. The SWPPP shall also be amended if it is in violation of

the General Permit or has not achieved the general objective of eliminating pollutants in stormwater discharges. The SWPPP shall be amended and implemented in a timely manner, but in no case more than 14 days after it has been determined that the SWPPP is inadequate. All amendments should be dated and directly attached to the SWPPP per agency regulations.

T6.0 OTHER SPECIFIC STIPULATIONS AND METHODS

T6.1 Mitigation Maintenance, Inspection, Repair, and Monitoring

The Construction Contractor(s) shall at all times properly operate and maintain all erosion and sediment control treatments, measures and techniques. Proper operation and maintenance will also include appropriate quality assurance procedures.

As part of the SWPPP, the Construction Contractor(s) will be required to develop an inspection schedule and conduct routine inspections to identify conditions that could lead to discharges of pollutants or contact stormwater with storm drainages or surface waters. Schedules will be established for regular inspections of equipment, and erosion and sediment control measures. Inspections of the construction site shall occur in accordance with each applicable state General Permit to identify areas contributing to a stormwater discharge and to evaluate whether industry standards are in place and functioning properly. During inspections, the Construction Contractor(s) will also determine if the industry standards identified in the SWPPP are adequate and whether additional control measures are needed. All monitoring and inspection records which have been produced in association with the SWPPP will be retained for a period of at least three years.

To monitor the mitigation's effectiveness and to evaluate whether additional mitigation measures are required a monitoring program and reporting system will be established by the Construction Contractor(s) and followed per the applicable state and federal requirements and guidelines.

T6.2 Training

The Construction Contractor(s) will be responsible for the SWPPP implementation, amendments and revisions. On-site construction personnel will be responsible for installation and maintenance of on-site mitigation measures.

Properly trained personnel are more capable of preventing spills, responding safely and effectively to accidents and recognizing situations that could lead to stormwater contamination. The Construction Contractor(s) will be responsible for familiarizing personnel with the information contained in the SWPPP. Training meetings will need to be held for new personnel who join the Project after the initial training has been provided. The purpose of these meetings will be to review the proper installation methods and maintenance of all erosion control measures to be used for the TWE Project. The monitoring/inspection program and all required maintenance and repair will be conducted by trained personnel.

T6.3 Post-Construction Stormwater Management

Mitigation measures used to reduce pollutants in stormwater discharges after all construction phases are complete, should take into account local post-construction stormwater management requirements, policies and guidelines, as well as site-specific and seasonal conditions. Post-construction mitigation measures will be assessed during future transmission line maintenance. Any areas disturbed by Project construction that are observed to be eroding sediment into drainages will be assessed for the appropriate permanent mitigation measure to control sediment movement off the disturbed area. Disturbed areas will also be reclaimed per Appendix Q – Reclamation Plan.

APPENDIX U
FRAMEWORK TRAFFIC AND TRANSPORTATION MANAGEMENT PLAN

TABLE OF CONTENTS

U1.0 INTRODUCTION 1
U2.0 PLAN PURPOSE 1
U3.0 PLAN UPDATES 1
U4.0 REGULATORY 1
U5.0 TRAFFIC MANAGEMENT PRACTICES 2
U6.0 DESIGN FEATURES AND BMPS 3

ACRONYMS

Applicant	TransWest Express LLC, also TransWest
BLM	Bureau of Land Management
BMP	Best Management Practice
DEIS	Draft Environmental Impact Statement
NTP	Notice to Proceed
Plan	Traffic and Transportation Management Plan
POD	Plan of Development
Project	TransWest Express Transmission Project, also TWE Project
ROD	Record of Decision
ROW	right-of-way
TransWest	TransWest Express LLC, also Applicant
TWE Project	TransWest Express Transmission Project, also Project
USFS	United States Forest Service

U1.0 INTRODUCTION

This framework Traffic and Transportation Management Plan (Plan) presents mitigation measures to be used by TransWest Express LLC (TransWest or Applicant) and its Construction Contractor(s) to minimize impacts on roads, traffic, and other users of roads that could result from construction of the TransWest Express Transmission Project (TWE Project or Project). A detailed Plan will be prepared by the Construction Contractor(s) for each construction segment or spread that demonstrates how the measures specified herein will be implemented in the field.

U2.0 PLAN PURPOSE

The purpose of this Plan is to mitigate, supplement, and further outline measures required of TransWest and its Construction Contractor for safe equipment access to the right-of-way (ROW) and temporary work areas during project construction and to address potential transportation related impacts and provide for public safety. The primary objective of this Plan is to prevent adverse impacts to human health and safety, property, and the environment that could potentially occur as a result of the construction, operation and maintenance of the TWE Project.

U3.0 PLAN UPDATES

This Plan will be updated for the Record of Decision (ROD) Plan of Development (POD) based on the selected Agency Preferred Alternative and use of existing public roads and highways (backbone access network) for construction access and transportation of equipment. The Plan for the Notice to Proceed (NTP) POD will include updates as needed based on final design and engineering. The Construction Contractor(s) will be responsible for preparing and implementing the final Plan in compliance with local, state, and federal regulations pertaining to project impacts to traffic and transportation.

U4.0 REGULATORY

A number of agencies have jurisdiction over the transportation related components of the TWE Project. These include the Bureau of Land Management (BLM), United States Forest Service (USFS), Federal Highway Administration, Nevada Department of Transportation, Utah Department of Transportation, Wyoming Department of Transportation, Colorado Department of Transportation, State Highway Patrols, and local county road departments and law enforcement. Encroachment permit applications will need to be filed with the applicable jurisdictional agencies in areas where the transmission line crosses public roads or where construction activities would take place within road ROW. Depending on the type of construction and encroachment, TransWest and its Construction Contractor(s) may be required to develop and have approved a traffic control plan prior to construction.

Cities, counties, and other public agencies typically require an encroachment permit or similar authorization for locations where road construction activities would occur within or above the public road ROW. The specific requirements of the encroachment permit from the applicable transportation agency would be individually determined based on Project and jurisdiction specifics. The encroachment permit issued by federal, state, and local jurisdictions may include the following requirements:

- Identify all roadway locations where special construction techniques such as night construction would be used to minimize impacts to traffic flow;

- If necessary, develop circulation and detour plans to minimize impacts to local street circulation, which may include the use of signing and flagging to guide vehicles through and/or around the construction zone;
- To the extent practicable, schedule truck trips outside of peak morning and evening commute hours;
- Limit lane closures during peak hours to the extent practicable;
- Include detours for areas potentially affected by Project construction;
- Install temporary traffic control devices as specified in the Federal Highway Administration's 2009 Manual of Uniform Traffic Control Devices for Streets and Highways; and
- Store construction materials only in designated areas.

Encroachment permit requirements would be specified by the agency having jurisdiction. Implementation of the terms and conditions of an encroachment permit would reduce impacts associated with road closures.

U5.0 TRAFFIC MANAGEMENT PRACTICES

TransWest and its Construction Contractor(s) will require surface access to all structures and work areas during construction and operation of the Project to allow construction vehicles and equipment to access the location of each transmission structure or Project facility. In most cases, existing public roads (identified as the backbone access network) would be used to transport construction equipment to the approved work areas. Helicopters may be used to support some construction activities in select locations as determined by agency requirements and Construction Contractor work planning. All vehicles will obey the posted speed limits and local traffic speed regulations.

Every effort will be made to minimize the effects of the Project construction activities on public transportation and to provide for public safety. The Construction Contractor(s) will maintain a communication network consisting of one or both of the following devices: two-way radios or cellular phones. This will allow for coordination of equipment traffic along existing access roads so that public safety, traffic impacts, and resource impacts are minimized. In addition, all necessary permits for the transportation of equipment and materials will be obtained and complied with.

Although the number of construction vehicles needed for the Project is not expected to substantially increase traffic volumes, the delivery of large pieces of equipment or material as part of the construction process may slow or interrupt traffic on state or county roads on a short-term basis. The duration of these types of traffic disruption are typically very short, a few minutes or less while the delivery truck passes down a roadway or turns a corner. The limited number of large pieces of equipment or material that are delivered to any one portion of the Project tends to make traffic disruptions infrequent and generally unnoticed by the motoring public. Additionally, short-term traffic diversions and brief road closures (if needed) may be required to complete wire stringing activities. All traffic impacts resulting from any construction activities including short-term traffic diversions, traffic congestion, traffic warning systems and brief road closures (if needed).

Incremental increases in traffic would not cause congestion that exceeds appropriate levels of service. Only minor delays from road and railroad crossings might occur. If road and lane closures are needed,

the appropriate regulatory agencies, affected parties, and emergency service providers will be notified in advance and required procedures followed.

U6.0 DESIGN FEATURES AND BMPS

In addition to applicable design and operational standards, regulations, laws, and permit requirements, the following design features and best management practices (BMPs) have been developed by TransWest to avoid or minimize potential traffic and safety related impacts.

TWE-9: All construction vehicle movement outside the ROW normally will be restricted to pre-designated access or public roads.

Additional BMPs and Mitigation Measures identified in the Draft Environmental Impact Statement (DEIS) are listed below. The identified BMPs and Mitigation Measures have not been finalized at this time and may be updated, changed, or eliminated in future revisions of this Plan.

TRAN-2: The Applicant shall prepare a comprehensive transportation plan for the transport of transmission tower or pipeline components, main assembly cranes, and other large equipment. The plan should address specific sizes, weights, origin, destination, and unique equipment handling requirements. The plan should evaluate alternative transportation routes and should comply with state regulations and all necessary permitting requirements. The plan should address site access roads and eliminate hazards from truck traffic or impacts to normal traffic flow. The plan should include measures such as informational signage and traffic controls that may be necessary during construction or maintenance of facilities.

TRAN-3: The Applicant shall consult with local planning authorities regarding increased traffic during the construction phase, including an assessment of the number of vehicles per day, their size, and type. Specific issues of concern (e.g., location of school bus routes and stops) should be identified and addressed in the traffic management plan.

TRAN-4: Additional access roads needed for decommissioning shall follow the paths of access roads established during construction to the greatest extent possible; all access roads not required for the continued operation and maintenance of other energy systems present in the corridor shall be removed and their footprints reclaimed and restored.

PHS-5: The health and safety program shall establish a safety zone or setback from roads and other public access areas that is sufficient to prevent accidents resulting from various hazards. It should identify requirements for temporary fencing around staging areas, storage yards, and excavations during construction or decommissioning activities. It should also identify measures to be taken during the operations phase to limit public access to those components of energy facilities that present health or safety risks.

PHS-7: In addition to directives contained in other appendices in this plan, the applicant must identify all federal, state, and local regulations pertaining to environmental protection, worker health and safety, public safety, and system reliability that are applicable throughout the construction, operation, and decommissioning phases of their facility's life cycle and must develop appropriate compliance strategies, including securing all necessary permits and approvals.

APPENDIX V
FRAMEWORK VISUAL RESOURCES MANAGEMENT PLAN

TABLE OF CONTENTS

V1.0 INTRODUCTION 1

V1.1 PLAN PURPOSE 1
V1.2 PLAN UPDATES 1
V1.3 AGENCY-SPECIFIC LAWS, REGULATIONS AND STANDARDS 1
V1.3.1 Bureau of Land Management 3
V1.3.2 United States Forest Service 3
V1.3.3 National Park Service 5
V1.3.4 Other Agencies and Private Landowners 5
V1.4 TIMELINE 5
V1.5 RESPONSIBLE PARTIES 5

V2.0 EXISTING VISUAL RESOURCES 5

V2.1 SENSITIVE VIEWPOINTS 5
V2.2 SENSITIVE LANDSCAPES 5
V2.3 AGENCY VISUAL MANAGEMENT OBJECTIVES 5
V2.4 PRIVATE LANDOWNER CONCERNS 5

V3.0 ENVIRONMENTAL MITIGATION MEASURES 6

V3.1 WWEC CORRIDOR BEST MANAGEMENT PRACTICES 6
V3.2 APPLICANT COMMITTED DESIGN FEATURES 9
V3.3 BLM STIPULATIONS APPLICABLE TO TRANSMISSION LINES 9
V3.3.1 Additional BLM Stipulations Identified During NEPA Process 12
V3.4 USFS STANDARDS AND GUIDELINES 12
V3.4.1 Additional USFS Stipulations Identified During NEPA Process 12
V3.5 DEIS IDENTIFIED MITIGATION MEASURES 13

V4.0 MONITORING AND COMPLIANCE 14

V5.0 REFERENCES 14

TABLES:

TABLE V1 BLM VISUAL MANAGEMENT SYSTEM CLASS DESCRIPTIONS 3
TABLE V2 USFS VISUAL MANAGEMENT SYSTEMS AND CLASS DESCRIPTIONS 4
TABLE V3 WEST-WIDE ENERGY CORRIDOR FINAL PROGRAMMATIC ENVIRONMENTAL IMPACT STATEMENT BEST MANAGEMENT PRACTICES 7
TABLE V4 APPLICANT COMMITTED DESIGN FEATURES 9
TABLE V5 BLM FIELD OFFICE USE RESTRICTIONS RELATED TO VISUAL RESOURCES 10
TABLE V6 NATIONAL FOREST VISUAL RESOURCE STANDARDS, GUIDELINES AND USE RESTRICTIONS 12

ACRONYMS

Applicant	TransWest Express LLC, also TransWest
BLM	Bureau of Land Management
BMP	Best Management Practice
CFR	Code of Federal Regulations
COA	Condition of Approval
COM Plan	Construction, Operation, and Maintenance Plan
CSU	Controlled Surface Use
DEIS	Draft Environmental Impact Statement
DEM	digital elevation model
EIS	Environmental Impact Statement
EMM	Environmental Mitigation Measure
FEIS	Final Environmental Impact Statement
FLPMA	Federal Land Policy and Management Act of 1976
FO	Field Office
GPS	global positioning system
KOP	Key Observation Point
LRMP	Land and Resource Management Plan
NEPA	National Environmental Policy Act of 1969
NHPA	National Historic Preservation Act
NPS	National Park Service
NSU	No Surface Use
NTP	Notice to Proceed
OHV	off-highway vehicle
OSHA	Occupational Safety and Health Administration
Plan	Visual Resource Management Plan
POD	Plan of Development
Project	TransWest Express Transmission Project, also TWE Project
RMP	Resource Management Plan
ROD	Record of Decision
ROW	right-of-way
SIO	Scenic Integrity Objective
SMS	Scenery Management System
SRMA	Special Recreation Management Area
TransWest	TransWest Express LLC, also Applicant
TWE Project	TransWest Express Transmission Project, also Project
U.S.C.	United States Code
USFS	United States Forest Service
VMS	Visual Management System
VQO	Visual Quality Objective
VRM	Visual Resource Management
WWEC	West-wide Energy Corridor

V1.0 INTRODUCTION

This framework Visual Resources Management (Plan) describes the framework for the development of the detailed Visual Resources Management Plan to be implemented by TransWest Express LLC (TransWest or Applicant) and its Construction Contractor(s) for the TransWest Express Transmission Project (TWE Project or Project).

This Plan focuses on the implementation of West-wide Energy Corridor (WWEC) Final Programmatic Environmental Impact Statement (EIS) Best Management Practices (BMPs), Applicant Committed Design Features, State and Bureau of Land Management (BLM) Stipulations, United States Forest Service (USFS) Standards and Guidelines, and mitigation measures identified in the Draft Environmental Impact Statement (DEIS) designed to reduce visual impacts of the TWE Project, as applicable. These measures are collectively referred to as Environmental Mitigation Measures (EMMs).

V1.1 Plan Purpose

The focus of this framework Plan is to minimize visual contrasts created by Project construction, operation, and maintenance, and to provide an implementation strategy for EMMs. This Plan is applicable Project-wide and will be updated based on the selected Agency Preferred Alternative and final engineering and design of the Project. TransWest and its Construction Contractor(s) would be responsible for carrying out the methods described in this Plan. This Plan is based on the existing conditions, visual impacts, and mitigation measures identified in the DEIS. Project design features, BMPs, and required stipulations are applicable to the design, construction and operation of the TWE Project, regardless of which alternative is selected in the Record of Decision (ROD).

The goals of this Plan are to minimize visual contrasts created by the TWE Project in compliance or conformance with agency or landowner visual management requirements by:

1. Summarizing areas of visual concern in Project affected areas;

2. Providing guidance during the design, construction and operation of the Project to applicable parties that address visual impacts and impact-reducing measures identified during the National Environmental Policy Act of 1969 (NEPA) process; and

3. Providing a framework methodology for the implementation of impact-reducing EMMs.

V1.2 Plan Updates

An updated Plan will be completed with the ROD Plan of Development (POD) which will include visual resource mitigation measures based on the selected Agency Preferred Alternative. For the Final Notice to Proceed (NTP) POD, the Plan will be updated to include any specific locations of visual resource mitigation requirements and any updates as required by the appropriate agencies. The Construction Contractor(s) will be responsible for implementing the final Visual Resources Management Plan.

V1.3 Agency-Specific Laws, Regulations and Standards

The USFS, National Park Service (NPS), and the BLM are responsible for managing scenery on public lands by ensuring that visual and scenic values of public lands are considered before allowing uses that may have negative effects on those values.

The Federal Land Policy and Management Act (FLPMA) of 1976 directs the way public lands are administered by the BLM. The following sections of the FLPMA relate to the management of visual resources on federal lands:

- § 102(a) (8) states that "…the public lands be managed in a manner that will protect the quality of the…scenic…values…"
- § 103(c) identifies "scenic values" as one of the resources for which public land will be managed.
- § 201(a): states that "The Secretary shall prepare and maintain on a continuing basis an inventory of all public lands and their resources and other values (including…scenic values)."
- § 202(c)(1-9): "...in developing land use plans, the BLM shall use…the inventory of the public lands; consider present and potential uses of the public lands, consider the scarcity of the values involved and the availability of alternative means and sites for realizing those values; weigh long-term benefits to the public against short term benefits."
- § 505(a): "Each right-of-way shall contain terms and conditions which will … (ii) minimize damage to the scenic and esthetic values" (BLM 2001).

NEPA, 43 United States Code (U.S.C.) § 4321 *et seq*. also addresses scenic values of public lands:

- § 101(b)(2) "assure for all Americans...esthetically…pleasing surroundings;"
- § 102 (A) Requires agencies to "utilize a systematic, interdisciplinary approach which will insure the integrated use of the natural and social sciences and the environmental design arts in planning and in decision making."

As mandated under the Organic Act (16 U.S.C. §1; NPS 1916), all visual resources and scenic quality within national parks are to be conserved and managed in an unimpaired condition for the enjoyment of future generations. However, the Agency Preferred and the Applicant Proposed alternatives do not cross lands managed by the NPS, although they may be within the viewshed of park lands or primary roads accessing those lands.

National trails were established under the National Trail System Act of 1968 (16 U.S.C. §1241-51), designating and protecting national scenic trails, national historic trails, and national recreational trails. National trails are administered by the BLM, NPS, and USFS; these agencies provide coordination and oversight for the entire length of a trail. However, as these trails traverse both public and private lands as well as lands controlled by various agencies, on-site management activities are performed by the jurisdictional agency, the state, or the landowner (NPS 2008).

The National Historic Preservation Act (NHPA) includes language protecting the visual integrity of sites listed or eligible for the National Register of Historic Places: "Examples of adverse effects… …include…introduction of visual, atmospheric, or audible elements that diminish the integrity of the property's significant historic features…" (36 Code of Federal Regulations [CFR] Part 800.5). Impacts to visual resources protected by the NHPA and associated mitigation measures are discussed in Appendix D - Cultural Resources Protection and Management Plan.

V1.3.1 Bureau of Land Management

The BLM manages land under its jurisdiction according to the goals and policies outlined in their Resource Management Plans (RMPs). Visual Resource Management (VRM) classifications are developed by BLM based on landscape character, scenic quality, sensitivity levels, distance zones, and management direction as outlined in BLM Manual 8400, Handbook H-8410-Visual Resource Management (BLM 1986a). Each of four VRM Classes has an objective that prescribes the amount of change allowed in the characteristic landscape: Class I (no change); Class II (minor change); Class III (moderate change); and Class IV (major change). Compliance with VRM Classes is determined by evaluating project contrasts, estimating project contrast level, and comparing the contrast level with the established VRM Class (see Table V1 below). Contrast is determined using BLM Handbook H-8431-1-Visual Resource Contrast Rating (BLM 1986b). Mitigation measures were prescribed in the Draft Environmental Impact Statement (DEIS) where the TWE Project would be non-compliant with the VRM Classes based on contrast ratings. Mitigation measures may also be applied in other areas to reduce TWE Project contrast.

TABLE V1 BLM VISUAL MANAGEMENT SYSTEM CLASS DESCRIPTIONS

VRM CLASS	VISUAL OBJECTIVE
Class I	The objective of this class is to preserve the existing character of the landscape. This class provides for natural ecological changes; however, it does not preclude very limited management activity. The level of change to the characteristic landscape should be very low and must not attract attention.
Class II	The objective to this class is to retain the existing character of the landscape. The level of change to the characteristic landscape should be low. Management activities may be seen, but should not attract the attention of the casual observer. Any changes must repeat the basic elements of form, line, color, and texture found in the predominant natural features of the characteristic landscape.
Class III	The objective of this class is to partially retain the existing character of the landscape. The level of change to the characteristic landscape should be moderate. Management activities may attract attention but should not dominate the view of the casual observer. Changes should repeat the basic elements found in the predominant natural features of the characteristic landscape.
Class IV	The objective of this class is to provide for management activities which require major modification of the existing character of the landscape. The level of change to the characteristic landscape can be high. These management activities may dominate the view and be the major focus of viewer attention. However, every attempt should be made to minimize the effects of these activities through careful location, minimal disturbance, and repeating the basic elements.

V1.3.2 United States Forest Service

The USFS Land and Resource Management Plans (LRMP) developed for each forest guides all natural resource management activities and establishes management standards and guidelines for scenery within the national forests. The LRMP identifies Scenic Integrity Objectives (SIOs) (management level) in forest management areas established under the most current Scenery Management System (SMS). Visual Quality Objectives (VQOs) were developed under the Visual Management System (VMS), which was superseded by the SMS (USFS 1995). SIOs and VQOs each prescribe the level of visible change allowable within forest boundaries (see Table V2 below). Consistency with SIOs and VQOs is determined by comparison of the objective or integrity level of the applicable VQO or SIO, respectively, with the object or integrity level resulting from the proposed project. Mitigation measures were identified in the DEIS where the TWE Project would be inconsistent with the VQOs or SIOs.

TABLE V2 USFS VISUAL MANAGEMENT SYSTEMS AND CLASS DESCRIPTIONS

USFS VISUAL MANAGEMENT SYSTEM-VISUAL QUALITY OBJECTIVES (VQO)	
Management Level	Visual Objective
Preservation	This visual quality objective allows ecological changes only. Management activities, except for very low visual-effect recreation facilities, are prohibited.
Retention	This visual quality objective provides for management activities which are not visually evident. Under retention activities may only repeat form, line, color, and texture which are frequently found in the characteristic landscape. Changes in their qualities of size, amount, intensity, direction, pattern, etc., should not be evident.
Partial Retention	Management activities are visually evident but subordinate to the characteristic landscape when managed according to the partial retention visual quality objective. Activities may repeat form, line, color, or texture common to the characteristic landscape but changes in their qualities of size, amount, intensity, direction, pattern, etc., remain visually subordinate to the characteristic landscape.
Modification	Under the modification visual quality objective management activities may visually dominate the original characteristic landscape. However, activities of vegetative and land form alteration must borrow from naturally established form, line, color, or texture so completely and at such a scale that its visual characteristics are those of natural occurrences within the surrounding area or character type.
Maximum Modification	Management activities of vegetative and landform alterations may dominate the characteristic landscape. However, when viewed as background, the visual characteristics must be those of natural occurrences within the surrounding area or character type. When viewed as foreground or middle-ground, they may not appear to completely borrow from naturally established form, line, color, or texture. Alterations may also be out of scale or contain detail which is incongruent with natural occurrences as seen in foreground or middle ground.
USFS SCENERY MANAGEMENT SYSTEM-SCENIC INTEGRITY OBJECTIVES (SIO)	
Management Level	Visual Objective
Very High	Landscapes where the valued landscape character “is” intact with only minute if any deviations. The existing landscape character and sense of place is expressed at the highest possible level.
High	Landscapes where the valued landscape character “appears” intact. Deviations may be present, but must repeat the form, line, color, texture and pattern common to the landscape character so completely and at such scale that they are not evident.
Moderate	Landscapes where the valued landscape character “appears slightly altered”. Noticeable deviations must remain visually subordinate to the landscape being viewed.
Low	Landscapes where the valued landscape character “appears moderately altered”. Deviations begin to dominate the valued landscape character being viewed but they borrow valued attributes such as size, shape, edge effect and pattern of natural openings, vegetative type changes or architectural styles outside the landscape being viewed. They should not only appear as valued character outside of the area being viewed but compatible or complimentary to the character within.
Very Low	Landscapes where the valued landscape character “appears heavily altered”. Deviations may strongly dominate the valued landscape character. They may not borrow from valued landscape attributes such as size, shape, edge effect and pattern of natural openings, vegetative type changes or architectural styles within or outside the landscape being viewed. However deviations must be shaped and blended with the natural terrain (landforms) so that elements such as unnatural edges, roads, landings, and structures do not dominate the composition.

V1.3.3 National Park Service

The NPS does not have an established methodology for addressing visual management on lands they manage. Visual resource issues are typically detailed in park General Management Plans and mission statements, and the measurement of visual impacts are typically based on project contrasts with the existing visual condition. The NPS may desire specific mitigation measures for the Project where it crosses NPS lands (e.g., Lake Mead National Recreation Area or Dinosaur National Monument).

V1.3.4 Other Agencies and Private Landowners

No state or local visual resource management laws, ordinances, regulations or standards have been identified during the NEPA process according to the DEIS. This section will summarize relevant requirements applicable to other agencies or private landowners.

V1.4 Timeline

The implementation of mitigation measures will occur during design, construction, operation and decommissioning phases of the Project.

V1.5 Responsible Parties

TransWest will have the overall responsibility of directing and monitoring the visual mitigation efforts for the TWE Project. TransWest will be responsible to ensure its Construction Contractors will implement these measures.

V2.0 EXISTING VISUAL RESOURCES

Sensitive visual resources were identified in the DEIS, and will be summarized in the final Plan based on the selected Agency Preferred Alternative identified in the ROD.

V2.1 Sensitive Viewpoints

This section will summarize sensitive viewers and Key Observation Points (KOPs) such as residential areas, parks, overlooks, trails, roads, etc., applicable to the selected Agency Preferred Alternative. Areas of High and Moderate impacts and levels of sensitivity, based on the NEPA analysis, will be summarized.

V2.2 Sensitive Landscapes

This section will summarize final locations of scenic areas based on landscape scenery applicable to the selected Agency Preferred Alternative. Areas of Class A and Class B scenery will be identified based on the Final Environmental Impact Statement (FEIS). Areas of High and Moderate impacts, based on the NEPA analysis will be summarized.

V2.3 Agency Visual Management Objectives

This section will detail applicable agency management classifications and objectives (BLM VRM and USFS SIO/VQOs), as well as local laws, ordinances, regulations and standards applicable to the selected Agency Preferred Alternative.

V2.4 Private Landowner Concerns

This section will detail areas of concern for private landowners where additional mitigation measures would be implemented for the Project.

V3.0 ENVIRONMENTAL MITIGATION MEASURES

The following sections include EMMs related to visual resources and strategies for implementation of each EMM. The suites of WWEC Corridor BMPs, Applicant Committed Design Features, State and BLM Stipulations Applicable to Transmission Lines, USFS Standards and Guidelines, and DEIS Identified Mitigation Measures all identify measures to reduce impacts on visual resources, and are applicable at various stages of the Project - planning, design, construction, operations and maintenance, and decommissioning of the Project. Many EMMs; however, apply to project corridor planning, where the EMM addresses avoidance of restrictive visual management classes (e.g., VRM Class II, High SIO). The identified EMMs have not been finalized at this time and may be updated, changed, or eliminated in future revisions of this Plan.

Visual resource EMMs are often directly related to other resource EMMs. The implementation of other resource EMMs are covered in other plans developed for the POD. Implementation strategies for visual resource EMMs will overlap with the following plans:

- Appendix A: Access Road Siting and Management Plan
- Appendix D: Cultural Resources Protection and Management Plan
- Appendix Q: Reclamation Plan
- Appendix R: ROW Preparation and Vegetation Management Plan

V3.1 WWEC Corridor Best Management Practices

Table V3 below outlines BMPs obtained from the ROD for the WWEC to reduce impacts to visual resources. These BMPs do not include visual resource-specific potential mitigation measures that are recommended in the WWEC Final Programmatic EIS. They include subtopics and the project phase (planning, construction, operation and decommissioning phases) during which each BMP would be implemented. The BMPs address specific environmental impacts to localized conditions and would be prescribed on a case-by-case basis. Typically, the applicability of selective BMPs to a given action is determined in the course of the environmental analysis and during the engineering and design phase of the project.

Most of the WWEC Corridor BMPs, such as those addressing avoidance of VRM Class I and II areas, are applicable during the planning phase of the project. Others apply during construction and operation of the Project.

TABLE V3 WEST-WIDE ENERGY CORRIDOR FINAL PROGRAMMATIC ENVIRONMENTAL IMPACT STATEMENT BEST MANAGEMENT PRACTICES

PDEIS BMP NO.	WWEC IOP NO.	PHASE(S)[1]	WWEC IOP DESCRIPTION
VIS-1	1	P	Applicants shall identify and consider visual resource management (VRM) and scenery management (SMS) issues early in the design process to facilitate integration of VRM and scenery treatments into the overall site development program and construction documents. Visual/scenery management considerations, environmental analyses, mitigation planning, and design shall reference and be in accordance with the land management agency visual/scenery management policies and procedures applicable to the jurisdiction the project lies within. Applicants shall coordinate between multiple agencies on visual/scenery sensitive issues when projects transition from one jurisdiction to another, especially when transitions occur within a shared viewshed.
VIS-2	2	P	Applicants shall prepare a VRM or scenery management plan. The applicant's planning team shall include an appropriately trained specialist, such as a landscape architect with demonstrated VRM and/or SMS experience. The VRM/SMS specialist shall coordinate with the BLM/USFS on the availability of the appropriate visual or scenic inventory data, VRM management class delineations, Scenic Integrity Objectives (SIOs), and federal agency expectations for preparing project plans and mitigation strategies to comply with resource management plan (RMP) or land resource and management plan (LRMP) direction related to scenery and/or visual resources. Applicants shall confirm that a current Visual Resource Inventory and/or Scenic Class inventory is available and that the RMP or LRMP VRM classifications or SIOs have been designated in the current land management plan. Project plans shall abide by the VRM class designations and SIOs and consider sensitivities defined within the visual or scenic resource Inventory. If visual or scenic management objectives are absent, then the proper inventory and classification process shall be followed to develop them in accordance with the BLM VRM manual and handbooks or USFS SMS process, depending on the agency. When the VRM management classes or SIOs are absent, then the project alternatives must reflect a range of management options related to scenery and visual resources that reflect the values identified in the visual/scenic inventory. Responsibility for developing an inventory or VRM management classes (or in the case of the USFS, Scenic Classes and SIOs) will remain with the respective agency, but how to accomplish these tasks will be determined by the Field Office Manager or Forest Supervisor, who will consider the applicant's role and financial participation in completing the work.
VIS-3	3	P	Visual and scenic mitigation planning/design and analysis shall be performed through integrated field assessment, applied global positioning system (GPS) technology, field photo documentation, use of computer-aided design and development software, 3-D modeling GIS software, and visual simulation software, as appropriate. Proposed activities, projects, and site development plans shall be analyzed and further developed using these technologies to meet visual and scenic objectives for the project area and surrounding areas sufficient to provide the full context of the viewshed. Visual simulations shall be prepared according to BLM Handbook H-8432-1, or other agency requirements, to create spatially accurate depictions of the appearance of proposed facilities, as reflected in the 3-D design models. Simulations shall depict proposed project appearance from sensitive/scenic locations as well as more typical viewing locations. Transmission towers, roads, compressor stations, valves, and other aboveground infrastructure should be integrated esthetically with the surrounding landscape in order to minimize contrast with the natural environment.
VIS-4	4	P	Applicants shall develop adequate terrain mapping on a landscape/viewshed scale for site planning/design, visual impact analysis, visual impact mitigation planning/design, and for full assessment and mitigation of cumulative visual impacts through applied, state-of-the-art design practices using the cited software systems. The landscape/ viewshed scale mapping shall be geo-referenced and at the same Digital Elevation Model (DEM) resolution and contour interval within the margin of error suitable for engineered site design. This level of mapping shall enable proper placement of proposed developments into the digital viewshed context. Final plans shall be field verified for compliance.

PDEIS BMP NO.	WWEC IOP NO.	PHASE(S)[1]	WWEC IOP DESCRIPTION
VIS-5	5	P	The full range of visual and scenic BMPs shall be considered, and plans shall incorporate all pertinent BMPs. Visual and scenic resource monitoring and compliance strategies shall be included as a part of the project mitigation plans.
VIS-6	6	P	Compliance with VRM/SMS objectives shall be determined through the use of the BLM Contrast Rating procedures defined in BLM Handbook H-8431-1 Visual Contrast Rating, or the USFS SMS Handbook 701. Mitigation of visual impacts shall abide by the requirements of these handbooks.
VIS-7	1	C	A pre-construction meeting with BLM/USFS landscape architects or other designated visual/scenic resource specialist shall be held before construction begins to coordinate on the VRM/SMS mitigation strategy and confirm the compliance-checking schedule and procedures. Applicants shall integrate interim/final reclamation VRM/SMS mitigation elements early in the construction, which may include treatments such as thinning and feathering vegetation along project edges, enhanced contour grading, salvaging landscape materials from within construction areas, special revegetation requirements, etc. Applicants shall coordinate with BLM/USFS in advance to have BLM/USFS landscape architects or other designated visual/scenic resource specialists onsite during construction to work with implementing BMPs.
VIS-8	1	O	Terms and conditions for VRM/SMS mitigation compliance shall be maintained and monitored for compliance with visual objectives, with adaptive management adjustments and modifications as necessary and approved by the BLM/USFS landscape architect or other designated visual/scenic resource specialist.

[1] Phase definitions: P-Planning, C-Construction, O-Operation, D-Decommission

V3.2 Applicant Committed Design Features

TransWest has committed to implementing design features as part of the TWE Project to reduce impacts to visual resources. Table V4 outlines the Applicant committed EMMs or design features proposed by TransWest. TransWest will continue to review EMMs in connection with the environmental and engineering studies for the alternatives and prepare updated tables identifying generic and selective BMPs for the Project. Note that the Construction, Operation, and Maintenance (COM) Plan will be a part of the NTP POD.

TABLE V4 APPLICANT COMMITTED DESIGN FEATURES

DEIS NO.	PHASE(S)[1]	DESIGN FEATURE DESCRIPTION
TWE-12	P, C, O	Except for repairs necessary to make roads passable, no widening or upgrading of existing access roads will be undertaken in the area of construction and operation, where soils or vegetation are sensitive to disturbance. In designated areas, structures will be placed to avoid sensitive features such as, but not limited to, riparian areas, water courses and cultural sites, or to allow conductors to clearly span the features within limits of standard structure design. This will minimize the amount of disturbance to the sensitive feature or reduce visual contrast.
TWE-14	P, C	The Construction, Operation and Maintenance (COM) Plan will show the location of borrow sites, from which material will be obtained. Borrow pits will be stripped of topsoil to a depth of approximately six inches. Stripped topsoil will be stockpiled and, upon completion of borrow excavation, spread to a uniform depth of six inches over areas of borrow pits from which removed. Before replacing topsoil, excavated surfaces will be reasonably smooth and uniformly sloped. The sides of borrow pits will be brought to stable slopes with slope intersection shaped to carry the natural contour of adjacent undisturbed terrain into the pit to give a natural appearance. When necessary, borrow pits will be drained by open ditches to prevent accumulation of standing water.
TWE-44	P, C, O	Non-specular conductors will be used to reduce potential visual impacts.
TWE-46	P, C, O	The Applicant will comply with federal permitting agency stipulations regarding visual resources.

[1] Phase definitions: P-Planning, C-Construction, O-Operation, D-Decommission

V3.3 BLM Stipulations Applicable to Transmission Lines

The BLM has identified stipulations within their management areas as detailed in the respective RMPs, and are shown in Table V5 below. No Surface Use (NSU) and Controlled Surface Use (CSU) visual resources stipulations are identified for each BLM field office. These stipulations typically apply to activities within VRM Class I and Class II designations.

TABLE V5 BLM FIELD OFFICE USE RESTRICTIONS RELATED TO VISUAL RESOURCES

AREA OF RESTRICTION	DESCRIPTION	CONSTRAINT TYPE	BUFFER/AVOIDANCE AREA
	Rawlins Field Office		
VRM Class I and II areas	Surface disturbance will be prohibited within important scenic areas (Class I and II Visual Resource Management Areas).	NSU	No buffer
Upper Platte SRMA	Surface disturbing activities on public lands within one-quarter mile on either side of the river will be intensively managed to maintain the quality of the visual resource off-highway vehicle (OHV) use is limited to designated roads or vehicle routes. Open to oil and gas leasing with an NSO stipulation. Existing oil and gas leases will be intensively managed. Surface disturbing and disruptive activities will be restricted to maintain the quality of the visual resource.	CSU	0.25 mile
	Rock Springs Field Office		
VRM Class I and II areas within Rock Springs FO	Surface disturbance will be prohibited within important scenic areas (Class I and II Visual Resource Management Areas).	NSU	No buffer
	Grand Junction Field Office		
VRM Class I and II within Grand Junction FO	Class I and II visual resource management areas (Juanita Arch, The Goblins, Ruby Canyon, Dolores River corridor, Gunnison River corridor, Mount Garfield cliffs, Bang's Canyon cliffs, Sinbad Valley cliffs, Granite Creek cliffs, Unaweep Canyon cliffs, Hunter/Garvey Canyons cliffs, Vega Reservoir viewshed) and black ridge corridor are NSO and unsuitable for utilities.	NSU	No buffer
VRM Class III areas with outstanding scenic and landscape values within Grand Junction FO	Special design and reclamation measures may be required to protect the outstanding scenic and natural landscape values of located specific areas.	CSU	No Buffer
	White River Field Office		
VRM Class II and III areas within White River FO	Measures may be required to protect scenic and natural landscape values. These design and measures may include transplanting trees and shrubs, mulching and fertilizing disturbed areas, use of low profile permanent facilities, and painting to minimize visual contrasts. Surface disturbing activities may be moved up to 200 meters to avoid sensitive areas or to reduce the visual effects of the proposal. These measures would be applied to the following VRM Class II and III areas: Canyon Pintado National Historic District; Highways 13, 40, 64, and 139 corridors; Viewsheds in the Blue Mountain/Moosehead GRA; White River Corridor; Douglas and Baxter Pass divide; Cathedral Bluffs; and VRM Class II areas around Meeker. These measures may also be applied to other areas on a case by case basis.	CSU	No buffer
	Moab Field Office		
VRM Class II areas within Moab FO	Within VRM II areas (rims of Canyon Rims SRMA, Wilson Arch, the Kane Creek Corridor, and the Gemini Bridges area), surface-disturbing activities must meet the objectives of VRM II class objectives. The level of	CSU	No buffer

AREA OF RESTRICTION	DESCRIPTION	CONSTRAINT TYPE	BUFFER/AVOIDANCE AREA
	change to the landscape should be low; management activities may be seen, but should not attract attention of the casual observer. Any change to the landscape must repeat the basic elements of form, line, color, and texture found in the predominant natural features of the characteristic landscape. Surface-disturbing activities that are determined to be compatible and consistent with the protection or enhancement of the resource values are exempted. Recognized utility corridors are exempted only for utility projects which would be managed according to VRM III objectives.		
	Price Field Office		
VRM Class II areas within Price FO	Within VRM II areas, surface disturbing activities would comply with BLM Manual Handbook 8431-1 to retain the existing character of the landscape. Recognized utility corridors are exempt. Temporary exceedance may be allowed during initial development phases.	CSU	No buffer
	Richfield Field Office		
Existing ROWs	To avoid potential conflicts with the construction, operation, maintenance, and termination of facilities and improvements located on existing ROWs on public land, apply the following: Where a ROW grant specifically identifies an area and/or width, the VRM class within the specified area/width would be VRM Class IV. Where no width is specified, the VRM class within the interior boundaries of the area disturbed when the facility or improvement was initially constructed would be VRM Class IV.	CSU	No buffer
All VRM classes	All ROWs must comply with the applicable VRM classification objectives.	CSU	No buffer
	Salt Lake Field Office		
Ridge tops, narrow drainages	ROWs, whether within or outside a corridor, will avoid lands where an above-ground ROW would be an obvious visual or physical intrusion such as ridge tops or narrow drainages.	CSU	No buffer
VRM Class II and III areas within Salt Lake FO	ROWs, whether within or outside a corridor, will avoid lands within VRM Class II and III areas.	CSU	No buffer
	Fillmore Field Office		
Interstate Highway 15 ROW corridor	All ROWs must comply with the applicable Visual Resource Management Class guidelines. New rights of way shall be limited to below the surface of the ground uses only.	CSU	No buffer
Highway 50, 6, and 257 ROW corridor	All land disturbed by new ROW except authorized new access roads shall be rehabilitated to as close to natural conditions as possible, All ROWs must comply with the applicable Visual Resource Management Class guidelines. Roads that are needed for construction of a new ROW shall be temporary and fully rehabilitated. The road or highway within the ROW corridor shall be used to the maximum extent possible for construction and maintenance of new ROWs.	CSU	No buffer
VRM II areas	VRM Class II areas [within the Warm Springs Resource Area] are ROW avoidance areas.		
	Saint George Field Office		
VRM Class I and II areas	VRM Class I and II areas are ROW avoidance areas (subject to designated corridors). New ROWs will be granted in these areas only when feasible alternative routes or designated corridors are not available.	CSU	No buffer

V3.3.1 Additional BLM Stipulations Identified During NEPA Process

This section will detail any additional Conditions of Approval (COA) identified by the BLM for each field office.

V3.4 USFS Standards and Guidelines

USFS Standards and Guidelines are typically associated with the Management Areas for each of the forests. Each Management Area identifies the VQO or SIO for each of the Management Areas. See Section 2.3 for USFS SIOs and VQOs crossed by the TWE Project. Table V6 below summarizes specific standards, guidelines, and use restriction related to visual resources.

TABLE V6 NATIONAL FOREST VISUAL RESOURCE STANDARDS, GUIDELINES AND USE RESTRICTIONS

MANAGEMENT AREA/AREA OF RESTRICTION	RESOURCE	DESCRIPTION	
	Manti-La Sal National Forest		
General Direction	Special-Use Management (Non- Recreation) (J01) (III-37)	2) Encourage burying utility and lines, except when: A. Visual quality objectives of the area can be met using an overhead line. B. Burial is not feasible due to soil erosion or geologic hazard or unfavorable geologic conditions. C. Greater long-term site disturbance would result. D. It is not technically feasible, or economically reasonable.	
AREA OF RESTRICTION	DESCRIPTION	CONSTRAINT TYPE	BUFFER/AVOIDANCE AREA
	Uinta National Forest		
8.2 Utility Corridor/Communication Sites	Features in these areas may include various non-recreation special uses such as utility corridors or communication sites allocated for long-term site investment. Vegetation management should be limited to activities consistent with installation and maintenance of the utility line or communication site and mitigation against potential erosion and visual quality impacts. Recreation use is limited to incidental dispersed use, such as a trail crossing through the area. Public access restrictions may be imposed within energy transmission, utility, and communication corridors and sites for health, safety, or resource considerations, or to be compatible with management direction for surrounding areas. CSU for all leasing. See other management areas for surrounding area stipulations.	CSU	No buffer

V3.4.1 Additional USFS Stipulations Identified During NEPA Process

This section will detail any additional COAs identified by the USFS for each forest.

V3.5 DEIS Identified Mitigation Measures

Selective mitigation measures address specific environmental impacts or localized conditions and are prescribed on a case by case basis. Selective mitigation measures being developed through the NEPA process are or will be included in the DEIS, FEIS, and ROD. Mitigation measures currently identified in the DEIS, and implementation strategies, are detailed in the following section. For purposes of review and discussion with agencies specific to visual resources, the mitigation measures described in the DEIS are detailed below. Once the measures are finalized, they will be incorporated into this Plan. Table V7 of this Plan will tabulate the final route segments by milepost and indicate the location of sensitive resources (VRM Classes, SIO Classes, road crossing, etc.) and application locations of selective mitigation measures where they can be identified relative to the Project centerline. Selective mitigation measures identified in this Plan will also be shown on detailed map sheets. The maps will show the selected Agency Preferred Alternative alignment on which detailed final design will be based.

The following section discusses mitigation measures identified in the DEIS. These mitigation measures have not been finalized at this time and may be updated, changed, or eliminated in future revisions of this Plan.

VR-1: Remove pinyon-juniper trees only as necessary for construction and maintenance of transmission towers and access roads. Feather the edges of any clearings. Pinyon-juniper trees in the right-of-way (ROW) that are outside of the tower and road construction zone are left in place. Leave other trees in the ROW that would not present a safety or engineering hazard or otherwise interfere with operations. Where feasible, top rather than remove trees that exceed the allowable height. Openings in vegetation for facilities, structures, and roads should mimic, to the extent possible, the size, shape, and characteristics of naturally occurring openings. Effectiveness: This mitigation would substantially reduce impacts in immediate foreground, foreground-middleground, and background viewing situations.

VR-2: Use BLM environmental colors (Standard Environmental Colors, Color Chart CC-001, 2008) for surface coatings of permanent buildings, fences, gates, and tanks at terminal sites. Color selection is based on site-specific assessment at each site. Paint grouped structures the same color to reduce visual complexity and color contrast. Effectiveness: This mitigation would substantially reduce impacts of the terminal sites.

VR-3: Locate structures, roads, and other project elements as far back from road, trail, and river crossings (linear KOPs) as possible, and, where feasible, employ terrain and vegetation to screen views from crossings. Effectiveness: This mitigation would substantially reduce visual contrasts by decreasing the apparent size and extent of structures.

VR-4: In areas with no existing transmission lines move the transmission line (reference line) away from the immediate foreground of stationary (non-linear) KOPs to a distance of 0.5 mile or more. Where feasible, approach and cross linear KOPs such as roads and trails at right angles. Effectiveness: This mitigation would reduce visual contrasts from strong to moderate and moderate to weak.

VR-5: Materials and surface treatments of structures and land disturbances should repeat and/or blend with the existing form, line, color, and texture of the landscape and have little or no reflectivity (non-specular). Effectiveness: This mitigation would substantially reduce visual contrasts.

VR-6: Where paralleling an existing transmission line, where possible, place the structures to match the locations of structures in the existing line. Effectiveness: This mitigation would reduce line and form structure contrasts by blending structures with existing structures.

VR-7: Where possible, position roads at the toe of a slope, at the edge of vegetation openings, and perpendicular with the line of sight. Effectiveness: This mitigation would substantially reduce visual contrasts by blending roads and associated grading into the landscape.

VR-8: Minimize lighting at terminal and construction facilities to the extent permitted by the Occupational Safety and Health Administration (OSHA) and down-shield lights to reduce night glare and light pollution. Effectiveness: This mitigation would substantially reduce night-time visual contrasts by diminishing the effects of lighting on the night landscape.

VR-9: Where possible in tree-covered moderate to steep terrain, perform construction operations for towers and conductors with helicopters to reduce the need for access roads and laydown clearings. Effectiveness: This mitigation would substantially reduce visual contrasts by eliminating the need for terrain modification, grading and drainage disturbances and tree removal.

V4.0 MONITORING AND COMPLIANCE

Prior to beginning construction, TransWest will assemble an environmental compliance and inspection team to oversee all aspects of construction of the Project. The team will ensure full compliance with BMPs, stipulations, standards and mitigation measures contained in the NTP POD. Supplemental field support for visual resources will be available as needed to provide monitoring and compliance support where necessary. These visual resource analysts will be available to assist in the application and interpretation of visual mitigation measures. Visual support staff would also be available to consult with BLM, USFS or other agency staff or stakeholders.

V5.0 REFERENCES

Bureau of Land Management (BLM). 1986a. Manual H-8410-1 - Visual Resource Inventory. Bureau of Land Management, Washington, D.C.

_____. 1986b. Manual H-8431. Visual Resource Contrast Rating. Bureau of Land Management, Washington, D.C.

_____. 2001. Federal Land Policy and Management Act of 1976 (90 Stat. 2743; 43 United States Code §1601, *et seq*.).

National Park Service (NPS). 2008. National Trail System Act of 1968 (16 United States Code §1241-51).

United States Forest Service (USFS). 1995. Agriculture Handbook Number 701 - Landscape Aesthetics, a Handbook for Scenery Management.

APPENDIX W
FRAMEWORK WATER RESOURCES PROTECTION PLAN

TABLE OF CONTENTS

W1.0 INTRODUCTION 1

W1.1 PLAN PURPOSE 1
W1.2 PLAN UPDATES 1

W2.0 REGULATORY OVERVIEW 1

W2.1 FEDERAL REGULATIONS 1
W2.1.1 Clean Water Act – Section 303(d) List of Impaired Waters 1
W2.1.2 Clean Water Act – Section 130.7 Total Maximum Daily Load 2
W2.1.3 Clean Water Act - Section 401 Water Quality Certification 2
W2.1.4 Clean Water Act – Section 402 National Pollutant Discharge Elimination System Permits 2
W2.1.5 Clean Water Act – Section 404 Waters of the U.S. Permits 2
W2.1.6 Rivers and Harbors Appropriation Act of 1899, Section 10 3
W2.1.7 Executive Order 11990 Protection of Wetlands 3
W2.1.8 Executive Order 11988 Floodplain Management 4
W2.1.9 Wild and Scenic Rivers 4
W2.2 STATE REGULATIONS 4
W2.2.1 Wyoming 4
W2.2.2 Colorado 5
W2.2.3 Utah 5
W2.2.4 Nevada 6

W3.0 OVERVIEW OF WATER RESOURCES 6

W3.1 JURISDICTIONAL WATERS OF THE U.S. 6
W3.1.1 Wetlands 6
W3.1.2 Non-wetland Waters of the U.S. 6
W3.2 NON-JURISDICTIONAL WATER RESOURCES 6

W4.0 AVOIDANCE AND ENVIRONMENTAL MITIGATION MEASURES 7

W4.1 ENVIRONMENTAL MITIGATION MEASURES 7
W4.2 WATER BODY CROSSINGS 8
W4.3 WETLAND CROSSINGS 11

W5.0 REFERENCES 12

FIGURES:

FIGURE W1 TYPICAL ROAD DESIGNS FOR LOW WATER AND CULVERT CROSSINGS 10

TABLES:

TABLE W1 OTHER FRAMEWORK PLANS CONTRIBUTING TO THE PROTECTION OF WATERS OF THE U.S. 7

ACRONYMS

Applicant	TransWest Express LLC, also TransWest
ATV	all-terrain vehicle
BLM	Bureau of Land Management
BMP	Best Management Practice
CDPHE	Colorado Department of Public Health and Environment
CFR	Code of Federal Regulations
CWA	Clean Water Act
DEIS	Draft Environmental Impact Statement
DEQs	Departments of Environmental Quality
EPA	United States Environmental Protection Agency
FEIS	Final Environmental Impact Statement
NDEP	Nevada Division of Environmental Protection
NEPA	National Environmental Policy Act
NOI	Notice of Intent
NPDES	National Pollutant Discharge Elimination System
NTP	Notice to Proceed
NWP	Nationwide Permit
OHWM	ordinary high water mark
Plan	Water Resources Protection Plan
POD	Plan of Development
Project	TransWest Express Transmission Project, also TWE Project
ROD	Record of Decision
SWPPP	Stormwater Pollution Prevention Plan
TMDL	Total Maximum Daily Load
TransWest	TransWest Express LLC, also Applicant
TWE Project	TransWest Express Transmission Project, also Project
U.S.C.	United States Code
UDEQ	Utah Department of Environmental Quality
UDNR	Utah Department of Natural Resources
USACE	Unites States Corps of Engineers
USFWS	Unites States Fish and Wildlife Service
WDEQ	Wyoming Department of Environmental Quality
WQC	Water Quality Certification

W1.0 INTRODUCTION

This framework Water Resources Protection Plan (Plan) describes TransWest Express LLC's (TransWest or Applicant) approach for avoiding and minimizing impacts to water resources from the proposed TransWest Express Transmission Project (TWE Project or Project). The permit requirements of the U.S. Army Corps of Engineers (USACE) are described in this Plan; however, these requirements will be addressed separately in coordination with the USACE permitting process.

W1.1 Plan Purpose

This framework Plan represents the commitment on the part of TransWest to protect water resources. The overall objective is to provide measures to protect these resources from potential impacts during construction, operation, and maintenance. This plan incorporates mitigation measures contained in the Draft Environmental Impact Statement (DEIS) for the Project. This plan is intended for use as a guide to determine the appropriate site-specific measures to be implemented during construction activities. The goals of this plan are to control Project-related erosion and sedimentation into streams and wetlands and minimize disturbance and erosion of streambeds and banks. This document provides a template for the final Water Resources Protection Plan to be developed by the Construction Contractor(s).

W1.2 Plan Updates

Based on detailed preliminary engineering and design for the selected Agency Preferred Alternative, an updated Plan will be completed with the Record of Decision (ROD) Plan of Development (POD). This Plan will provide initial measures for the protection of water resources identified in the Agency Preferred Alternative in the Final Environmental Impact Statement (FEIS). For the Notice to Proceed (NTP) POD, the Plan will be updated based on final detailed engineering and design and the results of field surveys. The Construction Contractor(s) will be responsible for implementing the final Water Resources Protection Plan.

W2.0 REGULATORY OVERVIEW

Construction, operation, and maintenance of the Project would include ground disturbing activities that could impact wetlands and waters of the U.S. and aquatic resources. The following regulations and associated permits and authorizations may be required for the Project.

W2.1 Federal Regulations

The Clean Water Act (CWA) (33 United States Code [U.S.C.] §1251 et seq., formerly the Federal Water Pollution Control Act of 1972) was enacted with the intent of restoring and maintaining the chemical, physical and biological integrity of the waters of the U.S. Specific sections of the CWA that may apply to the Project are described below, followed by a brief description of the associated permits.

W2.1.1 Clean Water Act – Section 303(d) List of Impaired Waters

Section 303(d) of the federal CWA requires states to assess the condition of state waters to determine where water quality is impaired (does not fully support uses identified in the stream classification or does not meet all water quality standards) or threatened (is likely to become impaired in the near future). The result of this review is the compilation of a 303(d) list, which states must submit to the U.S. Environmental Protection Agency (EPA) biannually.

W2.1.2 Clean Water Act – Section 130.7 Total Maximum Daily Load

Section 130.7 of the CWA required states to establish Total Maximum Daily Load (TMDL) programs, which are approved by the EPA for streams and lakes that do not meet adopted water quality standards. A TMDL includes a quantitative assessment of water quality problems, contributing sources, and load reductions or control actions needed to restore and protect water bodies. A TMDL budget takes into account loads from point, nonpoint, and natural background sources. National Pollutant Discharge Elimination System (NPDES) permits address point-source pollution to surface waters. Non-point source pollution is addressed by the application of Best Management Practices (BMPs) and environmental mitigation measures.

In compliance with the federal CWA, the Wyoming Department of Environmental Quality (WDEQ), Colorado Department of Public Health and Environment (CDPHE), Utah Department of Environmental Quality (UDEQ), and Nevada Division of Environmental Protection (NDEP) have identified Section 303(d) water quality limited streams and lakes for development of TMDL criteria. TMDLs have been established for surface waters in Colorado, Utah, and Nevada. WDEQ has developed few TMDLs at this time since they are just implementing the TMDL program. From the time a water body is listed as impaired, a TMDL for that water body would be developed within one to five years. A list of impaired water bodies on the 303(d) list will be identified for the selected Agency Preferred Alternative.

W2.1.3 Clean Water Act - Section 401 Water Quality Certification

Pursuant to Section 401 of the federal CWA, any permit or license issued by a federal agency for an activity that may result in a discharge into waters of the U.S. requires certification from the state in which the discharge originates. This requirement allows each state to have input into federally approved projects that may affect its waters (rivers, streams, lakes, and wetlands) and to ensure the projects will comply with state water quality standards and any other water quality requirements of state law. State certification ensures that the project will not adversely impact impaired waters (waters that do not meet water quality standards) and that the project complies with applicable water quality improvement plans (total maximum daily loads). The States must grant, deny, or waive water quality certification for a project before a federal permit or license can be issued. The Departments of Environmental Quality (DEQs) for Wyoming, Colorado, Utah, and Nevada must provide Section 401 Water Quality Certifications (WQCs) for the federally issued permits, including the 404 permits in all four states.

W2.1.4 Clean Water Act – Section 402 National Pollutant Discharge Elimination System Permits

To comply with criteria in EPA's CWA, all construction site operators engaged in clearing, grading, and excavating activities that disturb one acre or more, must obtain an NPDES permit for stormwater discharges (Code of Federal Regulations [CFR], Title 40, Parts 122 and 123). NPDES permits (also called Construction General Permits) are issued by the EPA or similar authorized state entity following submittal of a Notice of Intent (NOI) for construction activities, and preparation of a Stormwater Pollution Prevention Plan (SWPPP) that describes how erosion and sediment transport will be minimized to adjacent water bodies.

W2.1.5 Clean Water Act – Section 404 Waters of the U.S. Permits

Waters of the U.S., including wetlands, are subject to the USACE jurisdiction under Section 404 of the CWA. A Section 404 permit is required for the discharge of dredged or fill material into waters of the U.S. Section 404 of the CWA applies to all jurisdictional waters of the U.S., including wetlands

that have significant nexus to interstate commerce. The USACE jurisdiction over non-tidal waters of the U.S. extends to the "ordinary high water mark provided the jurisdiction is not extended by the presence of wetlands" (33 CFR Part 328.4); and under Title 40 CFR Part 230.3 (s)(1). Jurisdictional waters include surface waters, such as navigable waters and their tributaries, all interstate waters and their tributaries, natural lakes, all wetlands adjacent to other jurisdictional waters and all impoundments of these waters.

The majority of the Project lies within the Sacramento District of the USACE. The Nevada portion of the Project lies within the Los Angeles District of the USACE and a small portion of the Project near Rawlins, Wyoming is within the Omaha District of the USACE. The Districts within which unavoidable wetland impacts would occur would provide regulatory review and permitting services for the Project.

Under Section 404, the USACE issues a number of Nationwide Permits for different types of activities that result in minimal individual and cumulative adverse effects on the aquatic environment and Individual Permits for larger and more complex impacts.

W2.1.6 Rivers and Harbors Appropriation Act of 1899, Section 10

Under Section 10 of the Rivers and Harbors Appropriation Act of 1899 (33 U.S.C.§403; Chapter 425, March 3, 1899; 30 Stat. 1151), the building of any wharfs, piers, jetties and other structures is prohibited without Congressional approval, and excavation or fill within navigable waters requires the approval of the Chief of Engineers. Authority of the USACE to issue permits for the discharge of refuse matter into or affecting navigable waters under Section 13 of the 1899 Act (33 U.S.C. §401; 30 Stat. 1152) was modified by title IV of P.L. (33 U.S.C. §§1341-1345; 86 Stat. 877), as amended, which established the NPDES permits.

USACE permits are required under Section 10 for construction in, over or under navigable waters of the United States except as otherwise noted by USACE. Certain activities specified in 33 CFR Part 330 are permitted by that regulation ("nationwide general permits"). Other activities may be authorized by district or division engineers on a regional basis ("regional general permits"). If an activity is not exempted by USACE or authorized by a general permit, an individual Section 10 permit will be required for the proposed activity.

The Fish and Wildlife Coordination Act (16 U.S.C. §§661-667e; 48 Stat. 401), as amended, provides authority for the U.S. Fish and Wildlife Service (USFWS) to review and comment on the effects on fish and wildlife of activities proposed to be undertaken or permitted by the USACE.

W2.1.7 Executive Order 11990 Protection of Wetlands

The requirements for all regulatory actions specified in Executive Order 11988 are summarized in Section 1 from the order: *"(a) Each agency shall provide leadership and shall take action to minimize the destruction, loss or degradation of wetlands, and to preserve and enhance the natural and beneficial values of wetlands in carrying out the agency's responsibilities for (1) acquiring, managing, and disposing of Federal lands and facilities; and (2) providing Federally undertaken, financed, or assisted construction and improvements; and (3) conducting Federal activities and programs affecting land use, including but not limited to water and related land resources planning, regulating, and licensing activities. (b) This Order does not apply to the issuance by Federal agencies of permits, licenses, or allocations to private parties for activities involving wetlands on non-Federal property."*

W2.1.8 Executive Order 11988 Floodplain Management

The requirements for all regulatory actions specified in Executive Order 11988 are summarized in Section 1 from the order: "*Each agency shall provide leadership and shall take action to reduce the risk of flood loss, to minimize the impact of floods on human safety, health and welfare, and to restore and preserve the natural and beneficial values served by floodplains in carrying out its responsibilities for (1) acquiring, managing, and disposing of Federal lands, and facilities; (2) providing Federally undertaken, financed, or assisted construction and improvements; and (3) conducting Federal activities and programs affecting land use, including but not limited to water and related land resources planning, regulating, and licensing activities.*"

W2.1.9 Wild and Scenic Rivers

Wild and Scenic Rivers were established by the Wild and Scenic Rivers Act of 1968 to protect and preserve designated rivers throughout the nation in their free-flowing condition and to protect and preserve their immediate environments. To meet the eligibility criteria, a waterway must be "free-flowing" and, along with its adjacent land area, must possess at least one "outstandingly remarkable value." The Act provides three levels of protection: wild, scenic, and recreational. "Wild" rivers are free of dams, generally inaccessible except by trail, and represent vestiges of primitive America. "Scenic" rivers are free of dams, with shorelines or watersheds still largely primitive and shorelines largely undeveloped, but accessible in places by roads. "Recreational" rivers are readily accessible by road or railroad, may have some development along their shorelines, and may have been dammed in the past.

The Wild and Scenic Rivers Act describes procedures and limitations for control of lands in federally administered components of the system and for dealing with disposition of lands and minerals under Federal ownership.

W2.2 State Regulations

Many States regulate waterways and adjacent wetlands, either through specific regulatory programs or via Section 401 of the CWA, also known as 401 WQC. State regulatory programs may incorporate permitting procedures to authorize jurisdictional impacts to waterways and wetlands and may require compensatory mitigation for unavoidable impacts. In the absence of a specific regulatory program, States may utilize 401 WQC to require measures over and above those required by the USACE Section 404 permit. Section 401 allows a state to review, authorize or deny, and implement requirements additional to those of the USACE 404 permit. If a state chooses to utilize its authority under Section 401, the Section 404 permit does not go into effect until the State issues the 401WQC.

The state agencies, authorizations and guidance that are applicable to wetlands and waters of the U.S. permitting and mitigation requirements for the TWE Project are summarized below.

W2.2.1 Wyoming

WDEQ, Water Quality Division:

- CWA Section 401 WQC.
- Request for WQC submitted to WDEQ by USACE for Section 404 permits.
- Section 401 certification issued by WDEQ prior to federal Section 404 approval.

- In 2012, the WDEQ certified, with certain conditions, the use of Nationwide Permit (NWP) 12 on all waters in Wyoming other than those designated as Class 1 waters.

W2.2.2 Colorado

CDPHE, Water Quality Control Division:

- CWA Section 401 WQC.
- Under the Colorado 401 Certification Regulation, all Nationwide CWA Section 404 permits are certified by statute and do not require a certification by the Water Quality Control Division.
- All WQCs for Individual CWA Section 404 permits and licenses are subject to specified state requirements. The TWE Project would comply with these additional requirements.
- For Individual CWA Section 404 permits, documents must be submitted to the Water Quality Control Division for CWA Section 401 certification.
- In 2012, the CDPHE Water Quality Control Division certified, with conditions, the use of NWP 12 in the State of Colorado.

W2.2.3 Utah

Utah Department of Natural Resources (UDNR), Division of Water Rights:

- Stream Channel Alteration Permit for alteration of bed or banks of a natural stream.
- State Engineer's Office has entered into a joint permitting program with the USACE to issue Section 404 approvals through the State Stream Alteration Program.
- Draft Mitigation Guidance.
- Utah Division of Water Rights, Stream Program Fact Sheet SA-5, Draft, Post-Construction Establishment of Vegetation.

UDEQ, Division of Water Quality:

- CWA Section 401 WQC.
- Request for certification submitted to UDEQ by USACE for Section 404 permits.
- Section 401 certification issued by UDEQ prior to federal Section 404 approval.
- In 2012, the UDEQ Division of Water Quality certified, with conditions, the use of NWP 12 in the State of Utah.

U.S. EPA:

- Section 404 permits on tribal lands will also require a Section 401 WQC from the EPA's regional office.

W2.2.4 Nevada

NDEP, Bureau of Water Pollution Control:

- CWA Section 401 WQC.
- Request for certification submitted to NDEP by USACE for Section 404 permits.
- Section 401 certification issued by NDEP prior to federal Section 404 approval.
- In 2012, the NDEP certified, with conditions, the use of NWP 12 in the State of Nevada.

U.S. EPA:

- Section 404 permits on tribal lands will also require a Section 401 WQC from the EPA's regional office.

W3.0 OVERVIEW OF WATER RESOURCES

W3.1 Jurisdictional Waters of the U.S.

Waters of the U.S. are defined in 40 CFR 230.3(s). Waters of the U.S. for the TWE Project would be determined by field surveys.

W3.1.1 Wetlands

Wetlands are defined for regulatory purposes as "those areas that are inundated or saturated by surface or groundwater at a frequency and duration sufficient to support, and that under normal circumstances do support, a prevalence of vegetation typically adapted for life in saturated soil conditions" (33 CFR Part 328.3, 40 CFR Part 230.3). Wetlands are important ecological resources that perform many functions including groundwater recharge, flood flow attenuation and conveyance, erosion control, and water quality improvement. They also provide habitat for many plants and animals, including threatened or endangered species.

W3.1.2 Non-wetland Waters of the U.S.

The USACE regulates the discharge of fill material within the plane of the ordinary high water mark (OHWM) of streams, and also regulates the overhead crossing of navigable waterways. The OHWM is defined as the line on the shore established by the fluctuations of water and indicated by physical characteristics, or by other appropriate means that consider the characteristics of the surrounding areas (33 CFR Part 328.3(e)). These physical characteristics include a clear, natural line impressed on the bank, shelving, changes in the character of the soil, destruction of terrestrial vegetation, the presence of litter and debris, or other appropriate means that consider the characteristics of the surrounding area.

W3.2 Non-Jurisdictional Water Resources

Non-jurisdictional water resources may include intermittent, ephemeral streams and drainages, irrigation ditches and canals, wells, isolated wetlands and others.

W4.0 AVOIDANCE AND ENVIRONMENTAL MITIGATION MEASURES

In addition to adhering to USACE and state regulations and guidelines regarding waters of the U.S., the TWE Project will avoid and minimize adverse impacts to other water resources to the extent practicable. This section describes the environmental mitigation measures that TransWest and its Construction Contractor(s) will implement and the access road designs used by TransWest to minimize impacts to water resources.

W4.1 Environmental Mitigation Measures

TransWest has prepared other framework plans included in the FEIS POD for consideration during the National Environmental Policy Act (NEPA) analysis. Many of these plans provide protection to water resources either directly or indirectly and are listed in Table W1 below.

TABLE W1 OTHER FRAMEWORK PLANS CONTRIBUTING TO THE PROTECTION OF WATERS OF THE U.S.

FRAMEWORK PLAN	WATER PROTECTION MEASURES	FEIS POD APPENDIX
Access Road Siting and Management Plan	This plan will outline methods to prevent adverse impacts to the environment that could result from access road siting and management.	A
Blasting Plan	This plan will outline methods to prevent adverse impacts to the environment that could potentially result from the use of explosives and blasting procedures during Project construction.	C
Emergency Preparedness and Response Plan	Measures identified in this plan will be in compliance with applicable state and federal laws and policies while allowing access to the Project in a timely, cost effective and safe manner.	F
Environmental Compliance and Monitoring Plan	This is the centralized Project environmental compliance reference and is intended to facilitate environmental compliance across the entire Project.	G
Hazardous Materials Management Plan	This plan will reduce the risks associated with the use, storage, transportation, production and disposal of hazardous materials.	L
Noxious Weed Management Plan	This plan will ensure noxious weeds are identified and controlled during construction of Project facilities and all federal, state, county and local requirements are satisfied.	N
Reclamation Plan	This plan will combine TransWest's project-wide BMPs with site-specific mitigation developed in consultation with agencies.	Q
ROW Preparation and Vegetation Management Plan	This plan will present the measures for vegetation management within the right-of-way for operation and maintenance activities for the Project.	R
Spill Prevention and Response Plan	This plan will include measures for spill prevention practices, requirements for refueling and equipment operation near water bodies, procedures for emergency response and incident reporting and training requirements.	S
Stormwater Pollution Prevention Plan	This plan will include measures for temporary and permanent erosion and sediment control that will be used during construction, operation and maintenance of	T

FRAMEWORK PLAN	WATER PROTECTION MEASURES	FEIS POD APPENDIX
	the Project facilities.	
Wildlife and Plant Conservation Measures Plan	This plan will present the measures for avoidance and minimization of impacts to special status wildlife species as related to construction activities for the Project.	X

In addition to the identified water resources mitigation measures in the DEIS, all applicable laws and regulations will be followed in respect to the protection of water resources.

W4.2 Water Body Crossings

The TWE Project is designed to utilize existing access roads wherever practicable in order to minimize environmental impacts associated with new road construction. Design engineering avoided new crossings of perennial streams, river and artificial water conveyances where practicable. TransWest plans to use existing water body crossings (e.g., river, stream, and drainage channel) where feasible and practicable. New roads are planned to cross water bodies only where avoidance is infeasible and largely where water bodies are ephemeral or intermittent. Preliminary water body crossings will be identified for the ROD POD. Final water body crossing and culvert standards will be determined for the NTP POD. The specific loads and the stream conditions will dictate the type of stream crossing.

Roads will be built as near as possible at right angles to the streams and washes. Culverts will be installed where necessary. All construction and maintenance activities will be conducted in a manner that will minimize disturbance to vegetation, drainage channels and intermittent or perennial stream banks. Typical road designs for low water and culvert crossings are shown in Figure W1. The following water body crossings would be used where avoidance is not practicable:

- **Drive through (Arizona crossing):** Crossing of a channel with only minimal vegetation removal and no cut or fill is needed. This is typical for much of the low precipitation sagebrush country characterized by rolling topography and streams that rarely flow with water.

- **Ford:** Crossing of a channel that includes grading and stabilization. Stream banks and approaches will be graded and stabilized with rock or other erosion control devices to allow vehicle passage. Coarse rock would be installed in the streambed in a manner such that it would not raise the level of the streambed, allowing continued movement of water, fish and debris. This typically would be used on intermittent, larger ephemeral streams, or smaller perennial streams that would be expected to remain passable during a typical runoff season (e.g., estimated average peak stream flow in the magnitude of 100 cubic-feet per second or less and considering water velocity and depth).

- **Culvert:** Crossing of a water body that includes installation of a culvert and a stable road surface established over the culvert for vehicle passage. Construction will occur during periods of low water. Culverts must be a minimum 18-inch diameter and able to pass a 10-year flow event. They typically would be partially buried in the streambed to maintain streambed material in the culvert. Non-erosive material would be placed around culverts to prevent scour or water flow outside the culvert. Stream banks and approaches also might be stabilized with rock or other erosion control devices. Culvert crossings could be used to limit impacts from in-stream erosion due to traffic within intermittent and smaller perennial

streams. Ground disturbing activities will comply with agency approved BMPs where practicable.

During final design, consultation would be conducted with the land managing agency regarding relevant standards and guidelines for water body road crossing methods. Wherever needed, culverts, low water crossings and other agency approved designs would be used to accommodate estimated peak flows of waterways (e.g., 10-year or 50-year flow event) according to the relevant land managing agency requirements. Each water body crossing would be designed and reviewed as advanced engineering is completed. Construction disturbances of banks and beds of water bodies would be minimized during this design process. Performance of low water stream crossings (i.e., drive through and ford) and culvert installations would be monitored for the life of the access road, and maintained as necessary.

For 303(d) listed streams with sediment as the primary contaminant of concern, additional erosion and sediment control methods will be used if flow is present during installation of in-stream structures and other BMPs are not effective. Additional BMPs contained in agencies' land management guidance (BLM Field Office and forest-specific) would apply to further minimize impacts, such as avoidance zones from waterways and specific requirements for access road crossing design.

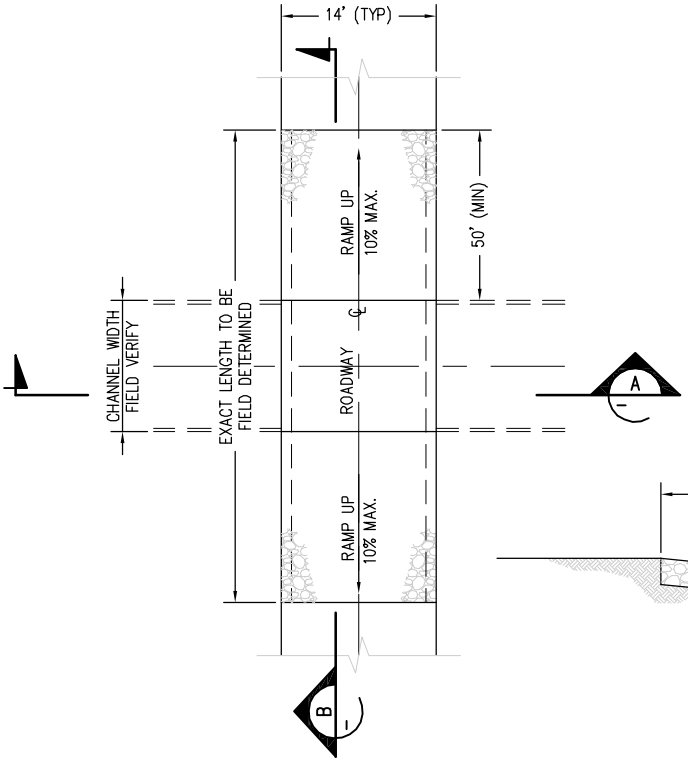

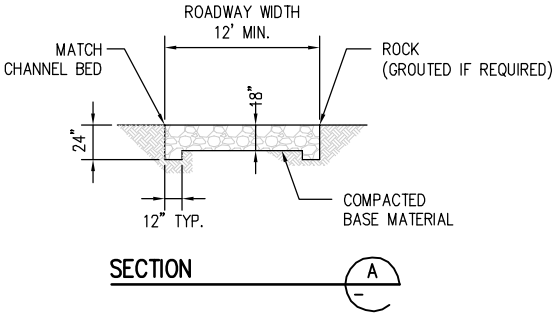

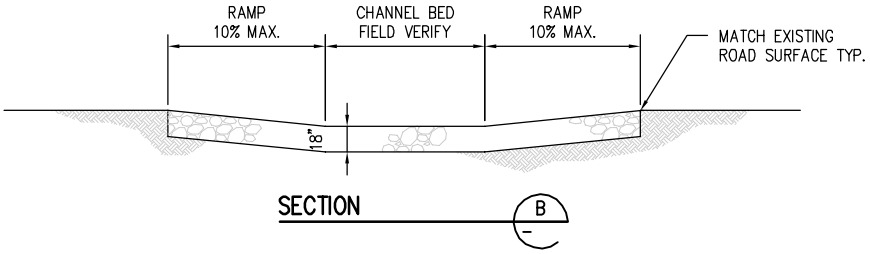

TYPICAL ROADS
CROSSING (GROUTED, IF REQUIRED)

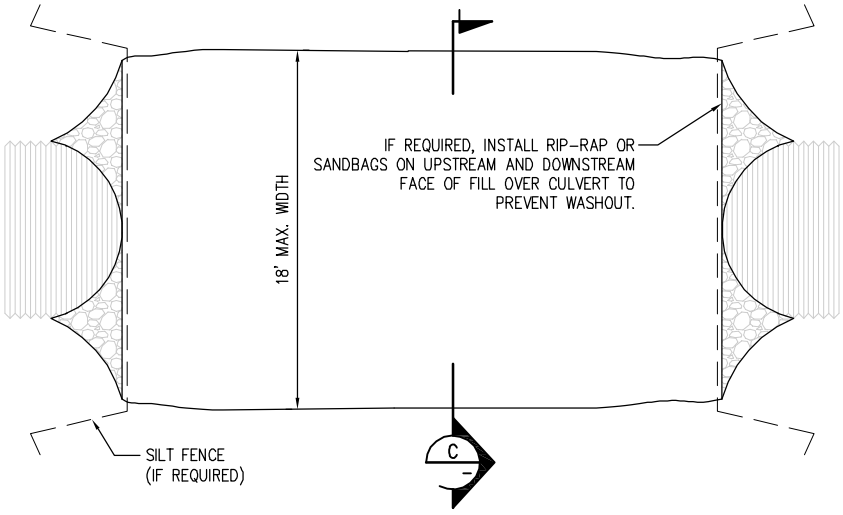

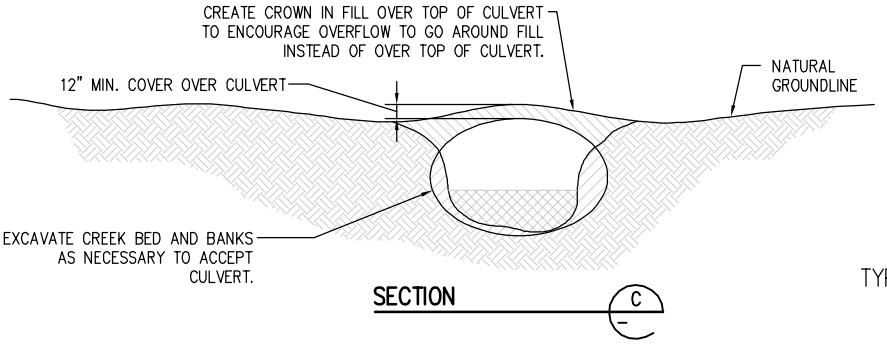

TYPICAL ROADS – CULVERT

POWER ENGINEERS
www.powereng.com

TRANSWEST EXPRESS TRANSMISSION PROJECT
FIGURE W1

TYPICAL ROAD DESIGNS FOR
LOW WATER & CULVERT CROSSINGS

W4.3 Wetland Crossings

During construction and for routine and emergency operations, access roads across wetlands to structure locations may be necessary. A combination of methods for road access across wetlands is proposed:

- Construction of permanent above grade roads that will be utilized during construction, operation and maintenance. This will typically entail placement of permanent fill in wetlands such that the travel surface would be higher in elevation than the OHWM. The construction of above grade access roads allows for the use of the types of equipment needed for construction, operation, maintenance and for expedited access for emergency restoration throughout the year.

- Construction or use of temporary roads during construction, followed by restoration of the disturbance after construction. TransWest only proposes this approach in areas where there may be extensive wetlands. Smaller wetland and riparian area crossings would be constructed using permanent crossing methods because it would not be feasible to provide for temporary crossing materials for scattered crossings along 750 miles of Project. Where temporary roads will be used, construction equipment may travel overland if the area is dry. If construction occurs when the ground is solidly frozen, ice roads could be used.

If construction must occur when the ground is wet, temporary matting materials will be installed to allow for heavy vehicles and equipment. The mats typically come in the form of heavy timbers bolted together. They are often used over a geotextile that is applied directly over the wet soil surface. When construction use is complete, the mats are removed and the geotextile taken up. This approach will be used where feasible since it further reduces vegetation damage and compaction and reduces the time for full restoration.

Where temporary road access is utilized, road areas will be rehabilitated after construction. Any geotextiles and matting used will be removed and wetland vegetation allowed to re-grow. No permanent roads will be available for routine inspections or repairs. Operational inspections and repairs will be scheduled for times when the ground is dry or frozen and access will be overland along the road alignment by all-terrain vehicle (ATV). Emergency repairs requiring heavy equipment will access the damaged area using matting if necessary. After emergency repairs are completed, matting will be removed and the wetland areas will be allowed to restore naturally.

W5.0 REFERENCES

U.S. Army Corps of Engineers (USACE). 1987. *Corps of Engineers Wetlands Delineation Manual*. Technical Report Y-87-1, US Army Corps of Engineers Waterways Experiment Station, Vicksburg, MS, 100pp. and appendices.

_____. 2008. *A Guide to the Identification of the Ordinary High Water Mark (OHWM) in the Arid West Region of the Western United States (A Delineation Manual)*, U.S. Army Corps of Engineers Research and Development Center, 77 pp.

_____. 2012. Reissuance of Nationwide Permits 77 *Federal Register* 10271-10272 February 2012 / Notices.

Utah Division of Water Rights. 2008. Post Construction Establishment of Vegetation. Stream Alteration Fact Sheet SA-5. First Edition. February 15, 2008. Available here: http://www.waterrights.utah.gov/strmalt/whitepapers/default.asp (Accessed January 8, 2014).

APPENDIX X
FRAMEWORK WILDLIFE AND PLANT CONSERVATION MEASURES PLAN

TABLE OF CONTENTS

X1.0 INTRODUCTION 1

X1.1 PLAN PURPOSE 1
X1.2 PLAN UPDATES 1
X1.3 AGENCY-SPECIFIC REQUIREMENTS 1
X1.3.1 All Lands 2
X1.3.2 Bureau of Land Management 2
X1.3.3 United States Forest Service 2
X1.3.4 Bureau of Reclamation 2
X1.3.5 States 2

X2.0 SPECIAL STATUS SPECIES PROTECTION MEASURES 3

X2.1 REGION I 3
X2.2 REGION II 8
X2.3 REGION III 13
X2.4 REGION IV 16

X3.0 WILDLIFE AND PLANT PROTECTION MEASURES 17

X3.1 PROTECTION MEASURES 17
X3.1.1 West-wide Energy Corridor Programmatic EIS Best Management Practices 17
X3.1.2 TWE Applicant Proposed Measures 18
X3.1.3 Additional Mitigation Measures 19
X3.1.4 Surveys 24
X3.1.5 Monitoring and Reporting 25

TABLES:

TABLE X1 SPECIAL STATUS SPECIES AND TEMPORAL/ SPATIAL RESTRICTIONS FOR REGION I 4
TABLE X2 SPECIAL STATUS SPECIES AND TEMPORAL/ SPATIAL RESTRICTIONS FOR REGION II 8
TABLE X3 SPECIAL STATUS SPECIES AND TEMPORAL/ SPATIAL RESTRICTIONS FOR REGION III. 13
TABLE X4 SPECIAL STATUS SPECIES AND TEMPORAL/ SPATIAL RESTRICTIONS FOR REGION IV 16
TABLE X5 ADDITIONAL MITIGATION MEASURES 19

ACRONYMS

Applicant	TransWest Express LLC, also TransWest
BA	Biological Assessment
BE	Biological Evaluation
BLM	Bureau of Land Management
BMP	Best Management Practice
BO	Biological Opinion
CO-E	Colorado Endangered Species
COM Plan	Construction, Operation, and Maintenance Plan
CO-SE	Colorado – State Endangered
CO-ST	Colorado State Threatened
CSU	Controlled Surface Use
CWA	Clean Water Act
DEIS	Draft Environmental Impact Statement
EMM	Environmental Mitigation Measure
ESA	Endangered Species Act of 1973
FC	Federal Candidate
FE	Federally Endangered
FEIS	Final Environmental Impact Statement
FLPMA	Federal Land Policy and Management Act of 1976
FT	Federally Threatened
HMA	Herd Management Area
NAGPRA	Native American Graves Protection and Repatriation Act of 1990
NDOW	Nevada Department of Wildlife
NEPA	National Environmental Policy Act of 1969
NMFS	National Marine Fisheries Service
NSU	No Surface Use
NTP	Notice to Proceed
NV-CE	Nevada Critically Endangered
NV-CY	Nevada Protected Cactus/Yucca
NV-P	Nevada - Protected
NV-PCE	Nevada Proposed Critically Endangered
PAC	Protected Activity Center
Plan	Wildlife and Plant Conservation Measures Plan
POD	Plan of Development
Project	TransWest Express Transmission Project, also TWE Project
Reclamation	Bureau of Reclamation
ROD	Record of Decision
ROW	right-of-way
SUA	Special Use Authorization
TransWest	TransWest Express LLC, also Applicant
TWE Project	TransWest Express Transmission Project, also Project
U.S.C.	United States Code
USFS	United States Forest Service
USFWS	United States Fish and Wildlife Service
UT-CAS	Utah Conservation Agreement Species
UT-SC	Utah Special Concern
UT-SS	Utah Special Status Species
Western	Western Area Power Authority
WWEC	West-wide Energy Corridor

X1.0 INTRODUCTION

This document presents the framework Wildlife and Plant Conservation Measures Plan (Plan) to be undertaken by TransWest Express LLC (TransWest or Applicant) and its Construction Contractor(s) for the avoidance and minimization of impacts to special-status wildlife and plant species as related to construction activities for the TransWest Express Transmission Project (TWE Project or Project). The Plan summarizes the avoidance and minimization measures implemented during siting and routing of the TWE Project and outlines Environmental Mitigation Measures (EMM) to be implemented to protect state- or federally-listed species, Bureau of Land Management (BLM) sensitive species, or United Stated Forest Service (USFS) special-status species or their habitats that are identified within, or adjacent to, the TWE Project right-of-way (ROW).

X1.1 Plan Purpose

The purpose of the Plan is to describe and recommend management actions that will meet regulatory requirements for ROW clearing, habitat disturbance, and impacts to special-status wildlife and plant species. This document provides a framework for the final Plan to be developed prior to initiation of construction.

The objectives of the Plan are to recognize the substantial effort already invested by TransWest in avoiding and minimizing impacts and to present a comprehensive plan that does the following:

- Meets the intent of the current BLM and USFS management guidance for federal lands;
- Ensures compliance with the Endangered Species Act (ESA) and other state and federal protections for special-status species;
- Apply protection measures from a practical perspective based on differences in land ownership and management patterns of the Project; and
- Balances cost, practicality and feasibility of Project implementation with avoiding or minimizing environmental impacts.

X1.2 Plan Updates

The plan will be updated for the Record of Decision (ROD) Plan of Development (POD) based on the selected Agency Preferred Alternative and Best Management Practices (BMPs) and Mitigation Measures defined in the Final Environmental Impact Statement (FEIS), Biological Assessment/Biological Opinion (BA/BO), Biological Evaluation (BE), and through additional consultation with federal and state agencies. Updates in the ROD POD may include: refined species lists per region/line segment, habitats per region/line segment, applicable mitigation, and pre-construction survey requirements.

This Plan will be further updated for the Notice to Proceed (NTP) POD and will have identified impacts and applicable BMPs and Mitigation Measures based on the final engineering and design and results of the pre-construction field surveys. The Construction Contractor(s) will be responsible for implementing the final Wildlife and Plant Conservation Measures Plan.

X1.3 Agency-Specific Requirements

Federal and state agency regulations concerning special status wildlife and plant species are presented in the following sections.

X1.3.1 All Lands

Relevant regulations applicable to all lands include:

- ESA, as amended Section 7(a)(2)
- Fish and Wildlife Conservation Act (16 United States Code [U.S.C.] §§2901 – 2912)
- Bald and Golden Eagle Protection Act (16 U.S.C. §668 et seq.)

X1.3.2 Bureau of Land Management

Relevant regulations applicable to BLM lands include:

- National Environmental Policy Act of 1969 (NEPA), as amended (42 U.S.C. §4321)
- Federal Land Policy and Management Act (FLPMA) 43 U.S.C. §1701
- BLM Field Office Resource Management Plans
- Wild Free-Roaming Horses and Burro Act (Public Law 92-195)

X1.3.3 United States Forest Service

Relevant regulations applicable to USFS lands include:

- FLPMA
- Special Use Authorization (SUA) under the National Forest Management Act (16 U.S.C. §§1601-1614)
- USFS Land and Resource Management Plans
- Forest Service Manual 2670.22, 2670.32

X1.3.4 Bureau of Reclamation

Relevant regulations applicable to Bureau of Reclamation (Reclamation) lands include:

- FLPMA
- Right of Use Authorization

X1.3.5 States

Relevant requirements applicable to operations within each affected state include:

- Wyoming Statutes 23-3-102, 23-3-103
- Colorado Revised Statutes 33-1-101
- Utah Code 23-15-6, 23-15-7, and 23-20-3

- Nevada Administrative Code 503-015-104 and Nevada Revised Statutes 503.584-589 and 503.610

X2.0 SPECIAL STATUS SPECIES PROTECTION MEASURES

The special status species protection measures presented in this section will be finalized based on mitigation measures identified in the FEIS, BA/BO, BE, ROD and through additional agency consultation. Updated mitigation measures will be included in the ROD POD and NTP POD versions of this Plan. Sections X2.0 and X3.0 provide a description of what may be required in future versions of this Plan. All actions described below are subject to change in future versions of this Plan.

The TWE Project has been divided into four regions for analysis in the Draft Environmental Impact Statement (DEIS). The species analyzed within the TWE Project scope are described in this Plan by these four regions. Pre-construction surveys for certain species will be conducted prior to initiation of construction. During these surveys, habitat and/or locations of these species will be identified. Appropriate buffers or restricted areas, identified through current BLM and USFS management plans, state and federal documents, and additional agency consultation, will be applied based on these surveyed locations.

Portions of the TWE Project are located within identified habitats or in proximity to biological resources that may be constrained from construction during certain times of the year (seasonal) or while a resource is present. The DEIS identifies timing and spatial use restrictions for the states of Wyoming and Utah, USFS office jurisdiction, and BLM field office jurisdiction crossed by the TWE Project. No Surface Use (NSU) areas are areas where surface use or permanent structures are not allowed. Controlled Surface Use (CSU) restrictions involve areas where use is permitted under certain constraints such as construction methods or survey requirements. Timing limitations restrict use during key time periods essential to a resource. These restrictions may include a buffer to define the restricted area around a resource. It is important to note that there are additional timing and spatial restrictions related to nesting birds. These measures are discussed in the Avian Protection Plan (Appendix B).

Tables X1, X2, X3, and X4 provide species-specific timing limitations and buffers which were identified in the DEIS from current BLM and USFS management plans, state documents, and federal documents and may be applied to the TWE Project. The restrictions presented below are not to be considered complete at this time.

X2.1 Region I

Region I spans from the northern terminus near Rawlins, Wyoming to southern Moffat County near Massadona, Colorado. The Applicant Proposed and Agency Preferred Alternatives are both considered in this Plan. The routes in Region I cross three BLM Field Offices: Rawlins, Little Snake, and White River. The region is dominated by sagebrush and saltbush shrublands.

TABLE X1 SPECIAL STATUS SPECIES AND TEMPORAL/ SPATIAL RESTRICTIONS FOR REGION I

SPECIES	REGULATORY STATUS WITHIN PROJECT AREA	TIMING RESTRICTION	BUFFER / SPATIAL USE RESTRICTION
Mammals			
White-tailed prairie dog (*Cynomys leucurus*)	BLM	None	Active towns <10 acres, NSU[2]
		4/1 – 6/15[2]	No surface disturbing activities[2]
Wyoming pocket gopher (*Thomomys clusius*)	BLM	Year-round[4]	Active mounds 75 meters[4]
Canada lynx (*Lynx canadensis*)	FT; BLM; CO-SE	None	NSU[2] (mapped habitat)
Black-footed ferret (*Mustela nigripes*)	EXP/NE; BLM; CO-SE	None	Reintroduction areas Occupied habitat Prairie dog towns CSU[2, 3]
			50 meters, CSU[1] (prairie dog towns >200 acres)
All Big Game	Big game	12/1 – 4/30 (crucial winter habitat)[2]	Area closed[2]
		12/1 – 4/30[3] (severe winter range)	No development, TBD[3]
		5/15 – 8/15[3] (summer range)	Conditional, TBD[3]
		5/1 – 6/30[3] (parturition areas)	No surface disturbing activities[3]
Elk (*Cervus canadensis*)	Big game	4/16 – 6/30[2] (parturition areas)	No surface disturbing activities[2]
		5/1 – 7/15[2] (winter range)	CSU
Pronghorn (*Antilocapra americana*)	Big game	5/1 – 7/15[2] (parturition areas)	No surface disturbing activities[2]
Rocky Mountain bighorn sheep (*Ovis canadensis*)	USFS; Big game	5/1 – 7/15[2] (parturition areas)	No surface disturbing activities[2]
			Limited activity[2]
		5/1 – 7/15[2] (winter range)	
Wild horses		Horse Management Area 3/1 – 6/30[2]	HMA closed to motor vehicles[2]
		Water sources 3/1 – 12-1[2]	1 mile, no drilling or development[2]
		Foaling areas 3/1 – 6/15[3]	Limited activity TBD[3]
Birds			
All Waterfowl		None identified	NSU[3]
All Raptors		Year-round[1] (active nests)	NSU, 825 feet no structures requiring repeated human presence[1]
		2/1 – 7/15 or 7/31[1]	0.5 – 1 mile[1]

SPECIES	REGULATORY STATUS WITHIN PROJECT AREA	TIMING RESTRICTION	BUFFER / SPATIAL USE RESTRICTION
		(nests)	
		11/15 – 4/30[1] (winter concentration area)	None identified
Ferruginous hawk (*Buteo regalis*)	BLM	Year-round (active nests)	NSU, 1,200 feet, no structures requiring repeated human presence[1]
		Active nests 3/1 – 7/31[1] 2/1 – 8/15[2,3]	 1,200 feet[1] 1 mile[2,3]
Bald eagle (*Haliaeetus leucocephalus*)	BLM; USFS; CO-ST	Year-round (active nests) [1]	1 mile[1] CSU, 0.5 mile no structures requiring repeated human presence[1]
		Year-round (active communal winter roost)[1]	0.5 mile[1]
		Year-round[2] (all nests and roosts)	100 meter NSU[2] (abandoned nests) 0.25 mile NSU[2] (roosts, unoccupied nests and occupied nests)
		11/15 – 3/15 (various)[2]	0.5 mile, TBD (critical night roost)[2] 0.25 mile, TBD (winter hunting perch)[2]
		11/15 – 4/15[3] (winter concentration area)	0.5 mile[3]
		Active nests 2/1 – 8/15[1] 11/15 – 7/31[2] 12/15 – 7/15[3]	0.5 mile (sites requiring repeated human presence) [1,2,3]
All Game Birds		11/15 – 4/30[1] (winter concentration area)	TBD[1]
		12/1 – 4/30[3] (severe winter range)	No development, TBD[3]
Columbian sharp-tailed grouse (*Tympanuchus phasianellus columbianus*)	BLM; USFS	11/5 – 3/14[1] (delineated concentration area)	No disruptive activities[1]
		3/1 – 7/15[1] (leks nesting/ brood rearing)	1 mile, No disruptive activities[1]
		2/1 – 7/31[1] (TBD nesting areas)	
		TBD (leks)[2]	NSU[2]
		12/16 – 3/15 (crucial winter habitat)[2]	Area closed[2]
Greater sage-grouse (*Centrocercus urophasianus*)	FC; BLM; USFS	Year-round (leks)[2,4] (leks inside core/ connectivity areas)[5]	0.6 mile, NSU[5,2] 4 miles, TBD[4]

SPECIES	REGULATORY STATUS WITHIN PROJECT AREA	TIMING RESTRICTION	BUFFER / SPATIAL USE RESTRICTION
		3/15 – 6/30[5] (core nesting/brood rearing habitat)	No disruptive activities[5]
		Year-round[5] (leks outside core/ connectivity areas)	0.25 mile, CSU[5]
		3/15 – 6/30[5] (nesting/ brood rearing habitat in connectivity areas)	4 miles, No disruptive activities[5]
		3/1 – 7/15[1] (leks, nesting/ brood rearing areas)	2 miles, No disruptive activities[1]
		3/15 – 6/30[5] (nesting/ brood rearing habitat outside core/ connectivity areas)	2 miles, No disruptive activities[5]
		12/1 – 3/14[5] (Late season brood and winter concentration areas)	No disruptive activities[5]
		Activity season (active lek) [1]	0.5 mile, CSU[1]
		11/5 – 3/14[1] (delineated concentration area)	No disruptive activities[1]
		2/1 – 7/31[1] (TBD nesting areas)	
		3/1 – 6/30[2] (leks)	2 miles, TBD[1] Up to 2 miles[1], 4 miles[2], TBD
		12/16 – 3/15[2] (Crucial winter habitat)	Area closed[2]
		Year-round[3] (all known habitats)	CSU[3]
		4/15 – 7/7[3] Year-round[3] (leks)	2 miles[3] 0.25 mile[3]
		12/16 – 3/15[3] (winter habitat)	No development[3]
Mountain plover (*Chardrius montanus*)	BLM; USFS	4/10 – 7/10 (nests)[4]	0.25 mile[4]
Yellow-billed cuckoo (western) (*Coccyzus americanus*)	FC; BLM	6/1 – 8/1[2] 4/15 – 8/15[1] (identified habitat)	Area closed[2] 0.5 mile[1]
		3/15 – 10/15[4] (suitable habitat)	
		Year-round[2]	NSU, 0.25 mile[2]
Mexican spotted owl (*Strix occidentalis lucida*)	FT; BLM; CO-ST	3/1 – 7/31[1] 3/1 – 8/31[2] Year-round (Protected Activity Centers)	0.75 mile[1] NSU[2]

SPECIES	REGULATORY STATUS WITHIN PROJECT AREA	TIMING RESTRICTION	BUFFER / SPATIAL USE RESTRICTION
Northern harrier (*Circus cyaneus*)		4/1 – 7/31[1] 2/1 – 8/15[3]	0.75 mile[1] 0.25 mile[3]
Sharp-shinned hawk (*Acciptier striatus*)		4/1 – 7/31[1] 2/1 – 8/15[2,3]	0.75 mile[1] 0.25 mile[2,3]
Cooper's hawk (*Accipiter cooperii*)		4/1 – 7/31[1] 2/1 – 8/15[2,3]	0.75 mile[1] 0.25 mile[2,3]
Northern goshawk (*Accipiter gentilis*)	BLM; USFS	4/1 – 8/31[1] 2/1 – 8/15[3]	0.75 mile[1] 0.5 mile[3]
Swainson's hawk (*Buteo swainsoni*)	BLM	4/1 – 7/31[1] 2/1 – 8/15[3]	0.75 mile[1] 0.5 mile[3]
Red-tailed hawk (*Buteo jamaicensis*)		2/1 – 7/15[1] 2/1 – 8/15[3]	0.75 mile[1] 0.25 mile[3]
Golden eagle (*Aquila chrysaetos*)	BLM	2/1 – 7/15[1] 2/1 – 8/15[3]	1 mile[1] 0.5 mile[3]
Osprey (*Pandion haliaetus*)		4/1 – 7/31[1] 4/1 – 8/31[2] 2/1 – 8/15[3]	0.75 mile[1] 0.5 mile[2] 0.25 mile[3]
Merlin (*Falco columbarius*)		4/1 – 7/31[1] 2/1 – 8/15[2,3]	0.75 mile[1] 0.25 mile[2,3]
American kestrel (*Falco sparverius*)		4/1- 7/31[1] 2/1 – 8/15[3]	0.75 mile[1] 0.25 mile[3]
Prairie falcon (*Falco mexicanus*)	BLM	4/1 – 7/31[1] 2/1 – 8/15[3]	0.75 mile[1] 0.5 mile[3]
Peregrine falcon (*Falco peregrinus*)	BLM; USFS	3/1 – 7/31[1] 3/16 – 7/31[2] 2/1 – 8/15[3]	0.75 mile[1] 0.5 mile[2,3]
Greater sandhill crane (*Grus canadensis*)		3/1 – 10/16[2]	None specified[2]
Barn owl (*Tyto alba*)		2/1 – 7/15[1]	0.75 mile[1]
Long-eared owl (*Asio otus*)	BLM	3/1 – 7/31[1] 2/1 – 8/15[3]	0.75 mile[1] 0.5 mile[3]
Short-eared owl (*Asio flammeus*)	BLM; UT-SS	3/1 – 7/31[1] 2/1 – 8/15[3]	0.75 mile[1] 0.5 mile[3]
Great horned owl (*Bubo virginianus*)		2/1 – 7/15[1] 2/1 – 8/15[3]	0.75 mile[1] 0.25 mile[3]
Burrowing owl (*Athene cunicularia*)	BLM; CO-ST; UT-SS	4/15 – 9/15[1] 2/1 – 8/15[2]	0.75 mile[1] 0.5 mile[2]
Western screech owl (*Megascops kennicottii*)		3/1 – 7/31[1] 2/1 – 8/15[2]	0.75 mile[1] 0.25 mile[2]
Fish			
Colorado River cutthroat trout (*Oncorhynchus clarkii pleuriticus*)	BLM; USFS; UT-CAS	Approx. April – May[4]	No water withdrawals or habitat disturbance[4]
Colorado pikeminnow (*Ptychocheilus lucius*)	FE; BLM		NSU (critical / occupied habitat)[2, 4]
Game Fish Species	BLM	Spring or fall spawning	
Plants			
Ute ladies'-tresses orchid (*Spiranthes diluvialis*)	FT	Year-round	0.25 mile (known orchid habitat)[1, 2] 300 feet[4]

[1] BLM Rawlins Field Office; [2] BLM Little Snake Field Office; [3] BLM White River Field Office;
[4] Draft EIS Additional Mitigation Measures; [5] State of Wyoming
NSU = No Surface Use; CSU = Controlled Surface Use; BLM = BLM sensitive; USFS = U.S. Forest Service sensitive;
FE = Federally Endangered; FT = Federally Threatened; FC = Federal Candidate; CO-E = Colorado Endangered Species;
UT-CAS = Utah Conservation Agreement Species; UT-SS = Utah Special Status species; WY-N = Wyoming Native; HMA = Herd Management Area; CO-ST = Colorado State Threatened

X2.2 Region II

Region II spans from southern Moffat County near Massadona, Colorado to central Utah near Delta. A final decision on the selected route has yet to be made. The Applicant Proposed and Agency Preferred Alternatives are both considered in this Plan. As these routes cross different BLM Field Offices and National Forests, some requirements included below may not all be relevant to the selected Agency Preferred Alternative. The Applicant Proposed route crosses: White River, Vernal, Salt Lake, Richfield, and Fillmore BLM Field Offices and Uinta and Manti-La Sal National Forests. The Agency Preferred route crosses: White River, Vernal, Salt Lake, Richfield, and Fillmore BLM Field Offices and Uinta and Manti-La Sal National Forests. Potential access roads may enter the Ashley National Forest. This region is dominated by pinyon-juniper woodlands as well as sagebrush and saltbush shrublands.

TABLE X2 SPECIAL STATUS SPECIES AND TEMPORAL/ SPATIAL RESTRICTIONS FOR REGION II

SPECIES	REGULATORY STATUS WITHIN PROJECT AREA	TIMING RESTRICTION	BUFFER / SPATIAL USE RESTRICTION
Mammals			
Utah prairie dog (*Cynomys parvidens*)	FT; BLM; UT-SS Tier I	Year-round [5] (Historic and occupied colonies)	350 feet, CSU[5]
		4/1 – 9/30[5] Year-round [5] (Historic and occupied habitat)	Conduct activities[5] 0.5 mile, CSU[5]
White-tailed prairie dog (*Cynomys leucurus*)	BLM	Year-round[1,2] (colonies)	660 feet, NSU[1,2]
Pygmy rabbit (*Brachylagus idahoensis*)	BLM; USFS; UT-SS Tier II		0.5 mile[9]
Canada lynx (*Lynx canadensis*)	FT; BLM; CO-SE; UT-SS Tier I	Year-round[2,3] (occupied denning habitat)	CSU[2,3]
		4/15 – 6/30[2] (potential denning habitat)	No construction, maintenance during daylight[2]
Black-footed ferret (*Mustela nigripes*)	EXP/NE; BLM; CO-SE; UT-SS	Year-round (known or potential habitat)	CSU[1,3]
		5/1 – 7/15[2] (known home ranges)	0.125 mile (known home ranges)[2]
All Big Game		12/1 – 4/30[3] (severe winter range)	No development, TBD[3]
		Winter range[8]	No activities that disturb wintering game[8]
		12/15 – 4/15[5] (crucial winter range)	No surface disturbing activities[5]
		5/15 – 8/15[3] (summer range)	Conditional, TBD[3]

SPECIES	REGULATORY STATUS WITHIN PROJECT AREA	TIMING RESTRICTION	BUFFER / SPATIAL USE RESTRICTION
		5/1 – 6/30[3] 5/1 – 6/30[3] (parturition areas)	No surface disturbing activities[3]
Elk (*Cervus canadensis*)	Big game	5/15 – 6/30[2] 5/1 – 6/30[4] (Parturition/calving areas)	No development[2] No disturbing activities[4]
		12/4 – 4/30[2] 12/1 – 4/15[1,3] 12/1 – 4/30[4] 12/1 – 3/30[7] (crucial winter range)	Area closed[1,3] No disturbing activities[4,7]
		5/15 – 7/5[1,3] (fawning/calving areas)	Area closed[1,3]
Mule deer (*Odocoileus hemionus*)	Big game	5/15 – 6/30[2] 4/15 – 7/31[4] (Parturition/calving areas)	No development[2] No disturbing activities[4]
		12/1 – 4/15[1,3] 12/4 – 4/30[2] 12/1 – 4/15[4]	Area closed[1,3] No disturbing activities[4]
		Year-round[2] (crucial winter range)	CSU[2]
		5/15 – 7/5 (fawning/calving areas) [3]	Area closed[3]
Moose (*Alces alces*)	Big game	12/1 – 4/15[1,3] (crucial winter range)	Area closed[1,3]
Pronghorn (*Antilocapra americana*)	Big game	5/1 – 6/30[2] 4/15 – 7/1[4] (parturition areas)	 No disturbing activities[4]
Bighorn sheep (*Ovis canadensis*), all varieties	BLM; USFS; Big game	4/15 – 6/15[1,3] (spring/lambing range)	Area closed[1,3]
		TBD[4]	CSU[4]
Wild Horses		Foaling areas: 3/1 – 6/15[4]	Limited activity TBD[4]
Birds			
All Migratory Birds		4/15 – 8/15[1] (TBD high-value breeding habitat)	Area closed[1]
California condor (*Gymnogyps californianus*)	FE; BLM; EXP/NE-UT; UT-SS Tier I	Year-round[5] 8/1 – 11/31[5,10] (roosts)	0.5 mile, NSU[5] 0.5 mile, restricted activity[5,10]
		Breeding season undefined[2,5,6] 1/1 – 8/31[10] (nests)	1 mile[2,5,6,7,10]
Bald eagle (*Haliaeetus leucocephalus*)	BLM; USFS; CO-ST; UT-SS Tier I	11/15 – 4/15[3] (winter concentration	0.5 mile[3]

SPECIES	REGULATORY STATUS WITHIN PROJECT AREA	TIMING RESTRICTION	BUFFER / SPATIAL USE RESTRICTION
		area)	
		Year-round[5] 11/1 – 3/31[5,10] 11/15 – 3/15[4] (roost/ concentration area)	NSU[3,5], CSU[3,4,5] 0.5 mile[4,5,10]
		12/15 – 7/15[3] (nests) 1/1 – 8/31[1,3,5,6,7] (nests)	0.5 mile (sites requiring repeated human presence) [3] 1 mile[1,2,5,6,7]
Greater sage-grouse (*Centrocercus urophasianus*)	FC; BLM; USFS; UT-SS Tier II	Year-round[3] (all known habitats)	CSU[3]
		TBD 3/1 – 6/15[2,7] 4/15 – 7/7[3] 3/15 – 7/15[1,5] 3/1 – 7/31[6] (leks)	4 miles[9] 2 miles[1,2,3,5] 0.5 mile or line of sight (Strawberry pop'n.)[7] No disruptive activities[5], No surface disturbing activities[2] CSU[6]
		2/15 – 6/150[4] (leks and nesting habitat)	0.5 mile, No disturbing activities[4]
		Year-round[1,2,3,4,5,7] (leks)	0.25 mile[2,3] NSU 0.5[2] and 2 mile[2] CSU 0.5 mile, NSU[1,4,5] 300 yards[7] CSU
		12/1 – 3/14[1] 12/16 – 3/15[3] 12/16 – 3/15[5] (winter habitat)	No development[3] No disruptive activities[1,5]
		12/1 – 3/1[4] (winter crucial habitat)	No disturbing activities[4]
Mountain plover (*Chardrius montanus*)	BLM; USFS; UT-SS;	4/10 – 7/10 (nests)[9]	0.25 mile[9]
Yellow-billed cuckoo (western) (*Coccyzus americanus*)	FC; BLM;UT-SS Tier I	3/15 – 10/15[9] (suitable habitat)	Suitable habitat[9]
Mexican spotted owl (*Strix occidentalis lucida*)	FT; BLM; CO-ST; UT-SS	Year-round[1,2] (Protected Activity Center or designated habitat)	0.5 mile[2], NSU[2], CSU[1]
		2/1 – 8/15[3] 3/1 – 8/31[1,2,5,6,7]	0.25 mile[1,2,3,5,7]
Southwestern willow flycatcher (*Empidonax traillii extimus*)	FE; BLM; CO-SE; UT-SS Tier I	Year-round[5] (suitable habitat)	300 feet NSU[5] 0.25 mile NSU[5] 0.5 mile CSU[5]
		3/15 – 10/15[9] (suitable habitat)	Suitable habitat[9]
		5/1 – 8/15[5] (occupied breeding habitat)	0.25 mile, CSU[7],
Turkey vulture (*Cathartes aura*)		5/1 – 8/15[1,2,5,6,7] 3/1 – 7/15[4]	0.5 mile[1,2,5,4,7]
Northern harrier		2/1 – 8/15[3]	0.25 mile[3]

SPECIES	REGULATORY STATUS WITHIN PROJECT AREA	TIMING RESTRICTION	BUFFER / SPATIAL USE RESTRICTION
(*Circus cyaneus*)		4/1 – 8/15[1,2,5,6,7] 3/1 – 7/15[4]	0.5 mile[1,2,4,5,6,7]
Sharp-shinned hawk (*Acciptier striatus*)		2/1 – 8/15[3] 3/15 – 8/31[1,2,5,6,7] 3/1 – 7/15[4]	0.25 mile[3] 0.5 mile[1,2,4,5,6,7]
Cooper's hawk (*Accipiter cooperii*)		2/1 – 8/15[3] 3/15 – 8/31[1,2,5,6,7] 3/1 – 7/15[4]	0.25 mile[3] 0.5 mile[1,2,4,5,6,7]
Northern goshawk (*Accipiter gentilis*)	BLM; USFS; UT-SS Tier I	2/1 – 8/15[3] 3/1 – 8/15[1,2,5,6,7] 3/1 – 7/15[4]	0.5 mile[1,2,3,4,5,6,10] 420-acre post-fledgling areas[7]
Swainson's hawk (*Buteo swainsoni*)	BLM	2/1 – 8/15[3] 3/1 – 8/31[1,2,5,6,7] 3/1 – 7/15[4]	0.5 mile[1,2,3,4,5,6,7]
Red-tailed hawk (*Buteo jamaicensis*)		2/1 – 8/15[3] 3/15 – 8/31[1,2,5,6] 3/15 – 8/15[7] 3/1 – 7/15[4]	0.25 mile[3] 0.5 mile[1,2,4,5,6,7]
Ferruginous hawk (*Buteo regalis*)	BLM; UT-SS Tier II	2/1 – 8/15[3] 3/1-8/1[1,2,5,6,7] 3/1 – 7/15[4]	1 mile[3] 0.5 mile[1,2,4,5,6,7]
Golden eagle (*Aquila chrysaetos*)	BLM	2/1 – 8/15[3] 1/1 – 8/31[1,2,5,6,7] 3/1 – 7/15[4]	0.5 mile[1,2,3,4,5,6,7]
Osprey (*Pandion haliaetus*)		2/1 – 8/15[3] 4/1 – 8/31[1,2,5,6,7] 3/1 – 7/15[4]	0.25 mile[3] 0.5 mile[1,2,4,5,6,7]
Merlin (*Falco columbarius*)		2/1 – 8/15[3] 4/1 – 8/31[1,2,5,6,7] 3/1 – 7/15[4]	0.25 mile[3] 0.5 mile[1,2,4,5,6,7]
American kestrel (*Falco sparverius*)		2/1 – 8/15[3] 3/1 – 7/15[4]	0.25 mile[3] 0.5 mile[4]
Prairie falcon (*Falco mexicanus*)	BLM	2/1 – 8/15[3] 4/1 – 8/31[1,2,5,6,7] 3/1 – 7/15[4]	0.5 mile[1,2,3,4,5,6,7]
Peregrine falcon (*Falco peregrinus*)	BLM; USFS	2/1 – 8/15[3] 2/1 – 8/31[1,2,5,6,7] 3/1 – 7/15[4]	0.5 mile[3,4] 1 mile[1,2,5,6,7]
Long-eared owl (*Asio otus*)	BLM	2/1 – 8/15[1,2,3,5,6,7] 3/1 – 7/15[4]	0.5 mile[3,4] 0.25 mile[1,2,5,6,7]
Short-eared owl (*Asio flammeus*)	BLM; UT-SS Tier II	2/1 – 8/15[3] 3/1 – 8/1[1,2,5,6,7] 3/1 – 7/15[4]	0.5 mile[3,4] 0.25 mile[1,2,5,6,7]
Great horned owl (*Bubo virginianus*)		2/1 – 8/15[3] 12/1 – 9/30[1,2,5,6,7] 3/1 – 7/15[4]	0.25 mile[1,2,3,5,6,7] 0.5 mile[4]
Boreal owl (*Aegolius funereus*)	USFS	2/1 – 7/31[1,2,5,6,7] 3/1 – 7/15[4]	0.25 mile[1,2,5,6,7] 0.5 mile[4]
Northern saw-whet owl (*Aegolius acadicus*)		3/1 – 8/31[1,2,5,6,7] 3/1 – 7/15[4]	0.25 mile[1,2,5,6,7] 0.5 mile[4]
Burrowing owl (*Athene cunicularia*)	BLM; CO-ST; UT-SS Tier II	2/1 – 8/15[3] 3/1 – 8/31[1,2,5,6,7] 3/1 – 7/15[4]	0.5 mile[3,4] 0.25 mile[1,2,5,6,7]

SPECIES	REGULATORY STATUS WITHIN PROJECT AREA	TIMING RESTRICTION	BUFFER / SPATIAL USE RESTRICTION
Flammulated owl (*Otus flammeolus*)	BLM; USFS	4/1 – 9/30[1,5,6,7,10] 3/1 – 7/15[4]	0.25 mile[1,5,6,7,10] 0.5 mile[4]
Western screech owl (*Megascops kennicottii*)		2/1 – 8/15[3] 3/1 – 8/15[1,2,5,6,7] 3/1 – 7/15[4]	0.25 mile[1,2,3,5,6,7] 0.5 mile[4]
Northern pygmy owl (*Glaucidium californicum*)		4/1 – 8/1[1,2,5,6,7] 3/1 – 7/15[4]	0.25 mile[1,2,5,6,7] 0.5 mile[4]
Three-toed woodpecker (*Picoides dorsalis*)	BLM; USFS; UT-SS Tier II	4/15 – 9/1[7]	30-acre nest areas[7]
Amphibians			
Boreal toad (*Bufo boreas boreas*)	USFS; UT-CAS; CO-E	4-5 weeks following snowmelt[7]	None
		Year-round[9]	Breeding habitat in Sowers Creek[9]
Fish			
Humpback chub (*Gila cypha*)	FE; BLM		0.25 mile of channel centerline (Colorado, Green, Duchesne, Price, White, and San Rafael Rivers)[2] NSU (within critical habitat) [9]
Southern leatherside chub (*Lepidomeda aliciae*)	BLM; USFS; UT-CAS	Approx. April – June[9]	Spawning areas[9]
Bonneville cutthroat trout (*Oncorhynchus clarki utah*)	BLM; USFS; UT-SC; UT-CAS		No water withdrawals[9]
Colorado River cutthroat trout (*Oncorhynchus clarkii pleuriticus*)	BLM; USFS; UT-CAS		CSU[3] No water withdrawals[9]
Colorado pikeminnow (*Ptychocheilus lucius*)	FE; BLM		0.25 mile of channel centerline (Colorado, Green, Duchesne, Price, White, and San Rafael Rivers)[2]
			NSU (within critical habitat) [9]
Razorback sucker (*Xyrauchen texanus*)	FE; BLM		0.25 mile of channel centerline (Colorado, Green, Duchesne, Price, White, and San Rafael Rivers)[2]
			NSU (within critical habitat)[9]
Colorado River Fishes	BLM	None	CSU (floodplains, current populations)[1]
Invertebrates			
California floater (*Anodonta californiensis*)	BLM		Currant Creek (surveys required if instream construction)[9]
Southern Bonneville pyrg (*Pyrgulopsis transversa*)	UT-SC		300 feet (Thistle Creek)[9]
Plants			
Deseret milkvetch (*Astragalus desereticus*)	FT		Known plants / populations / suitable habitat[9]

SPECIES	REGULATORY STATUS WITHIN PROJECT AREA	TIMING RESTRICTION	BUFFER / SPATIAL USE RESTRICTION
Maguire daisy (*Erigeron maguirei*)	BLM; USFS	5/1 – 6/30[5]	300 feet (from plants and avoidance areas)[5]
San Rafael cactus (*Pediocactus despainii*)	FE		100 feet (from plants)[5]
Winkler cactus (*Pediocactus winkleri*)	FT	3/1 – 6/1	300 feet (from plants and avoidance areas)[5]
Clay phacelia (*Phacelia argillacea*)	FE		Known plants/populations[9]
Clay reed-mustard (*Schoenocrambe argillacea*)	FT	5/1 – 6/5	300 feet (occupied habitat)[2]
Shrubby reed-mustard (*Schoenocrambe suffrutescens*)	FE	4/15 – 5/30	300 feet (from plants)[2]
Uinta Basin hookless cactus (*Sclerocactus wetlandicus*)	FT		Level 1 and 2 core areas[9]
Wright fishhook cactus (*Sclerocactus wrightiae*)	FE	4/15 – 6/15	300 feet (from plants and avoidance areas)[5]
Ute ladies'-tresses orchid (*Spiranthes diluvialis*)	FT	None	300 feet (occupied habitat)[2,5]
			300 feet (riparian habitat conservation areas)[7]
			300 feet[9]
Thompson talinum (*Talinum thompsonii*)	BLM	None	0.25 mile (known orchid habitat)[2]
Last Chance townsendia (*Townsendia aprica*)	FT	4/15 – 6/30	Access roads will be graveled within occupied habitat[5]

[1] BLM Price Field Office; [2] BLM Vernal Field Office; [3] BLM White River Field Office; [4] BLM Salt Lake Field Office; [5] BLM Richfield Field Office; [6] BLM Fillmore Field Office; [7] USFS Uinta National Forest; [8] USFS Manti-La Sal National Forest; [9] Draft EIS Additional Mitigation Measures;[10] State of Utah
NSU = No Surface Use; FE = Federally Endangered; FC = Federal Candidate; BLM = BLM sensitive species;
USFS = U.S. Forest Service special status species; CO-E = Colorado Endangered Species; UT-SS = Utah Special Status;
UT-SC = Utah Special Concern; UT-CAS = Utah Conservation Agreement Species; CO-SE = Colorado – State Engendered;
EXP/NE = Experimental/Non-essential

X2.3 Region III

Region III spans from central Utah near Delta to Apex, Nevada north of Las Vegas. The Agency Preferred Alternative was considered in this Plan for Region III. The Agency Preferred route crosses: Fillmore and Cedar City Field Offices in Utah, and Ely, and Las Vegas Field Offices in Nevada. This region is dominated by desert shrub, pinyon-juniper woodlands, and sagebrush shrubland.

TABLE X3 SPECIAL STATUS SPECIES AND TEMPORAL/ SPATIAL RESTRICTIONS FOR REGION III

SPECIES	REGULATORY STATUS WITHIN PROJECT AREA	TIMING RESTRICTION	BUFFER / SPATIAL USE RESTRICTION
Mammals			
Utah prairie dog (*Cynomys parvidens*)	FT; BLM; UT-SS Tier I	Year-round[2]	CSU[2]
All Big Game	Big game	4/15 – 6/30[4] (Parturition areas)	
		11/1 – 3/31[4] (Crucial	

SPECIES	REGULATORY STATUS WITHIN PROJECT AREA	TIMING RESTRICTION	BUFFER / SPATIAL USE RESTRICTION
		winter habitat)	
Elk (*Cervus canadensis*)	Big game	5/1 – 7/30[3] (Parturition areas)	No activity[3]
Mule deer (*Odocoileus hemionus*)	Big game	5/1 – 7/30[3] (Parturition areas)	No activity[3]
		11/1 – 4/15[3] (crucial winter range)	No activity[3]
Rocky Mountain bighorn sheep (*Ovis canadensis*)	USFS	3/1 – 5/31[4]	
		7/1 – 8/31[4] (Occupied habitat)	
Desert bighorn sheep (*Ovis canadensis nelsoni*)	BLM; USFS	3/1 – 5/31[4]	
		7/1 – 8/31[4] (Occupied habitat)	
		1/1 – 5/1[5] (lambing areas in Sloan Canyon conservation area)	
Birds			
California condor (*Gymnogyps californianus*)	FE; BLM; EXP/NE-UT; UT-SS Tier I	8/1 – 11/31[7] (roosts)	0.5 mile, TBD[7]
		Breeding season undefined[1] 1/1 – 8/31[7]	1 mile[1,7]
Golden eagle (*Aquila chrysaetos*)	BLM	2/15 – 6/30[2] (roost sites Paragonah to St. George)	No activity[2]
		1/1 – 8/31[1] (nests)	0.5 mile[1] 600 feet[2]
Bald eagle (*Haliaeetus leucocephalus*)	BLM; USFS; UT-SS Tier I; NV-P	2/15 – 6/30[2] (roost sites Paragonah to St. George)	No activity[2]
		11/1 – 3/31[7] (roosts)	0.5 mile, TBD[7]
		1/1 – 8/31[1] (nests)	1 mile[1] 600 feet[2]
Greater sage-grouse (*Centrocercus urophasianus*)	FC; BLM; USFS; UT-SS Tier II;	Year-round[1,4,6] (occupied habitat)	2 miles, CSU[1,4], NSU[4] 4 miles[6]
		3/1 – 7/31[1] 3/1 – 5/15[2,4] (leks)	Reduced activity[2], 2 miles TBD[4]
		11/1 – 3/31[4] (winter range)	TBD[4]
		2/28 – 5/16[2] (Pinyon Planning Unit)	No activity[2]
		3/15 – 5/1[2] (Sigurd to Paragonah)	No activity[2]
Yellow-billed cuckoo (western) (*Coccyzus americanus*)	FC; BLM;UT-SS Tier I; NV-P	3/15 – 10/15[6] (suitable habitat)	
Southwestern willow flycatcher (*Empidonax traillii extimus*)	FE; BLM; UT-SS Tier I; NV-P	3/15 – 10/15[6] (suitable habitat)	
Turkey vulture		5/1 – 8/15[1]	0.5 mile[1]

SPECIES	REGULATORY STATUS WITHIN PROJECT AREA	TIMING RESTRICTION	BUFFER / SPATIAL USE RESTRICTION
(*Cathartes aura*)			
Northern harrier (*Circus cyaneus*)		4/1 – 8/15[1]	0.5 mile[1]
Sharp-shinned hawk (*Acciptier striatus*)		3/15 – 8/31[1]	0.5 mile[1]
Cooper's hawk (*Accipiter cooperii*)		3/15 – 8/31[1]	0.5 mile[1]
Northern goshawk (*Accipiter gentilis*)		3/1 – 8/15[1]	0.5 mile[1]
Swainson's hawk (*Buteo swainsoni*)	BLM	3/1 – 8/31[1]	0.5 mile[1]
Red-tailed hawk (*Buteo jamaicensis*)		3/15 – 8/15[1]	0.5 mile[1]
Ferruginous hawk (*Buteo regalis*)	BLM; UT-SS Tier II; NV-P	3/1-8/1[1]	0.5 mile[1]
Osprey (*Pandion haliaetus*)		4/1 – 8/31[1]	0.5 mile[1]
Merlin (*Falco columbarius*)		4/1 – 8/31[1]	0.5 mile[1]
Prairie falcon (*Falco mexicanus*)	BLM	4/1 – 8/31[1]	0.25 mile[1]
Peregrine falcon (*Falco peregrinus*)	BLM; USFS; NV-P	2/1 – 8/31[1]	1 mile[1]
Long-eared owl (*Asio otus*)	BLM	2/1 – 8/15[1]	0.25 mile[1]
Short-eared owl (*Asio flammeus*)	BLM; UT-SS Tier II	3/1 – 8/1[1]	0.25 mile[1]
Great horned owl (*Bubo virginianus*)		12/1 – 9/30[1]	0.25 mile[1]
Mexican spotted owl (*Strix occidentalis*)	FT; BLM; UT-SS	3/1 – 8/31[1]	0.5 mile (no temporary disturbance)[1] 0.5 mile (no surface occupancy)[1] No actions within 0.5 mile of identified nest site in Utah[6]
Boreal owl (*Aegolius funereus*)	USFS	2/1 – 7/31[1]	0.25 mile[1]
Northern saw-whet owl (*Aegolius acadicus*)		3/1 – 8/31[1]	0.25 mile[1]
Burrowing owl (*Athene cunicularia*)	BLM; UT-SS Tier II	3/1 – 8/31[1]	0.25 mile[1]
Flammulated owl (*Otus flammeolus*)	USFS	4/1 – 9/30[1]	0.25 mile[1]
Western screech owl (*Megascops kennicottii*)		3/1 – 8/15[1]	0.25 mile[1]
Northern pygmy owl (*Glaucidium californicum*)		4/1 – 8/1[1]	0.25 mile[1]
Reptiles			
Desert tortoise (*Gopherus agassizii*)	FT; BLM; UT-SS Tier I; NV-P	Year-round[6]	

SPECIES	REGULATORY STATUS WITHIN PROJECT AREA	TIMING RESTRICTION	BUFFER / SPATIAL USE RESTRICTION
Fish			
Meadow Valley Wash desert sucker (*Catostomus clarkii spp.*)	BLM; NV-P		No vehicle crossings in Muddy River[6]
Moapa White River springfish (*Crenichthys baileyi moapae*)	NV-P		No vehicle crossings in Muddy River[6]
Virgin River chub (*Gila robusta seminuda*)	FE; BLM		NSU (within critical habitat)[6]
			No vehicle crossings in Muddy River[6]
Moapa speckled dace (*Rhinichthys osculus moapae*)	NV-P		No vehicle crossings in Muddy River[6]
Meadow Valley Wash speckled dace (*Rhinicthys osculus subspecies*)	BLM		No vehicle crossings in Muddy River[6]
Plants			
Ute ladies'-tresses orchid (*Spiranthes diluvialis*)	FT; BLM; NV – CE	None	300 feet[6]

[1]BLM Fillmore Field Office; [2]BLM Cedar City Field Office; [3]BLM Saint George Field Office; [4]BLM Ely Field Office;
[5]BLM Las Vegas Field Office; [6]Draft EIS Additional Mitigation Measures; [7]State of Utah
BLM = BLM sensitive species; NV-P = Nevada Protected; UT-SC = Utah Special Concern; FE = Federally Endangered;
FT = Federally Threatened; FC = Federal Candidate; USFS = U.S. Forest Service sensitive species;
NV – CE = Nevada critically endangered; NV – PCE = Nevada proposed critically endangered;
NV – CY = Nevada protected cactus / yucca

X2.4 Region IV

Region IV spans from Apex, Nevada to the Eldorado Valley near Boulder City, Nevada. As the Applicant Proposed and Agency Preferred Alternatives are the same, this is the only route considered in the Plan. The route is entirely within the Las Vegas Field Office of the Southern Nevada BLM District. The region is dominated by desert shrub and disturbed/developed lands.

TABLE X4 SPECIAL STATUS SPECIES AND TEMPORAL/ SPATIAL RESTRICTIONS FOR REGION IV

SPECIES	REGULATORY STATUS WITHIN PROJECT AREA	TIMING RESTRICTION	BUFFER / SPATIAL USE RESTRICTION
Mammals			
Desert bighorn sheep (*Ovis canadensis nelsoni*)	BLM; USFS	1/1 – 5/1[1]	Lambing areas in Sloan Canyon conservation area[1]
Birds			
Yellow-billed cuckoo (western) (*Coccyzus americanus*)	FC; BLM; NV-P	3/15 – 10/15[2] (suitable habitat)	Suitable habitat[2]
Southwestern willow flycatcher (*Empidonax traillii extimus*)	FE; BLM; NV-P	3/15 – 10/15[2] (suitable habitat)	Suitable habitat[2]
Fish			
Razorback sucker (*Xyrauchen texanus*)	FE; BLM		NSU (within critical habitat)[2]

[1]BLM Las Vegas Field Office; [2]Draft EIS Additional Mitigation Measures

BLM = BLM sensitive species; FE = Federally Endangered; FT = Federally Threatened; FC = Federal Candidate;
USFS = U.S. Forest Service sensitive species; NV – CE = Nevada critically endangered;
NV – PCE = Nevada proposed critically endangered; NV – CY = Nevada protected cactus / yucca

X3.0 WILDLIFE AND PLANT PROTECTION MEASURES

Through a process of scoping, public review, and development of the DEIS, wildlife species of concern have been identified for the TWE Project. Appropriate protection measures to avoid and minimize impacts to sensitive species will be implemented as provided for in the BA/BO, BE, and ROD. To reduce anticipated impacts, the DEIS included protection measures that will be refined through development of the FEIS and through agency consultation.

X3.1 Protection Measures

Measures to protect wildlife are being developed through the NEPA process and in subsequent consultations with state and federal agencies. The measures presented in the DEIS are outlined below. This iteration of the Plan is intended to be used as a framework to incorporate future minimization and mitigation measures and should not be considered as complete. Minimization and mitigation measures will be updated based on information provided in the FEIS, BA/BO, BE, and continued agency consultation in the ROD POD and NTP POD versions of this Plan. The Plan should be used to guide the Construction Contractor(s) in the construction of the TWE Project.

X3.1.1 West-wide Energy Corridor Programmatic EIS Best Management Practices

TransWest has incorporated BMPs into the proposed mitigation measures for the TWE Project. The TWE Project is located within portions of the West-wide Energy Corridor (WWEC). This being the case, BMPs developed as part of the Programmatic EIS will be implemented on all projects located within the West-wide Energy Corridor.

- **RC-3:** The appropriate agency, assisted by the project applicant, must consult with the U.S. Fish and Wildlife Services (USFWS) and the National Marine Fisheries Service (NMFS) as required by Section 7 of ESA. The specific consultation requirements, as set forth in regulations at 50 CFR Part 402, would be applied on a project-by-project basis. Applicants shall identify known occupied sites, such as nest sites, for threatened and endangered species and special status species.

- **WAT-10:** The applicant shall minimize stream crossings by access roads to the extent practicable. All structures crossing intermittent and perennial streams should be located and constructed so that they do not decrease channel stability, increase water velocity, or impede fish passage.

- **ECO-1:** Applicants shall identify important, sensitive, or unique habitats and BLM sensitive, FS Sensitive, and state-listed species in the vicinity of proposed projects and, to the extent feasible, design the project to avoid, minimize, or mitigate impacts to these habitats and species.

- **ECO-4:** Areas that are known to support ESA-listed species, BLM-sensitive, FS-sensitive, and state-listed species or their habitats must be identified and marked with flagging or other appropriate means to avoid direct impacts during construction activities. Construction

activities upslope of these areas should be avoided to prevent indirect impacts of surface water and sediment runoff.

- **ECO-6:** Applicants shall review existing information regarding plant and animal impacts to the applicable agencies.

- **ECO-7:** Project staff shall avoid harassment or disturbance of wildlife, especially during reproductive courtship, migratory, and nesting seasons.

- **ECO-8:** Observations by project staff of potential wildlife problems, including wildlife mortality, will be immediately reported to the applicable agency authorized officer.

X3.1.2 TWE Applicant Proposed Measures

The following Applicant Proposed Measures were identified in the DEIS as applicant-committed environmental protection measures or design features proposed by TransWest that are being taken into account to further reduce impacts to plant and wildlife resources. The following measures will be applied to all portions of the TWE Project. Note that the Construction, Operation and Maintenance Plan (COM Plan) will be a part of the NTP POD.

- **TWE-2:** The Applicant will comply with all applicable environmental laws and regulations. Applicable laws and regulations may include, but are not limited to, the Clean Water Act (CWA) Section 303(d) and Section 404; the Wildlife and Scenic River Act, Section 3(a) or 2(a) ii; the ESA, Section 7; the National Historic Preservation Act, Section 106; and the Native American Graves protection and Repatriation Act (NAGPRA). Compliance with all applicable laws and regulations will be documented in the Final Plan of Development (POD)/Construction, Operation, and Maintenance (COM) Plan.

- **TWE-29:** The COM Plan will include a Biological Protection Plan, which will identify important, sensitive, or unique habitats and BLM-sensitive, USFS-sensitive, and state-listed species in the vicinity of the TWE Project. The COM Plan will identify measures to be taken to avoid, minimize, or mitigate impacts to these habitats and species.

- **TWE-31:** Mitigation measures that will be developed during the consultation period with the BLM and under Section 7 of the ESA will be adhered to, along with mitigation developed in conjunction with state authorities.

- **TWE-32:** Seasonal restrictions may be implemented in certain areas to mitigate impacts on wildlife. With the exception of emergency repair situations, ROW construction, restoration, maintenance, and termination activities in designated areas will be modified or discontinued during sensitive periods (e.g., nesting and breeding periods) for candidate, proposed or listed threatened and endangered, or other sensitive animal species, as required by permitting agencies. Potential seasonal restrictions and avoidance buffers for nesting raptors will be identified in the DEIS. The Biological Protection Plan will incorporate the seasonal restrictions and stipulations contained in the federal agency Records of Decision (RODs).

- **TWE-33:** Prior to the start of construction, the Applicant will provide training to all Contractor and Subcontractor personnel and others involved in construction activities where/if there is a known occurrence of protected species or habitat in the construction area. Sensitive areas will be considered avoidance areas. Prior to any construction activity, avoidance areas will be marked on the ground and maintained through the duration of the

Contract. The Applicant will remove markings during and following final inspection of the TWE Project.

- **TWE-34:** If evidence of a protected species not previously identified or known is found in the TWE Project area, the Contractor will immediately notify the appropriate land management agencies and provide the location and nature of the findings.

X3.1.3 Additional Mitigation Measures

The following additional mitigation measures were identified in the DEIS as mitigation measures to minimize impacts to plant and wildlife resources. The measures presented in Table X5 have not been finalized at this time and may be refined, changed, or eliminated based on information provided in the FEIS, BA/BO, BE, and continued agency consultation in the ROD POD and NTP POD versions of this Plan.

TABLE X5 ADDITIONAL MITIGATION MEASURES

DRAFT EIS MITIGATION MEASURE NUMBER	MITIGATION MEASURES
SS-1	(Species-specific Surveys for Federally-listed Species) – Site- and species-specific surveys for federally listed plant species would be conducted prior to the Biological Assessment (BA) to identify the precise location of known individuals and populations and ground-truth modeled habitats. Surveys would be conducted in areas identified as potential habitat through models developed for the EIS, or from agency provided models for specific species. Surveys would be conducted as described in the TWE Project Special Status Species Survey Plan, and subsequent Survey Plan Memos. Species not requiring surveys prior to the BA would be identified by the USFWS and BLM. For these species, pre-construction surveys would still be required. If individuals or populations are identified during surveys in potential habitat areas, species-specific avoidance through structure and ROW design modifications would be developed and implemented. For species that cannot be avoided, species specific mitigation would need to be developed in consultation with the USFWS and BLM. Species specific mitigation may include compensatory mitigation, and transplanting of individuals.
SS-2	(Species-specific Surveys for Forest Sensitive) – Site- and species-specific surveys for USFS sensitive plant species would be conducted prior to the Biological Evaluation (BE) to identify the precise location of known individuals and populations and ground-truth modeled habitats. Surveys would be conducted in areas identified as potential habitat through models developed for the EIS, or from agency provided models for specific species. Surveys for USFS sensitive species would be conducted only in the national forests crossed by the proposed project. Surveys would be conducted as described in the TWE Project Special Status Species Survey Plan, and subsequent Survey Plan Memos. Species not requiring surveys prior to the BE would be identified by the USFS and BLM. For these species, pre-construction surveys would still be required. If individuals or populations are identified, species-specific avoidance through structure and ROW design modifications would be developed and implemented. If individuals or populations are identified during surveys in potential habitat areas, species-specific avoidance through structure and ROW design modifications would be developed and implemented. For species that cannot be avoided, species specific mitigation would need to be developed in consultation with the USFS and BLM. Species specific mitigation may include compensatory mitigation, and transplanting of individuals.
SS-3	(Species-specific Surveys for BLM Sensitive, NPS Sensitive, and Nevada State Protected Species) – Site- and species-specific surveys for BLM sensitive, NPS sensitive, and Nevada state-protected plant species would be conducted prior to construction it identify the precise location of known individuals and populations and ground-truth modeled habitats. Surveys would be described in the TWE Project Special Status Species Survey Plan and subsequent Survey Plan Memos. If individuals or populations are identified, species-specific avoidance through structure and ROW design modifications would be developed and implemented.

DRAFT EIS MITIGATION MEASURE NUMBER	MITIGATION MEASURES
SS-4	(Avoidance of Ute Ladies'-tresses Orchid Species and Habitat) – Known individuals and populations and areas identified as potential habitat through consultation with the USFWS would be spanned by the transmission line. Surface disturbance associated with facilities, access roads, and other project related construction activities would not occur within the areas identified potential habitat or as having known occurrences. Presence of species in modeled habitat would be assumed for USFWS mitigation purposes. If potential habitat cannot be avoided, 2 years of surveys in potential habitat would be required, and USFWS formal consultation may be necessary.
SS-5	Construction will occur down slope of special status plants and populations where feasible; if surface disturbance must be sited upslope, a 300 ft minimum buffer between surface disturbances and plants and populations will be incorporated. Erosion control would be implemented at the direction of the BLM, USFS, or USFWS, as appropriate, to prevent sedimentation and erosion from upslope surface disturbance.
SS-6	A minimum 300-foot buffer distance would be incorporated between federally listed individuals and populations and surface disturbance. Avoidance areas will be visible during construction through fencing, signing, rebar, etc. during construction. Construction and operation traffic will stay on designed routes, and other cleared or approved areas.
SS-7	The Dust Control and Air Quality plan will include dust abatement measures to minimize impacts to special status plant species; including slower speed limits on unpaved roads, using gravel for roads in occupied habitat and avoidance areas, and the application of water for dust abatement.
SS-8	(Avoidance of Deseret Milk vetch Species and Habitat) – Known individuals and populations and areas identified as ground-truthed suitable habitat would be spanned by the transmission line. Surface disturbance associated with facilities, access roads, and other project related construction activities would not occur within the areas identified as having known occurrences or suitable habitat. Presence of species would be assumed for development of USFWS conservation measures as appropriate.
SS-9	(Avoidance of Clay Phacelia and Minimization of Indirect Impacts) – Known individuals and populations would be spanned by the transmission line. Surface disturbance associated with facilities, access roads, and other project-related construction activities would not occur within the areas identified as having known occurrences or suitable habitat. Additional site specific erosion control measures would be developed with the USFWS and implemented during construction to minimize erosion in areas near known clay phacelia populations.
SS-10	(Avoidance of High Quality Habitats) - In instances where complete habitat avoidance is not possible (due to, for example, topographical, biological, or engineering constraints), all "high quality" habitats as determined during site- and species-specific surveys would be avoided by all direct disturbances during construction and operational activities. High quality habitat are defined as areas that are within the geographic range of the species, have been field verified as having the majority of required habitat characteristics; and/or the species has been observed in the area or near vicinity.
SS-11	(Uinta Basin Hookless Cactus Core Conservation Area Mitigation Measures) - Construction within Uinta Basin Hookless Cactus Level 1 and Level 2 Core Conservation areas will follow the Draft Energy Development Management Guidelines for *Sclerocactus wetlandicus* and *Sclerocactus brevispinus* Core Conservation Areas as appropriate. These include limited to no surface disturbance in core conservation areas; and having an on-site botanist during construction activities. If these measures are not implemented, mitigation measures will need to be developed in consultation with the BLM and USFWS.
Wildlife	
WLF-1	For the protection of breeding migratory birds, WLF-1 requires TransWest to avoid migratory bird habitat removal on currently undisturbed lands, to the extent possible, between approximately February 1 and July 31 (depends on state) or, alternately, to conduct breeding migratory bird surveys and implemented appropriate mitigation in coordination with the BLM, U.S. Bureau of Reclamation, CPW, Nevada Department of Wildlife (NDOW), UDWR, USFWS, Western Area

DRAFT EIS MITIGATION MEASURE NUMBER	MITIGATION MEASURES
	Power Administration (Western), and WGFD. In addition, in order to avoid impacts to raptors during the breeding season (January 1 to August 31 for most eagles, hawks, falcons, and owls and April 15 to September 15 for burrowing owls), TransWest would be required to conduct a breeding raptor survey and implement appropriate mitigation measures, such as buffer zones around active nests, as needed.
Special Status Wildlife Species	
SSWS-1	In order to protect nesting mountain plovers, Trans West would follow the USFWS 2002 Mountain Plover Survey Guidelines and would conduct mountain plover nest surveys if construction were to occur during the mountain plover breeding seasons (April 10 to July 10). If a nest is located, a 0.25 mile protection buffer would be implemented around the active nest until the birds fledge from the nest.
SSWS-2	Prior to construction activities in suitable pygmy rabbit habitat, TransWest would conduct presence/absence surveys following appropriate protocols. Areas within 0.5 mile of proposed disturbance that show characteristics of pygmy rabbits occur, the "Habitat Preservation and Restoration" conservation measures would apply (Keinath and McGee 2004).
SSWS-3	Prior to construction activities in suitable Wyoming pocket gopher habitat, TransWest would conduct presence/absence surveys following appropriate protocols. If active pocket gopher mounds are identified, the proposed surface disturbing activities would avoid the active pocket gopher mounds by 75 meters (BLM 2009). If avoidance of the active pocket gopher mounds by 75 m is not possible, classification surveys (via live capture) must be completed to identify the pocket gopher responsible for the mounds to the species level. If the results conclude that the Wyoming pocket gopher is responsible for the mounds, the "Occupies Wyoming Pocket Gopher Habitat Protection Measures" would apply (BLM 2009). If the results conclude that the associated species is a northern pocket gopher, then the proposed surface disturbance may proceed without mitigation. If the classification survey fails to conclusively identify the associated pocket gopher to the species level, then it will be assumed that the species is a Wyoming pocket gopher and the "Occupied Wyoming Pocket Gopher Habitat Protection Measures" will apply (BLM 2009).
SSWS-4	To avoid and minimize impacts to the desert tortoise and its habitat, TransWest would conduct field surveys in identified desert tortoise habitat following approved USFWS protocols. TransWest would coordinate with the BLM, Western, Boulder City, Clark County, Nevada, Bureau of Reclamation, and USFWS to implement appropriate mitigation measures during construction, including but limited to, fencing, pre-construction surveys, and relocating desert tortoises.
SSWS-5	To reduce impacts to greater sage-grouse from operation of the proposed Project, several design features specific to sage-grouse would be implemented. To limit raptor and corvid predation on greater sage-grouse, TransWest would be required to construction anti-perching devices on segments of the proposed Project near high quality greater sage-grouse habitat (e.g., within 4 miles of occupied/active leks, within core areas, and within PPH) in consultation with the BLM, Western, and applicable state wildlife agencies. To limit the potential for greater sage-grouse collisions with guy wires, TransWest would be required to outfit guy wires with agency approved bird diverters within high quality greater sage-grouse habitat, or alternatively, to construct alternative structures such as self-supporting steel lattice structures or self-supporting tubular H-frame structures instead of guyed lattice structures within greater sage-grouse habitat.
SSWS-5A*	Within 4 miles of leks located within occupied habitat, stipulations would be applied to ROWs. Within 4 miles of a lek in occupied habitat, ROWs would be excluded. Within 4 miles of a lek, but outside occupied habitat, ROWs would be avoided (noise/tall structures); • The activity meets noise restriction (noise at occupied leks does not exceed 10 decibels above ambient sound levels at sunrise during breeding season); • The activity meets permanent (structure persists through subsequent breeding season) tall structure restrictions (e.g., the structure is not visible from the lek); and • Environmental compliance documents associated with the activity consider how to limit habitat

DRAFT EIS MITIGATION MEASURE NUMBER	MITIGATION MEASURES
	fragmentation (regardless of the GRSG seasonal habitat). Exceptions to the seasonal restriction and use restrictions could be granted under the following conditions: • If surveys determine that the lek is not active that year, and the proposed activity will not take place beyond the season being excepted; • If surveys determine that the lek is no longer occupied, and the proposed activity will not take place beyond the season being excepted; • Is the project plan and NEPA document demonstrate that impacts from the proposed action can be adequately mitigated.
SSWS-6	To prevent impacts to the western yellow-billed cuckoo during the breeding season, TransWest would avoid construction within potentially suitable habitat from March 15 to October 15, or, alternatively, would conduct breeding western yellow-billed cuckoo surveys and implement appropriate mitigation in coordination with the BLM, Western, USFWS, and applicable state wildlife agencies.
SSWS-7	To reduce impacts to Utah prairie dogs, TransWest would be required to conduct a preliminary habitat assessment along portions of the proposed Project that is within historic Utah prairie dog habitat. Based on the results of the habitat survey, additional surveys may be required by the USFWS to determine whether occupied habitat occurs within the disturbance footprint of the proposed Project. If occupied habitat is found, appropriate mitigation measures such as reroutes, reducing the width of the ROW, and constructing alternative structure types (e.g. H-frame tubular) with anti-perching devices on transmission line segments within occupied habitat, would be implemented in coordination with the BLM, Western, UDWR, and USFWS.
SSWS-8	To prevent impacts to southwestern willow flycatchers during the breeding season, TransWest would avoid construction within suitable habitat from March 15 to October 15, or, alternatively, conduct breeding southwestern willow flycatcher surveys and implement appropriate mitigation in coordination with the BLM, Western, USFWS, and applicable state wildlife agencies.
SSWS-9	To reduce impacts to black-footed ferret from operation of the proposed Project, several design features specific to black-footed ferret would be implemented. To limit raptor predation on black-footed ferret, TransWest would be required to construct anti-perching devices and alternative structure types on segments of the proposed Project near high quality black-footed ferret habitat (e.g., within areas of active white-tailed prairie dog colonies) in consultation with the BLM, Western, and applicable state wildlife agencies.
SSWS-10*	To reduce impacts to Mexican spotted owl in Utah, TransWest will ensure that; • No action will occur within 0.5 mile of an identified nest site; • If nest site activity status is unknown, no activity will occur within the designated Protect Activity Center (PAC); • Avoid placing permanent structures within 0.5 mil of suitable habitat unless surveyed and not occupied; • Reduce noise emissions (e.g., use hospital-grade mufflers) to 45 dBA at 0.5 mile from suitable habitat, including canyon rims (Delaney et. Al. 1997). Placement of permanent noise-generating facilities should be determined by a noise analysis to ensure noise does not encroach upon a 0.5 mile buffer for suitable habitat, including canyon rims; • Limit disturbances to and within suitable owl habitat by staying on designated routes; and • Limit new access routes created by the project. A permanent action continues for more than one breeding season and/or causes a loss of owl habitat or displaces owls through disturbances, i.e., creation of a permanent structure. For all temporary actions that may impact owls or suitable habitat: • If action occurs entirely outside of the owl breeding season, and leaves no permanent structure or permanent habitat disturbance, action can proceed without an occupancy survey; • If action will occur during a breeding season, survey for owls prior to commencing activity. If owls are found, activity should be delayed until outside of the breeding season; and

DRAFT EIS MITIGATION MEASURE NUMBER	MITIGATION MEASURES
	• Eliminate access routes created by a project through such means as raking out scars, re-vegetation, gating access points, etc. (Temporary activities are defined as those that are completed prior to the start of the following raptor breeding season, leaving no permanent structures and resulting in no permanent habitat loss)
SSWS-11	To reduce impacts to Canada lynx, TransWest would: • Limit disturbance to and within suitable habitat by staying on approved access routes. • Limit new access routes created by the project. • Dirt and gravel roads traversing lynx habitat (particularly those that could become highways) should not be paved or otherwise upgraded (e.g. straightening of curves, widening of roadway, etc.) in a manner that is likely to lead to significant increase in traffic volume, traffic speed, increased width of the cleared ROW, or would foreseeable contribute to development or increases in human activity in lynx habitat. • When these types of upgrades are proposed, a thorough analysis of potential direct and indirect impacts to lynx and lynx habitat should be conducted. • Minimize impacts to habitats that support lynx prey.
Aquatic Biological Resources	
AB-1	(Fish Passage): When avoidance of perennial streams with fish populations is not feasible and a culvert is required during construction, flow would be maintained in a portion of the stream to allow unrestricted fish passage. Any plan for dewatering the stream at the culvert site must be approved by the appropriate federal and state agencies. Culvert size and type would be selected to facilitate the continued and long-term connectivity and movement of target aquatic species. If the culvert is proposed to be in place during project operation, approval must be obtained from the federal or state agency management authority. An alternative crossing method may be required.
AB-2	(Avoid Game Fish Spawning Periods): If spawning areas for game fish species are known to occur at streams proposed for vehicle crossing or culvert construction, instream disturbance would be scheduled to avoid the spawning period. The exact dates for avoidance would be determined through discussions with WGFD, CPWD, or UDWR. All disturbed areas would be restored to pre-construction conditions prior to the next spawning season.
AB-3	(Invasive Aquatic Species Protection): It is assumed that any waterbody could contain aquatic invasive weed species. If work occurs in or near a waterbody, all equipment would be decontaminated. Decontamination would occur before arrival at a project site to avoid the transfer of aquatic invasive species from a previous work site in or near water. Decontamination would consist of either of these actions: 1) Drain all water from equipment and compartments; clean equipment of all mud, plants, debris, and aquatic organisms; and dry equipment for specified time by season (5 days in June through August, 18 days in March through May, and 3 days in December through February when temperatures are at or below freezing); or 2) Use a high pressure (2,500 psi) hot water (140°F) pressure washer to thoroughly clean equipment and flush all compartments that may hold water. A field monitor would be present to ensure that the cleaning was completed prior to vehicle and equipment moving to other streams and drainages.
AB-4	(Herbicide Use Plan): As part of vegetation management, the applicant would prepare an Herbicide Use Plan. The Plan would identify a list of approved herbicides that may be used as well as locations of areas that may be treated. Licensed herbicide applicators would be used in the treatment process. All herbicides would be used in accordance with label instructions for the chemical. The Plan also would discuss compliance with applicable federal, state, and local agencies.
Special Status Aquatic Species	
SSS-1	(Water Use): No new surface water or groundwater withdrawals that are hydrologically connected to streams containing Colorado River cutthroat trout and Bonneville cutthroat trout would be allowed. Any water necessary for construction, operation, or maintenance (including dust

DRAFT EIS MITIGATION MEASURE NUMBER	MITIGATION MEASURES
	abatement) would not be acquired from existing water sources.
SSS-2	(No Permanent Structures or New Roads in Critical Habitat for Federally Listed Fish Species): No permanent structures or new roads would be constructed in critical habitat for federally endangered fish species. Any temporary disturbance to soils in the 100-year floodplain within critical habitat would be minimized to the extent possible and restoration would be completed to maintain existing conditions.
SSS-3	(Avoid Spawning Habitat Disturbance for Special Status Trout Species): If spawning areas for Colorado River cutthroat trout are known to occur at streams proposed for vehicle crossing or culvert construction, instream disturbance would be scheduled to avoid the spawning period from April through May. The exact dates for avoidance would be determined through discussions with WGFD, CPW, or UDWR. All disturbed areas would be restored to pre-construction conditions prior to the next spawning season. The state agencies also would determine if a habitat survey would be required prior to any project disturbance, which would assist in defining habitat conditions for restoration.
SSS-4	(Avoid Spawning Habitat Disturbance for Southern Leatherside Chub): If spawning areas for southern leatherside chub are known to occur at streams proposed for vehicle crossing or culvert construction, instream disturbance would be scheduled to avoid the spawning period from April through June. The exact dates for avoidance would be determined through discussions with UDWR. All disturbed areas would be restored to pre-construction conditions prior to the next spawning season.
SSS-5	(Avoid Direct Disturbance to Habitat for Southern Bonneville Pyrg): No vehicle or equipment disturbance from ROW work or access road construction would be allowed within 300 feet of the unnamed spring located near Thistle Creek that contains southern Bonneville pyrg.
SSS-6	(Survey to Avoid Direct Disturbance to California Floater Habitat): If instream construction is proposed for Currant Creek, a survey would be conducted to determine if California floater is present. If the species is absent, construction would be allowed after meeting UDWR requirements for restoration. If the species is present, relocation would be considered to avoid impacts to it.
SSS-7	(Reduce Crossings of Sowers Creek to Protect Boreal Toad Breeding Habitat): The ROW alignment would be evaluated so that the number of Sowers Creek crossings can be reduced. The portion of the creek crossed by the ROW also would be evaluated as breeding habitat for boreal toad to identify any priority areas that should be avoided if possible.
SSS-8	(No Vehicle Crossings or New Roads in the Muddy River): No vehicle crossings or new roads would be construction for the Muddy River. This measure would protect habitat for special status fish species (Virgin River chub, Moapa speckled dace, Moapa White River springfish, Meadow Valley Wash desert sucker, and Meadow Valley Wash speckled dace) in the Muddy River.
SSS-9	(Avoid Direct Disturbance to Abe and Hiway Springs Used by Arizona Toad): No vehicle or equipment disturbance from ROW work or access road construction would be allowed in Abe and Hiway Springs to protect Arizona toad breeding habitat.

X3.1.4 Surveys

A survey plan identifying survey requirements for special-status species affected by the Project will be developed post-ROD. Survey information will be incorporated into the NTP POD and used in the final Project design to avoid and minimize impacts to special status species to the extent practicable. These surveys will inform the Construction Contractor(s) of locations for exclusion, avoidance, timing restrictions, or areas where construction may continue with no restriction.

X3.1.5 Monitoring and Reporting

Wildlife and plant monitoring may be required during construction along portions of the TWE Project area within designated habitat for special status species. Monitoring needs will be determined by presence or absence of special status species and/or viable habitat as determined by pre-construction surveys. The precise requirements for monitoring will be determined as part of the FEIS, BO, and through consultation with BLM, USFS, Reclamation, and state agencies and will be described in future versions of this Plan.

Monitors will likely be responsible for flagging or otherwise marking buffers around special status species areas. Exact methods of marking these areas will be determined through coordination with the Construction Contractor(s) to ensure all personnel know what the markings mean.

Biological Monitors may be required to document and spatially record all activities involving special status wildlife and plants. Their observations may be recorded in the Construction Data Management System. A report may be developed and prepared for TransWest and agencies on a regular basis. Exact frequency will be developed through future agency coordination. At a minimum, reports may include dates of activity, which species' habitats were impacted, which species were encountered, details of encounters (date, location, what occurred in the encounter), and what areas were avoided and by what means.