Exhibit H3 –
Visual Simulations

Existing Condition – View looking south from the Cedar Mountain Overlook toward the San Rafael Swell, Buckhorn Flat, and the Old Spanish NHT with an existing 345kV transmission line crossing BLM VRM Class III lands

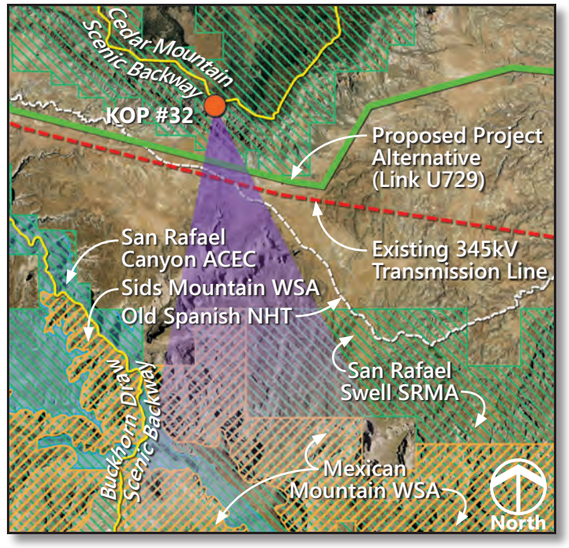

View Location: Approximate distance to proposed transmission line from photo location is 1.0 mile.

Simulated Condition – View of Alternative COUT BAX-B

500kV TOWER STRUCTURE DIAGRAM

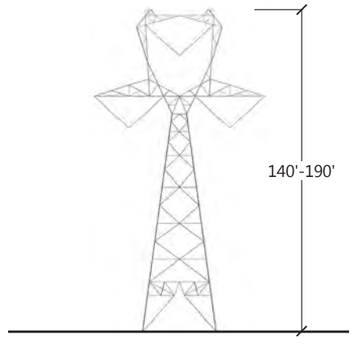

Typical single-circuit 500kV dull-galvanized self-supporting lattice tangent transmission tower

Tower heights shown in simulation vary between 160' and 180'

Draft EIS and LUPAs for the Energy Gateway South Transmission Project

KOP #32a – Cedar Mountain Overlook

Photo Date and Time: July 26, 2012, 8:25 a.m. Focal Length: 50mm

Simulations were prepared using three-dimensional tower models provided by Rocky Mountain Power. Typical towers would range between 140 to 190 feet above ground with a span of 1,200 feet. Tower locations and heights may differ based on final engineering and design.

DRAFT

February 2014

Existing Condition – View looking south from the Cedar Mountain Overlook toward the San Rafael Swell, Buckhorn Flat, and the Old Spanish NHT with an existing 345kV transmission line crossing BLM VRM Class III lands

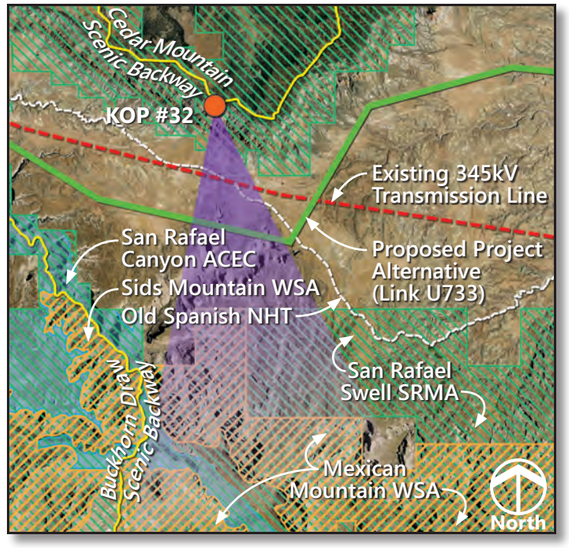

View Location: Approximate distance to proposed transmission line from photo location is 2.2 miles.

Simulated Condition – View of Alternative COUT BAX-C

500kV TOWER STRUCTURE DIAGRAM

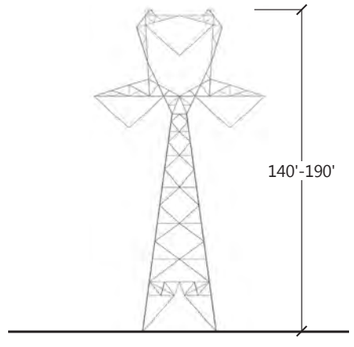

Typical single-circuit 500kV dull-galvanized self-supporting lattice tangent transmission tower

Tower heights shown in simulation vary between 160' and 180'

Draft EIS and LUPAs for the Energy Gateway South Transmission Project

KOP #32b – Cedar Mountain Overlook

Photo Date and Time: July 26, 2012, 8:25 a.m. Focal Length: 50mm

Simulations were prepared using three-dimensional tower models provided by Rocky Mountain Power. Typical towers would range between 140 to 190 feet above ground with a span of 1,200 feet. Tower locations and heights may differ based on final engineering and design.

DRAFT

February 2014

Existing Condition – View looking south from the Cedar Mountain Overlook toward the San Rafael Swell, Buckhorn Flat, and the Old Spanish NHT with an existing 345kV transmission line crossing BLM VRM Class III lands

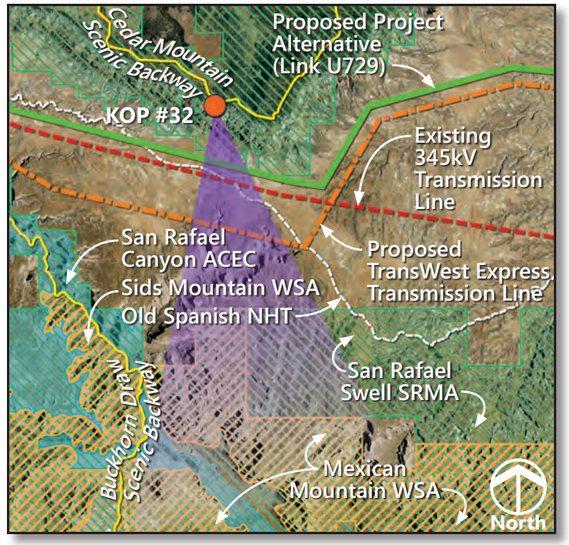

View Location: Approximate distance to proposed transmission line from photo location is 1.0 mile.

Simulated Condition – View of Alternative COUT BAX-B and the proposed TransWest Express transmission line

500kV TOWER STRUCTURE DIAGRAM

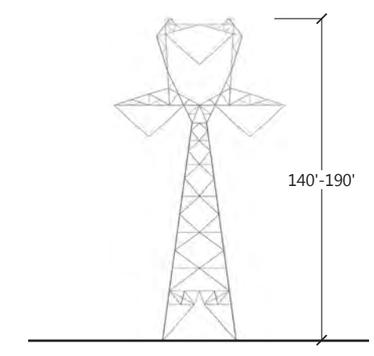

Typical single-circuit 500kV dull-galvanized self-supporting lattice tangent transmission tower

Tower heights shown in simulation vary between 160' and 180'

Draft EIS and LUPAs for the Energy Gateway South Transmission Project

Photo Date and Time: July 26, 2012, 8:25 a.m. Focal Length: 50mm

Energy Gateway South simulations were prepared using three-dimensional tower models provided by Rocky Mountain Power. Typical towers would range between 140 to 190 feet above ground with a span of 1,200 feet. Tower locations and heights may differ based on final engineering and design.

Cumulative effect simulations depicting the proposed TransWest Express project are conceptual and shown for reference only.

KOP #32a – Cedar Mountain Overlook
Cumulative Effects

DRAFT

February 2014

Existing Condition – View looking south from the Cedar Mountain Overlook toward the San Rafael Swell, Buckhorn Flat, and the Old Spanish NHT with an existing 345kV transmission line crossing BLM VRM Class III lands

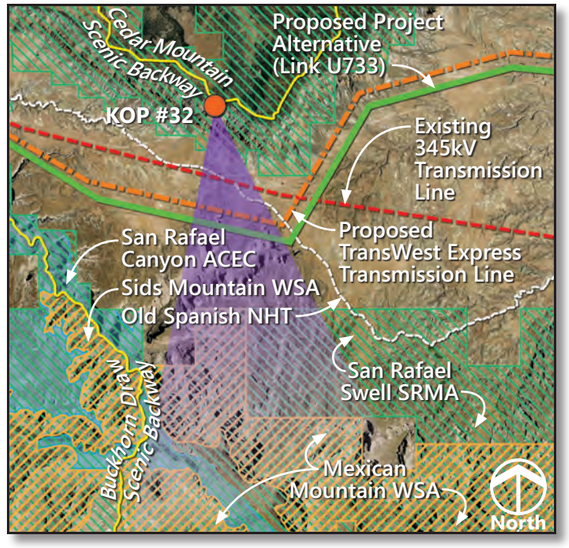

View Location: Approximate distance to proposed transmission line from photo location is 2.2 miles.

Simulated Condition – View of Alternative COUT BAX-C and the proposed TransWest Express transmission line

500kV TOWER STRUCTURE DIAGRAM

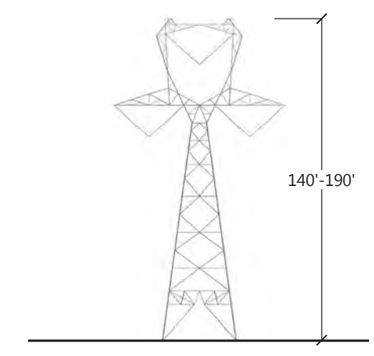

Typical single-circuit 500kV dull-galvanized self-supporting lattice tangent transmission tower

Tower heights shown in simulation vary between 160' and 180'

Draft EIS and LUPAs for the Energy Gateway South Transmission Project

Photo Date and Time: July 26, 2012, 8:25 a.m. Focal Length: 50mm

Energy Gateway South simulations were prepared using three-dimensional tower models provided by Rocky Mountain Power. Typical towers would range between 140 to 190 feet above ground with a span of 1,200 feet. Tower locations and heights may differ based on final engineering and design.

Cumulative effect simulations depicting the proposed TransWest Express project are conceptual and shown for reference only.

KOP #32b – Cedar Mountain Overlook
Cumulative Effects

DRAFT

February 2014

Existing Condition – View looking southeast from the Dinosaur Diamond Scenic Byway (U.S. Highway 6) at the intersection of the Green River Cutoff Road toward Mount Elliot and the Book Cliffs

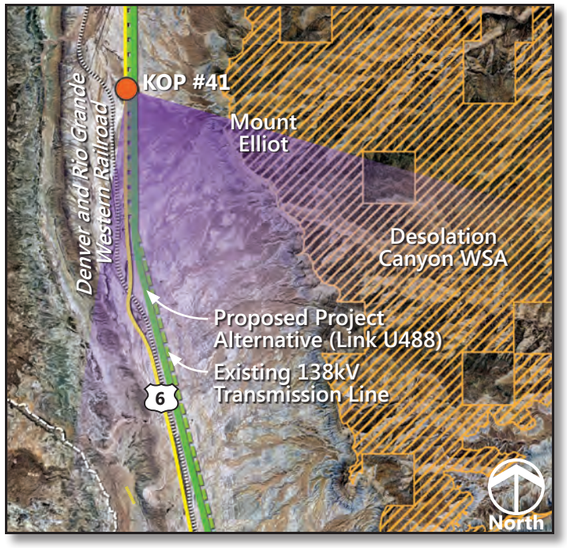

View Location: The proposed transmission line would be located adjacent to the photo location.

Simulated Condition – View of Alternatives COUT BAX-C and COUT BAX-E

500kV TOWER STRUCTURE DIAGRAM

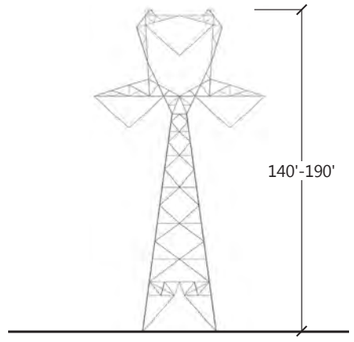

Typical single-circuit 500kV dull-galvanized self-supporting lattice tangent transmission tower

Tower heights shown in simulation vary between 160' and 180'

Draft EIS and LUPAs for the Energy Gateway South Transmission Project

KOP #41 – Dinosaur Diamond Scenic Byway (US 6)

Photo Date and Time: October 4, 2011, 4:03 p.m. Focal Length: 50mm
(The original photographs were taken at 50mm, then stitched together to create this panorama, resulting in a 59-degree field of view)

Simulations were prepared using three-dimensional tower models provided by Rocky Mountain Power. Typical towers would range between 140 to 190 feet above ground with a span of 1,200 feet. Tower locations and heights may differ based on final engineering and design.

DRAFT

February 2014

Existing Condition – View looking northeast from residences southwest of Craig, Colorado

Simulated Condition – View of Alternative WYCO-D (and route variation)[1]

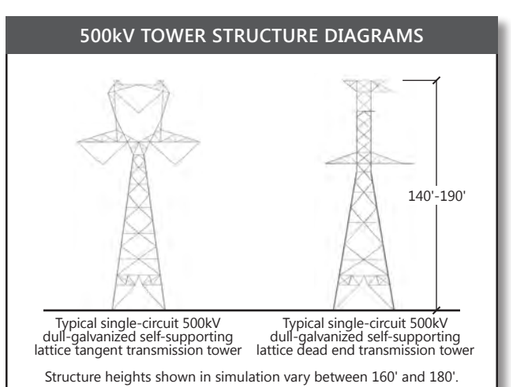

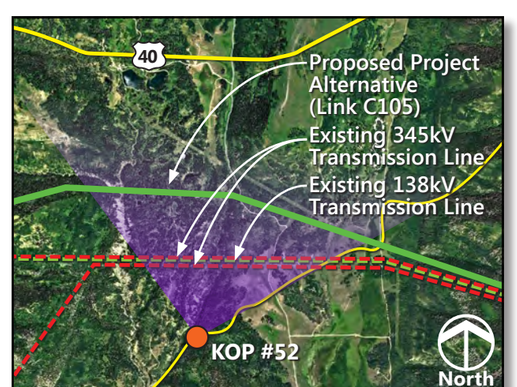

Simulations were prepared using three-dimensional tower models provided by Rocky Mountain Power. Typical towers would range between 140 to 190 feet above ground with a span of 1,200 feet. Tower locations and heights may differ based on final engineering and design.

View Location:
Approximate distance to proposed transmission line from photo location is 1.1 miles.

[1]Note: This view is in vicinity of Series Compensation Station Siting Area D – Bell Rock. Based on the final location, this facility may be visible and result in stronger visual contrast from this viewpoint.

Photo Date and Time: September 27, 2011, 9:05 a.m. Focal Length: 50mm (The original photographs were taken at 50mm, then stitched together to create this panorama, resulting in a 100-degree field of view)

Draft EIS and LUPAs for the Energy Gateway South Transmission Project

KOP #52 – Dispersed Residences southwest of Craig

DRAFT

February 2014

Existing Condition – View looking northeast from residences southwest of Craig, Colorado

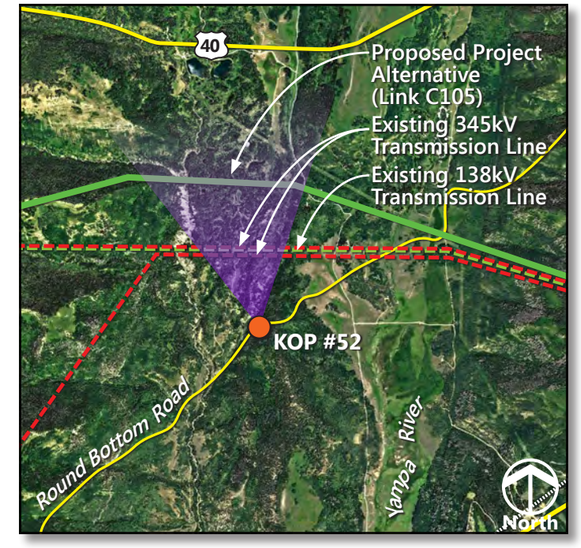

View Location: Approximate distance of proposed transmission line from photo location is 1.1 miles.

Simulated Condition – View of Alternative WYCO-D (and route variation)[1]

500kV TOWER STRUCTURE DIAGRAMS

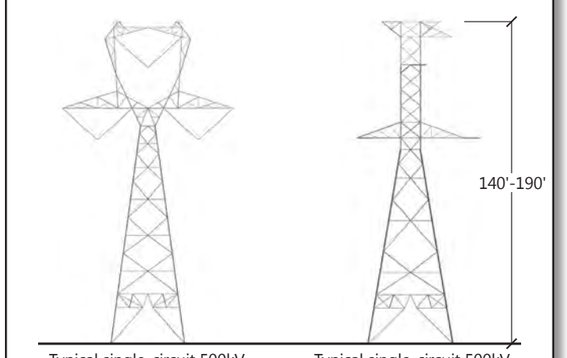

Typical single-circuit 500kV dull-galvanized self-supporting lattice tangent transmission tower

Typical single-circuit 500kV dull-galvanized self-supporting lattice deadend transmission tower

Tower heights shown in simulation vary between 160' and 180'

[1]Note: This view is in vicinity of Series Compensation Station Siting Area D – Bell Rock. Based on the final location, this facility may be visible and result in stronger visual contrast from this viewpoint.

Photo Date and Time: September 27, 2011, 9:05 a.m. Focal Length: 50mm
(The original photographs were taken at 50mm, then stitched together to create this panorama, resulting in a 44-degree field of view)

Simulations were prepared using three-dimensional tower models provided by Rocky Mountain Power. Typical towers would range between 140 to 190 feet above ground with a span of 1,200 feet. Tower locations and heights may differ based on final engineering and design.

Draft EIS and LUPAs for the Energy Gateway South Transmission Project

KOP #52 – Dispersed Residences southwest of Craig ~View A~

DRAFT

February 2014

Existing Condition – View looking northeast from residences southwest of Craig, Colorado

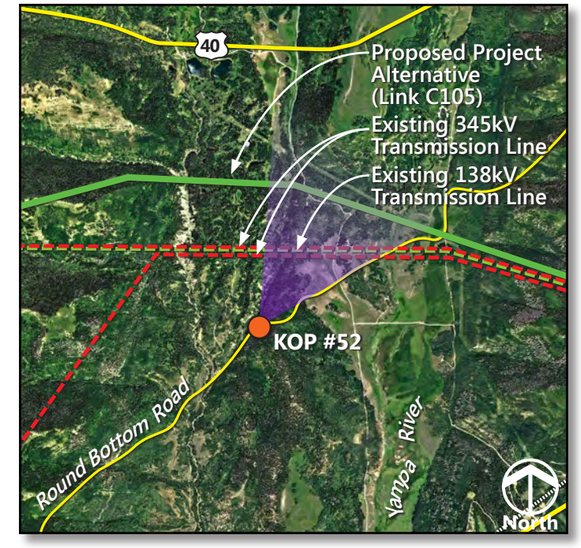

View Location: Approximate distance of proposed transmission line from photo location is 1.1 miles.

Simulated Condition – View of Alternative WYCO-D (and route variation)[1]

500kV TOWER STRUCTURE DIAGRAMS

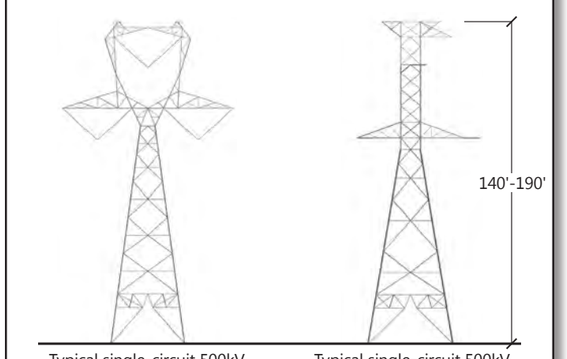

Typical single-circuit 500kV dull-galvanized self-supporting lattice tangent transmission tower

Typical single-circuit 500kV dull-galvanized self-supporting lattice deadend transmission tower

Tower heights shown in simulation vary between 160' and 180'

[1]Note: This view is in vicinity of Series Compensation Station Siting Area D – Bell Rock. Based on the final location, this facility may be visible and result in stronger visual contrast from this viewpoint.

Photo Date and Time: September 27, 2011, 9:05 a.m. Focal Length: 50mm
(The original photographs were taken at 50mm, then stitched together to create this panorama, resulting in a 54-degree field of view)

Simulations were prepared using three-dimensional tower models provided by Rocky Mountain Power. Typical towers would range between 140 to 190 feet above ground with a span of 1,200 feet. Tower locations and heights may differ based on final engineering and design.

Draft EIS and LUPAs for the Energy Gateway South Transmission Project

KOP #52 – Dispersed Residences southwest of Craig ~View B~

DRAFT

February 2014

Existing Condition – View looking east from residences adjacent to Colorado State Highway 13, approximately 20 miles north of Craig

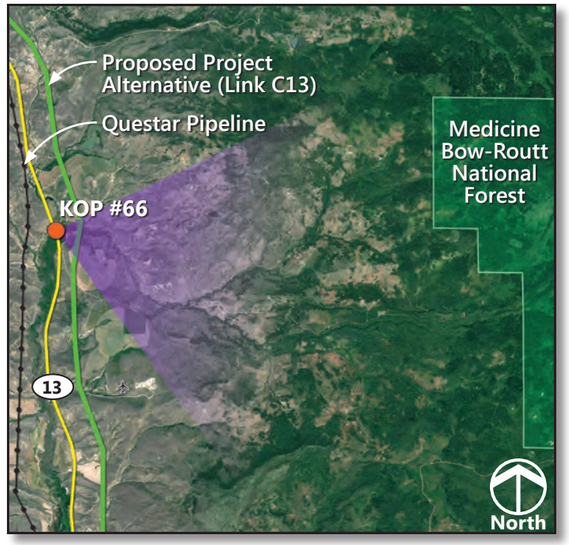

View Location: Approximate distance to proposed transmission line from photo location is 0.3 mile.

Simulated Condition – View of Alternative WYCO-D (and route variation)

500kV TOWER STRUCTURE DIAGRAM

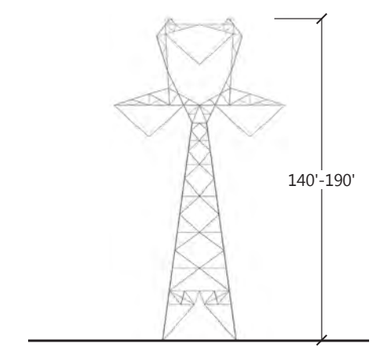

Typical single-circuit 500kV dull-galvanized self-supporting lattice tangent transmission tower

Tower heights shown in simulation vary between 160' and 180'

Photo Date and Time: September 27, 2011, 2:14 p.m. Focal Length: 50mm
(The original photographs were taken at 50mm, then stitched together to create this panorama, resulting in a 73-degree field of view)

Simulations were prepared using three-dimensional tower models provided by Rocky Mountain Power. Typical towers would range between 140 to 190 feet above ground with a span of 1,200 feet. Tower locations and heights may differ based on final engineering and design.

Draft EIS and LUPAs for the Energy Gateway South Transmission Project

KOP #66 – Dispersed Residences along Colorado State Highway 13

DRAFT

February 2014

Existing Condition – View looking south from the Enron Recreation Area on the White River toward BLM VRM Class III lands

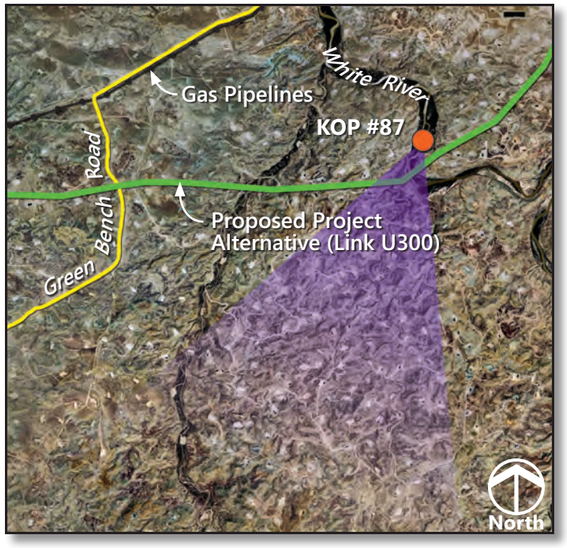

View Location: Approximate distance to proposed transmission line from photo location is 0.2 mile.

Simulated Condition – View of Alternatives COUT-C (and route variations), COUT-H, and COUT-I

500kV TOWER STRUCTURE DIAGRAM

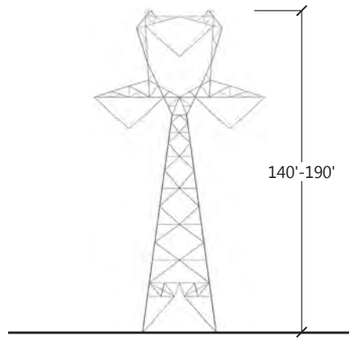

Typical single-circuit 500kV dull-galvanized self-supporting lattice tangent transmission tower

Tower heights shown in simulation vary between 160' and 180'

Draft EIS and LUPAs for the Energy Gateway South Transmission Project

KOP #87 – Enron Recreation Area (on White River)

Photo Date and Time: July 25, 2012, 10:10 a.m. Focal Length: 50mm
(The original photographs were taken at 50mm, then stitched together to create this panorama, resulting in a 54-degree field of view)

Simulations were prepared using three-dimensional tower models provided by Rocky Mountain Power. Typical towers would range between 140 to 190 feet above ground with a span of 1,200 feet. Tower locations and heights may differ based on final engineering and design.

DRAFT

February 2014

Existing Condition – View looking south from the Enron Recreation Area on the White River toward BLM VRM Class III lands

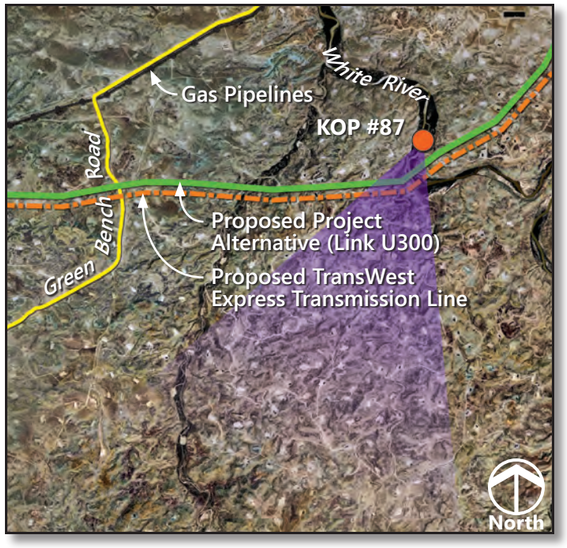

View Location: Approximate distance to proposed transmission line from photo location is 0.2 mile.

Simulated Condition – View of Alternatives COUT-C (and route variations), COUT-H, and COUT-I, and the proposed TransWest Express transmission line

500kV TOWER STRUCTURE DIAGRAM

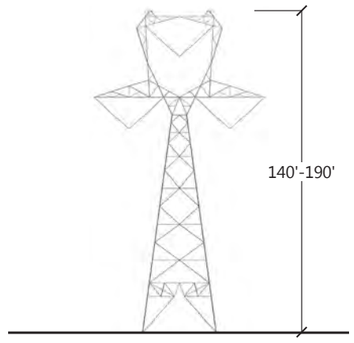

Typical single-circuit 500kV dull-galvanized self-supporting lattice tangent transmission tower

Tower heights shown in simulation vary between 160' and 180'

Draft EIS and LUPAs for the Energy Gateway South Transmission Project

Photo Date and Time: July 25, 2012, 10:10 a.m. Focal Length: 50mm
(The original photographs were taken at 50mm, then stitched together to create this panorama, resulting in a 54-degree field of view)

Energy Gateway South simulations were prepared using three-dimensional tower models provided by Rocky Mountain Power. Typical towers would range between 140 to 190 feet above ground with a span of 1,200 feet. Tower locations and heights may differ based on final engineering and design.

Cumulative effect simulations depicting the proposed TransWest Express project are conceptual and shown for reference only.

KOP #87 – Enron Recreation Area (on White River) Cumulative Effects

DRAFT

February 2014

Existing Condition – View looking south from dispersed residences south of Roosevelt, Utah.

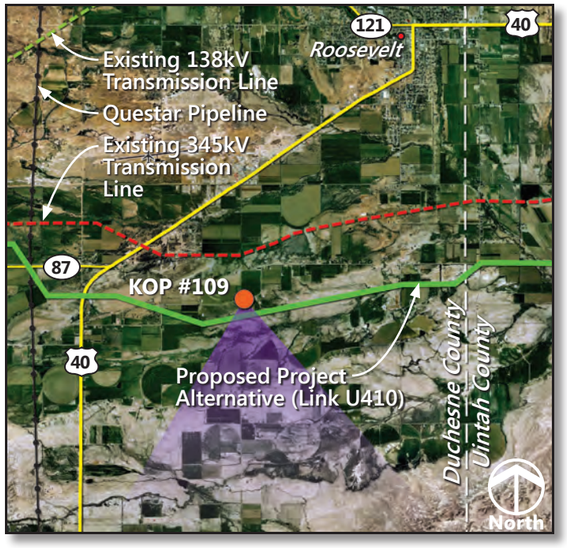

View Location: Approximate distance to proposed transmission line from photo location is 0.2 mile.

Simulated Condition – View of Alternatives COUT-A (and route variation) and COUT-B (and route variations)[1]

500kV TOWER STRUCTURE DIAGRAM

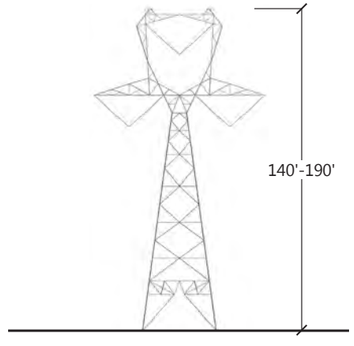

Typical single-circuit 500kV dull-galvanized self-supporting lattice tangent transmission tower

Tower heights shown in simulation vary between 160' and 180'

[1]Note: This view is in vicinity of Series Compensation Station Siting Area F – Roosevelt. Based on the final location, this facility may be visible and result in stronger visual contrast from this viewpoint.

Photo Date and Time: July 25, 2012, 12:53 p.m. Focal Length: 50mm
(The original photographs were taken at 50mm, then stitched together to create this panorama, resulting in a 72-degree field of view)

Simulations were prepared using three-dimensional tower models provided by Rocky Mountain Power. Typical towers would range between 140 to 190 feet above ground with a span of 1,200 feet. Tower locations and heights may differ based on final engineering and design.

Draft EIS and LUPAs for the Energy Gateway South Transmission Project

KOP #109 – Dispersed Residences south of Roosevelt

DRAFT

February 2014

Existing Condition – View looking northwest from the Harley Dome Rest Area Overlook adjacent to the Dinosaur Diamond Scenic Byway (Interstate 70) toward BLM VRM Class III lands

View Location: Approximate distance to proposed transmission line from photo location is 1.3 miles.

Simulated Condition – View of Alternatives COUT BAX-B, COUT BAX-C, and COUT BAX-E

500kV TOWER STRUCTURE DIAGRAM

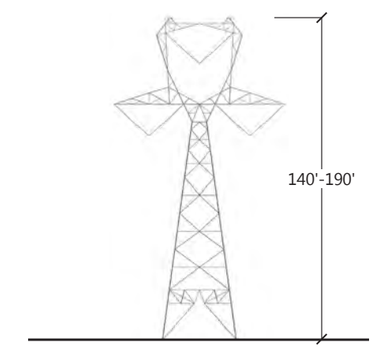

Typical single-circuit 500kV dull-galvanized self-supporting lattice tangent transmission tower

Tower heights shown in simulation vary between 160' and 180'

Draft EIS and LUPAs for the Energy Gateway South Transmission Project

KOP #152 – Interstate 70 Harley Dome Overlook (Dinosaur Diamond Scenic Byway)

Photo Date and Time: October 11, 2011, 3:31 p.m. Focal Length: 50mm
(The original photographs were taken at 50mm, then stitched together to create this panorama, resulting in a 61-degree field of view)

Simulations were prepared using three-dimensional tower models provided by Rocky Mountain Power. Typical towers would range between 140 to 190 feet above ground with a span of 1,200 feet. Tower locations and heights may differ based on final engineering and design.

DRAFT

February 2014

Existing Condition – View looking northwest from the Harley Dome Rest Area Overlook adjacent to the Dinosaur Diamond Scenic Byway (Interstate 70) toward BLM VRM Class III lands

View Location: Approximate distance to proposed transmission line from photo location is 1.3 miles.

Simulated Condition – View of Alternatives COUT BAX-B, COUT BAX-C, and COUT BAX-E, and the proposed TransWest Express transmission line

500kV TOWER STRUCTURE DIAGRAM

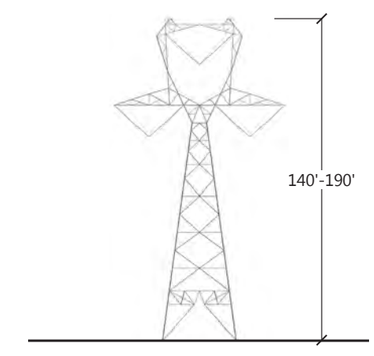

Typical single-circuit 500kV dull-galvanized self-supporting lattice tangent transmission tower

Tower heights shown in simulation vary between 160' and 180'

Photo Date and Time: October 11, 2011, 3:31 p.m. Focal Length: 50mm
(The original photographs were taken at 50mm, then stitched together to create this panorama, resulting in a 61-degree field of view)

Energy Gateway South simulations were prepared using three-dimensional tower models provided by Rocky Mountain Power. Typical towers would range between 140 to 190 feet above ground with a span of 1,200 feet. Tower locations and heights may differ based on final engineering and design.

Cumulative effect simulations depicting the proposed TransWest Express project are conceptual and shown for reference only.

Draft EIS and LUPAs for the Energy Gateway South Transmission Project

KOP #152 – Interstate 70 Harley Dome Overlook (Dinosaur Diamond Scenic Byway) Cumulative Effects

DRAFT

February 2014

Existing Condition – View looking northwest from the Crescent Junction Rest Stop on I-70, part of the Dinosaur Diamond Scenic Byway, toward the Book Cliffs and BLM VRM Class III lands

View Location: Approximate distance to proposed transmission line from photo location is 1.0 mile.

Simulated Condition – View of Alternatives COUT BAX-B, COUT BAX-C, and COUT BAX-E

500kV TOWER STRUCTURE DIAGRAM

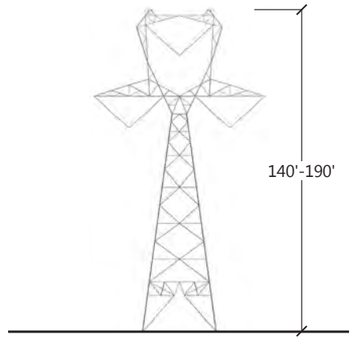

Typical single-circuit 500kV dull-galvanized self-supporting lattice tangent transmission tower

Tower heights shown in simulation vary between 160' and 180'

Draft EIS and LUPAs for the Energy Gateway South Transmission Project

Photo Date and Time: July 23, 2012, 2:06 p.m. Focal Length: 50mm
(The original photographs were taken at 50mm, then stitched together to create this panorama, resulting in a 42-degree field of view)

Simulations were prepared using three-dimensional tower models provided by Rocky Mountain Power. Typical towers would range between 140 to 190 feet above ground with a span of 1,200 feet. Tower locations and heights may differ based on final engineering and design.

KOP #193 – I-70 Crescent Junction Rest Stop

DRAFT

February 2014

Existing Condition – View looking northwest from the Crescent Junction Rest Stop on I-70, part of the Dinosaur Diamond Scenic byway, toward the Book Cliffs and BLM VRM Class III lands

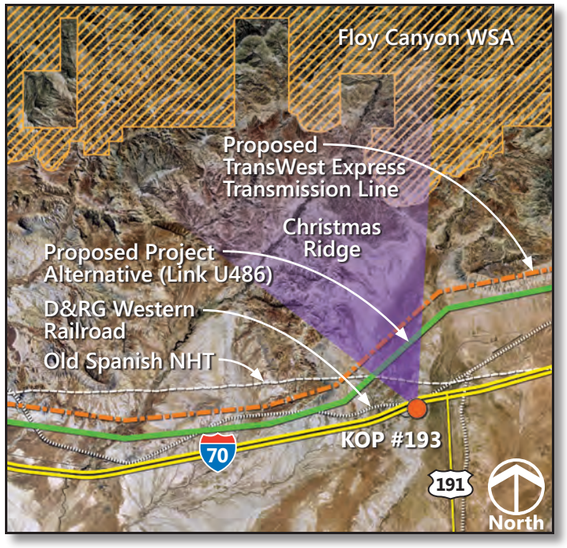

View Location: Approximate distance to proposed transmission line from photo location is 1.0 mile.

Simulated Condition – View of Alternatives COUT BAX-B, COUT BAX-C, and COUT BAX-E, and the proposed TransWest Express transmission line

500kV TOWER STRUCTURE DIAGRAM

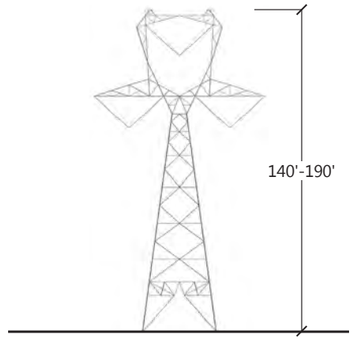

Typical single-circuit 500kV dull-galvanized self-supporting lattice tangent transmission tower

Tower heights shown in simulation vary between 160' and 180'

Draft EIS and LUPAs for the Energy Gateway South Transmission Project

Photo Date and Time: July 23, 2012, 2:06 p.m. Focal Length: 50mm
(The original photographs were taken at 50mm, then stitched together to create this panorama, resulting in a 42-degree field of view)

Energy Gateway South simulations were prepared using three-dimensional tower models provided by Rocky Mountain Power. Typical towers would range between 140 to 190 feet above ground with a span of 1,200 feet. Tower locations and heights may differ based on final engineering and design.

Cumulative effect simulations depicting the proposed TransWest Express project are conceptual and shown for reference only.

KOP #193 – I-70 Crescent Junction Rest Stop
Cumulative Effects

DRAFT

February 2014

Existing Condition – View looking southwest from Indian Creek Campground in the Manti-La Sal National Forest

Simulated Condition – View of Alternatives COUT BAX-B, COUT BAX-C, and COUT-I

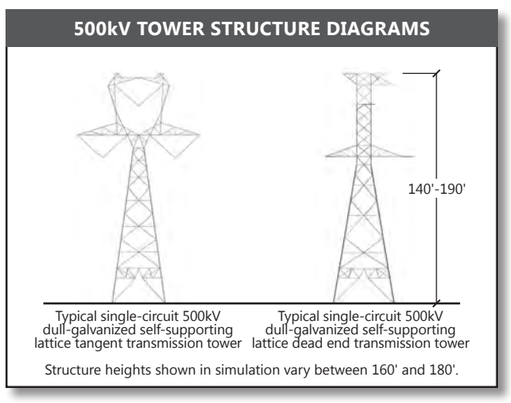

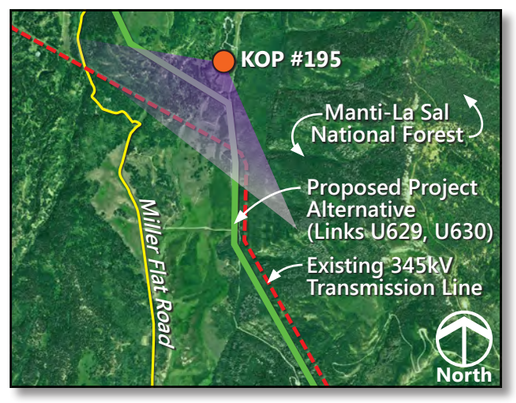

Simulations were prepared using three-dimensional tower models provided by Rocky Mountain Power. Typical towers would range between 140 to 190 feet above ground with a span of 1,200 feet. Tower locations and heights may differ based on final engineering and design.

View Location:
Approximate distance to proposed transmission line from photo location is 0.3 mile.

Photo Date and Time: September 27, 2011, 11:56 a.m. Focal Length: 50mm (The original photographs were taken at 50mm, then stitched together to create this panorama, resulting in a 135-degree field of view)

Draft EIS and LUPAs for the Energy Gateway South Transmission Project

KOP #195 – Indian Creek Campground

DRAFT

February 2014

Existing Condition – View looking southwest from Indian Creek Campground in the Manti-La Sal National Forest

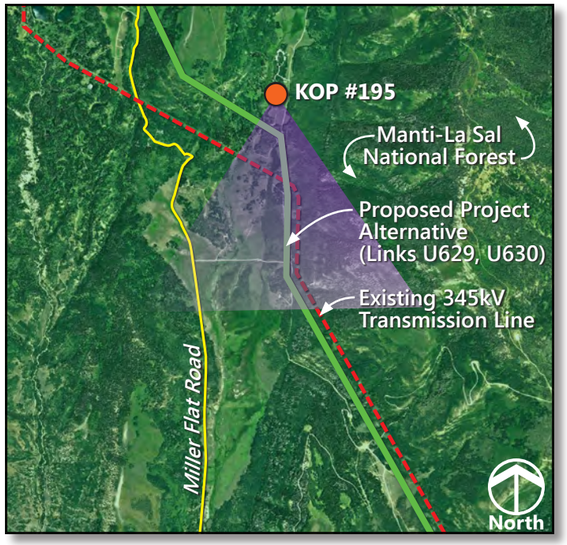

View Location: Approximate distance to proposed transmission line from photo location is 0.3 mile.

Simulated Condition – View of Alternatives COUT BAX-B, COUT BAX-C, and COUT-I

500kV TOWER STRUCTURE DIAGRAMS

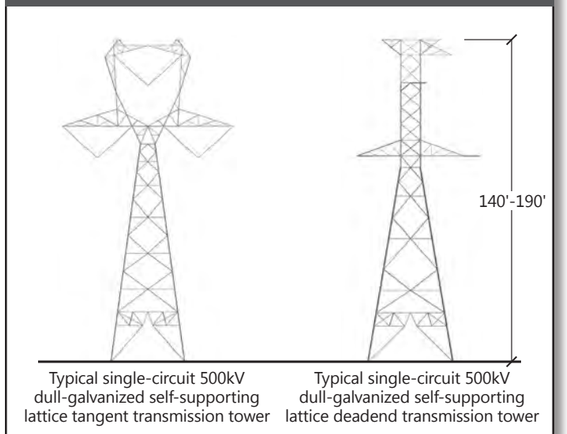

Draft EIS and LUPAs for the Energy Gateway South Transmission Project

KOP #195 – Indian Creek Campground
~View A~

Photo Date and Time: September 27, 2011, 11:56 a.m. Focal Length: 50mm
(The original photographs were taken at 50mm, then stitched together to create this panorama, resulting in a 78-degree field of view)

Simulations were prepared using three-dimensional tower models provided by Rocky Mountain Power. Typical towers would range between 140 to 190 feet above ground with a span of 1,200 feet. Tower locations and heights may differ based on final engineering and design.

DRAFT

February 2014

Existing Condition – View looking southwest from Indian Creek Campground in the Manti-La Sal National Forest

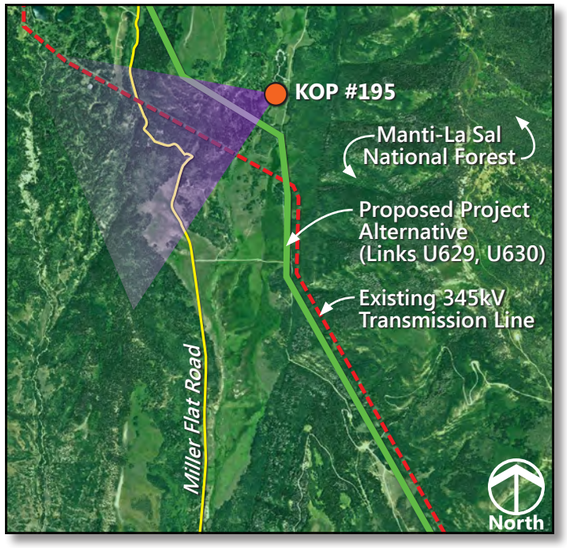

View Location: Approximate distance to proposed transmission line from photo location is 0.3 mile.

Simulated Condition – View of Alternatives COUT BAX-B, COUT BAX-C, and COUT-I

500kV TOWER STRUCTURE DIAGRAMS

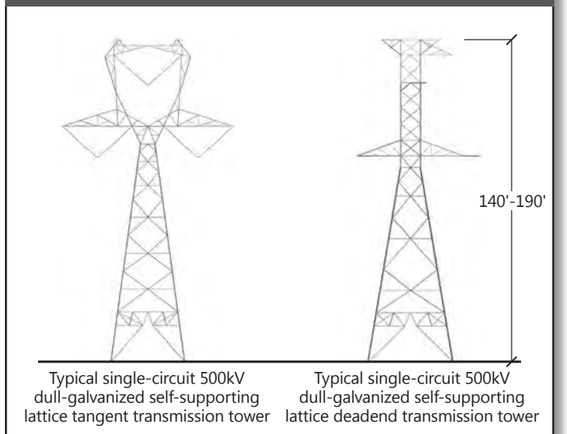

Draft EIS and LUPAs for the Energy Gateway South Transmission Project

KOP #195 – Indian Creek Campground
~View B~

Photo Date and Time: September 27, 2011, 11:56 a.m. Focal Length: 50mm
(The original photographs were taken at 50mm, then stitched together to create this panorama, resulting in a 78-degree field of view)

Simulations were prepared using three-dimensional tower models provided by Rocky Mountain Power. Typical towers would range between 140 to 190 feet above ground with a span of 1,200 feet. Tower locations and heights may differ based on final engineering and design.

DRAFT

February 2014

Existing Condition – View looking southwest from Indian Creek Campground in the Manti-La Sal National Forest

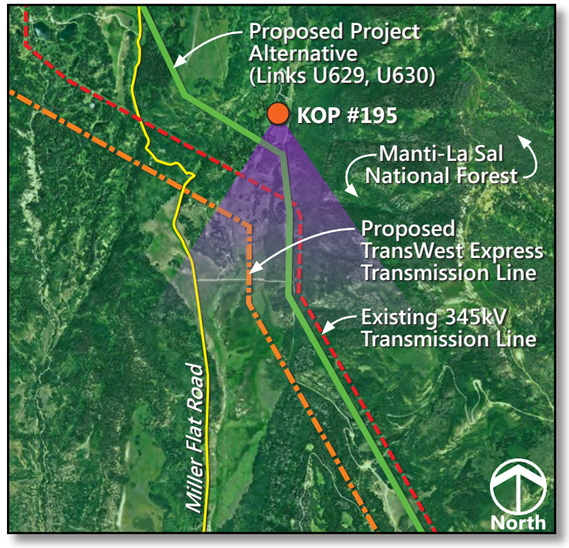

View Location: Approximate distance to proposed transmission line from photo location is 0.3 mile.

Simulated Condition – View of Alternatives COUT BAX-B, COUT BAX-C, and COUT-I, and the proposed TransWest Express transmission line

500kV TOWER STRUCTURE DIAGRAMS

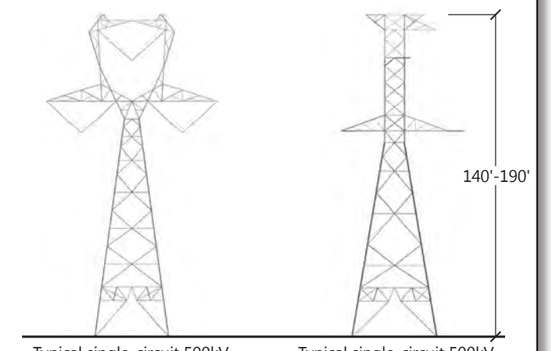

Typical single-circuit 500kV dull-galvanized self-supporting lattice tangent transmission tower

Typical single-circuit 500kV dull-galvanized self-supporting lattice deadend transmission tower

Tower heights shown in simulation vary between 160' and 180'

Draft EIS and LUPAs for the Energy Gateway South Transmission Project

Photo Date and Time: September 27, 2011, 11:56 a.m. Focal Length: 50mm
(The original photographs were taken at 50mm, then stitched together to create this panorama, resulting in a 78-degree field of view)

Energy Gateway South simulations were prepared using three-dimensional tower models provided by Rocky Mountain Power. Typical towers would range between 140 to 190 feet above ground with a span of 1,200 feet. Tower locations and heights may differ based on final engineering and design.

Cumulative effect simulations depicting the proposed TransWest Express project are conceptual and shown for reference only.

KOP #195 – Indian Creek Campground
~View A~
Cumulative Effects

DRAFT

February 2014

Existing Condition – View looking southwest from residences south of Hanna, Wyoming

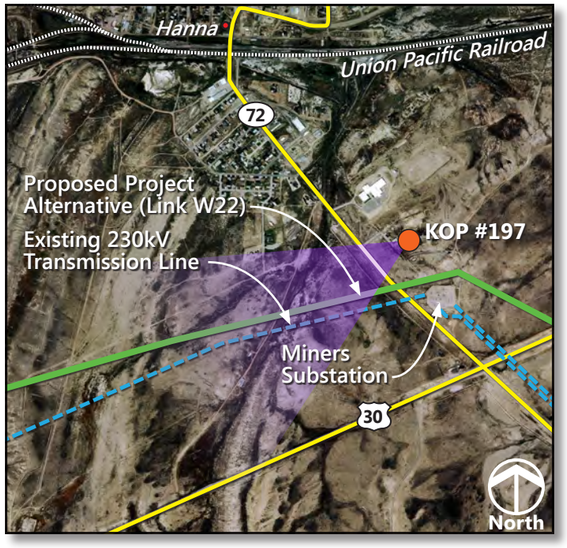

View Location: Approximate distance to proposed transmission line from photo location is 0.4 mile.

Simulated Condition – View of Alternative WYCO-D (and route variation)

500kV TOWER STRUCTURE DIAGRAMS

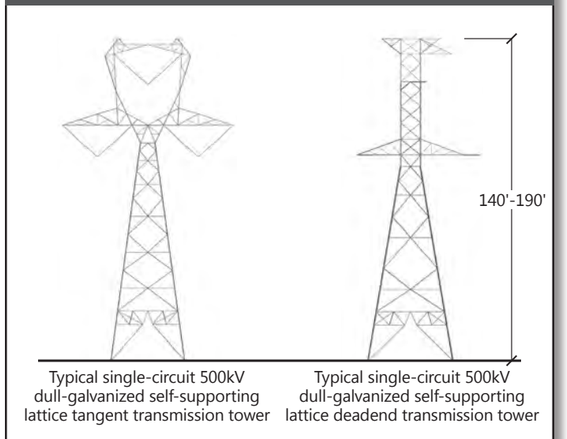

Draft EIS and LUPAs for the Energy Gateway South Transmission Project

Photo Date and Time: October 6, 2011, 9:01 a.m. Focal Length: 50mm
(The original photographs were taken at 50mm, then stitched together to create this panorama, resulting in a 50-degree field of view)

Simulations were prepared using three-dimensional tower models provided by Rocky Mountain Power. Typical towers would range between 140 to 190 feet above ground with a span of 1,200 feet. Tower locations and heights may differ based on final engineering and design.

KOP #197 – Hanna Residential

DRAFT

February 2014

Existing Condition – View looking east from Argyle Canyon Road toward BLM VRM Class II and Class III lands

View Location: The proposed transmission line would be located adjacent to the photo location.

Simulated Condition – View of Alternatives COUT-C (and route variations), COUT-H, and COUT-I

500kV TOWER STRUCTURE DIAGRAMS

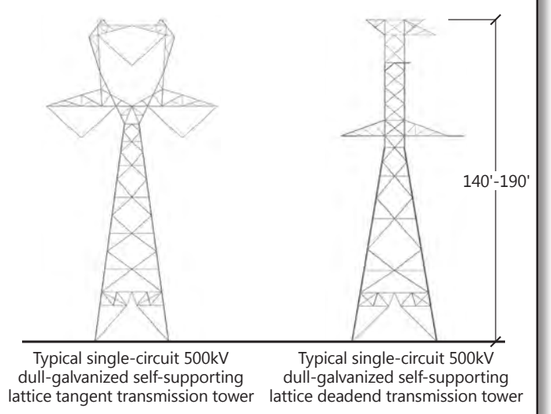

Draft EIS and LUPAs for the Energy Gateway South Transmission Project

KOP #200 – Argyle Canyon Road

Photo Date and Time: July 24, 2012, 3:45 p.m. Focal Length: 50mm

Simulations were prepared using three-dimensional tower models provided by Rocky Mountain Power. Typical towers would range between 140 to 190 feet above ground with a span of 1,200 feet. Tower locations and heights may differ based on final engineering and design.

DRAFT

February 2014

Existing Condition – View looking northeast from Fourmile Bottom in the Lower Green River Corridor ACEC toward BLM VRM Class II and Class IV lands

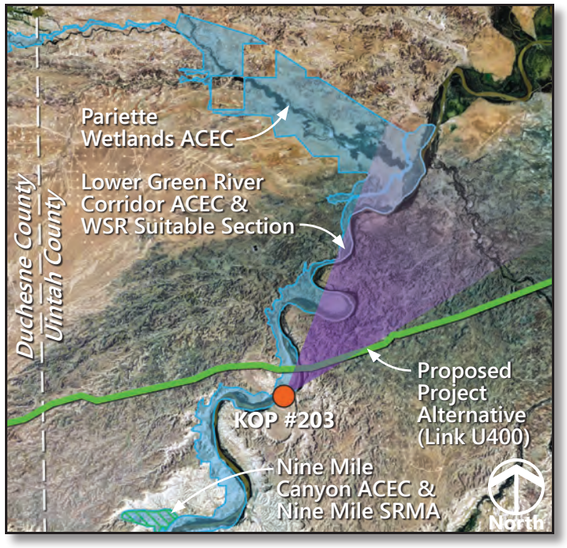

View Location: Approximate distance of proposed transmission line from photo location is 1.0 mile.

Simulated Condition – View of Alternatives COUT-C (and route variations), COUT-H and COUT-I

500kV TOWER STRUCTURE DIAGRAM

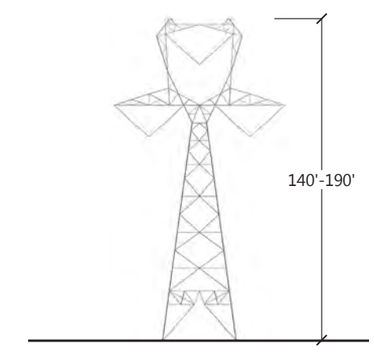

Typical single-circuit 500kV dull-galvanized self-supporting lattice tangent transmission tower

Tower heights shown in simulation vary between 160' and 180'

Draft EIS and LUPAs for the Energy Gateway South Transmission Project

KOP #203 – Fourmile Bottom

Photo Date and Time: July 25, 2012, 2:09 p.m. Focal Length: 50mm

Simulations were prepared using three-dimensional tower models provided by Rocky Mountain Power. Typical towers would range between 140 to 190 feet above ground with a span of 1,200 feet. Tower locations and heights may differ based on final engineering and design.

DRAFT

February 2014

Existing Condition – View looking northeast from Fourmile Bottom in the Lower Green River Corridor ACEC toward BLM VRM Class II and Class IV lands

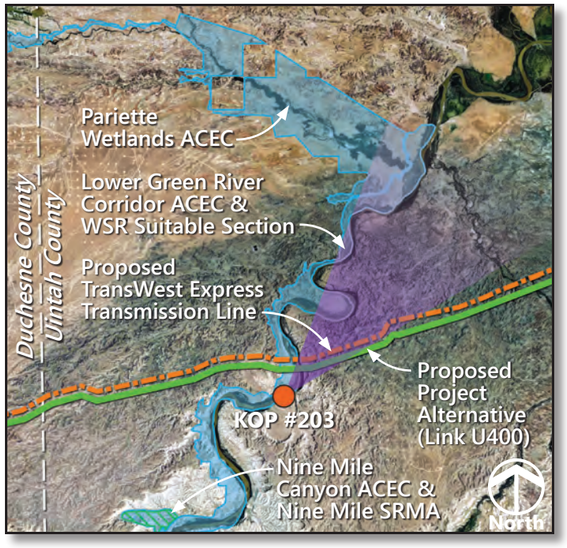

View Location: Approximate distance of proposed transmission line from photo location is 1.0 mile.

Simulated Condition – View of Alternatives COUT-C (and route variations), COUT-H, and COUT-I, and the proposed TransWest Express transmission line

500kV TOWER STRUCTURE DIAGRAM

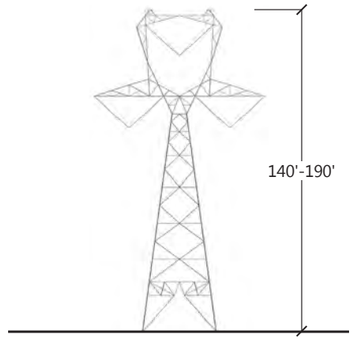

Typical single-circuit 500kV dull-galvanized self-supporting lattice tangent transmission tower

Tower heights shown in simulation vary between 160' and 180'

Draft EIS and LUPAs for the Energy Gateway South Transmission Project

Photo Date and Time: July 25, 2012, 2:09 p.m. Focal Length: 50mm

Energy Gateway South simulations were prepared using three-dimensional tower models provided by Rocky Mountain Power. Typical towers would range between 140 to 190 feet above ground with a span of 1,200 feet. Tower locations and heights may differ based on final engineering and design.

Cumulative effect simulations depicting the proposed TransWest Express project are conceptual and shown for reference only.

KOP #203 – Fourmile Bottom
Cumulative Effects

DRAFT

February 2014

Existing Condition – View looking southwest from residences west of Helper, Utah, toward BLM VRM Class III lands

View Location: Approximate distance to proposed transmission line from photo location is 0.2 mile.

Simulated Condition – View of Alternative COUT-H

500kV TOWER STRUCTURE DIAGRAM

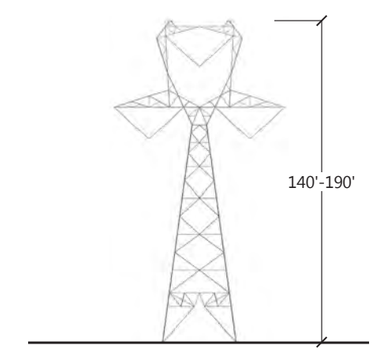

Typical single-circuit 500kV dull-galvanized self-supporting lattice tangent transmission tower

Tower heights shown in simulation vary between 160' and 180'

Draft EIS and LUPAs for the Energy Gateway South Transmission Project

Photo Date and Time: July 23, 2012, 1:44 p.m. Focal Length: 50mm
(The original photographs were taken at 50mm, then stitched together to create this panorama, resulting in an 80-degree field of view)

Simulations were prepared using three-dimensional tower models provided by Rocky Mountain Power. Typical towers would range between 140 to 190 feet above ground with a span of 1,200 feet. Tower locations and heights may differ based on final engineering and design.

KOP #208 – West Helper Residences

DRAFT

February 2014

Existing Condition – View looking southwest from residences west of Helper, Utah, toward BLM VRM Class III lands

View Location: Approximate distance to proposed transmission line from photo location is 0.2 mile.

Simulated Condition – View of Alternative COUT-H and the proposed TransWest Express transmission line

500kV TOWER STRUCTURE DIAGRAM

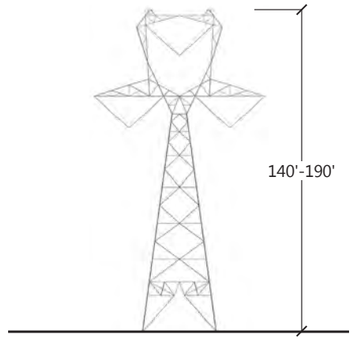

Typical single-circuit 500kV dull-galvanized self-supporting lattice tangent transmission tower

Tower heights shown in simulation vary between 160' and 180'

Draft EIS and LUPAs for the Energy Gateway South Transmission Project

Photo Date and Time: July 23, 2012, 1:44 p.m. Focal Length: 50mm
(The original photographs were taken at 50mm, then stitched together to create this panorama, resulting in an 80-degree field of view)

Energy Gateway South simulations were prepared using three-dimensional tower models provided by Rocky Mountain Power. Typical towers would range between 140 to 190 feet above ground with a span of 1,200 feet. Tower locations and heights may differ based on final engineering and design.

Cumulative effect simulations depicting the proposed TransWest Express project are conceptual and shown for reference only.

KOP #208 – West Helper Residences
Cumulative Effects

DRAFT

February 2014

Existing Condition – View looking southwest from the Dinosaur National Monument Visitor Center toward BLM VRM Class III lands

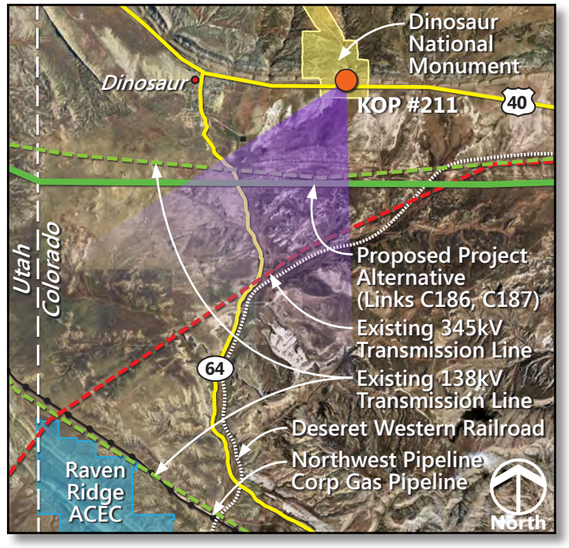

View Location: Approximate distance of proposed transmission line from photo location is 1.3 miles.

Simulated Condition – View of Alternatives COUT-A (and route variation) and COUT-B (and route variations)

500kV TOWER STRUCTURE DIAGRAM

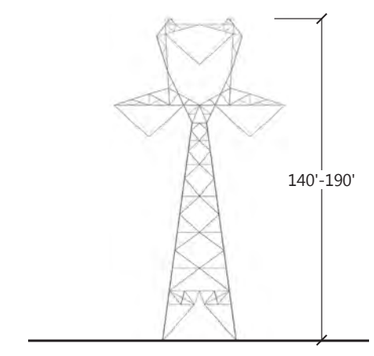

Typical single-circuit 500kV dull-galvanized self-supporting lattice tangent transmission tower

Tower heights shown in simulation vary between 160' and 180'

Draft EIS and LUPAs for the Energy Gateway South Transmission Project

KOP #211a – Dinosaur National Monument Visitor Center

Photo Date and Time: September 26, 2011, 4:39 p.m. Focal Length: 50mm
(The original photographs were taken at 50mm, then stitched together to create this panorama, resulting in a 58-degree field of view)

Simulations were prepared using three-dimensional tower models provided by Rocky Mountain Power. Typical towers would range between 140 to 190 feet above ground with a span of 1,200 feet. Tower locations and heights may differ based on final engineering and design.

DRAFT

February 2014

Existing Condition – View looking southwest from the Dinosaur National Monument Visitor Center toward BLM VRM Class III lands

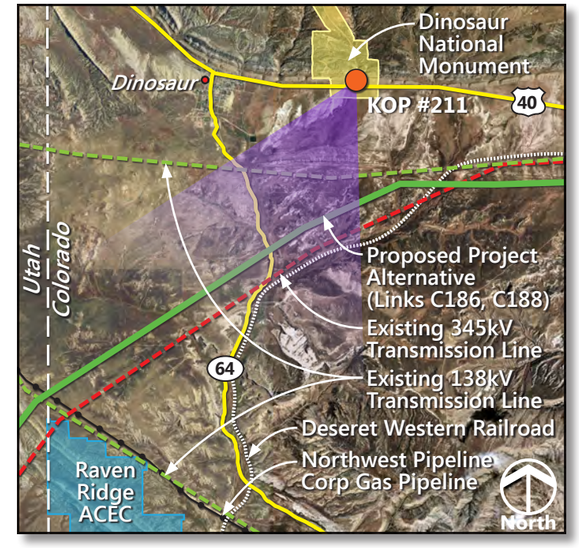

View Location: Approximate distance of proposed transmission line from photo location is 1.7 miles.

Simulated Condition – View of Alternatives COUT-C (and route variations), COUT-H, and COUT-I

500kV TOWER STRUCTURE DIAGRAM

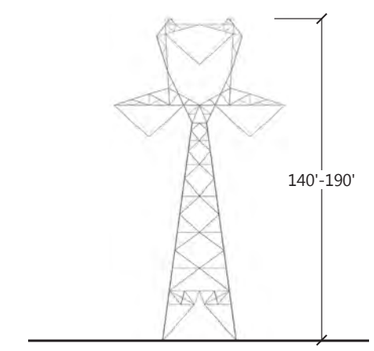

Typical single-circuit 500kV dull-galvanized self-supporting lattice tangent transmission tower

Tower heights shown in simulation vary between 160' and 180'

Draft EIS and LUPAs for the Energy Gateway South Transmission Project

KOP #211b – Dinosaur National Monument Visitor Center

Photo Date and Time: September 26, 2011, 4:39 p.m. Focal Length: 50mm
(The original photographs were taken at 50mm, then stitched together to create this panorama, resulting in a 58-degree field of view)

Simulations were prepared using three-dimensional tower models provided by Rocky Mountain Power. Typical towers would range between 140 to 190 feet above ground with a span of 1,200 feet. Tower locations and heights may differ based on final engineering and design.

DRAFT

February 2014

Existing Condition – View looking southwest from the Dinosaur National Monument Visitor Center toward BLM VRM Class III lands

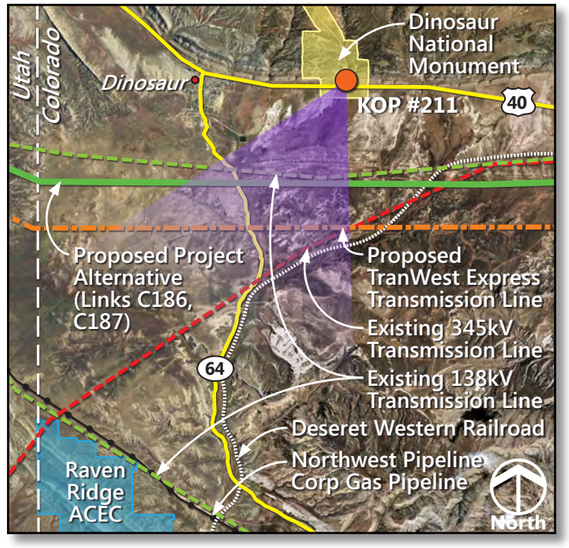

View Location: Approximate distance of proposed transmission line from photo location is 1.3 miles.

Simulated Condition – View of Alternatives COUT-A (and route variation) and COUT-B (and route variations), and the proposed TransWest Express transmission line

500kV TOWER STRUCTURE DIAGRAM

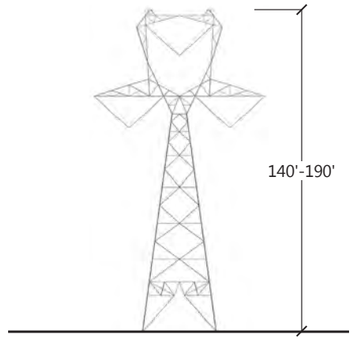

Typical single-circuit 500kV dull-galvanized self-supporting lattice tangent transmission tower

Tower heights shown in simulation vary between 160' and 180'

Draft EIS and LUPAs for the Energy Gateway South Transmission Project

Photo Date and Time: September 26, 2011, 4:39 p.m. Focal Length: 50mm
(The original photographs were taken at 50mm, then stitched together to create this panorama, resulting in a 53-degree field of view)

Energy Gateway South simulations were prepared using three-dimensional tower models provided by Rocky Mountain Power. Typical towers would range between 140 to 190 feet above ground with a span of 1,200 feet. Tower locations and heights may differ based on final engineering and design.

Cumulative effect simulations depicting the proposed TransWest Express project are conceptual and shown for reference only.

KOP #211a – Dinosaur National Monument Visitor Center
Cumulative Effects

DRAFT

February 2014

Existing Condition – View looking southwest from the Dinosaur National Monument Visitor Center toward BLM VRM Class III lands

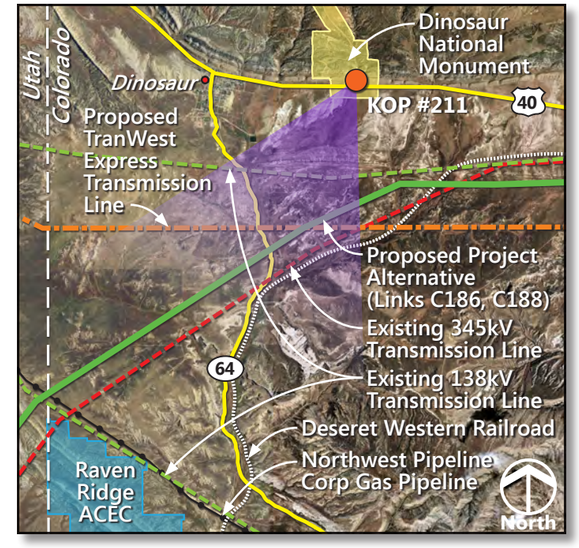

View Location: Approximate distance of proposed transmission line from photo location is 1.7 miles.

Simulated Condition – View of Alternatives COUT-C (and route variations), COUT-H, and COUT-I, and the proposed TransWest Express transmission line

500kV TOWER STRUCTURE DIAGRAM

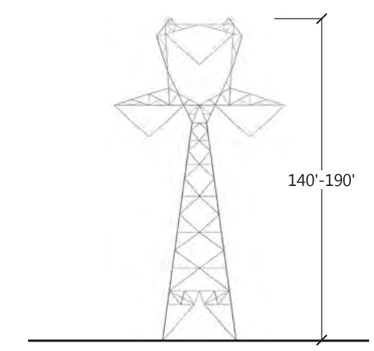

Typical single-circuit 500kV dull-galvanized self-supporting lattice tangent transmission tower

Tower heights shown in simulation vary between 160' and 180'

Draft EIS and LUPAs for the Energy Gateway South Transmission Project

Photo Date and Time: September 26, 2011, 4:39 p.m. Focal Length: 50mm
(The original photographs were taken at 50mm, then stitched together to create this panorama, resulting in a 53-degree field of view)

Energy Gateway South simulations were prepared using three-dimensional tower models provided by Rocky Mountain Power. Typical towers would range between 140 to 190 feet above ground with a span of 1,200 feet. Tower locations and heights may differ based on final engineering and design.

Cumulative effect simulations depicting the proposed TransWest Express project are conceptual and shown for reference only.

KOP #211b – Dinosaur National Monument Visitor Center Cumulative Effects

DRAFT

February 2014

Existing Condition – View looking southwest from the Skyline Drive Scenic Backway in the Manti-La Sal National Forest toward an existing 345kV transmission line (not visible)

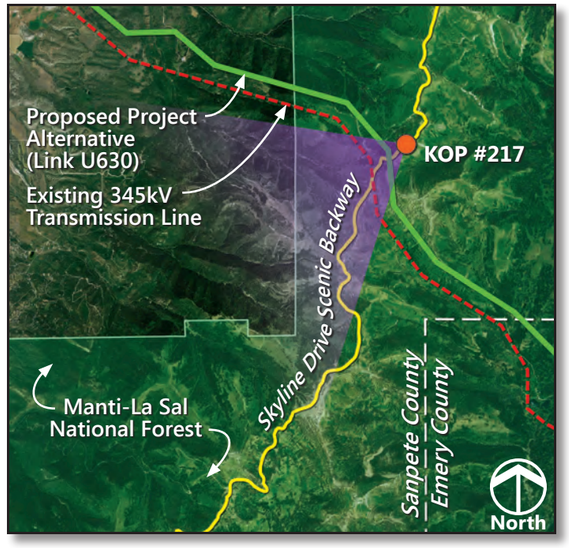

View Location: Approximate distance to proposed transmission line from photo location is 0.3 mile.

Simulated Condition – View of Alternatives COUT BAX-B, COUT BAX-C, and COUT-I

500kV TOWER STRUCTURE DIAGRAM

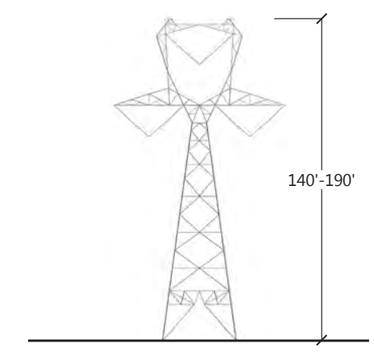

Typical single-circuit 500kV dull-galvanized self-supporting lattice tangent transmission tower

Tower heights shown in simulation vary between 160' and 180'

Draft EIS and LUPAs for the Energy Gateway South Transmission Project

Photo Date and Time: September 27, 2011, 10:02 a.m. Focal Length: 50mm
(The original photographs were taken at 50mm, then stitched together to create this panorama, resulting in a 82-degree field of view)

Simulations were prepared using three-dimensional tower models provided by Rocky Mountain Power. Typical towers would range between 140 to 190 feet above ground with a span of 1,200 feet. Tower locations and heights may differ based on final engineering and design.

KOP #217 – Skyline Drive Scenic Backway

DRAFT

February 2014

Existing Condition – View looking north from Carbon County Road 347, adjacent to the North Platte SRMA, toward BLM VRM Class IV lands

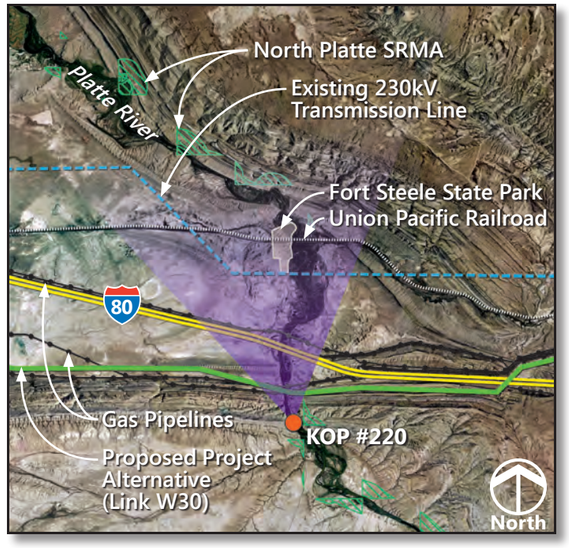

View Location: Approximate distance to proposed transmission line from photo location is 0.5 mile.

Simulated Condition – View of Alternatives WYCO-B (and route variations), WYCO-C (and route variations), WYCO-D (and route variation), and WYCO-F (and route variations)

500kV TOWER STRUCTURE DIAGRAM

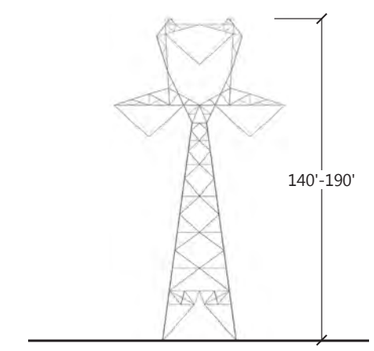

Typical single-circuit 500kV dull-galvanized self-supporting lattice tangent transmission tower

Tower heights shown in simulation vary between 160' and 180'

Draft EIS and LUPAs for the Energy Gateway South Transmission Project

Photo Date and Time: October 7, 2011, 10:09 a.m. Focal Length: 50mm
(The original photographs were taken at 50mm, then stitched together to create this panorama, resulting in a 65-degree field of view)

Simulations were prepared using three-dimensional tower models provided by Rocky Mountain Power. Typical towers would range between 140 to 190 feet above ground with a span of 1,200 feet. Tower locations and heights may differ based on final engineering and design.

KOP #220 – North Platte River SRMA

DRAFT

February 2014

Existing Condition – View looking north from Carbon County Road 347, adjacent to the North Platte SRMA, toward BLM VRM Class IV lands

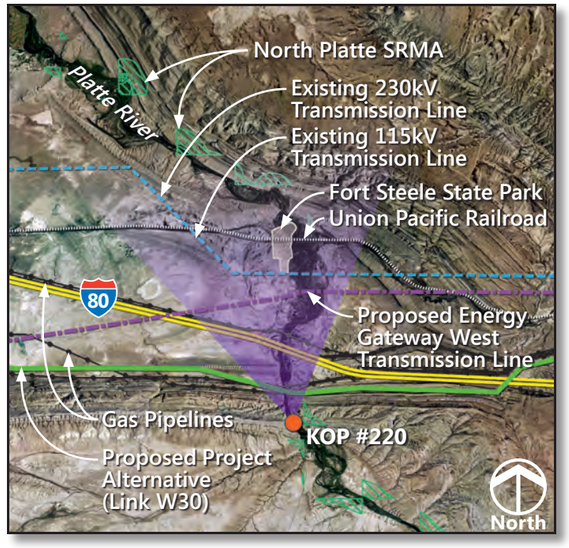

View Location: Approximate distance to proposed transmission line from photo location is 0.5 mile.

Simulated Condition – View of Alternatives WYCO-B (and route variations), WYCO-C (and route variations), WYCO-D (and route variation), and WYCO-F (and route variations), and the proposed Energy Gateway West transmission line

500kV TOWER STRUCTURE DIAGRAM

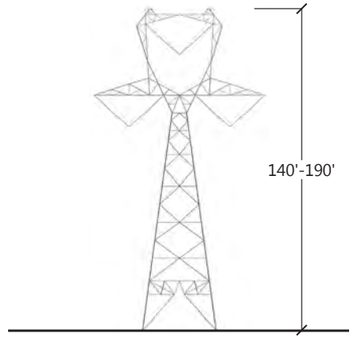

Typical single-circuit 500kV dull-galvanized self-supporting lattice tangent transmission tower

Tower heights shown in simulation vary between 160' and 180'.

Draft EIS and LUPAs for the Energy Gateway South Transmission Project

Photo Date and Time: October 7, 2011, 10:09 a.m. Focal Length: 50mm
(The original photographs were taken at 50mm, then stitched together to create this panorama, resulting in a 65-degree field of view)

Energy Gateway South simulations were prepared using three-dimensional tower models provided by Rocky Mountain Power. Typical towers would range between 140 to 190 feet above ground with a span of 1,200 feet. Tower locations and heights may differ based on final engineering and design.

Cumulative effect simulations depicting the proposed Energy Gateway West project are conceptual and shown for reference only.

KOP #220 – North Platte River SRMA
Cumulative Effects

DRAFT

February 2014

Existing Condition – View looking south from Wyoming Highway 789, north of Baggs, Wyoming, toward BLM VRM Class III lands

View Location: The proposed transmission line would be located adjacent to the photo location.

Simulated Condition – View of Alternative WYCO-D (and route variation)

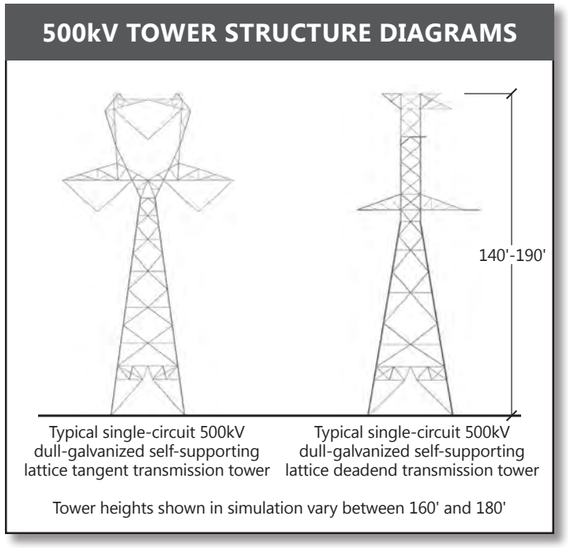

Draft EIS and LUPAs for the Energy Gateway South Transmission Project

KOP #225 – Outlaw Trail Loop Scenic Drive (Wyoming Highway 789 North of Baggs)

Photo Date and Time: October 11, 2011, 1:16 p.m. Focal Length: 50mm
(The original photographs were taken at 50mm, then stitched together to create this panorama, resulting in a 50-degree field of view)

Simulations were prepared using three-dimensional tower models provided by Rocky Mountain Power. Typical towers would range between 140 to 190 feet above ground with a span of 1,200 feet. Tower locations and heights may differ based on final engineering and design.

DRAFT

February 2014

Existing Condition – View looking south from Wyoming Highway 789, north of Baggs, Wyoming, toward BLM VRM Class III lands

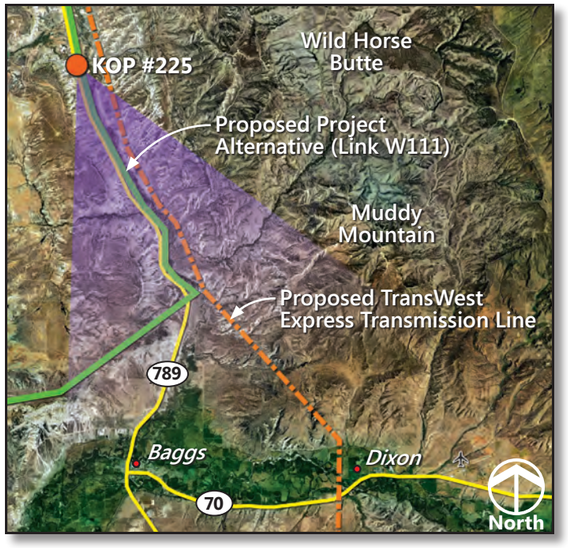

View Location: The proposed transmission line would be located adjacent to the photo location.

Simulated Condition – View of Alternative WYCO-D (and route variation) and the proposed TransWest Express transmission line

500kV TOWER STRUCTURE DIAGRAMS

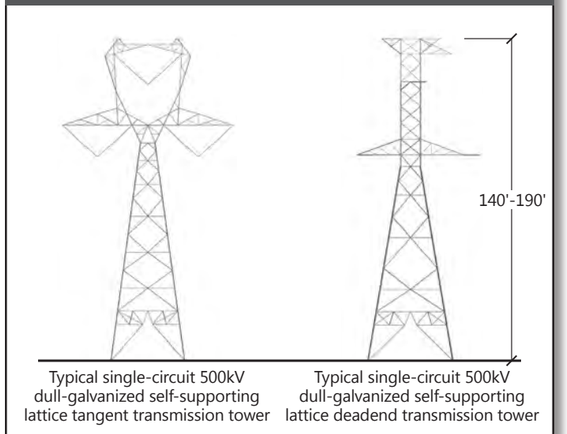

Draft EIS and LUPAs for the Energy Gateway South Transmission Project

Photo Date and Time: October 11, 2011, 1:16 p.m. Focal Length: 50mm
(The original photographs were taken at 50mm, then stitched together to create this panorama, resulting in a 50-degree field of view)

Energy Gateway South simulations were prepared using three-dimensional tower models provided by Rocky Mountain Power. Typical towers would range between 140 to 190 feet above ground with a span of 1,200 feet. Tower locations and heights may differ based on final engineering and design.

Cumulative effect simulations depicting the proposed TransWest Express project are conceptual and shown for reference only.

KOP #225 – Outlaw Trail Loop Scenic Drive (Wyoming Highway 789 North of Baggs)
Cumulative Effects

DRAFT

February 2014

Existing Condition – View looking northeast from the Dinosaur Diamond Scenic Byway (Colorado State Highway 139) in the Canyon Pintado National Historic District within BLM VRM Class III lands

View Location: Approximate distance to proposed transmission line from photo location is 0.5 mile.

Simulated Condition – View of Alternatives COUT BAX-B, COUT BAX-C, and COUT BAX-E

500kV TOWER STRUCTURE DIAGRAM

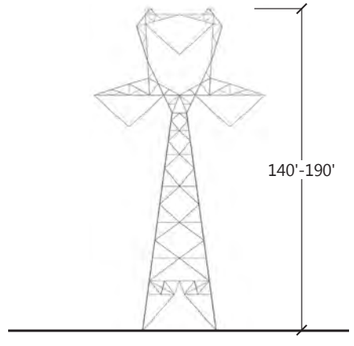

Typical single-circuit 500kV dull-galvanized self-supporting lattice tangent transmission tower

Tower heights shown in simulation vary between 160' and 180'

Draft EIS and LUPAs for the Energy Gateway South Transmission Project

KOP #241 – Dinosaur Diamond in Canyon Pintado NHD (Colorado State Highway 139)

Photo Date and Time: October 3, 2011, 5:07 p.m. Focal Length: 50mm
(The original photographs were taken at 50mm, then stitched together to create this panorama, resulting in a 45-degree field of view)

Simulations were prepared using three-dimensional tower models provided by Rocky Mountain Power. Typical towers would range between 140 to 190 feet above ground with a span of 1,200 feet. Tower locations and heights may differ based on final engineering and design.

DRAFT

February 2014

Existing Condition – View looking northeast from the Dinosaur Diamond Scenic Byway (Colorado State Highway 139) in the Canyon Pintado National Historic District within BLM VRM Class III lands

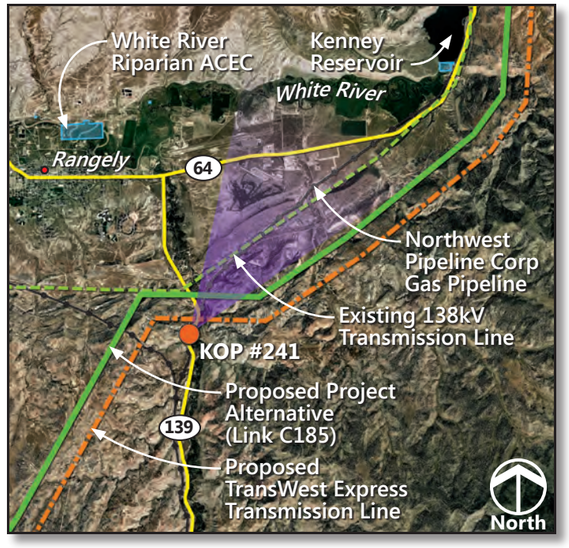

View Location: Approximate distance to proposed transmission line from photo location is 0.5 mile.

Simulated Condition – View of Alternatives COUT BAX-B, COUT BAX-C, and COUT BAX-E, and the proposed TransWest Express transmission line

500kV TOWER STRUCTURE DIAGRAM

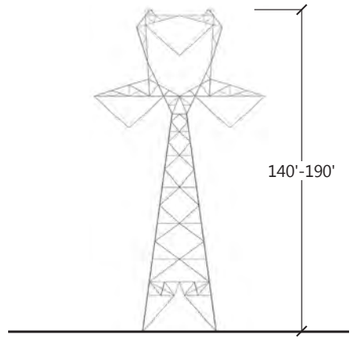

Typical single-circuit 500kV dull-galvanized self-supporting lattice tangent transmission tower

Tower heights shown in simulation vary between 160' and 180'

Draft EIS and LUPAs for the Energy Gateway South Transmission Project

Photo Date and Time: October 3, 2011, 5:07 p.m. Focal Length: 50mm
(The original photographs were taken at 50mm, then stitched together to create this panorama, resulting in a 45-degree field of view)

Energy Gateway South simulations were prepared using three-dimensional tower models provided by Rocky Mountain Power. Typical towers would range between 140 to 190 feet above ground with a span of 1,200 feet. Tower locations and heights may differ based on final engineering and design.

Cumulative effect simulations depicting the proposed TransWest Express project are conceptual and shown for reference only.

KOP #241 – Dinosaur Diamond in Canyon Pintado NHD (Colorado State Highway 139)
Cumulative Effects

DRAFT

February 2014

Existing Condition – View looking north from Garfield County Road 201, adjacent to the Demaree Wilderness Study Area, toward BLM VRM Class III lands

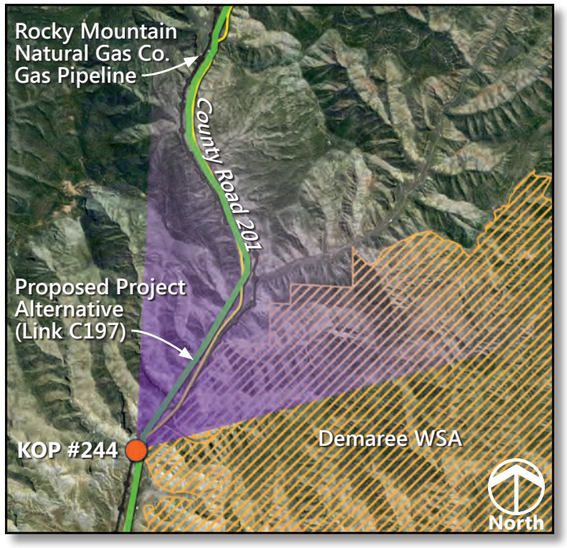

View Location: The photo location is adjacent to the proposed transmission line.

Simulated Condition – View of Alternatives COUT BAX-B, COUT BAX-C, and COUT BAX-E

500kV TOWER STRUCTURE DIAGRAMS

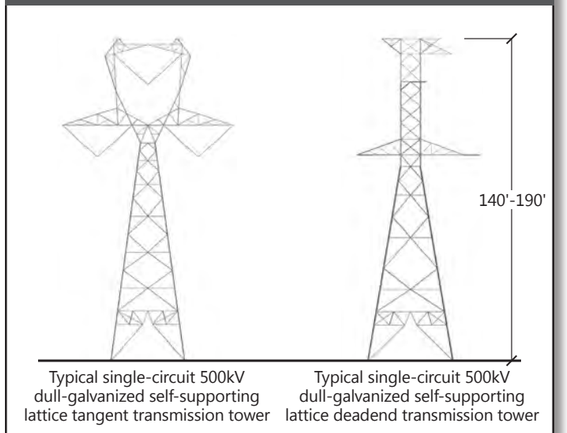

Draft EIS and LUPAs for the Energy Gateway South Transmission Project

KOP #244 – Garfield County Road 201 (South of Baxter Pass)

Photo Date and Time: October 11, 2011, 2:13 p.m. Focal Length: 50mm
(The original photographs were taken at 50mm, then stitched together to create this panorama, resulting in a 72-degree field of view)

Simulations were prepared using three-dimensional tower models provided by Rocky Mountain Power. Typical towers would range between 140 to 190 feet above ground with a span of 1,200 feet. Tower locations and heights may differ based on final engineering and design.

DRAFT

February 2014

Existing Condition – View looking north from Garfield County Road 201, adjacent to the Demaree Wilderness Study Area, toward BLM VRM Class III lands

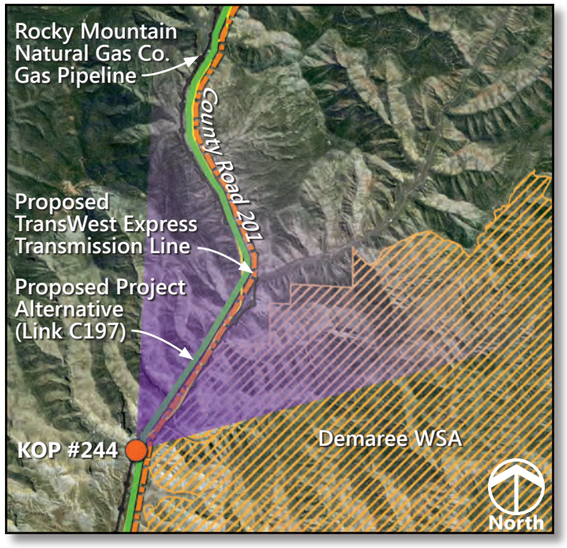

View Location: The photo location is adjacent to the proposed transmission line.

Simulated Condition – View of Alternatives COUT BAX-B, COUT BAX-C, and COUT BAX-E, and the proposed TransWest Express transmission line

500kV TOWER STRUCTURE DIAGRAMS

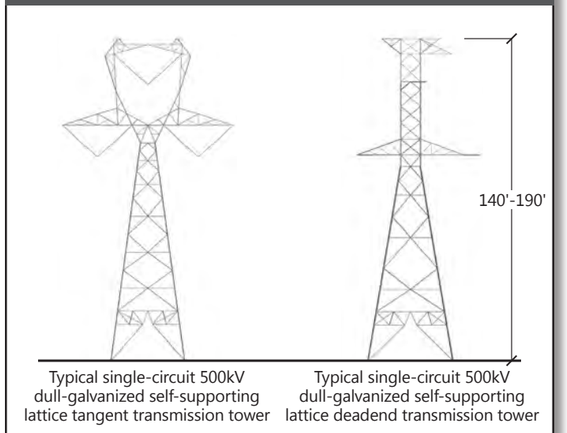

Draft EIS and LUPAs for the Energy Gateway South Transmission Project

Photo Date and Time: October 11, 2011, 2:13 p.m. Focal Length: 50mm
(The original photographs were taken at 50mm, then stitched together to create this panorama, resulting in a 72-degree field of view)

Energy Gateway South simulations were prepared using three-dimensional tower models provided by Rocky Mountain Power. Typical towers would range between 140 to 190 feet above ground with a span of 1,200 feet. Tower locations and heights may differ based on final engineering and design.

Cumulative effect simulations depicting the proposed TransWest Express project are conceptual and shown for reference only.

KOP #244 – Garfield County Road 201
(South of Baxter Pass)
Cumulative Effects

DRAFT

February 2014

Existing Condition – View looking east from U.S. Highway 6 east of Wellington, Utah toward an existing 138kV transmission line and BLM VRM Class III lands

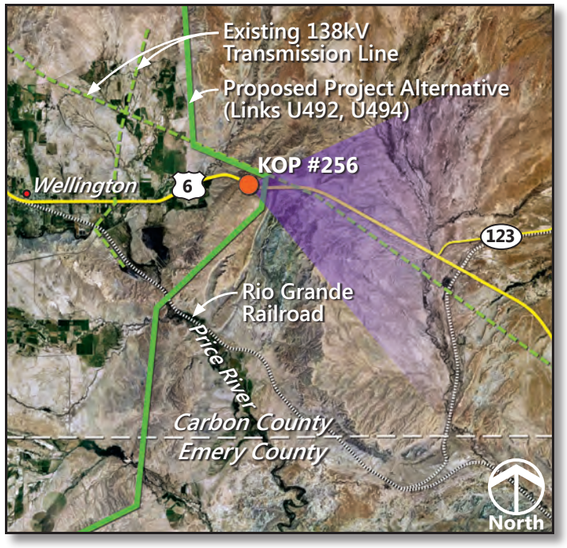

View Location: Approximate distance to proposed transmission line from photo location is 0.4 mile.

Simulated Condition – View of Alternative COUT-I

500kV TOWER STRUCTURE DIAGRAMS

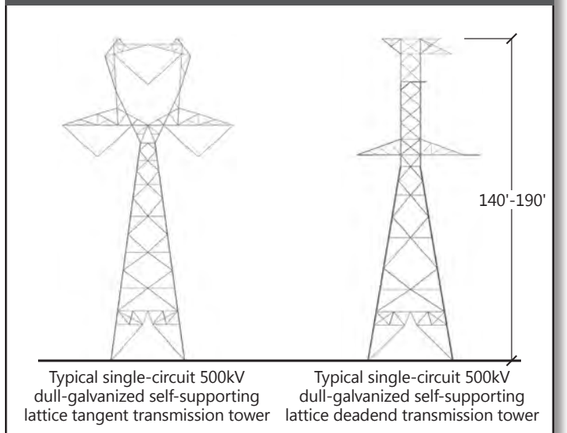

Draft EIS and LUPAs for the Energy Gateway South Transmission Project

KOP #256 – U.S. Highway 6 east of Wellington

Photo Date and Time: July 23, 2012, 10:52 a.m. Focal Length: 50mm
(The original photographs were taken at 50mm, then stitched together to create this panorama, resulting in a 76-degree field of view)

Simulations were prepared using three-dimensional tower models provided by Rocky Mountain Power. Typical towers would range between 140 to 190 feet above ground with a span of 1,200 feet. Tower locations and heights may differ based on final engineering and design.

DRAFT

February 2014

Existing Condition – View looking south from Utah State Route 31 within the Manti-La Sal National Forest

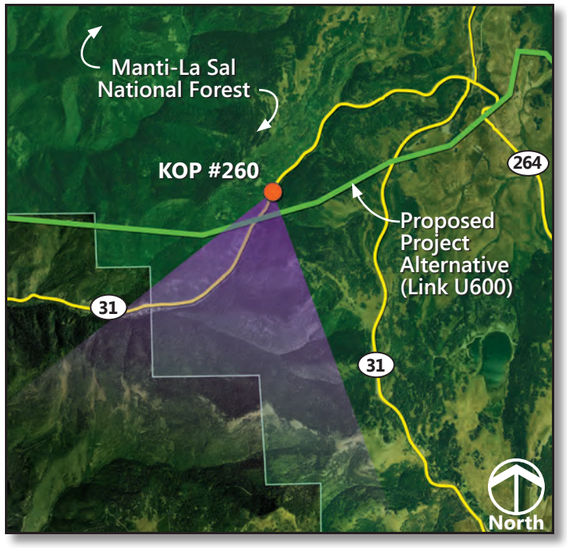

View Location: Approximate distance to proposed transmission line from photo location is 0.2 mile.

Simulated Condition – View of Alternatives COUT-BAX-E and COUT H

500kV TOWER STRUCTURE DIAGRAM

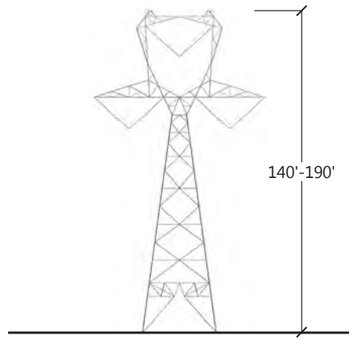

Typical single-circuit 500kV dull-galvanized self-supporting lattice tangent transmission tower

Tower heights shown in simulation vary between 160' and 180'

Draft EIS and LUPAs for the Energy Gateway South Transmission Project

KOP #260 – Energy Loop Scenic Byway (Utah SR 31)

Photo Date and Time: September 27, 2011, 1:21 p.m. Focal Length: 50mm
(The original photographs were taken at 50mm, then stitched together to create this panorama, resulting in a 66-degree field of view)

Simulations were prepared using three-dimensional tower models provided by Rocky Mountain Power. Typical towers would range between 140 to 190 feet above ground with a span of 1,200 feet. Tower locations and heights may differ based on final engineering and design.

DRAFT

February 2014

Existing Condition – View looking south from Utah State Route 31 within the Manti-La Sal National Forest

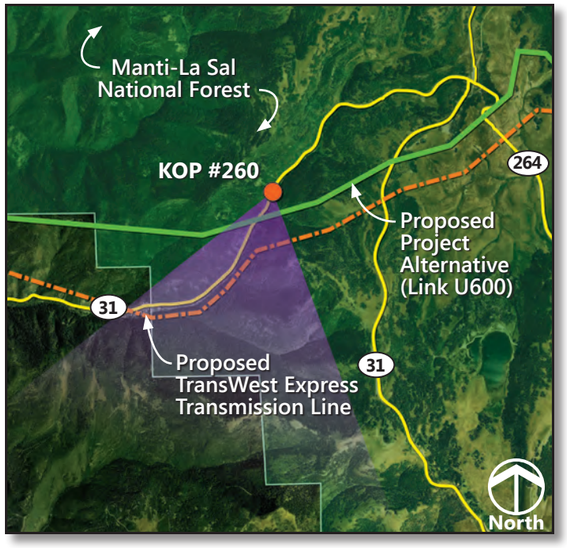

View Location: Approximate distance to proposed transmission line from photo location is 0.2 mile.

Simulated Condition – View of Alternatives COUT-BAX-E and COUT H, and the proposed TransWest Express transmission line

500kV TOWER STRUCTURE DIAGRAM

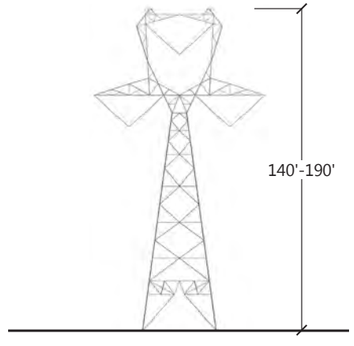

Typical single-circuit 500kV dull-galvanized self-supporting lattice tangent transmission tower

Tower heights shown in simulation vary between 160' and 180'

Photo Date and Time: September 27, 2011, 1:21 p.m. Focal Length: 50mm
(The original photographs were taken at 50mm, then stitched together to create this panorama, resulting in a 66-degree field of view)

Energy Gateway South simulations were prepared using three-dimensional tower models provided by Rocky Mountain Power. Typical towers would range between 140 to 190 feet above ground with a span of 1,200 feet. Tower locations and heights may differ based on final engineering and design.

Cumulative effect simulations depicting the proposed TransWest Express project are conceptual and shown for reference only.

Draft EIS and LUPAs for the Energy Gateway South Transmission Project

KOP #260 – Energy Loop Scenic Byway (Utah SR 31)
Cumulative Effects

DRAFT

February 2014

Existing Condition – View looking northeast from the community of Fairview toward Fairview Canyon on the Manti-La Sal National Forest

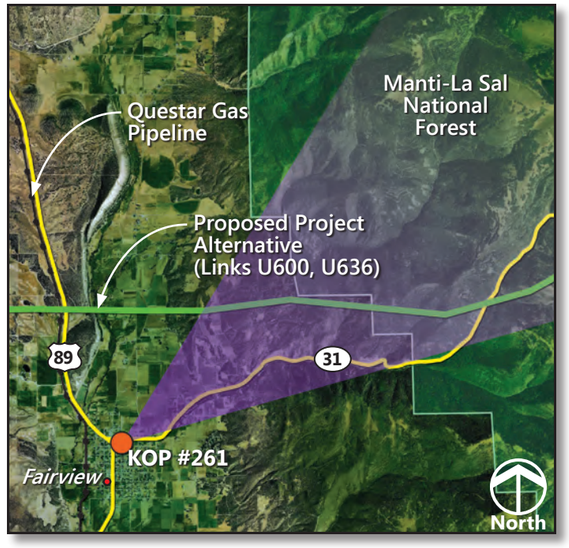

View Location: Approximate distance to proposed transmission line from photo location is 2.1 miles.

Simulated Condition – View of Alternatives COUT BAX-E and COUT-H

500kV TOWER STRUCTURE DIAGRAM

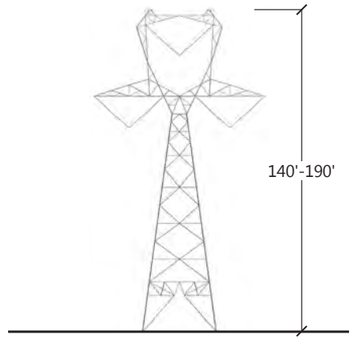

Typical single-circuit 500kV dull-galvanized self-supporting lattice tangent transmission tower

Tower heights shown in simulation vary between 160' and 180'

Draft EIS and LUPAs for the Energy Gateway South Transmission Project

KOP #261 – Fairview Residential

Photo Date and Time: September 26, 2011, 5:13 p.m. Focal Length: 50mm

Simulations were prepared using three-dimensional tower models provided by Rocky Mountain Power. Typical towers would range between 140 to 190 feet above ground with a span of 1,200 feet. Tower locations and heights may differ based on final engineering and design.

DRAFT

February 2014