United States Department of the Interior
Bureau of Land Management
Casper Field Office
Lander Field Office
Buffalo Field Office

March 2001

# Petro Source Carbon Dioxide Pipeline Project

# Environmental Assessment
# EA No. WY-060-01-033

*BLM MISSION STATEMENT*

*The Bureau of Land Management is responsible for the stewardship of our public lands. It is committed to manage, protect, and improve these lands in a manner to serve the needs of the American people for all times.*

*Management is based upon the principles of multiple use and sustained yield of our nation's resources within a framework of environmental responsibility and scientific technology. These resources include recreation, rangelands, timber, minerals, watershed, fish and wildlife, wilderness, air and scenic, scientific, and cultural values.*

# United States Department of the Interior

BUREAU OF LAND MANAGEMENT
Casper Field Office
2987 Prospector Drive
Casper, Wyoming 82604-2968


1792
Petro Source

MAR 2 2001

Dear Reviewer:

This Environmental Assessment (EA) is furnished for your review and comment Written comments will be considered in the decision if they are received by April 6, 2001.

The decision on the proposed Petro Source CO2 Pipeline will be based upon the analysis in the EA, public concerns and comments, and other multiple-use resource objectives or programs that apply to the project. Decision Record, detailing the decision of the ELM and its rationale for the decision, will be prepared and distributed upon request as soon as the decision is reached following the end of the 30-day review period.

Comments on the content of this EA should be sent to:

Glen Nebeker
Bureau of Land Management
Casper Field Office
2987 Prospector Drive
Casper, WY 82604

Comments, including the names and street addresses of respondents, will be made available for review by the public at this office during regular business hours (7:45 a.m. to 4:30 p.m.), Monday through Friday, except holidays. Individual respondents may request confidentiality. f you wish to withhold your name and/or street address from public review or from disclosure under the Freedom of Information Act, you must state this prominently at the beginning of your written comment. Such requests will be honored to the extent allowed bylaw. ll submissions from organizations or businesses, and from individuals identifying themselves as representatives or officials of organizations or businesses, will be made available for public inspection in their entirety.

This decision may be appealed to the Interior Board of Land Appeals, Office of the Secretary, in accordance with the regulations contained in CFR 4. If an appeal is filed, your notice of appeal must be filed in this office within 30 days of the date BLM publishes their notice of the decision in the Casper Star Tribune The appellant has the burden showing the decision appealed from is in error.

The BLM appreciates the individuals, organizations, and Federal, State, and Local Governments who participated in the environmental analysis process. Your involvement enhances the integrity of the EA and the public land manager's ability to make an informed decision.

Sincerely,

William H Mortimer

Field Manager, Casper

ACTING

# PETRO SOURCE CARBON DIOXIDE PIPELINE PROJECT
# ENVIRONMENTAL ASSESSMENT
# EA NO. WY-060-01-033

**Prepared for:**

**U.S. DEPARTMENT OF THE INTERIOR**
**BUREAU OF LAND MANAGEMENT**
**CASPER FIELD OFFICE**
**Casper, Wyoming**

**U.S. DEPARTMENT OF THE INTERIOR**
**BUREAU OF LAND MANAGEMENT**
**LANDER FIELD OFFICE**
**Lander, Wyoming**

**U.S. DEPARTMENT OF THE INTERIOR**
**BUREAU OF LAND MANAGEMENT**
**BUFFALO FIELD OFFICE**
**Buffalo, Wyoming**

**March 2001**

## CONTENTS

**1.0 INTRODUCTION AND BACKGROUND ..... 1-1**

1.1 Introduction ..... 1-1

1.2 Project History and Background ..... 1-1

1.3 Purpose and Need for the Proposed Action ..... 1-2
1.3.1 Value of Enhanced Oil Recovery ..... 1-3
1.3.2 Use of $CO_2$ in Enhanced Oil Recovery ..... 1-4

1.4 Location of the Proposed Action ..... 1-5

1.5 Authorizing Actions ..... 1-5

1.6 Conformance with Land Use Plans ..... 1-10

1.7 Project Interrelationships ..... 1-10
1.7.1 Interrelated Projects ..... 1-10
1.7.2 Special Management Areas ..... 1-11

**2.0 DESCRIPTION OF THE PROPOSED ACTION AND ALTERNATIVES ..... 2-1**

2.1 Introduction ..... 2-1

2.2 Proposed Action ..... 2-3
2.2.1 Description of Facilities ..... 2-3
2.2.1.1 $CO_2$ Pipeline ..... 2-3
2.2.1.2 Scraper Traps, Block Valves, and Takeoff Valves ..... 2-6
2.2.1.3 Meter Terminal ..... 2-6
2.2.1.4 Measurement Facilities and Supervisory Control and Data Acquisition (SCADA) System ..... 2-10
2.2.1.5 Corrosion Protection ..... 2-14
2.2.2 Construction ..... 2-14
2.2.2.1 ROW Clearing and Grading ..... 2-20
2.2.2.2 Trenching ..... 2-22
2.2.2.3 Trench Backfilling ..... 2-23
2.2.2.4 Blasting ..... 2-23

**CONTENTS (Cont'd)**


2.2.2.5 Highway, Railroad, WSAs, and Trail Crossings ..... 2-24
2.2.2.6 Stream and Wetland Crossings ..... 2-25
2.2.2.7 Water Withdrawals for Hydrostatic Testing, Directional Drilling, and Dust Abatement ..... 2-26
2.2.2.8 Cleanup and Restoration ..... 2-26
2.2.2.9 Special Construction Areas ..... 2-28
2.2.2.10 Hazardous Materials/Wastes ..... 2-30
2.2.3 Operation ..... 2-30
2.2.3.1 Rupture Scenario ..... 2-30
2.2.4 Abandonment ..... 2-31

2.3 No Action Alternative ..... 2-31

2.4 Alternatives Considered but Eliminated From Detailed Analysis ..... 2-32
2.4.1 Truck Transportation of $CO_2$ ..... 2-32
2.4.2 Casper Alternative ..... 2-32
2.4.3 Crooks Gap Alternative ..... 2-32
2.4.4 Lateral Alternatives ..... 2-33

2.5 Environmental Protection Measures ..... 2-33
2.5.1 Air Quality ..... 2-33
2.5.2 Geology and Soils ..... 2-33
2.5.3 Water Resources and Wetlands ..... 2-34
2.5.4 Vegetation and Agriculture ..... 2-36
2.5.5 Wildlife, Fisheries, and Special Status Species ..... 2-37
2.5.6 Recreation and Visual Resources ..... 2-39
2.5.7 Socioeconomics ..... 2-40
2.5.8 Cultural and Paleontological Resources ..... 2-40

**3.0 AFFECTED ENVIRONMENT ..... 3-1**

3.1 Air Quality ..... 3-2
3.1.1 Climate ..... 3-2
3.1.2 Air Quality ..... 3-2

3.2 Geology and Soils ..... 3-3
3.2.1 Geology ..... 3-3
3.2.2 Soils ..... 3-3

**CONTENTS (Cont'd)**


3.3 Mineral and Paleontological Resources ..... 3-8

3.4 Water Resources ..... 3-11
3.4.1 Surface Water ..... 3-11
3.4.2 Groundwater ..... 3-14

3.5 Vegetation, Wetlands, Agriculture, and Range Resources ..... 3-15
3.5.1 Vegetation and Wetlands ..... 3-15
3.5.2 Noxious Weeds ..... 3-20
3.5.3 Agriculture and Range Resources ..... 3-20
3.5.4 Threatened, Endangered, Candidate, and Sensitive Plant Species ..... 3-21

3.6 Wildlife ..... 3-23
3.6.1 Recreationally and Economically Important Species and Nongame Wildlife ..... 3-23
3.6.1.1 Big Game Species ..... 3-23
3.6.1.2 Small Game Species ..... 3-25
3.6.1.3 Nongame Species ..... 3-26
3.6.2 Threatened, Endangered, Candidate, and Sensitive Wildlife Species ..... 3-28
3.6.2.1 Mammals ..... 3-28
3.6.2.2 Birds ..... 3-30
3.6.2.3 Other Sensitive Species ..... 3-32

3.7 Aquatic Resources ..... 3-32
3.7.1 Sweetwater River ..... 3-33
3.7.2 Sheep Creek ..... 3-33
3.7.3 Cottonwood Creek Tributaries and Dry Creek ..... 3-34
3.7.4 Cooper and Horse Creeks ..... 3-34
3.7.5 Poison Spider, Coyote, Middle Fork Casper, and Salt Creeks ..... 3-34
3.7.6 Threatened, Endangered, and Sensitive Species ..... 3-34

3.8 Land Use and Recreation ..... 3-34
3.8.1 Land Use ..... 3-34
3.8.2 Recreation ..... 3-37

3.9 Wilderness ..... 3-38

3.10 Visual Resources and Noise ..... 3-41
3.10.1 Visual Resources ..... 3-41

**CONTENTS (Cont'd)**

3.10.2 Noise ..... 3-46

3.11 Socioeconomics ..... 3-46
3.11.1 Population ..... 3-47
3.11.2 Economic Conditions ..... 3-47
3.11.3 Income ..... 3-52
3.11.4 Employment ..... 3-52
3.11.5 Housing ..... 3-53
3.11.6 Local Government Facilities and Services ..... 3-54
3.11.7 Local Fiscal Conditions ..... 3-54

3.12 Environmental Justice ..... 3-54
3.12.1 Minority Populations ..... 3-55
3.12.2 Low-Income Populations ..... 3-56

3.13 Transportation ..... 3-56

3.14 Cultural Resources/Native American ..... 3-58
3.14.1 Cultural Resources ..... 3-58
3.14.2 Native American Consultation ..... 3-62

**4.0 ENVIRONMENTAL CONSEQUENCES ..... 4-1**

4.1 Air Quality ..... 4-1

4.2 Geology and Soils ..... 4-3
4.2.1 Geology ..... 4-3
4.2.2 Soils ..... 4-4

4.3 Mineral and Paleontological Resources ..... 4-6

4.4 Water Resources ..... 4-8
4.4.1 Surface Water ..... 4-8
4.4.2 Groundwater ..... 4-10

4.5 Vegetation, Wetlands, Agriculture, and Range Resources ..... 4-10
4.5.1 Vegetation and Wetlands ..... 4-10
4.5.2 Noxious Weeds ..... 4-13
4.5.3 Agriculture and Range Resources ..... 4-14

**CONTENTS (Cont'd)**

4.5.4 Threatened, Endangered, Candidate, and Sensitive Plant Species ..... 4-14

4.6 Wildlife ..... 4-14
4.6.1 Game and Nongame Wildlife Species ..... 4-15
4.6.1.1 Big Game Species ..... 4-15
4.6.1.2 Small Game Species ..... 4-16
4.6.1.3 Nongame Species ..... 4-18
4.6.2 Threatened, Endangered, and Sensitive Species ..... 4-20
4.6.2.1 Mammals ..... 4-20
4.6.2.2 Birds ..... 4-22
4.6.2.3 Other Sensitive Species ..... 4-24

4.7 Aquatic Resources ..... 4-25

4.8 Land Use and Recreation ..... 4-27

4.9 Wilderness ..... 4-29

4.10 Visual Resources and Noise ..... 4-29
4.10.1 Visual Resources ..... 4-29
4.10.2 Noise ..... 4-32

4.11 Socioeconomics ..... 4-32

4.12 Environmental Justice ..... 4-35

4.13 Transportation ..... 4-35

4.14 Cultural Resources/Native American Concerns ..... 4-36
4.14.1 Cultural Resources ..... 4-36
4.14.2 Native American Consultation ..... 4-39

4.15 No Action Alternative ..... 4-39

**5.0 RESIDUAL AND CUMULATIVE IMPACTS ..... 5-1**

5.1 Commitment of Resources ..... 5-1

5.2 Residual Impacts ..... 5-1

**CONTENTS (Cont'd)**

5.3 Cumulative Impacts ..... 5-3

**6.0 CONSULTATION AND COORDINATION ..... 6-1**

6.1 Scoping Process ..... 6-1

6.2 Results of the Scoping Process ..... 6-1

6.3 Coordination ..... 6-1

6.4 Team Organization ..... 6-3

6.5 EA Preparers ..... 6-3

**7.0 REFERENCES ..... 7-1**

**APPENDIX A – PROGRAMMATIC AGREEMENT**

**APPENDIX B – WETLAND AND NOXIOUS WEED DATA**

## LIST OF TABLES


**1-1** Federal, State and Local Permits, Approvals, and Reviews Required for Construction and Operation of the Proposed PSC $CO_2$ Pipeline Project ..... 1-7
**1-2** Summary of Oil Production in the Salt Creek, Sussex, and Hartzog Draw Oil Fields .... 1-10
**2-1** Acres Disturbed, Removed, and Reclaimed by the Proposed PSC $CO_2$ Pipeline Project ..... 2-2
**2-2** Estimated Construction Worker Requirements for the Proposed PSC $CO_2$ Pipeline Segment ..... 2-2
**2-3** Location of Scraper Traps, Block Valves, and Takeoff Valves for the Proposed PSC $CO_2$ Pipeline ..... 2-10
**2-4** Major Pieces of Equipment Required for Construction of the Proposed PSC $CO_2$ Pipeline ..... 2-18
**2-5** Access Road Summary ..... 2-19
**2-6** Summary of Construction Temporary Use Areas PSC $CO_2$ Pipeline Project ..... 2-21
**2-7** Highway and Railroad Crossings for the Proposed PSC $CO_2$ Pipeline ..... 2-24
**3-1** Potential Geologic Hazards Along the Proposed PSC $CO_2$ Pipeline ..... 3-4
**3-2** Sensitive Soils Along the Proposed PSC $CO_2$ Pipeline Route ..... 3-6
**3-3** Paleontological Sensitivity of Geologic Formations or Stratigraphic Units Crossed by the Proposed PSC $CO_2$ Pipeline ..... 3-10
**3-4** Perennial Streams Crossed by the Proposed PSC $CO_2$ Pipeline Project ..... 3-13
**3-5** Vegetation Types Identified Along the Proposed PSC $CO_2$ Pipeline Project[1] ..... 3-16
**3-6** Special Status Plant Species Potentially Occurring in the Near the Proposed PSC $CO_2$ Pipeline Project Study Area ..... 3-22
**3-7** Big Game Crucial Winter and Partuition Ranges Crossed by the Proposed PSC $CO_2$ Pipeline Route ..... 3-24
**3-8** Special Status Wildlife Species Identified for the Proposed Petro Source $CO_2$ Pipeline Project ..... 3-28
**3-9** Recreational Fisheries Crossed by the Proposed PSC $CO_2$ Pipeline ..... 3-33
**3-10** Visual Resource Management Classes ..... 3-42
**3-11** Visual Resource Management Class Designations for the Proposed PSC $CO_2$ Pipeline Route ..... 3-45
**3-12** Fremont County Economic/Demographic Profile for the Proposed PSC $CO_2$ Pipeline Project ..... 3-48
**3-13** Natrona County Economic/Demographic Profile for the Proposed PSC $CO_2$ Pipeline Project ..... 3-49
**3-14** Johnson County Economic/Demographic Profile for the Proposed PSC $CO_2$ Pipeline Project ..... 3-50

## LIST OF TABLES (Cont'd)


**3-15** Campbell County Economic/Demographic Profile for the Proposed PSC $CO_2$ Pipeline Project ..... 3-51
**3-16** Average Weekly Wage for the Proposed PSC $CO_2$ Pipeline Project ..... 3-52
**3-17** Temporary Housing Accommodations for the Proposed PSC $CO_2$ Pipeline Project..... 3-53
**3-18** Traffic Levels for Major Highways Crossed by the Proposed PSC $CO_2$ Pipeline, 1998 . 3-57
**3-19** Historic Trails Eligible to the NRHP Documented Along the Proposed PSC $CO_2$ Pipeline Route ..... 3-59
**3-20** NRHP - Eligible Sites Located During the Class III Pedestrian Survey ..... 3-60
**4-1** Applicable Ambient Air Quality Standards for the Proposed PSC $CO_2$ Pipeline Project.. 4-1
**4-2** Construction Emissions Estimates for the Proposed PSC $CO_2$ Pipeline Project..... 4-2
**4-3** Estimated Acreage of Vegetation Types Disturbed, Removed, and Reclaimed During Construction of the Proposed PSC $CO_2$ Pipeline ..... 4-10
**4-4** Constraint Periods for Big Game Crucial Winter and Partuition Ranges Crossed by the Proposed PSC $CO_2$ Pipeline Project ..... 4-16
**4-5** Constraint Periods for Breeding and Nesting Sage Grouse Along the Proposed PSC $CO_2$ Pipeline Project..... 4-17
**4-6** Prairie Dog Colonies That Would be Crossed by the Proposed..... 4-21
Petro Source $CO_2$ Pipeline Project..... 4-21
**4-7** Contribution to Tax Base for the Proposed PSC $CO_2$ Pipeline..... 4-34
**4-8** Field Recommendations for Eligible Sites Located Along the Proposed PSC $CO_2$ Pipeline Route ..... 4-38
**5-1** Resource Commitments Identified for the Proposed PSC $CO_2$ Pipeline Project..... 5-2
**5-2** Potential Impacts of Using $CO_2$ Injection in EOR Activities ..... 5-5
**6-1** List of Preparers for the PSC $CO_2$ Pipeline EA..... 6-4

## LIST OF FIGURES


**1-1** Proposed Petro Source $CO_2$ Pipeline Route ..... 1-6
**2-1** Southern Portion of Proposed PSC $CO_2$ Pipeline Route ..... 2-4
**2-2** Northern Portion of Proposed PSC $CO_2$ Pipeline Route ..... 2-5
**2-3** Typical Scraper Trap Installation ..... 2-7
**2-4** Typical Block Valve Configuration ..... 2-8
**2-5** Typical Take Off Installation ..... 2-9
**2-6** Bairoil Measurement Facility ..... 2-11
**2-7** Salt Creek Measurement Facility ..... 2-12
**2-8** Sussex Measurement Facility ..... 2-13
**2-9** Typical Rural Construction Spread ..... 2-16
**2-10** Typical ROW Construction Configuration with Topsoil Salvage ..... 2-17
**3-1** Schematic Detailing Pipeline Alignment between Split Rock and Miller Springs WSAs 3-40
**3-2** Typical Views of Study Area Landscape ..... 3-43

# 1.0 INTRODUCTION AND BACKGROUND

## 1.1 Introduction

Petro Source Corporation (PSC) proposes to construct and operate approximately 155 miles of 12-inch liquid carbon dioxide ($CO_2$) pipeline from the Bairoil Terminal on the existing Wyoming-Dakota $CO_2$ Pipeline in Fremont County, Wyoming, to a point in the Hartzog Draw Unit oil field in Campbell County, Wyoming. The route for this pipeline extension was previously analyzed in the Bairoil/Dakota Carbon Dioxide Projects Environmental Impact Statement (EIS) finalized in February 1986 (Bureau of Land Management [BLM] 1986a). For consistency purposes, the same milepost (MP) designations (MP 112 at the Bairoil Terminal to MP 267 at the Hartzog Draw Unit oil field) are used in this document. A new 7-mile lateral pipeline (8-inch diameter) also would be constructed to the Salt Creek oil field in Natrona County. The $CO_2$ transported by the pipeline would be used for Enhanced Oil Recovery (EOR) at the existing Salt Creek, Sussex, and Hartzog Draw Units and other potential oil fields.

This Environmental Assessment (EA) has been prepared under the direction of the BLM, serving as the lead agency in compliance with the National Environmental Policy Act of 1969 (NEPA). This document follows the guidelines promulgated by the Council on Environmental Quality (CEQ) for implementing the procedural provisions of NEPA (40 Code of Federal Regulations [CFR] 1500-1508) and BLM's NEPA Handbook (H-1790-1). This EA is being prepared as an updated document following the previously prepared Exxon Wyoming-Dakota Pipeline Segment 2and Hartzog Draw Unit $CO_2$ Projects EA (BLM 1991).

This chapter of the EA provides the history and background of past proposals and previously constructed projects leading to the proposed PSC Pipeline Project analyzed in this EA. It also presents the purpose and need for the project including a general discussion of EOR and an overview of $CO_2$ use in the EOR process. In addition, Chapter 1.0 describes the project location and identifies other authorizing actions necessary for the project to be constructed. A complete description of the Proposed Action is provided in Chapter 2.0.

## 1.2 Project History and Background

In 1984, Exxon (now ExxonMobil) applied to the BLM for a $CO_2$ pipeline route, which was located west of Green River, Wyoming, to a point known as the Bairoil Terminal at MP 112 and then into Bairoil terminating at the Amoco oil field. In early 1985, Exxon submitted an additional application for a $CO_2$ pipeline from Bairoil Terminal to Tioga, North Dakota.

During the same period, Amoco also applied for pipeline rights-of-way (ROWs) to transport $CO_2$ from the Rangley Pipeline to Bairoil and later for an additional segment to parallel the Rangely Pipeline back to the Rock Springs meter station at Interstate 80 (I-80) west of Rock Springs, Wyoming. At that time, Amoco also was negotiating with Exxon to transport $CO_2$ to the Bairoil Terminal where Amoco would construct the $CO_2$ spur line into Bairoil for its EOR project at the Amoco Bairoil oil field.

In conjunction with Exxon's original proposal to transport $CO_2$ across the southeast corner of Montana to its destination near Tioga, North Dakota, Shell also submitted a ROW application for $CO_2$ distribution pipelines near Baker, Montana. The proposed distribution lines would originate at the ExxonMobil truckline.

The applications of these three companies were compiled and analyzed as a single Proposed Action in the Bairoil/Dakota Carbon Dioxide Projects Draft EIS prepared by the BLM and issued in September 1985. The Bairoil/Dakota EIS also analyzed various alternatives to the Proposed Action including the Single Bairoil Pipeline Alternative, wherein only one of the two competing pipelines from the Rangely Pipeline near Green River to Bairoil Terminal and one of two $CO_2$ spur lines from Bairoil Terminal to Bairoil would be constructed.

The Exxon Wyoming-Dakota Pipeline Segment 2 and Hartzog Draw Unit $CO_2$ Projects EA analyzed the impacts of constructing and operating 155 miles of 20-inch $CO_2$ pipeline from the Bairoil Terminal to Hartzog. This project also included a gas gathering system and distribution system to injection wells. The EA was issued in March 1991, and the Record of Decision was signed in May 1991. Although some cultural resource mitigation was completed for this project, it was not constructed. As part of mitigation for the 1991 EA, cultural resource mitigation was implemented that involved reroutes at three sites: Trona Shed (MP 187.6 to MP 189.3), Morton Ranch (MP 172.8 to MP 173.9), and Loshe (MP 243.9 to MP 244.1) (Western Wyoming College 1991a,b,c). These reroutes are included as part of the Proposed Action for the PSC $CO_2$ Pipeline Project. PSC signed a memorandum of understanding with ExxonMobil and officially took over the project on November 30, 1998; PSC plans to construct and operate the $CO_2$ pipeline as discussed above. Due to the time interval between the 1991 EA and this proposal, BLM requires a new EA that contains updated information on all environmental resources.

## 1.3 Purpose and Need for the Proposed Action

The primary purpose of this proposed project is to transport $CO_2$ from the existing ExxonMobil pipeline terminus at the Bairoil Terminal to various oil fields for use in EOR processing. A secondary purpose is to market $CO_2$ produced at the existing ExxonMobil Shute Creek natural

gas processing plant near Opal, Wyoming, about 120 miles west of Bairoil Terminal, thus reducing $CO_2$ venting at the plant.

Initial volumes of $CO_2$ carried by the pipeline extension are projected to range from approximately 15 to 50 million standard cubic feet per day (MMSCFD). The long range outlook is for the pipeline to transport a total of 150 to 200 MMSCFD to future intermediate delivery points and along extensions to the system. However, there are many economic and technical factors that could affect the ultimate maximum throughput of $CO_2$ in this system.

Implementation of the EOR projects at the oil fields would result in increased incremental production of oil that would not be recoverable by existing operations. This incremental production would extend the economic life of the fields and benefit both state and local economies.

### 1.3.1 Value of Enhanced Oil Recovery

When an oil field is first discovered, it is typically brought into production using primary production methods where the natural pressure of the reservoir or pumping is used to bring oil to the surface. As the oil is produced, natural reservoir pressure declines over time, and there is a decrease in oil production from the field. Until the 1930s, primary production was the only practical means of production used in the United States. Under primary production, the ultimate recovery of oil is dependent on reservoir shape, permeability, and properties of the oil, as well as economic factors related to production costs versus rate of return. Typically, primary production results in the recovery of approximately 15 percent of the original-oil-in-place (BLM 1989). Once the natural reservoir pressure is sufficiently lowered, it may become economical to use secondary recovery techniques. Secondary recovery involves the injection of a fluid into the reservoir to replace the natural pressure lost during primary production. The most common type of secondary recovery used in Wyoming is waterflooding. Water is relatively inexpensive to obtain and inject and works well in displacing some oils from the reservoir and increasing reservoir pressure. Waterflooding was first applied 100 years ago, but it was not until the 1950s that it gained widespread use. Waterflooding can result in an incremental increase of up to 25 percent recovery, raising total recovery (primary and secondary) up to 40 percent of the original-oil-in-place. However, at the completion of secondary recovery, some 60 percent or more of the original oil still remains locked in the ground.

There are several types of enhanced (tertiary) oil recovery techniques currently being used throughout the United States. Johnson (1982) estimated that available EOR techniques could result in the addition of 18 to 53 billion barrels oil to our domestic reserves. Of these methods, $CO_2$ flooding shows the widest applicability and would likely result in the largest incremental oil recovery.

Enhanced oil recovery, and in particular $CO_2$ flooding, is expected to play a very important role in the future of Wyoming's oil industry. Basko (1987) estimated that Wyoming conservatively has 400 million barrels of recoverable enhanced oil. That is equal to about half of Wyoming's crude oil reserves (BLM 1989).

### 1.3.2 Use of $CO_2$ in Enhanced Oil Recovery

Carbon dioxide is a common, ordinary compound usually thought of as a gas, although it is quite easily converted to a solid or liquid. In its gaseous state, $CO_2$ is approximately 1.5 times heavier than air at standard conditions. Carbon dioxide can be hazardous in some situations. Frostbite may result from contact with dry ice or liquid $CO_2$. Carbon dioxide also can act as a simple asphyxiant. Concentrations of 10 percent (100,000 parts per million [ppm]) can produce unconsciousness from oxygen deficiency. A concentration of 5 percent (50,000 ppm) may produce shortness of breath and headache. Continuous exposure to 1.5 percent (15,000 ppm) may cause changes in some physiological processes (Sittig 1981).

Increased $CO_2$ concentrations in the atmosphere are believed to contribute to the greenhouse effect, and there is concern that massive increases in $CO_2$ emissions may potentially lead to global warming over time.

Injection of $CO_2$ to increase oil recovery was first patented in 1952. Large-scale commercial floods using $CO_2$ exist in Texas, Mississippi, Colorado, New Mexico, Oklahoma, and Wyoming. The first commercial application of $CO_2$ flooding in Wyoming was Amoco's Bairoil Project, which began injection of $CO_2$ in October 1986 (BLM 1989).

Carbon dioxide works to increase the volume of recoverable oil in a number of ways. In most reservoirs, $CO_2$ is easily miscible with the oil and can be thoroughly mixed at relatively low pressures. Once mixed, it is highly soluble. As it dissolves, it swells the oil, yielding a 10 to 30 percent increase in volume (Miller and Jones 1981). This swelling forces more oil out of the reservoir pores, making it available for recovery. In addition, $CO_2$ decreases the viscosity of oil, allowing it to flow more freely. $CO_2$ also aids recovery by solution gas drive. Just as $CO_2$ goes into solution with an increase in reservoir pressure, gas will come out of solution and continue to drive oil into the wellbore. Finally, the slightly acidic nature of the $CO_2$-water mixture promotes certain injectivity changes. Clays are stabilized due to a reduction in pH, and injectivity is improved in carbonates by partially dissolving the reservoir rock and increasing permeability. In certain cases, $CO_2$ also may reduce permeability.

Flooding an oil reservoir with $CO_2$ utilizes the same type of equipment and processes installed for waterflooding. During $CO_2$ flooding, the gas is injected into the reservoir through a series of

injection wells. After a slug of $CO_2$ large enough to maintain a solvent bank between the $CO_2$ and the oil is injected, a slug of water is introduced behind the $CO_2$. The alternating injection of $CO_2$ and water is referred to as water alternating gas process. The water pushes the $CO_2$ slug and oil bank to the producing wells where it can be recovered.

## 1.4 Location of the Proposed Action

The $CO_2$ Pipeline Project proposed by PSC would be located in four Wyoming counties (Fremont, Natrona, Johnson, and Campbell) and three BLM Field Office areas (Lander, Casper, and Buffalo). A map showing the location of the proposed pipeline route is presented in Figure 1-1.

## 1.5 Authorizing Actions

PSC's proposed project would require federal, state, and local authorizations for many aspects of project construction, operation, maintenance, and abandonment. It is the applicant's intent to fulfill all requirements of any applicable statutes, regulations and policies. Table 1-1 lists permits, approvals, and reviews necessary for implementation of the Proposed Action.

In order to obtain a ROW grant from federal land management agencies or easements across private land, several steps must be taken. For federally administered lands, an applicant must submit a ROW application to the appropriate federal agency along with a processing fee to cover the costs of processing the application and granting and administering the ROW. The agency then prepares an environmental document (such as this EA) as required under NEPA to determine potential impacts on all lands (regardless of ownership) that may occur as a result of implementing the Proposed Action.

Mitigation of adverse impacts is proposed by the applicant as part of the project design. In addition to these commitments, the agency requires standard protective measures on federal lands.

After the EA is prepared and the agency preferred alternative is selected, the BLM prepares a Decision Record. The Decision Record documents and provides the legal record for any decisions made regarding the requested ROW on federal lands.

Before the ROW can be granted, PSC must prepare a Plan of Development (POD) detailing construction of all project facilities on federal land. This POD must be submitted to the authorizing agencies for approval. POD approval is concurrent with the ROW approval. The POD contains site-specific procedures based on the types of terrain, soils, vegetation, land use, and climatic conditions encountered for the following areas of concern:

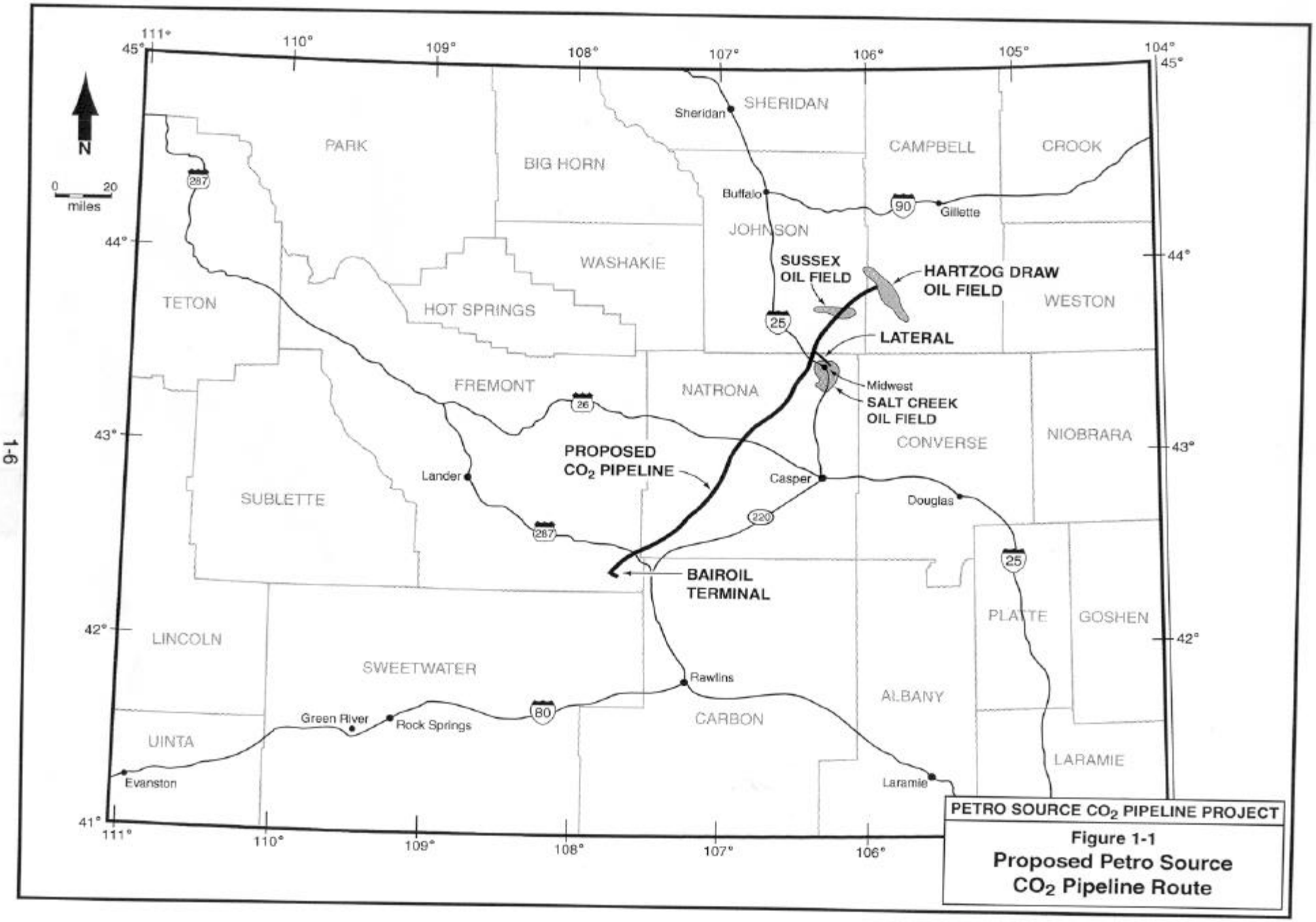


PETRO SOURCE $CO_2$ PIPELINE PROJECT

**Figure 1-1**
**Proposed Petro Source $CO_2$ Pipeline Route**

**Table 1-1**
**Federal, State, and Local Permits, Approvals, and Reviews Required for Construction and Operation of the Proposed PSC $CO_2$ Pipeline Project**

| Agency | Nature of Action | Authority |
|---|---|---|
| FEDERAL PERMITS, APPROVALS, AND REVIEWS | | |
| U.S. Department of the Interior Bureau of Land Management | Grant rights-of-way and issue temporary use permits | Section 28 of the Mineral Leasing Act of 1920 |
| | Issue materials sales contracts | Materials Act of 1947, as amended; 30 U.S.C. 601, 602; 43 CFR 3600 |
| | Issue antiquities and cultural resource use permit to excavate or remove cultural resources on federal lands | Antiquities Act of 1906, 16 U.S.C. Section 431-433; Archaeological Resources Public Protection Act of 1979, 16 U.S.C. Section 470aa-47011; 43 CFR Part 3 |
| | Approve pesticide use proposal | BLM Manuel 9011.1, Guidelines for Conducting Chemical Pest Control Program |
| U.S. Fish and Wildlife Service | Section 7 Consultation process for endangered or threatened species | Endangered Species Act of 1973; 16 U.S.C. 1531 et seq. |
| U.S. Department of Transportation Federal Highway Administration (DOT) | Issue permits to cross federal-aid highways | 23 U.S.C. Sections 116, 123, 23 CFR Part 645 Subpart B |
| U.S. Department of the Army Corps of Engineers | Issue Section 404 permit for placement of dredged or filled material in waters of the United States | Section 404 of the Clean Water Act of 1972 (40 CFR 122-123); 33 U.S.C. Section 1344; 33 CFR Parts 323, 325 |
| | Issue Section 10 permit for crossing navigable water in the United States | Section 10 of the Rivers and Harbors Act of 1899, 33 U.S.C. 401-413 |
| U.S. Department of the Treasury Bureau of Alcohol, Tobacco and Firearms | Issue permits to purchase, store, and use explosives | Section 1102(a) of the Organized Crime Control Act of 1970, 18 U.S.C. Section 841-848; 27 CFR Part 181 |
| Advisory Council on Historic Preservation | Review and compliance activities as defined in the MOA | Section 106 National Preservation Act (16 U.S.C. 470) (36 CFR Part 80) |

## Table 1-1 (Continued)

| Agency | Nature of Action | Authority |
|---|---|---|
| STATE OF WYOMING | | |
| Department of Environmental Quality – Water Quality Division | Issue National Pollution Discharge Elimination System Permit for discharges; prepare Storm Water Pollution Prevention Plan | Wyoming Environmental Quality Act, W.S. 35-11-301 |
| Wyoming Highway Department | Issue permits for oversize and overweight loads | Chapters 17 and 20 of the Wyoming Highway Department Rules and Regulations |
| | Issue encroachment permits | Chapter 12 of the Wyoming Highway Department Rules and Regulations |
| State Land Board | Issue easements to cross state lands | W.S. 35-20 and 36-20 |
| Wyoming State Engineer's Office | Grant permit to appropriate water for hydrostatic testing, dust control, and other uses | W.S.41-121 through 147 |
| State Historic Preservation Office | Review and compliance activities as defined in the Memorandum of Agreement | Section 106 National Preservation Act (16 U.S.C. 470) (36 CFR Part 80) |
| Wyoming Public Service Commission | Issue certificate of public convenience and necessity | W.S. 1977 and Wyoming Administrative Procedures Act |
| County Commissioners | Road crossing permits, land use permits, and licenses | County zoning regulations |
| County Health Departments | Temporary sanitation facilities | County sanitation requirements |

- Engineering proposals and construction drawings
- Fire protection
- Erosion control, revegetation, and restoration
- Water resources
- Transportation
- Communications
- Cultural resources
- Threatened or endangered species
- Wildlife mitigation
- Blasting
- Dust control
- Weed control
- Health and safety
- Construction schedule
- Construction facilities and housing
- Pipeline testing
- Construction monitoring
- Operations and maintenance
- Abandonment

Prior to construction, the applicant would be required to conduct site-specific surveys on the proposed ROW, temporary use areas (TUAs), and ancillary facilities for sensitive plants and animals, including threatened and endangered species and federally protected raptors; jurisdictional wetlands and waters of the U.S.; cultural, historical, and paleontological resources; noxious weeds and topsoil stripping depths. The BLM then applies stipulations to protect site-specific resources. When possible, these stipulations are incorporated into the POD.

The process used by pipeline companies to obtain easements across private lands is different from that used for state or federal lands. The company's ROW agent first contacts the landowner for permission to determine the proposed pipeline's centerline across the owner's property. At the same time, the ROW agent seeks the landowner's permission to conduct the same surveys required to obtain permits to cross federal and state lands (such as cultural and wildlife surveys).

A plat is prepared after the surveyor obtains the necessary data for locating the pipeline. This plat shows the relationship of the planned pipeline to the property boundaries. The ROW agent again meets with the landowner to initiate negotiations for an easement across the property.

Across federal, state and private lands, PSC has requested a 30-foot-wide permanent easement and an additional 45-foot-wide temporary construction easement on level terrain. Temporary use areas would be required at crossings of the Sweetwater River, highways (287, 20/26 etc.), and railroads. Construction techniques and rehabilitation procedures would be the same on private and public lands, or as specified by the landowner.

## 1.6 Conformance with Land Use Plans

The proposed project would be located within the BLM's Lander, Casper, and Buffalo Field Office areas, each of which has an approved Resource Management Plan (RMP) (BLM 1984a,1985c, 1986b). The Proposed Action is in conformance with these plans. In addition, the proposed project is in conformance with designated corridors. None of the project disturbance area is located within areas where ROWs are prohibited. The RMPs do identify restrictions on ROW placement (e.g., Interstate 25 [I-25] segments). However, linear projects are allowed to cross I-25. Specific land use plan and applicable statutory/regulatory information is provided in Chapter 3.0.

## 1.7 Project Interrelationships

### 1.7.1 Interrelated Projects

Development of the PSC $CO_2$ Pipeline Project would be related to EOR activities at the Salt Creek, Sussex, and Hartzog Draw oil fields (see Figure 1-1). EOR in the Salt Creek and Sussex oil fields would be initiated during the Phase I portion of the PSC $CO_2$ Pipeline Project, while activities in the Hartzog Draw field would occur during Phase II. Initially, the following operators would be the first to implement EOR activities at their wells: ExxonMobil (Hartzog Draw), Howell (Salt Creek), and Westport (Sussex). After 2 or 3 years, other operators with active wells may include the EOR process as part of their operation. A summary of recent production in these fields is provided in Table 1-2.

**Table 1-2**
**Summary of Oil Production in the Salt Creek, Sussex, and Hartzog Draw Oil Fields**

| Oil Production Information | Salt Creek | Sussex | Hartzog Draw |
|---|---|---|---|
| Number of Producing Wells in 1999 | 841 | 24 | 151 |
| Production Initiated (Year) | 1889 | 1948 | 1976 |
| Barrels of Oil Produced in 1999 | 2,035,382 | 135,992 | 2,297,211 |
| Barrels of Oil Produced Since Inception | 659,473,013 | 71,377,274 | 100,312,401 |

Source of Information: Wyoming Oil and Gas Commission (1999).

Based on discussions with major operators in the fields (Nelms 2000; Geiger 2000), construction activities would be limited to previously disturbed land. The types of changes that would occur in each of the oil fields as a result of the construction activities include the following:

- Aboveground pipeline (2- to 6-inch diameter) connection to the $CO_2$ source;
- New buried injection lines (2- to 6-inch diameter steel);
- New buried gathering lines (6-inch steel for water and 6-inch steel for gas);
- New buried return gathering line (10- to 20-inch fiberglass for $CO_2$ gas);
- New $CO_2$ distribution header (approximately 40 feet x 40 feet);
- New $CO_2$ processing plant; and
- New compressor station.

Trenching would be required for the injection and gathering lines, with the depth of approximately 4 to 6 feet and width of 1 to 2 feet. No new roads would be required as part of the EOR process.

New activities associated with operation activities in these fields would result from the $CO_2$ processing plant. Since the EOR activities would occur at existing active wells, no new development would occur. Current production and vehicle traffic would occur within each field.

### 1.7.2 Special Management Areas

The proposed $CO_2$ pipeline route would pass within less than 100 feet of the BLM's Miller Springs and Split Rock Wilderness Study Areas (WSAs), previously called the Sweetwater Rocks WSAs (MP 134 to 140) in Natrona County, Wyoming (see Chapter 3.0). These areas were evaluated in the Lander Final Wilderness Environmental Impact Statement (BLM 1990), and both areas were recommended for nonwilderness uses.

The pipeline also would pass through the Green Mountain and Salt Creek Areas of Critical Environmental Concern (ACEC). See Chapters 3.0 and 4.0, Land Use and Recreation, for additional discussion of these special management areas.

# 2.0 DESCRIPTION OF THE PROPOSED ACTION AND ALTERNATIVES

## 2.1 Introduction

The Proposed Action analyzed in this EA consists of the extension of the existing Wyoming-Dakota $CO_2$ pipeline from the Bairoil Terminal to the Hartzog Draw Unit well field. A 7-mile lateral also would be constructed to the Salt Creek Unit near Midwest, Wyoming. Construction of the Proposed Action would require approximately 1,497 acres, an estimated 1,492 acres would be reclaimed immediately following project construction. No new disturbance would be required for the use of access roads. Table 2-1 provides information on land requirements for both the pipeline and temporary work areas, as part of the Proposed Action. All disturbance, with the exception of the block and take-off valves and the measurements facilities, would be reclaimed after abandonment.

Construction of the proposed $CO_2$ pipeline would be scheduled to occur beginning in August 2001 and ending in late January 2002 for MP 112 to MP 240. The north portion of the route (MP 240 to MP 267) would be constructed during the same period or completed 1 to 3 years later (same months). The spread would require an average of approximately 210 workers. Table 2-2 lists the construction worker requirements broken down by job classification. Most of the unskilled laborers (approximately 25 percent of the total work force) would be hired locally. The limited level of local workers is mainly due to demand for coal bed methane activities. Skilled laborers, such as pipeline welders, would be hired locally or brought in from outside the area, depending on availability.

Bus transportation is expected to be provided by the pipeline contractor from Casper. Local resident workers from other parts of the area would be expected to supply their own transportation to the work site; they would not be expected to report to Casper. It is assumed that up to 50 percent of the workers (98) would drive personal vehicles or work vehicles (e.g., welding truck, foreman's pickups ) to the work site. At 1.8 persons per vehicle (BLM 1985a), 105 workers would generate 58 vehicle trips during the morning and afternoon peak hours. The remaining 105 workers would require 2 to 3 bus trips from Casper. Additional details on the transportation plan is provided in Appendix E in the POD.

The PSC $CO_2$ Pipeline Project would be designed and constructed in two phases. The first phase would involve constructing and operating the main route from MP 112 to MP 240 (Sussex Oil Field) and the lateral route. The second phase would include the north end of the route from MP 240 to MP 267 (Hartzog Draw Oil Field). The entire main route and lateral are analyzed in this EA.

**Table 2-1**
**Acres Disturbed, Removed, and Reclaimed by the Proposed PSC $CO_2$ Pipeline Project**

| Component/Facility | Acres Disturbed | Acres Removed | Acres Reclaimed[1] |
|---|---|---|---|
| **Main Route** | | | |
| $CO_2$ Pipeline, 155 miles[2] | 1,409.1 | 0.0 | 1,409.1 |
| Block Valves and Take-off Valves, 9 @ 0.1 acre | 0.9 | 0.9 | 0.0 |
| Measurement Facilities with Scraper Traps, 4 @ 1 acre | 4.0 | 4.0 | 0.0 |
| Temporary Use Areas | 21.0 | 0.0 | 21.0 |
| *Main Route Total* | 1,435.0 | 4.9 | 1430.1 |
| **Salt Creek Lateral** | | | |
| $CO_2$ Supply Line - [6.8] miles[3] | 61.8 | 0 | 61.8 |
| Overall Total | 1496.8 | 4.9 | 1,491.9 |

[1]These are acres reclaimed immediately following project construction; all areas would be reclaimed after abandonment.
[2]Assumes construction disturbance width of 75 feet: disturbance may be slightly wider on sidehill locations and narrower on flat ground using disturbance minimization techniques.
[3]Assumes construction disturbance width of 75 feet.

**Table 2-2**
**Estimated Construction Worker Requirements for the Proposed PSC $CO_2$ Pipeline Segment**

| Worker Classification | August 2001- late January 2002 |
|---|---|
| **Pipeline Construction Spread** | |
| Foreman | 10 |
| Machine Operators | 60 |
| Welders/Helpers | 48 |
| Mechanics | 10 |
| Surveyors | 6 |
| Technicians | 12 |
| Laborers | 64 |
| Total | 210 |

## 2.2 Proposed Action

### 2.2.1 Description of Facilities

PSC (the applicant) of Houston, Texas, proposes to construct approximately 155 miles of 12-inch carbon dioxide pipeline from a point in Township 27 North (T27N), Range 92 West (R92W), Section 4 at the Bairoil Terminal of the existing Wyoming-Dakota $CO_2$ Pipeline segment to a point in the Hartzog Draw Field, T45N, R76W, Section 2. A 7-mile, 8-inch diameter lateral (MP L0 to L7) would be constructed from the main route at T41N, R80W, Section 25, to a point located near the Salt Creek Unit at T40N, R79W, Section 15. The proposed pipeline would transport $CO_2$ as a dense-phase fluid to the Sussex, Salt Creek, and Hartzog Draw fields for a proposed EOR project and to other delivery points when markets develop. Major components of the PSC $CO_2$ Pipeline Project include:

- $CO_2$ Pipeline;
- Scraper Traps, Block Valves, and Takeoff Valves; and
- $CO_2$ Measurement Facilities.

All facilities in this system would be designed, constructed, operated and maintained in accordance with Department of Transportation (DOT) Title 49 CFR Part 195, Transportation of Hazardous Liquids by Pipeline, and American National Standards Institute (ANSI) B31.4, Liquid Petroleum Gas, Anhydrous Ammonia, and Alcohols.

#### 2.2.1.1 $CO_2$ Pipeline

The proposed route would parallel other pipelines, electric power distribution lines, or roads for approximately 50 miles or 31 percent of the total pipeline length. The proposed pipeline would traverse private, state, and federal lands. Approximately 24 percent of the route would be on private lands, 22 percent on state lands, and 54 percent on federal lands. An overview of the pipeline route is presented in Figure 1-1. Maps of the pipeline route shown at a scale of 1 to 500,000 are provided in Figures 2-1 and 2-2.

The $CO_2$ would be delivered to Hartzog Draw at a pressure ranging from 1,500 to 1,800 pounds per square inch (psi). The transported gas would be no less than 96 percent $CO_2$, contain not more than 30 pounds of water per 1,000,000 standard cubic feet (3 percent), and contain no more than 35 grains total sulfur per 100 standard cubic feet (less than 1 percent).

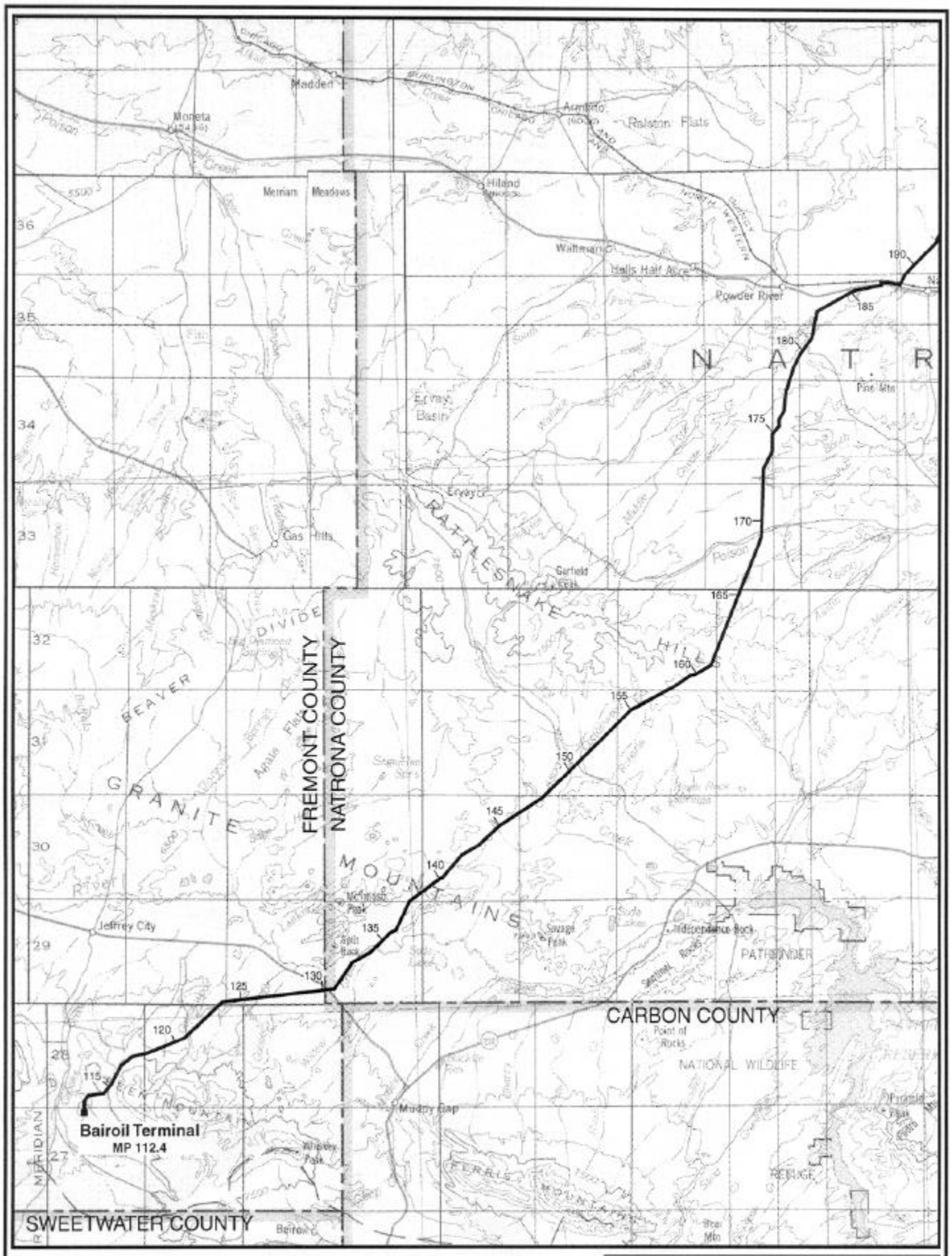


PETRO SOURCE $CO_2$ PIPELINE PROJECT

**Figure 2-1**

**Southern Portion of Proposed PSC $CO_2$ Pipeline Route**

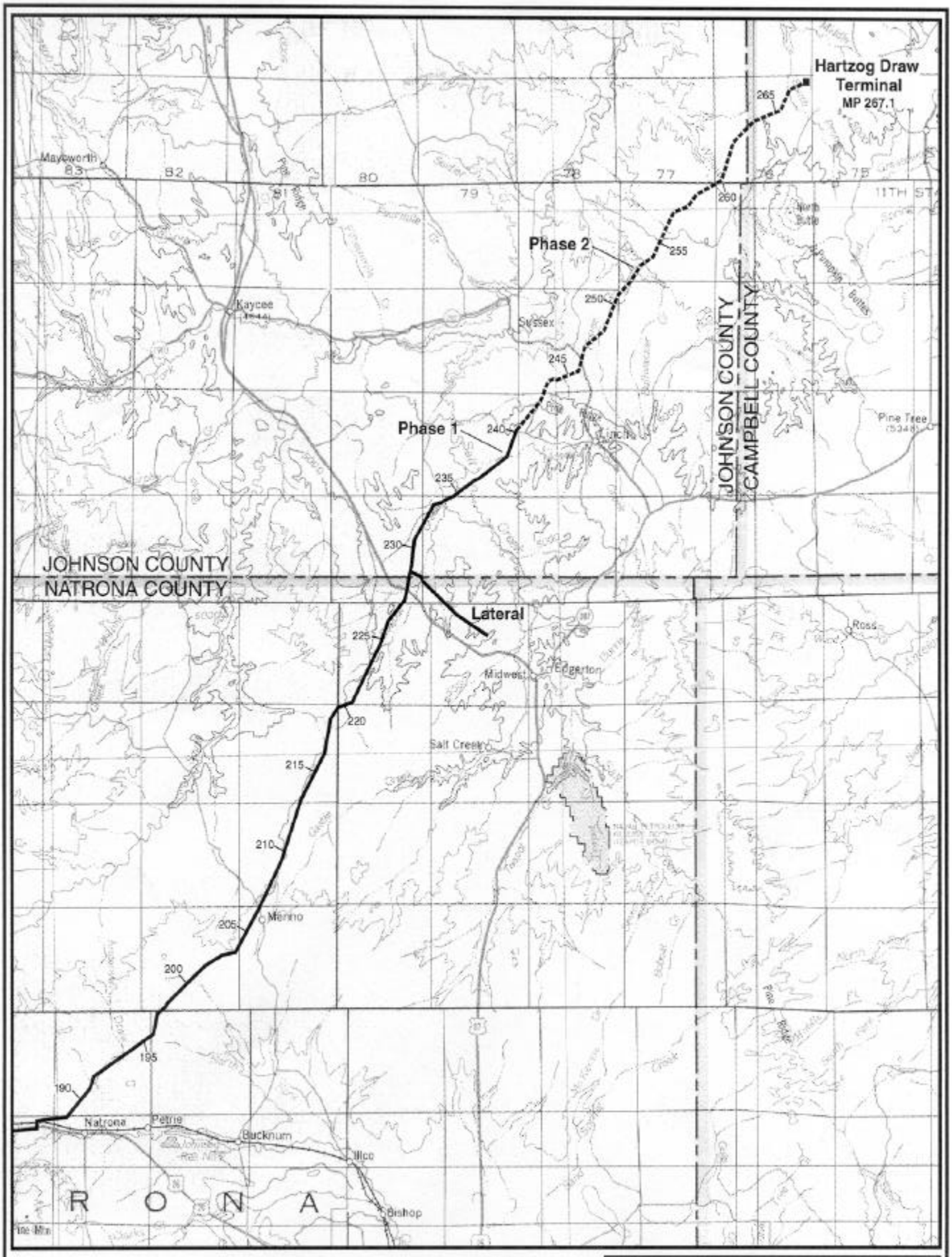


PETRO SOURCE $CO_2$ PIPELINE PROJECT

**Figure 2-2**

**Northern Portion of Proposed PSC $CO_2$ Pipeline Route**

Initially, approximately 15 to 50 MMSCFD would be transported through the buried pipeline. Pipeline route markers would be installed at road crossings, water crossings, property boundaries, and other pipeline crossings in locations where such markers would not interfere with existing land uses. Aerial markers would be installed at intervals along the route and at turning points, where possible, to facilitate periodic aerial patrol of the pipeline.

Based on an analysis of gradient and flow requirements for transporting the $CO_2$ product, Universal Ensco determined that pumping facilities would not be required for Phase 1 or 2. A hydraulics model was used in this analysis.

A pipe yard work area would be used to store and potentially coat pipe prior to transport to the ROW. This 101-acre site, which is located 5.5 miles northwest of Casper, Wyoming (between NW 1/4 and SW 1/4 of Section 33, T35N, R80W), has been previously used as a pipe work area. Pipe would be transferred to the yard via the Burlington Northern railroad or truck. After the coating process is completed, the pipe would be transported to the ROW by truck using highways 20/26 (southern portion) and 25/87 (lateral and northern portion). Pipe transport would occur during a 2-month period. The estimated number of trucks per day for pipe transport would be 5 to 6 during a 2-month period.

#### 2.2.1.2 Scraper Traps, Block Valves, and Takeoff Valves

Scraper traps, which include block valves, would be installed at the beginning of the pipeline, one at Sussex (to be relocated to Hartzog during Phase II), and one at each end of the Salt Creek lateral line. A scraper launcher would be installed at the Bairoil Terminal at MP 112. Additionally, a scraper receiver would be installed at the Hartzog Draw Terminal at MP 267. A typical scraper trap detail is shown in Figure 2-3. Block valves would be installed at approximately 20-mile intervals along the entire length of the pipeline. Figure 2-4 presents a typical block valve configuration. Additional takeoff valves would be installed at potential future delivery locations. Figure 2-5 illustrates a typical takeoff valve installation. Scraper traps, block valves, and/or takeoff vales would be located as shown in Table 2-3. Each scaper trap, block valve, and takeoff valve area would be graveled and enclosed using a chain link fence. The disturbance area at each site is listed in Table 2-1. Access would be year-round depending upon winter weather.

#### 2.2.1.3 Meter Terminal

The Hartzog Draw Meter Terminal would be constructed on a 1-acre site located approximately 10 miles west of Savageton, Wyoming. The site would consist of a meter building (35 feet wide x 75 feet long x 24 feet height), receiving scrapers trap, flow control valve, communications and satellite dish, $CO_2$ vent, and an electric service pole with a pad-mounted transformer. A 72-inch

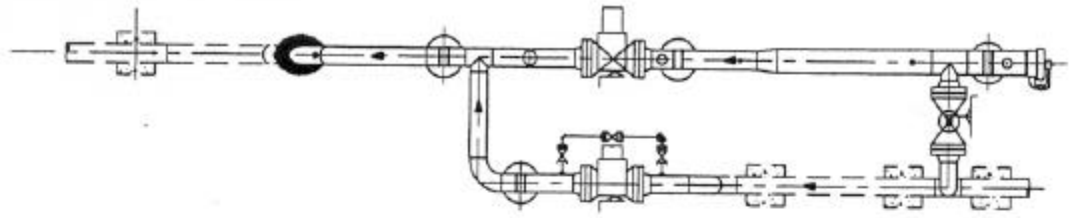

PLAN
N.T.S.

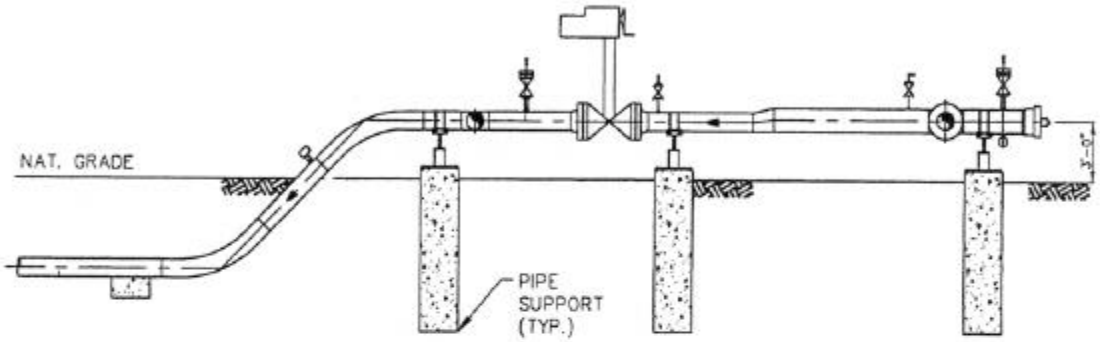


ELEVATION
N.T.S.

Scraper Launcher

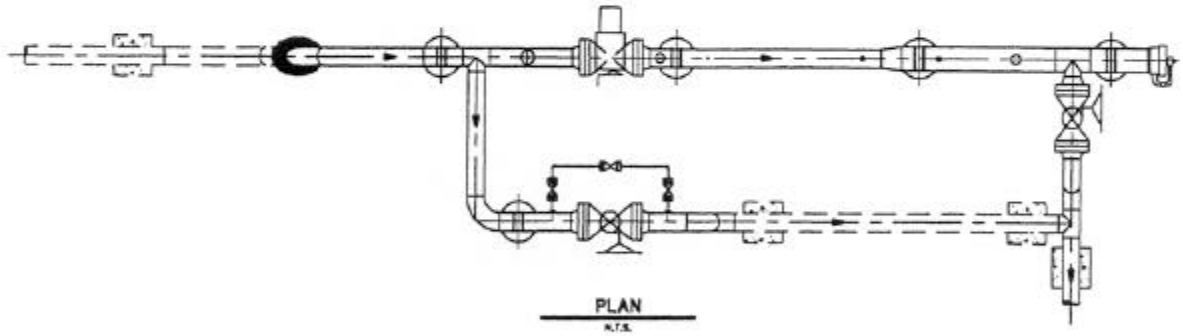

PLAN
N.T.S.

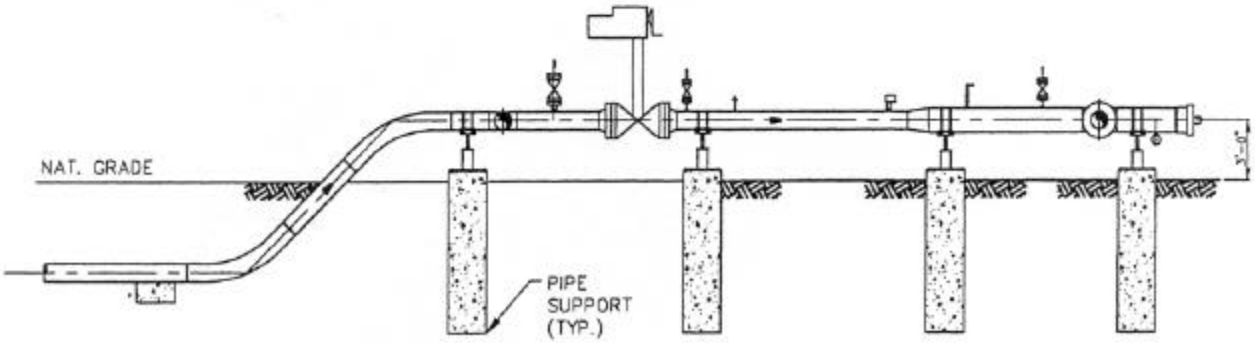


ELEVATION
N.T.S.

Scraper Receiver

PETRO SOURCE $CO_2$ PIPELINE PROJECT

**Figure 2-3**

**Typical Scraper Trap Installations**

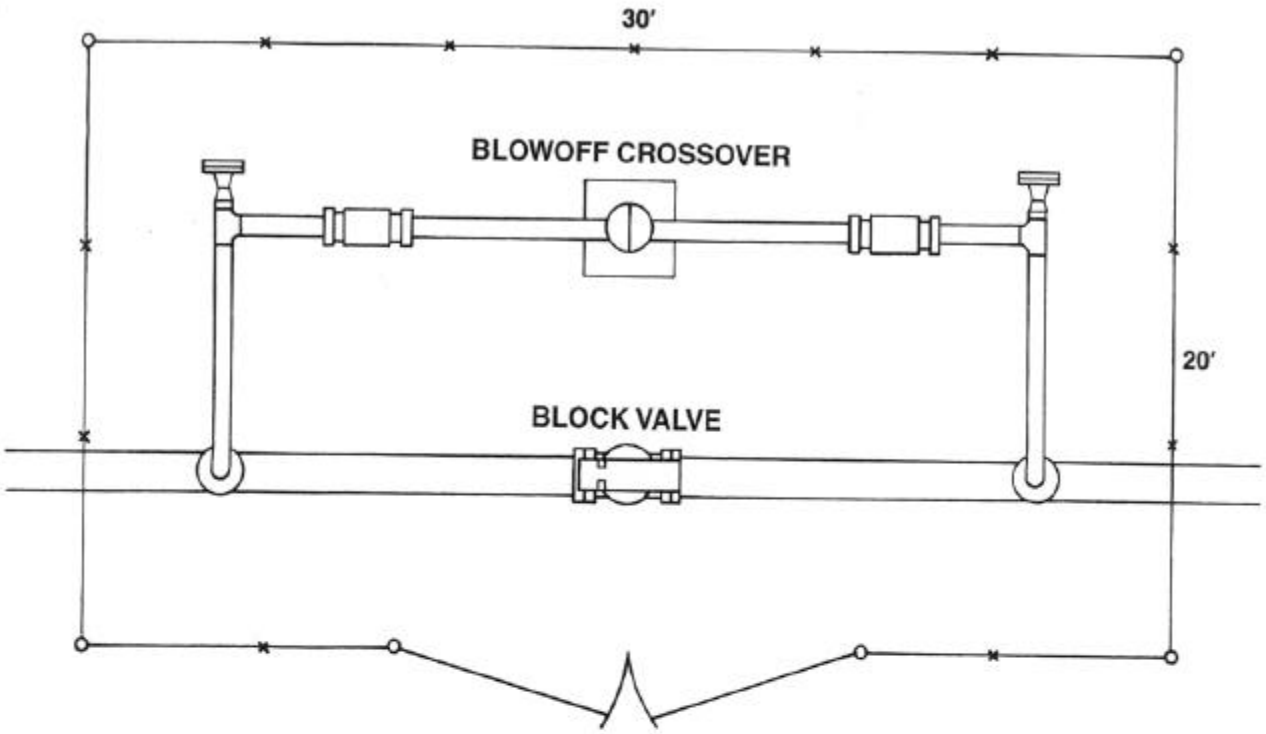


PLAN

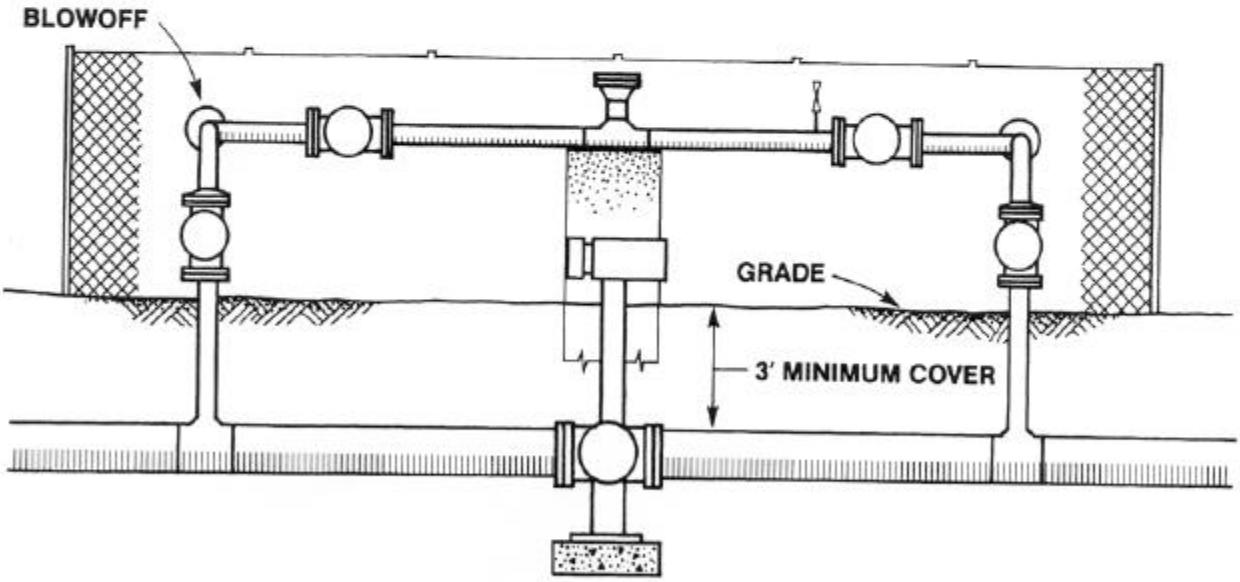


ELEVATION

Not To Scale

PETRO SOURCE $CO_2$ PIPELINE PROJECT

Figure 2-4

**Typical Block Valve Configuration**

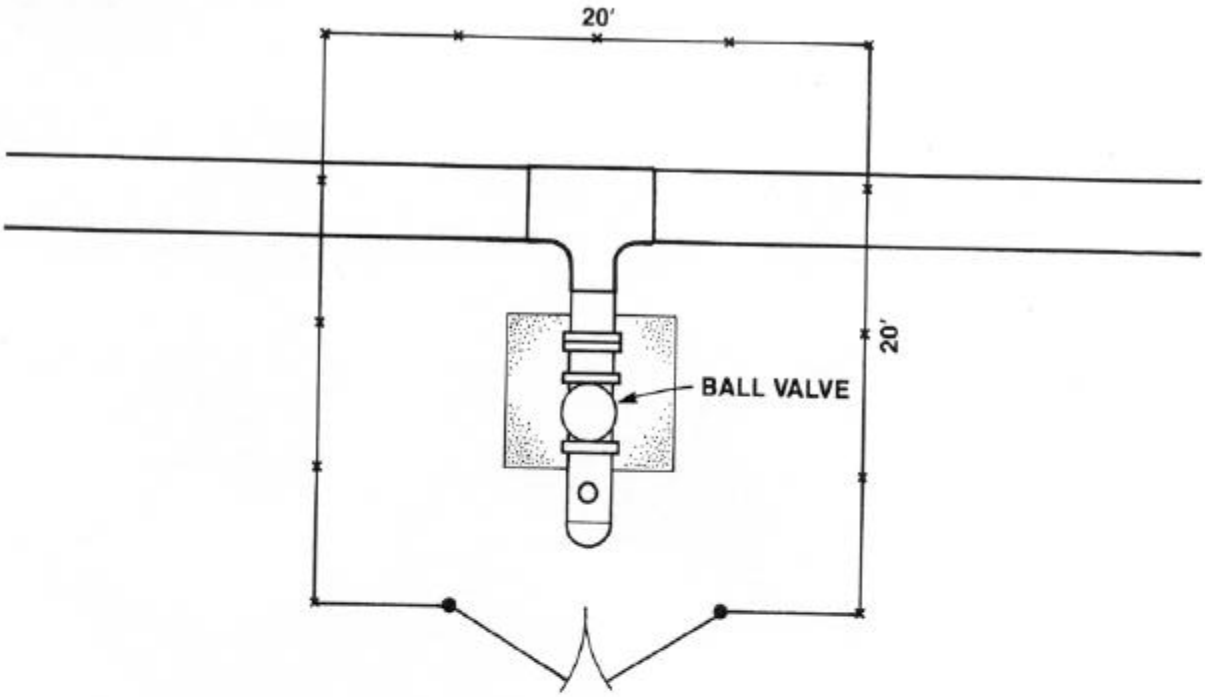


**PLAN**
Not To Scale

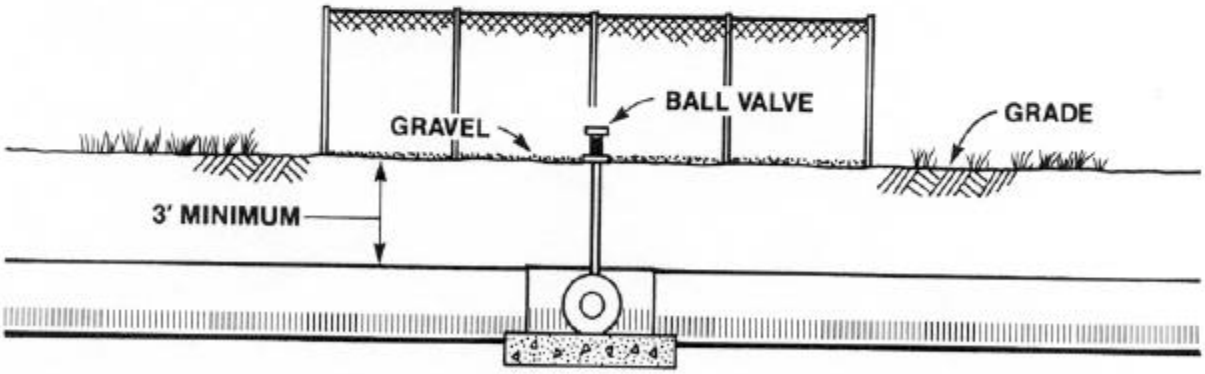


**ELEVATION**
Not To Scale

PETRO SOURCE $CO_2$ PIPELINE PROJECT

Figure 2-5

**Typical Take Off Installation**

**Table 2-3**
**Location of Scraper Traps, Block Valves, and Takeoff Valves for the Proposed PSC $CO_2$ Pipeline**

| Type | Mile Post | Location |
|---|---|---|
| Scraper Launch Trap at Bairoil Terminal/ Block Valve | 112.4 | NW 1/4, Sec 4, T27N, R92W |
| Block Valve | 131.9 | NW1/4, Sec 29, T29N, R89W |
| Block Valve | 150.8 | NW 1/4, Sec 27, T31N, R87W |
| Block Valve | 169.0 | SW 1/4, Sec 15, T33N, R85W |
| Block Valve | 183.0 | SE 1/4, Sec 4, T35N, R84W |
| Block Valve | 206.5 | NW 1/4, Sec 5, T37N, R82W |
| Block and Takeoff Valves | 222.9 | SW 1/4, Sec 21, T40N, R80W |
| Side-lateral Valve | 229.0 | NW 1/4, Sec 25, T41N, R80W |
| Block and Takeoff Valves | 240.1 | NE 1/4, Sec 13, T42N, R79W |
| Sussex Scraper Trap (temporary) | 240.1 | NE 1/4, Sec13, T42N, R79W |
| Block and Side Valve | 259.6 | NE 1/4, Sec 1, T44N, R77W |
| Scraper Receipt Trap at Hartzog Draw Terminal (moved from Sussex) | 267.1 | SW 1/4, Sec 2, T45N, R76W |
| Salt Creek Scraper Trap/Block Valve | L.0 | NW 1/4, Sec 25, T41N, R80W |
| Salt Creek Scraper Trap/Block and Side Valve | L7.0 | SE 1/4, Sec 15, T40N, R79W |

high, brown, plastic-coated chain-link security fence would be installed around the facility. The meter building contains a control room, metering facilities, and a 5-ton crane. The control room contains equipment for local and remote operation of the system. A diagram of the facility is provided in the POD (Appendix A).

#### 2.2.1.4 Measurement Facilities and Supervisory Control and Data Acquisition (SCADA) System

Measurement facilities would be built initially at Bairoil, Salt Creek, Sussex, and later at future intermediate delivery points as they are developed. Measurement facilities are shown in Figures 2-6, 2-7, and 2-8, which also are representative of future delivery facilities. Each measurement facility area would be graveled and enclosed with a chain-link security fence. The disturbance area would be approximately 1 acre at each of the facilities. Access would be year-round at 1 week intervals.

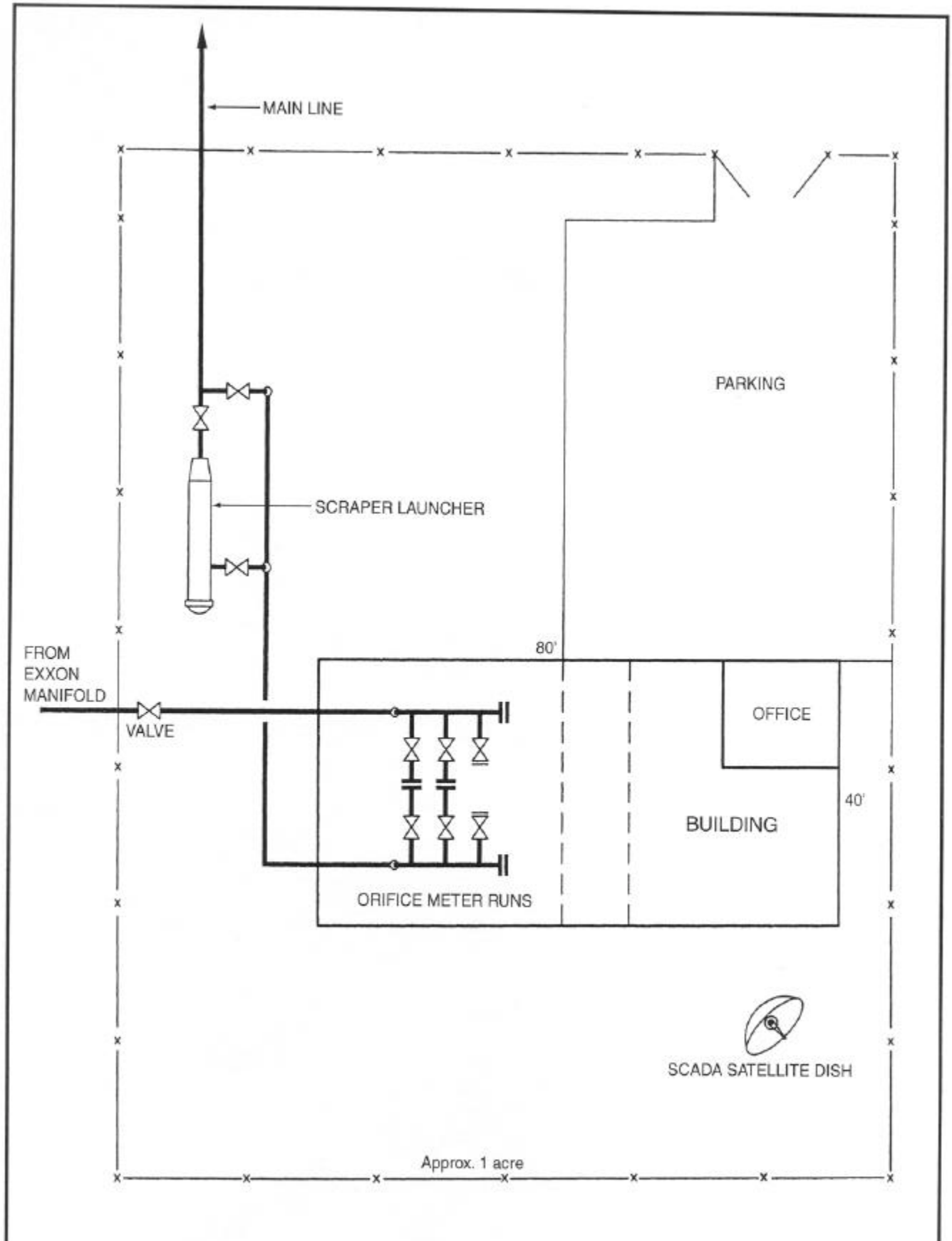


PETRO SOURCE $CO_2$ PIPELINE PROJECT

**Figure 2-6**
**Bairoil Measurement Facility**

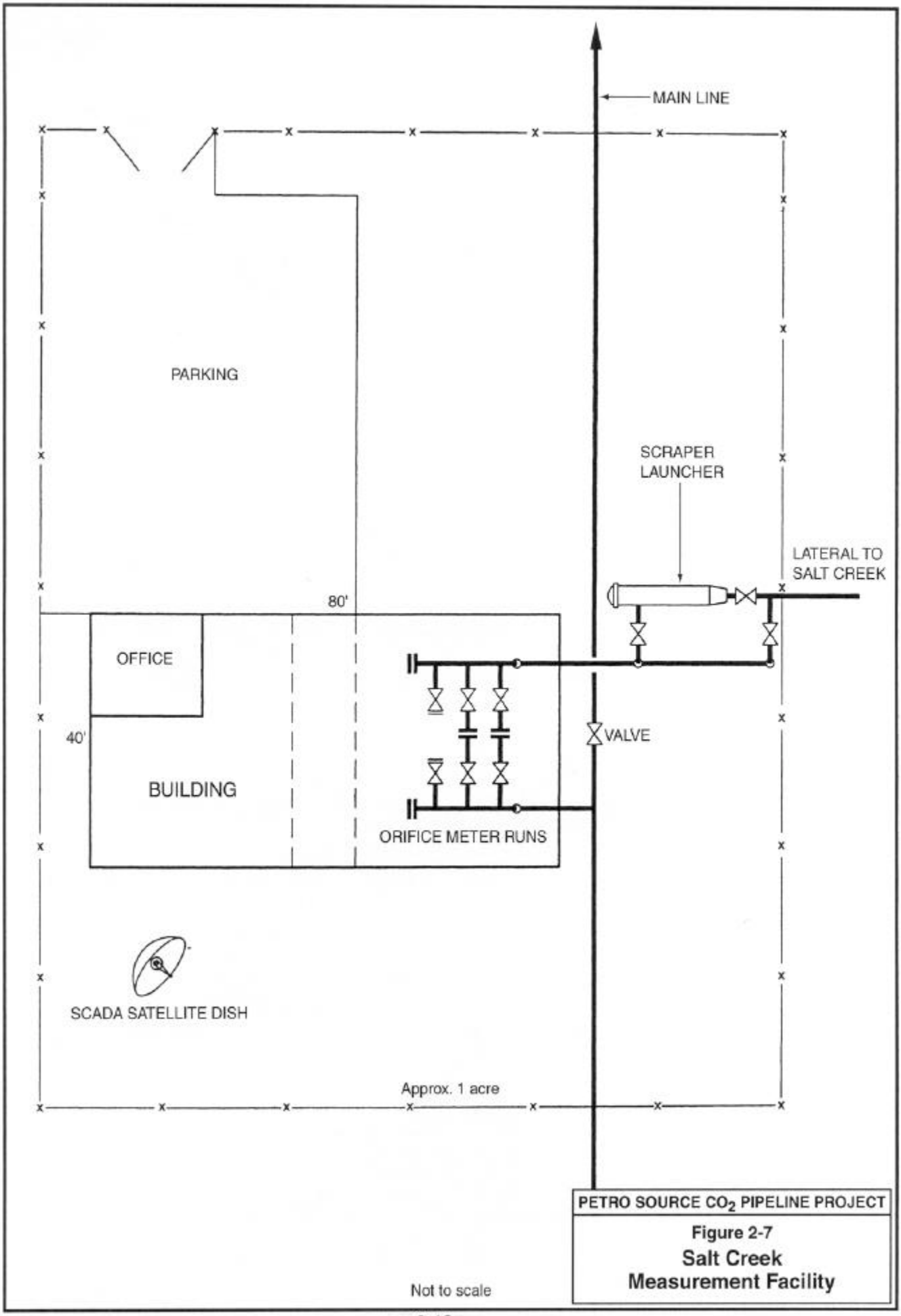


PETRO SOURCE $CO_2$ PIPELINE PROJECT

**Figure 2-7**
**Salt Creek Measurement Facility**

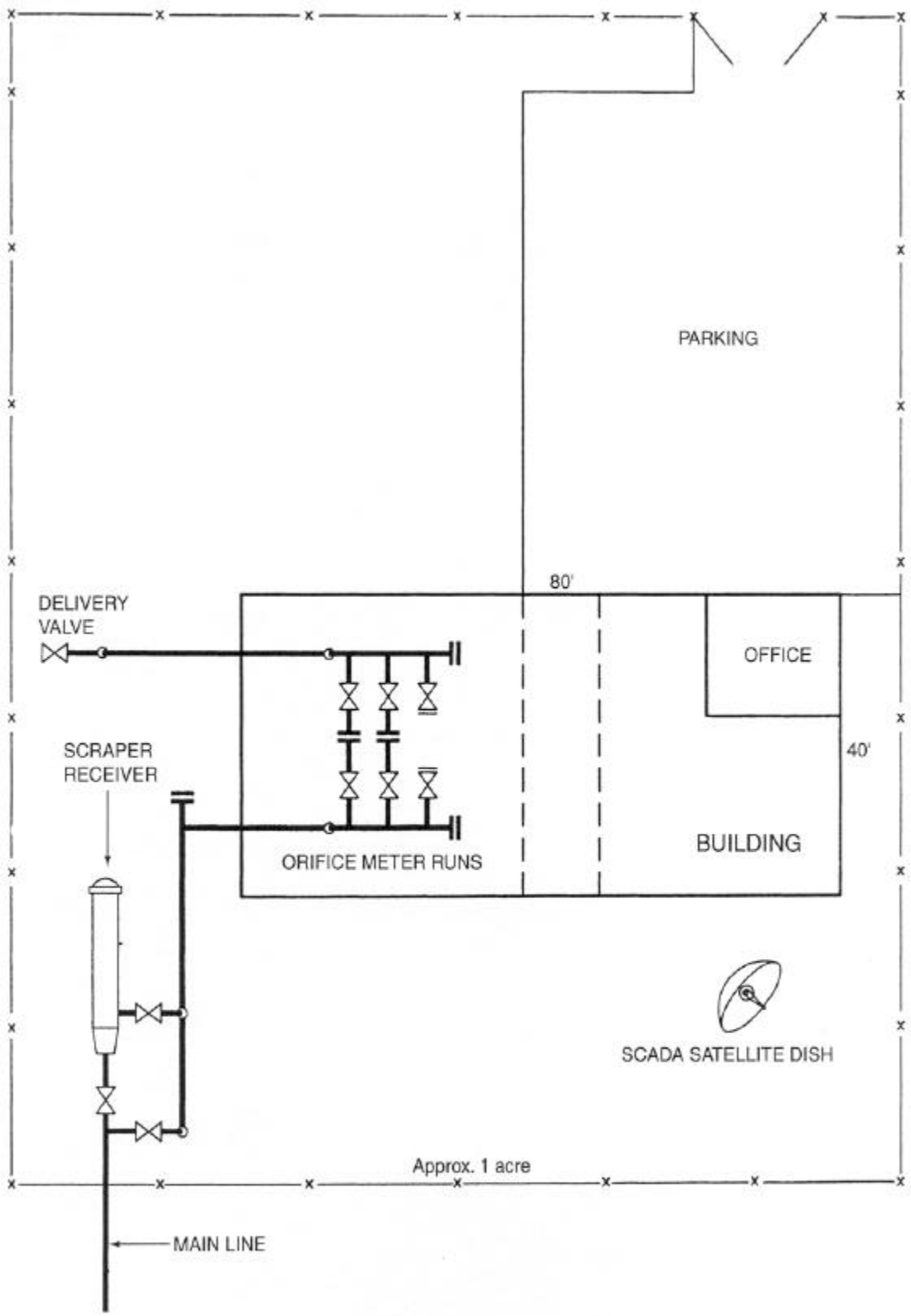


**PETRO SOURCE $CO_2$ PIPELINE PROJECT**

**Figure 2-8**

**Sussex Measurement Facility**

Not to scale

The SCADA System located at the measurement facilities would provide continuous operating data. Pressure, temperature, flow rate, totalizing flow, pressure alarms, and status alarms would be transmitted via satellite to the control center.

#### 2.2.1.5 Corrosion Protection

The pipeline would be cathodically protected by the coating, rectifiers, and anodes. Rectifiers would be located near power distribution lines and mounted on a pole adjacent to the ROW; associated anodes would be buried. The exact locations of these cathodic protection devices cannot be determined until the pipeline is installed and the proper tests conducted. If possible, the rectifiers would be placed at the measurement facility sites. Test leads would be attached to the pipeline at fence lines, other pipeline crossings, roads, and highways to monitor the cathodic protection system. Each set of test leads would be brought to the junction box monitored nearby on a short post. The post and junction box would be installed where it would not interfere with existing land uses.

### 2.2.2 Construction

Pipeline construction techniques for a $CO_2$ pipeline are the same as for conventional pipelines. The pipeline would be laid in a continuous operation known as a spread, consisting of equipment and crews handling various phases of construction activities. It is anticipated two large spreads would be used to construct the PSC pipeline. Construction would be expected to progress at a total average rate of approximately 2.5 to 4 miles per day.

As part of the EA process, PSC has developed a detailed POD, which would become part of any ROW approved by the BLM. The POD addresses the specific details of the project construction, reclamation, and site-specific environmental protection measures along each mile of the route. This EA provides a discussion of project construction and operation, with reference to the POD.

The following is a list of major construction activities, in order of occurrence along the spread:

- ROW clearing and grading;
- Topsoil salvage;
- Trenching;
- Stringing;
- Welding, and radiographic examination;
- Joint coating and repair;
- Lowering in;
- Trench back-filling;

- Hydrostatic testing and final tie-ins;
- Cleanup and restoration; and
- Site rehabilitation.

Each of these operations is described in more detail later in this section. Figure 2-9 shows components of a typical spread. Figure 2-10 shows the typical ROW configuration for the $CO_2$ pipeline with the topsoil and trench spoil piles. Table 2-4 lists major pieces of equipment used for pipeline construction. Fuel consumption used for pipeline construction is estimated at approximately 6,000 gallons of diesel fuel per mile and 3,000 gallons of gasoline per mile.

Construction workers would live in permanent residences, local motels, rented houses or lodging, and personal trailers or pickup campers. Car pools, privately owned vehicles, and buses would be used to transport workers to the construction site.

Temporary headquarters for construction and a pipeline welding and storage yard would be located at or near Casper, Wyoming. Temporary headquarters would consist of an office trailer, one or more warehouse trailers (or suitable rented space, if available), and the storage yard for pipe, other major pipeline materials, and construction equipment.

The pipe and equipment would be shipped to an area northwest of Casper via trucks and/or railroad. Approximately 14,000 tons of 12-inch by 0.312-inch (average) and 415 tons of 8-inch by 0.250-inch (average) wall thickness pipe would be required for the project. An estimated 5,000 tons of other material (measurement facilities, valves, fittings, communications and control equipment, etc.) also would be needed. Distribution to construction sites would require an average of 15 to 20 truckloads per day during the period of peak activity. Pipe and equipment would be hauled from the welding and storage yard using various U.S. and state highways, county roads, private roads, and access roads to existing easements and ROW.

There are 35 existing access roads that intersect and parallel the proposed pipeline ROW, which can be used in their present condition for pipeline construction (Table 2-5). Of these, 12 are heavy duty road and 23 are light-duty roads (capable of use by ¾-ton trucks or less). Roads 1A, 1C, 2A, 3, and portions of 4 are considered 2-track trails. Additional maintenance activities would include application of magnesium chloride (surface stabilizer) on road 2 and replacement of damaged culverts on road 5A. The use of signs and markers on light-duty roads and maintenance activities would follow *BLM Manual 9113-Roads*.

Policies governing the use of access roads has been developed by PSC and stipulated to all contractors (see Appendix J in POD). Prior to construction, company and contractor employees would be counseled to use only designated access roads and the ROW for access. All off-road

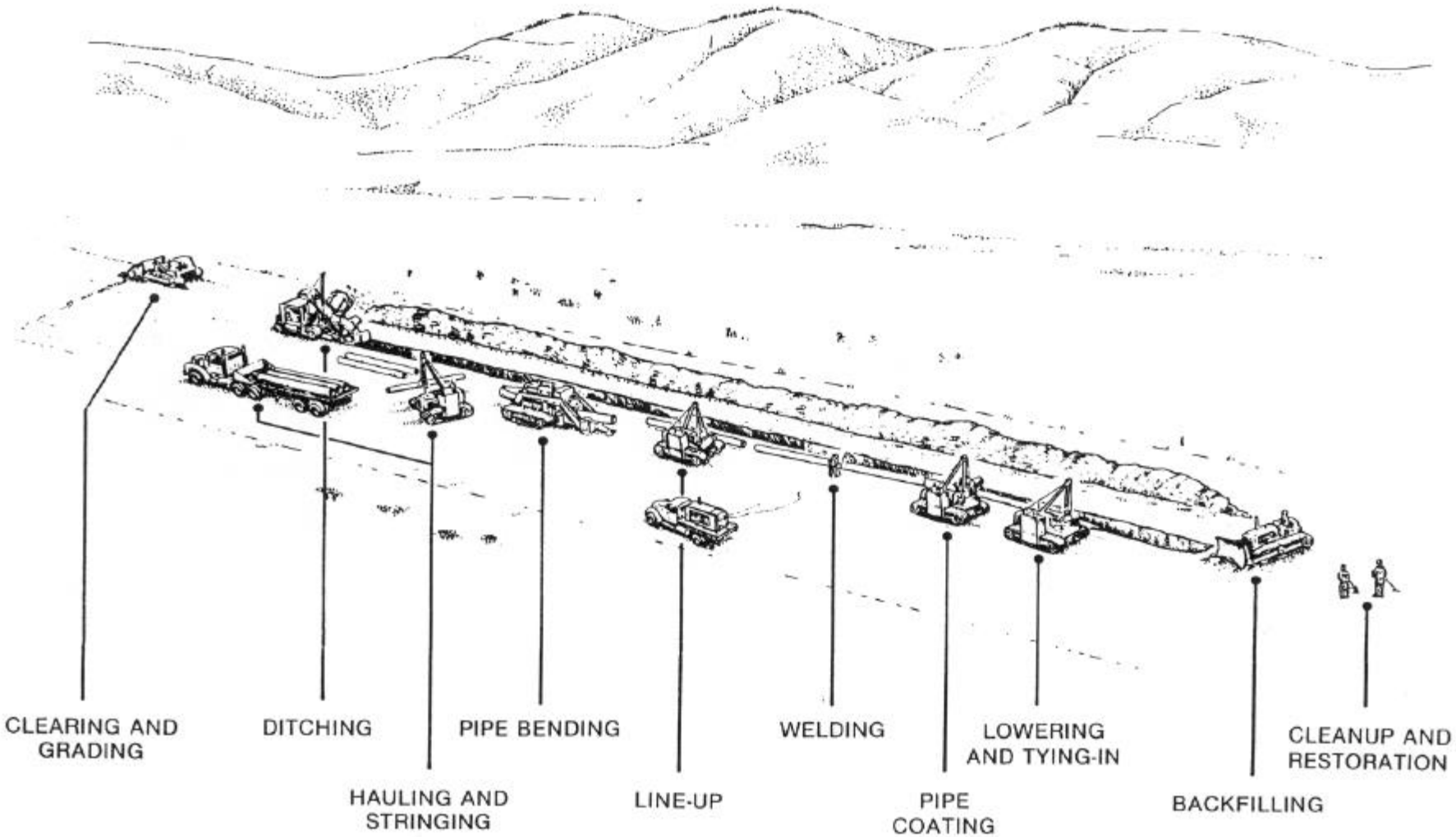


PETRO SOURCE $CO_2$ PIPELINE PROJECT

**Figure 2-9**
**Typical Rural Construction Spread**

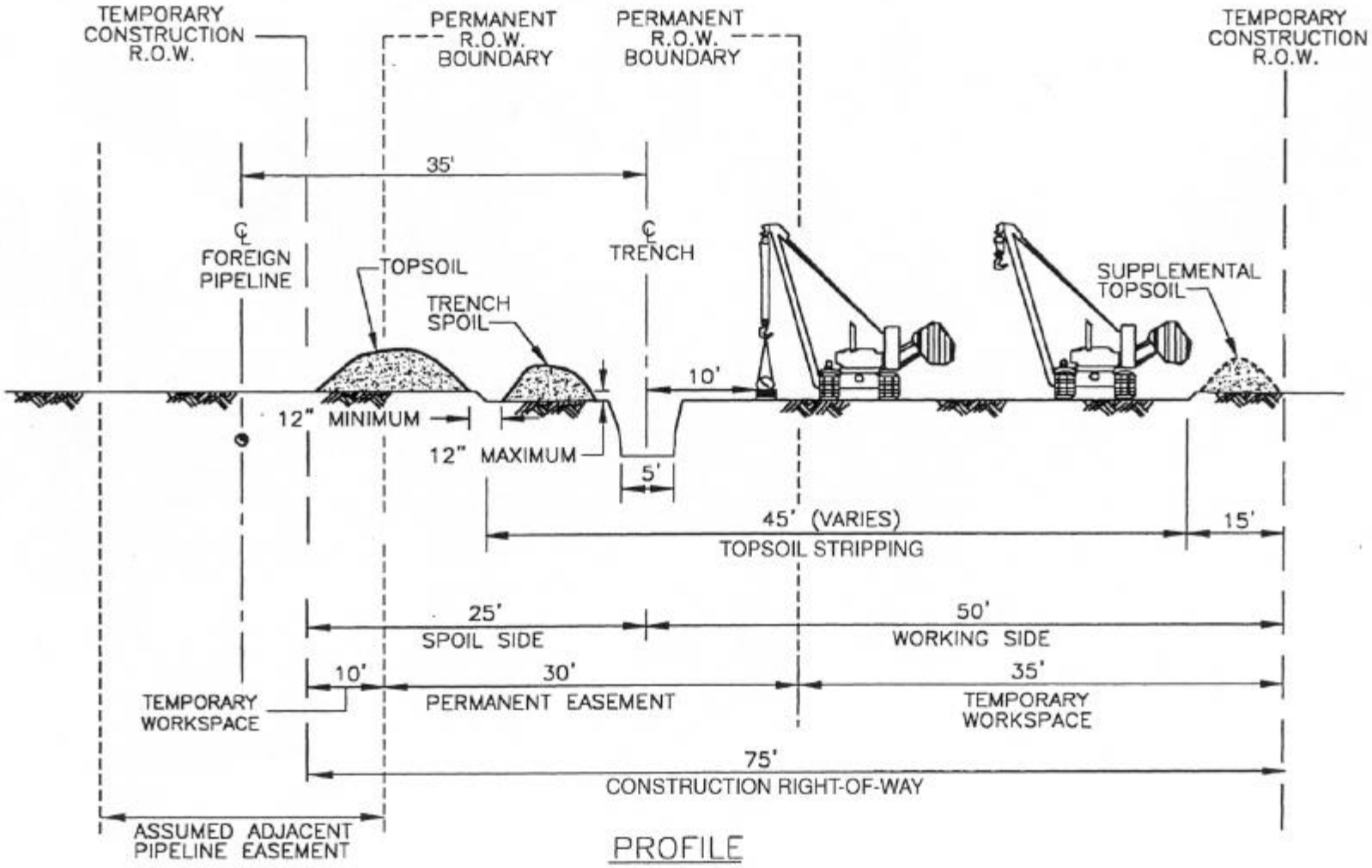


PETRO SOURCE $CO_2$ PIPELINE PROJECT

**Figure 2-10**

**Typical Right-of-Way Construction Configuration with Topsoil Salvage**

**Table 2-4**
**Major Pieces of Equipment Required for Construction of the Proposed PSC $CO_2$ Pipeline**

| Equipment | Number Required |
|---|---|
| D-8 Dozer with Ripper | 1 |
| D-7 Dozer with Winch and Angle Blade | 4 |
| D-7 Tow Tractor | 4 |
| 572 Sideboom | 7 |
| Backhow (3/4-yard) | 4 |
| Ditching Machine | 2 |
| Backfiller | 1 |
| Clamshell Dragline (3/4-yard) | 1 |
| Dragline (3/4-yard) | 1 |
| Wagon Drill | 2 |
| Motor Drill | 1 |
| Motor Grader | 2 |
| Motor Crane | 1 |
| Bending Machine | 1 |
| Boring Machine | 1 |
| Air Compressor | 2 |
| Pipe Coating Trucks | 1 |
| Pumps | 3 |
| Flatbed Truck | 33 |
| Pickup | 10 |
| Stringing Truck | 4 |
| Bus | 4 |
| Skid Truck | 1 |
| Dump Truck | 2 |
| Tractor with Lowboy | 2 |
| Mechanic's Truck | 2 |
| Grease Truck | 1 |
| Fuel Truck | 2 |
| Water Truck with Sprinkler | 1 |
| Office Trailer | 1 |
| Warehouse Trailer | 1 |
| Welding Machines (200 amp, tractor-mounted) | 2 |
| Welders' Trucks (1 Ton ) | 20 |
| Tractor (reclamation) | 2-4 |
| Disc ploughs (reclamation) | 2-4 |
| Chisel ploughs (reclamation) | 2-4 |
| Reseeding equipment (reclamation) | 2-4 |

## Table 2-5
## Access Road Summary

| Access Road Number | Location By Quadrangle Sheet | Description | Road Use | Ownership | Length of Road to be Used (miles) |
|---|---|---|---|---|---|
| 0 | Crooks Peak/Jeffrey City | Crooks Gap Road | Heavy | County | 8.71 |
| 1 | Crooks Peak/Jeffrey City | Big Eagle Mine Road | Heavy | Private/BLM | 3.92 |
| 1A | Crooks Peak | 2-Track Trail | Light | Private/BLM | 2.39 |
| 1B | Jeffrey City | Sheeps Creek Road | Light | BLM | 4.27 |
| 1C | Jeffrey City | 2-Track Trail | Light | BLM | 1.25 |
| 2 | Split Rock NW | BLM Road 2411/Green Mountain Road | Heavy | BLM | 5.53 |
| 2A | Split Rock NW | 2-Track Trail | Light | BLM | 1.61 |
| 3 | Split Rock | 2-Track Trail | Light | BLM | 2.55 |
| 4 | Split Rock/Bucklin Reservoirs/Lone Mountain/Miller Spring | Varies from Ditched/Crowned Ranch Road to 2-Track Trail | Light | Private/BLM | 18.87 |
| 5 | Saddle Rock | County Road 321/Dry Creek Road | Heavy | County | 1.02 |
| 5A | Saddle Rock/Horse Creek Springs | Unimproved Road | Light | BLM | 11.68 |
| 6 | Eightmile Draw | County Road 201/Poison Spider Road | Heavy | County | 0.83 |
| 7 | Square Top Butte/Powder River | County Road 210/Strohecker Road | Heavy | County | 2.70 |
| 7A | Square Top Buttle | Unimproved Road | Light | BLM | 2.54 |
| 8 | Natrona/Burlington Lake/Reynolds Reservoir | County Road 126/North Natrona Road | Heavy | County | 10.17 |
| 8A | Natrona | Unimproved Road | Light | BLM | 0.12 |
| 8B | Natrona | Unimproved Road | Light | County | 0.36 |
| 8C | Burlington Lake | Unimproved Road | Light | BLM | 0.22 |
| 8D | Reynolds Reservoir | Unimproved Road | Light | BLM | 0.23 |
| 9 | Merino/Camel Hump/Salt Canyon/Government Creek | County Road 110, 114 & 125/Dead Horse Road | Heavy | County | 22.66 |
| 9A | Camel Hump | Unimproved Road | Light | BLM | 0.28 |
| 9B | Camel Hump | Unimproved Road | Light | BLM | 0.93 |
| 10 | Government Creek | County Road 115/Smoky Gap Road | Heavy | County | 7.84 |
| 10A | Government Creek | County Road 114/Long Canyon Road | Heavy | County | 1.08 |
| 10B | Government Creek | Unimproved Road | Light | BLM | 1.22 |
| 11 | Dead Woman Crossing | Sussex Field Road | Light | Private/BLM | 2.45 |
| 12 | Government Creek | Unimproved Road | Light | Private | 1.53 |
| 13 | Midwest | Unimproved Road | Heavy | Private | 1.46 |
| 13A | Midwest | Unimproved Road | Light | Private | 1.19 |
| 14 | Midwest | Unimproved Road | Heavy | Private | 0.61 |
| 15 | Dead Woman Crossing/Sussex | Unimproved Road | Light | Private | 4.55 |
| 16 | Sussex/House Creek | Unimproved Road | Light | Private | 5.02 |
| 17 | House Creek | Unimproved Road | Light | Private | 5.31 |
| 18 | Fort Reno/North Butte | Unimproved Road | Light | Private | 7.95 |
| 19 | Fats Draw | Unimproved Road | Light | Private | 2.33 |

Note: Light duty road reflects pickup truck traffic (3/4 ton or less).
Heavy duty road reflects all traffic associated with construction.

driving would be prohibited, other than on the ROW. Signs would be established on approved access and used to identify roads where access is prohibited.

TUAs would be required for the Sweetwater River, highway and railroad crossings, steep slopes, and sharp ridges. The location and estimated disturbance area for the TUA are provided in Table 2-6. In calculating the disturbance, the ROW width (75 feet) was subtracted from the total TUA width to avoid duplication, since the pipeline disturbance area already accounted for the 75-foot ROW width. Engineering studies would be completed and reviewed with the BLM prior to the initiation of construction, as needed, prior to construction (see Section III.B in POD).

During construction of the pipeline, PSC would comply with existing federal, state, county, and private requirements developed to protect road networks. Load limit restrictions would be observed at all times to prevent damage to the road surface. Special arrangements would be made with the Wyoming Highway Department and county governments to transport oversize and heavy loads.

#### 2.2.2.1 ROW Clearing and Grading

Normal pipeline construction begins by clearing and grading a pipeline ROW to prepare a smooth and unobstructed work pad for succeeding construction operations. A nominal working width of 75 feet would be required for construction (Figure 2-10). The degree of grading necessary is a function of the roughness of the terrain. For most of the proposed pipeline, clearing and grading is a simple operation with no cuts or fill required. The timing between clearing and trenching would require the ROW to be cleared approximately 2 weeks ahead of trenching. This would result in a cleared workable construction easement up to 25 miles ahead of the construction crew under the best conditions. Topsoil stripping would occur in all areas except historic trails, as described in Section III.G, of the POD. Where possible, brush beating would be considered as an alternative to grading in certain areas. Specific areas where brush beating could be used are the 5 historic trail crossings (see Section 2.3.5).

In areas where the proposed pipeline would parallel an existing pipeline, the new line would be kept at a distance of 25 to 35 feet away. A 10-foot-wide safety zone would be established next to the existing pipeline to protect it from construction activities.

Grading would be conducted so as to minimize interference with existing natural drainage. For vehicle safety on the ROW, temporary bridges or culverts would be constructed, when warranted, across creeks and gullies on the working side of the ROW. Any such crossings would be done in a manner that would not interfere with normal drainage patterns. In mountainous or hilly terrain where the slope runs across the ROW, a level work pad must be cut out of the hillside; this

## Table 2-6
## Summary of Construction Temporary Use Areas PSC $CO_2$ Pipeline Project

| Description | Temporary Construction Area | | | | |
|---|---|---|---|---|---|
| | MP | Width | Length | Area ($Ft^2$) | Acres |
| Bairoil Terminal | 112.4 | 400 | 400 | 130,000 | 2.98 |
| Green Mountain - Side Slope | 114.4 | 100 | 1,700 | 42,500 | 0.98 |
| | 114.8 | 100 | 300 | 7,500 | 0.17 |
| | 115.0 | 100 | 900 | 22,500 | 0.52 |
| | 115.2 | 100 | 1,300 | 32,500 | 0.75 |
| | 115.5 | 100 | 1,000 | 25,000 | 0.57 |
| | 116.1 | 100 | 2,400 | 60,000 | 1.38 |
| | 116.6 | 100 | 900 | 22,500 | 0.52 |
| | 117.3 | 100 | 1,700 | 42,500 | 0.98 |
| | 117.8 | 100 | 1,500 | 37,500 | 0.86 |
| | 118.3 | 100 | 800 | 20,000 | 0.46 |
| Test Station | 119.8 | 100 | 200 | 5,000 | 0.11 |
| Green Mountain - Side Slope | 121.6 | 100 | 500 | 12,500 | 0.29 |
| | 121.8 | 100 | 1,200 | 30,000 | 0.69 |
| | 122.6 | 100 | 500 | 12,500 | 0.29 |
| | 125.0 | 100 | 700 | 17,500 | 0.40 |
| US Highway - East Side | 130.3 | 100 | 200 | 5,000 | 0.11 |
| US Highway - West Side | 130.3 | 100 | 200 | 5,000 | 0.11 |
| Sweetwater River Block Valve - West Side | 133.8 | 100 | 100 | 2,500 | 0.06 |
| Sweetwater River - West Side | 134.3 | 250 | 400 | 70,000 | 1.61 |
| Sweetwater River - East Side | 134.3 | 250 | 400 | 70,000 | 1.61 |
| Test Station | 137.3 | 90 | 200 | 3,000 | 0.07 |
| Dry Creek Road Block Valve | 150.8 | 100 | 200 | 5,000 | 0.11 |
| Rattlesnake Hills | 158.8 | 100 | 500 | 12,500 | 0.29 |
| Side Valve | 163.0 | 100 | 100 | 2,500 | 0.06 |
| Test Station | 163.8 | 100 | 200 | 5,000 | 0.11 |
| Poison Spider Road - Block & Side Valve | 169.0 | 100 | 100 | 2,500 | 0.06 |
| US Highway 20/26 Trap & Side Valve | 183.0 | 100 | 200 | 5,000 | 0.11 |
| Test Station | 186.0 | 100 | 200 | 5,000 | 0.11 |
| US Highway 20/26 West Side | 187.3 | 100 | 200 | 5,000 | 0.11 |
| US Highway 20/26 East Side | 187.3 | 100 | 200 | 5,000 | 0.11 |
| Burlington Northern Railroad - South Side | 188.4 | 100 | 200 | 5,000 | 0.11 |
| Burlington Northern Railroad - North Side | 188.4 | 100 | 200 | 5,000 | 0.11 |
| Thirtythree Mile Road Block Valve | 206.5 | 100 | 200 | 5,000 | 0.11 |
| Smokey Gap Road Block & Side Valve | 222.9 | 100 | 200 | 5,000 | 0.11 |
| Interstate 25 West Side | 228.1 | 100 | 200 | 5,000 | 0.11 |
| Interstate 25 East Side | 228.1 | 100 | 200 | 20,000 | 0.46 |
| Sussex Road Block & Side Valve | 240.1 | 100 | 100 | 2,500 | 0.06 |
| State Highway 192 West Side | 246.2 | 100 | 200 | 5,000 | 0.11 |
| State Highway 192 East Side | 246.2 | 100 | 200 | 5,000 | 0.11 |
| Oil Field Road Block & Side Valve | 259.6 | 100 | 100 | 2,500 | 0.06 |
| Hartzog Draw Meter Terminal | 267.1 | 400 | 400 | 130,000 | 2.98 |
| ***TOTAL*** | | | | 913,000 | **20.96** |

Note: Area of TUA represents amount that is outside the ROW width. ROW area is accounted for in the pipeline disturbance area.

technique is referred to as a sidehill cut. Grading for sidehill cuts begins at the uphill end of the cuts and continues downward until the required working width is obtained. Spoil from the cut (uphill) is graded to fill the opposite (downhill) side of the bench where it forms part of the work pad, thereby minimizing the width of (uphill) is graded to fill the opposite (downhill) side of the bench where it forms part of the work pad, thereby minimizing the width of disturbed area. The slope of the cut (as well as the fill on the opposite side) depends on the angle of repose of the material being graded. The looser the material, the smaller the angle of repose and the larger the cut required for a given work pad width. Following construction, the fill material would be placed in the cut and the terrain contoured to its original condition for restoration.

Functional use of all livestock facilities and other public improvements would be maintained at all times. Fences would be adequately braced along both sides of the ROW before wires are cut and temporary gates installed. After construction, openings would be closed with fencing of the same specifications compared to the original. In some locations, permanent gates may be installed, with landowner permission, to provide access to the pipeline ROW. If a natural barrier used for livestock control were damaged during construction, the area would be adequately fenced to prevent the escape of livestock. No gates on established roads over public lands would be locked or blocked. Any cattle guards or gates damaged during construction would be repaired or replaced.

#### 2.2.2.2 Trenching

Trenching would be used for all sections of the ROW except larger road and highway crossings, railroad crossings, and at the Sweetwater River. Boring techniques would be used at these areas, as described in Section 2.2.2.5. Once the working area is prepared, the trenching operation would begin. Normal trenching uses a ditching machine or backhoe in a double ditching operation with the first cut into the trench to remove topsoil and the later cuts to remove subsoil. The approximate width of the trench would be 2 feet. Trenching typically proceeds ahead of the construction activities. To reduce the likelihood of accidents, trenching operations would be timed so that the trench is not open for more than 14 days (in most cases). Where an open trench would interfere with livestock trails, driveways, or rural roads, temporary crossings such as plank bridges would be provided to allow safe and unobstructed passage across the ROW. Alternately, a portion of the trench could be left unexcavated to allow livestock or vehicles to pass. In areas of active livestock grazing or wildlife migratory pathways, unexcavated portions of the trench would be left at approximately 1-mile intervals or as requested by the livestock operator to provide passage.

During trenching, the contractor would excavate the ditch along the staked ditch line. The finished ditch would be free of rocks, hard clods, roots, or other debris, which could injure the coating when the pipe is lowered into the ditch. The bottom of the ditch would be graded and dressed so

that the pipe would have a continuous and uniform bearing. The depth of the ditch would vary with the conditions encountered. The cover from the top of pipe to the ground level would be a minimum of 3 feet. In areas of consolidated rock, burial depth to the top of the pipe would be 1.5 feet (minimum) in accordance with DOT Part 195.

#### 2.2.2.3 Trench Backfilling

Topsoil would be preserved subject to agreements with landowners and the federal land managing agency. Detailed information on topsoil stripping is provided in Section III.G of the POD. Typical topsoil salvage procedures are shown in Figure 2-10; topsoil salvage in special areas such as historic trails is provided in Drawing 203 (Appendix A, POD). Complete topsoil stripping across the entire width of the ROW is shown in Drawing 208 (Appendix A, POD). In areas of single line ROW configuration, the topsoil would be stockpiled at the edge of the working side of the ROW. The ditching machine would then cast the ditch spoil to the spoil side of the ROW. Topsoil and ditch soil would be separated in areas of parallel line ROW configuration, except the topsoil above the trench would be placed at the outer edge of the working area on the opposite side of the ditch from the line being paralleled. After construction is completed, the ditch would be backfilled, with the topsoil going in last, returning it to its original position. Any special reclamation techniques required for these areas also would be described. Topsoil salvage techniques other than double ditching may be used if approved in the POD.

PSC and its contractors would do everything reasonable within their power to prevent and suppress any wild fires (see Appendix H in the POD).

#### 2.2.2.4 Blasting

Blasting would be required in areas that cannot be excavated or ripped by conventional means. If blasting is necessary, PSC would obtain the required permits and notify regulatory authorities as well as occupants of nearby buildings within 0.25 mile of the blast site. Ranchers or other property owners would be notified in sufficient time to protect livestock and property. In preparation for blasting, unconsolidated material would be removed from the ditch-line and a series of holes drilled by air-powered drills. The drills are generally suspended from a sideboom tractor, which also tows the compressor supplying the air. Self-propelled drills may be used if extensive blasting is required.

PSC would employ qualified personnel that are experienced in the handling of explosives. In areas of human use, shots would be blanketed with blasting mats to contain the blast. Before detonation, construction workers and local residents would be cleared from the blasting area. Scattered rock would be handled in accordance with the POD and either removed, buried, or

spread across the ROW to conform with natural conditions. PSC would use extra precautions in blasting near telephone or electrical conduits, water lines, wells, pipelines, or other underground structures.

#### 2.2.2.5 Highway, Railroad, WSAs, and Trail Crossings

At major paved highway and railroad crossings, the pipeline would be dry bored or directionally drilled to conform to requirements of the Wyoming Highway Department (Table 2-7). Current plans are to bore all established paved roads. Boring activities would not be conducted within the ROW limits but outside the paved highway or railroad width. PSC would keep all road surfaces free of dirt, rock, or other debris that could be a hazard to the public.

**Table 2-7**
**Highway and Railroad Crossings for the Proposed PSC $CO_2$ Pipeline**

| Highway or Railroad | MP | Type of Surface | Road/Railroad ROW Width | Crossing Method |
|---|---|---|---|---|
| BLM 2411 (Green Mountain Road) | 120.95 | Dirt | 70 | Cut |
| US Highway 287 | 130.20 | Asphalt | 150 | Bore |
| County Road 321 (Dry Creek Road) | 150.70 | Dirt | 100 | Cut/Bore |
| County Road 201 (Poison Spider Road) | 169.06 | Dirt | 100 | Cut/Bore |
| County Road 210 (Powder River Road) Oil Camp Road | 181.02 | Dirt | 150 | Cut/Bore |
| US Highway 20/26 | 187.50 | Asphalt | 100 | Bore |
| Burlington Northern Railroad | 188.58 | Tracks | 100 | Bore |
| County Road 126 (N. Natrona Road) | 190.80 | Dirt | 100 | Cut |
| County Road 126 (N. Natrona Road) | 191.85 | Dirt | 100 | Cut |
| County Road 126 (N. Natrona Road) | 193.70 | Dirt | 100 | Cut |
| County Road 110 (33 Mile Road) | 206.40 | Asphalt | 100 | Bore |
| County Road 115 (Smokey Gap Road) | 222.93 | Dirt | 100 | Cut |
| I-25 (Southbound) and Service Road | 228.07 | Asphalt | 210 | Bore |
| I-25 (Northbound) and Northern Utilities | 228.11 | Asphalt | 390 | Bore |
| Oil Field Road | 240.20 | Dirt | 70 | Cut |
| Sussex Field Road | 240.10 | Dirt | 70 | Cut |
| State Hwy 192 | 246.35 | Asphalt | 70 | Bore |

Notes: All unidentified dirt roads would be open cut.
All small dirt roads and trails to be crossed by standard lay methods using standard wall pipe with 4-foot clearance above top of pipe unless otherwise specified in the contract documents or on the approved construction drawings.

Construction crews would locate existing pipelines in the field from maps or with the use of a metal detector to avoid damage during trenching. Special techniques, including some hand digging, may be required to avoid damage.

Historic trails would be crossed at 5 locations: Oregon/Mormon/Pony Express Trails (MPs 132.0, 132.2, and 132.3); Bridger Trail (MP 175.4); and Bozeman Trail (MP 253.0). All five trail crossings would be trenched and an archaeological monitor would be present during construction activities. Construction activities at each trail crossing would be conducted in accordance with the procedures detailed in the Programmatic Agreement (Appendix A).

If sufficient width is available between the Split Rock WSA and Millers Spring WSA, PSC would prefer to trench this area. Boring would be used if sufficient width is not available in this area.

#### 2.2.2.6 Stream and Wetland Crossings

The proposed pipeline would cross the Sweetwater River at MP 134.3 and 10 other perennial streams (see Chapter 3.0, Table 3-4) located along the route. Other smaller or intermittent drainages also would be crossed. The ROW width would be reduced at stream crossings. The pipeline would be buried in a trench at the listed streams and would be horizontally directionally drilled at the Sweetwater River crossing. PSC has aligned the crossings to minimize impacts on riparian and wetland vegetation. A plan and profile of a typical crossing is shown in Appendix A of the POD. Vegetation would be cleared on each stream bank only as needed to provide enough work space and equipment storage. Brush beating would be considered at all major stream crossings. The directional drill construction method for the Sweetwater River crossing is shown in Appendix A of the POD.

Wetland crossings would be completed as described in Drawing 400 in Appendix A of the POD. Clearing for the minimum construction ROW width would be 50 feet or less, where practical. Wherever possible, TUAs would be located outside of wetland areas. In saturated wetlands, techniques would include the use of wide-track or balloon tires, or standard equipment operated on timber riprap or mats. Sediment barriers would be installed immediately upslope of the wetland boundary to minimize effects on any adjacent wetlands. Woody vegetation in wetlands would be cleared using the least disruptive method. Grass or herbaceous vegetation would not be removed except immediately over the ditch line or in rough/broken terrain. Topsoil would not be stripped from the ROW except over the trench line and where required to prepare a level work surface for pipe-laying equipment. Spoil material and topsoil from the trench would be segregated within the ROW. Topsoil salvage depths would be determined from the inventory of soil resources that would be completed by PSC prior to construction. If standing water and unstable soils interfere with construction, the trench may be dewatered by pumping. Trench water would be disposed of

in accordance with the Wyoming Department of Environmental Quality (WDEQ) regulations. In saturated wetlands, soils would be protected from traffic impacts by the use of timber mats or other supportive material. Temporary fill would not be brought into the wetland to stabilize the working area. After the pipe is installed, the trench line would be backfilled and the topsoil replaced. No crown would be left over the trench. The salvaged topsoil, which would contain seeds and propagules from wetland species, would be reapplied to the areas from which it was stripped to maximize reclamation success.

In hilly areas, depending on the pipeline gradient, sacks filled with sand or smooth soil may then be placed in the trench as barriers, perpendicular to the pipe at regularly spaced intervals to prevent water from running down the trench during rain storms and from washing out the backfill. When these preparations are completed, the areas between and over the sack breakers may be backfilled with spoil and topsoil excavated from the trench.

#### 2.2.2.7 Water Withdrawals for Hydrostatic Testing, Directional Drilling, and Dust Abatement

Once the pipe is in place, the system would be tested with pressurized water to locate any leaks or weak spots. The entire pipeline would be hydrostatically tested to at least 125 percent of maximum operating pressure. The test water would be obtained from the Sweetwater River through a Water Use Agreement with the State Engineer and negotiations with water rights owners. Initial discussions with the State Engineer's office indicated that water should be available through negotiations with a senior water rights holder (Barnes 2001). Test water would be reused in testing each section of the pipeline. Approximately 3.3 acre-feet of water would be required for testing. The test water would be shunted from section to section of the pipeline for testing and eventually disposed of in accordance with federal, state and local agency requirements. Hydrostatic test water would be discharged through straw bale structures and then released to the Sweetwater River (Drawing 512 in Appendix A of POD). Consumptive water use would be required for directional drilling and dust abatement. Approximately 3.1 acre-feet would be withdrawn from the Sweetwater River for mixing with bentonite during directional drilling at the river crossing and in the Split Rock area. Approximately 1.7 acre-feet of water would be obtained from irrigation companies or municipal sources for dust abatement.

#### 2.2.2.8 Cleanup and Restoration

The last operation of pipeline construction is cleanup and restoration. Where the side hill slopes are gentle, the material graded from the working width would be replaced, contoured, and restored as nearly as practical to preconstruction conditions. Water bars would be constructed in steeper areas to prevent erosion. The surface of the filled-trench would be generally flat and

compacted by the dozer tract. This method of restoration does not create a road, but does provide emergency access to the sidehill slopes for pipeline maintenance and repair. In general, a slight berm (approximately 4 inches high) may be needed in the trenched area.

PSC would implement an Erosion Control, Revegetation, and Restoration Plan as a part of the POD (Section VII) to be approved by the BLM. Rehabilitation procedures have been developed on a site-specific basis in that plan. In general, the procedures discussed below would be followed.

After backfilling and cleanup are complete, the soil would be chiseled with suitable equipment to ameliorate compaction and improve soil permeability. A firm and friable seed bed suitable for the establishment of vegetation would be provided. The seed bed also would be disked prior to planting. Mulch or other stabilizing materials would be placed on the disturbed area for erosion control, as needed (Appendices C and G in POD).

Revegetation of lands disturbed by construction would be in accordance with applicable regulations and permit requirements. Species and seeding rates effective in controlling erosion would be used to revegetate the disturbed areas. Species have been selected after consideration of climatic adaptation, species adaptation to soil texture, possible adverse conditions such as drought or saline soils, palatability to wildlife, and shrub cover for wildlife. Generally, commercially available native species, as approved by the landowner or surface management agency, would be used. A seed mixture has been formulated for general use along the ROW. However, specific seed mixes would be used for areas with sandy, loamy, and saline/sodic soils, as discussed in Appendix G of the POD. Seed would be planted by drilling or broadcasting. The use of a rangeland drill would be the preferred seeding method. Areas not accessible to a rangeland drill would be broadcast-seeded. Broadcast-seeding rates would be double compared to drill application. Seeding would be done during the appropriate period when the seeds would receive the benefit of both winter or spring moisture.

Commercial fertilizers would be applied, where appropriate, to soil areas with low inherent fertility to establish grass seedings. Application rates would depend on annual precipitation and other conditions. The use of all biochemicals, including fertilizers, would comply with all applicable laws regarding their use. The use of herbicides and pesticides is not planned at this time.

Suitable mulches and other soil stabilizing practices would be used where necessary to protect bare soil from wind and water erosion and to improve water infiltration. Cultivation and land preparation operations on steeply sloping areas would be done along the contour to minimize erosion. Areas with steep slopes are identified in Section, 2.3.9.

Disturbed and reseeded areas would be inspected periodically to monitor the success of erosion control measures and revegetation programs. The monitoring program would help identify problem areas and corrective measures to ensure vegetation cover and erosion control. In addition, a weed control program would be developed for disturbed areas (see POD, Appendix F). The BLM and local county authorities would be consulted to obtain the most appropriate weed control methods.

#### 2.2.2.9 Special Construction Areas

The pipeline route was studied for sensitive areas which would require more extensive restoration and construction efforts. Additionally, the restoration efforts of the adjacent pipelines (i.e. Frontier Pipeline) were studied for applications on the proposed PSC Project. These special construction areas are discussed below.

**Green Mountain (MP 114.2 to 118.3)**

This area has side slopes (20 percent average) and, in addition, the Frontier Pipeline is immediately adjacent to the proposed line. The Frontier Pipeline would be staked the entire length and their representative would be notified prior to the initiation of construction. Construction activity would be limited over the Frontier Pipeline. Topsoil would be stripped from the surface and stockpiled separate from the spoil materials. The spoil materials would be placed on the working side of the ROW, as illustrated on the typical sidehill cut drawing (#206) in Appendix A of the POD. Covering procedures for benching operations would require placing spoil materials in the ditch first and then topsoil would be used to cover the disturbed area.

After installation of the pipe and backfilling, the graded areas would be returned as near as practical to their original contours. Prior to seeding, the contractor would distribute excess boulders (that resulted from this project) along the ROW so that the terrain would look as natural as practical. Where possible, the ROW would be disced to trap moisture and reduce erosion. When necessary, water bars would be installed as described in Section VII of the POD. Water bars would tie-in to Frontier's water bars, if appropriate. In areas where Frontier's water bars were not installed properly, PSC would rebuild them to properly protect the ROW. Those areas having steep slopes would be straw mulched at a 2-ton/acre rate.

These slopes would have the straw mulch disked in with the soil, where possible. Otherwise the mulch would be distributed on these slopes without discing to aid in retaining moisture. The cleared area would be seeded in accordance with the special seed mixture. The seed mixture would be applied by a drill equipped with a depth regulator. If this is impractical, the mixture would be broadcast. The seed mix is shown in Appendix G, Table G-3 of the POD.

**Surface Slumping (MP 114.6)**

This area would be studied in the detailed engineering phase of the project. Assuming the problem is shallow surface slumping, no action is planned at this site, since it is outside of PSC's construction ROW and would pose no threat to PSC's proposed project. If the problem is more severe than shallow surface slumping, a design would be developed, which would mitigate additional slumping that might be adverse to PSC's proposed project.

**Bank Erosion (MP 117.8)**

The banks of this drainage have sloughed off adjacent to the Frontier Pipeline ROW. When the PSC pipeline is constructed, the banks would be tapered to a more gradual slope than currently exist. Water bars would be installed in accordance with Section VII of the POD to eliminate the small abrupt changes in elevation that currently exist. The new gradual slope would taper to match the undisturbed terrain.

**Highly Eroded Areas (MP 202.3 to Hartzog Draw)**

Highly eroded terrain with steep banks are scattered throughout this part of the pipeline route. The soil has very little cohesion making restoration to original contours difficult. The pipeline ROW would be graded to blend into the adjacent terrain in this area.

**Active Faults**

Active faults along the pipeline ROW would be studied during the detailed engineering phase of the project. A design would be developed at that time which would mitigate the effects from fault movement.

**Split Rock and Miller Springs WSA (MP 137.3 to MP138.0)**

The limits of the construction ROW would be staked prior to construction. PSC would notify the BLM when staking is completed and then schedule a date for a field visit to review the corridor restriction. Additionally, BLM would be notified as to when the contractor would be constructing in this area. During construction the contractor would work within the restricted corridor, as defined by the disturbed areas along the most westerly side of the existing road and the Colorado Interstate Gas (CIG) ROW, and the most easterly side of the Frontier and CIG ROWs. A detailed drawing for this area is provided in Appendix A of the POD.

#### 2.2.2.10 Hazardous Materials/Wastes

Hazardous materials that would be used during construction include gasoline, lubricants, motor oils, diesel fuel, hydraulic fluids, and pipe primer. Except for the primer, these materials would be used in the construction vehicles and equipment. The primer would be applied at the pipe yard located northwest of Casper, Wyoming. Primer also may be used on welded joints during construction.

### 2.2.3 Operation

A Communications and Control Center at one of PSC's facilities would monitor and control the pipeline operation. Computers would continuously monitor pipeline pressure and flow conditions at delivery points. The computers would be programmed to sound an alarm anytime there is a deviation in pressure or flow indicating abnormal condition in the pipeline system. No hazardous materials or wastes would be used or produced as part of project operation.

Specialists and technicians would be on-call to service the pipeline. The ROW would be periodically inspected by an aerial patrol. Surface traffic would be limited to workers performing pipeline and valve maintenance, periodic monitoring and inspection, and emergency repairs to the pipeline or associated equipment.

The permanent work force for pipeline operation would be an incremental increase of one full time position, probably stationed at Casper. Pipeline maintenance, as required, would be done with local contractors specializing in this type of work. The annual cost of pipeline operation and maintenance is expected to be approximately $100,000 to over $1.5 million per year, depending upon delivery volumes.

#### 2.2.3.1 Rupture Scenario

There have been no reported leaks or accidents on ExxonMobil's $CO_2$ pipeline segment to Bairoil, which began operation in 1986. The frequency or size of leaks or ruptures for other $CO_2$ pipelines is largely unknown because there are few such pipelines for comparative analysis. The incidence of pipeline leaks or ruptures is most often caused by outside disturbances such as heavy equipment operating in the vicinity of the pipeline. Because of advances in pipeline technology and the rural nature of this line, the chances for rupture are assessed to be lower than average for the gas pipeline industry.

Since $CO_2$ is nonflammable, no explosion or fire would occur in the event of a rupture, however, flying soil and debris could be dangerous at the point of rupture. $CO_2$ concentration near the

rupture would be high. The gas would be slightly heavier than air but would dissipate rapidly with wind currents. Public safety measures for possible leaks or ruptures are described in Section V of the POD.

If a $CO_2$ rupture occurred, hazards could exist in a localized area due to debris and broken pipe. $CO_2$ also could freeze or asphyxiate persons adjacent to the rupture. $CO_2$ is a respiratory stimulant and an asphyxiate (BLM 1989). Inhalation of air containing 50,000 ppm would stimulate respiration and could result in other acute effects such as headache, rapid beating of the heart, sweating, shortness of breath, and dizziness. At concentrations of 70,000 to 100,000 ppm, unconsciousness would occur within several minutes. In contrast, the normal $CO_2$ concentration in the atmosphere is about 320 ppm. The short-term exposure limit, which represents the maximum concentration to which workers can be exposed continuously for up to 15 minutes without suffering adverse health effects is 30,000 ppm (American Conference of Governmental Industrial Hygenists 1998).

A worst-case scenario for $CO_2$ release in the longest section of the PSC pipeline would be to assume that the pipeline was ruptured to the point where the full flow of that section could escape through the rupture. The longest segment between block valves is from MP 185.0 to MP 206.5. A rupture in this segment would result in the release of 40 million standard cubic feet of $CO_2$.

Pinhole leaks during operation of the pipeline could occur but would not be expected to be serious. The leak would probably cause a high-pitched sound made by the escaping gas and form a white frost spot on the ground. Periodic inspection would identify such leaks, and they would be repaired.

### 2.2.4 Abandonment

BLM standard stipulations would be followed as part of the abandonment process (see Section VIII in the POD). At project termination, all surface facilities would be removed, and the disturbed acreage would be rehabilitated. The product would be purged and aboveground structures could be removed. The pipe would be filled with inert nitrogen and the ends capped as part of pipeline removal. The areas would be reshaped to blend into adjoining areas to the extent permitted by existing conditions. All disturbed areas would be seeded with the appropriate seed mixture to ensure that an acceptable stand of vegetation is established.

## 2.3 No Action Alternative

The No Action Alternative would be the denial of the requested ROW. This means that the proposed project would not be authorized across federal lands.

## 2.4 Alternatives Considered but Eliminated From Detailed Analysis

### 2.4.1 Truck Transportation of $CO_2$

Truck transportation of $CO_2$ from Bairoil Terminal or the Shute Creek Gas Plant or other sources would require approximately 105 up to 450 trucks each day. Many of the existing roads could not accommodate the increased traffic volume and would need to be expanded. Transportation of $CO_2$ by truck would not provide a reasonable alternative to the Proposed Action. The large numbers of trucks, long distances involved, and the much greater costs inherent in this alternative would not offer reduced environmental or socioeconomic impacts nor offer other advantages.

### 2.4.2 Casper Alternative

The Casper alternative was originally examined in the Bairoil/Dakota $CO_2$ Projects EIS. This alternative would have followed the Frontier Pipeline corridor to Casper and then turned to the north instead of passing Casper at a distance to the west. This alternative would have made greater use of existing corridors as established in the BLM Platte River Resource Management Plan.

Constructing the 12-inch pipeline through Casper would cause several significant problems. The narrow existing corridor would require crossing other pipelines, power lines, telephone lines, roads, and public utility lines. Also, because of the size of the construction area required for the $CO_2$ line, the potential for crossing individual homesites would be high. Disruption of utility services, roads, and homesites would cause significant and unnecessary impacts.

### 2.4.3 Crooks Gap Alternative

An alternative pipeline alignment in the Green Mountain area proposed in the original Bairoil/Dakota $CO_2$ Projects EIS was presented as the Crooks Gap Option, an 18-mile-long segment through Crooks Gap that would replace a 13-mile-long segment of the proposed route that parallels the Frontier Pipeline through the Green Mountain area. This alternative was reexamined during a field reconnaissance on July 6, 2000, and eliminated for the following reasons:

- Construct ROW within an existing pipeline corridor and avoid 14 miles of new disturbance; and

- Fix problems with reclamation along the Frontier Pipeline ROW.

### 2.4.4 Lateral Alternatives

Two alternative routes were initially considered for the lateral. One route followed State Highway 259, while the other route was adjacent to the Burlington Northern Railroad. The railroad route was eliminated because it represented an historical site. The highway route was eliminated for two reasons: 1) safety concerns involving construction equipment near the highway and 2) additional length compared to the selected route.

## 2.5 Environmental Protection Measures

PSC has committed to specific environmental protection measures, as part of their proposed $CO_2$ Pipeline Project, to minimize potential impacts to natural resources during construction and operation. These protection measures are listed in Section III.P of the POD and described below by resource. For some of the resources (i.e., wetlands, cultural resources, sage grouse leks), field verifications would be conducted after the ROW centerline is staked to determine the appropriate resource protection measures, which could include ROW narrowing or realignment of the ROW to avoid the potentially affected resource.

### 2.5.1 Air Quality

1. Water or chemical soil binder (see Appendix G, Section 2.5.4 in the POD) would be used to control dust along the ROW and access roads during construction in accordance with federal, state, and local requirements. Any dust control water would be used only at the landowner's request. Any dust control water would be obtained by permits or purchased through contracts with owners with valid, existing water rights.

### 2.5.2 Geology and Soils

1. Soil erosion would be minimized by implementing procedures described in the Storm Water Pollution Prevention (SWPP) Plan (see Appendix C in the POD). These measures would include silt fences, erosion control fabric, fiber, or trench plugs. Protection measures for drainages are listed in Section 2.5.3.

2. In areas where interim soil stabilization would be needed (e.g., steep slopes and wind erosion areas), a chemical soil binder and/or mulches would be applied to minimize soil loss.

3. If construction occurred during a storm event, vehicle traffic and equipment would be restricted to prevent rutting in excess of approximately 4 inches deep, except in areas where topsoil has been stripped and saved for rehabilitation.

### 2.5.3 Water Resources and Wetlands

1. A biologist familiar with wetland and riparian identification techniques would accompany or immediately follow the survey crew during initial staking of the ROW. The biologist would identify wetland, riparian, or other sensitive surface waters that may have been missed during the initial surveys and make recommendations on modifying the proposed route to avoid sensitive areas, particularly around water features that were recommended for avoidance during the initial surveys. Wherever reasonably possible, riparian and wetland areas, including playas and forested wetlands, would be avoided by pipeline construction activities. The field biologist would be familiar with other resource constraints identified along the route, such as the locations of sage grouse leks and sensitive plant populations, and would take this information into consideration when suggesting reroutes around sensitive water resources. In addition, the appropriate cultural resources and sensitive species specialists would also be consulted on areas recommended for sensitive water feature reroutes.

2. Where crossings of riparian or wetland areas cannot be reasonably avoided, the construction ROW width would be reduced to 50 feet or less and the line would be routed in a manner that minimizes disturbance. Crossing techniques for wet and dry crossings of wetland and riparian areas may include fluming and trench dewatering techniques, and use of timber matting, or use of prefabricated equipment mats. Reclamation in these areas would be conducted as specified in the Reclamation Plan (Appendix G of the POD).

3. Topsoil in wetland and riparian areas would be stripped and stockpiled for use in reclamation as specified in the Reclamation Plan (see Appendix G of the POD). Topsoil from wetland, riparian, and waterbody crossings would be segregated from the areas disturbed by trenching. After backfilling has been completed, the segregated topsoil would be restored to its original location.

4. No refueling or lubricating would take place within 100 feet of wetlands and other waterbodies or drainages. Hazardous materials, chemicals, fuels, etc. would not be stored within 100 feet of wetlands or waters of the U.S.

5. Aboveground facilities and staging areas would not be located within wetlands, riparian areas, or other waters of the U.S., except as required by agency regulations.

6. If trench dewatering is required, the trench would be dewatered in a manner that would prevent silt-laden water from flowing into wetlands or waterbodies.

7. Application of herbicides or pesticides would follow these restrictions: boom and hand gun sprayers would not be used within 25 feet of surface water; broadcast backpack spraying would not occur within 10 horizontal feet of water; only wipe applications (or hand-directed spray using a backpack sprayer) would be allowed within 10 horizontal feet of surface water; and herbicides would not be mixed in an area where an accidental spill could enter a water body. Fertilizers, lime, or mulch would not be used in wetlands unless required by agencies.

8. An environmental inspector will be present during construction of the line in wetlands and other important surface water features to be sure that these areas are either avoided or sufficiently mitigated.

9. Stakes and flagging would be used to identify restricted access areas for protection of wetlands riparian areas and other sensitive surface water features as identified by the BLM.

10. Prior to construction of stream or wetland crossings, set-backs would be established to provide at least a 100-foot buffer for fueling and concrete-coating activities. Other buffers would include set backs of at least 50 feet for all equipment staging areas and 10 feet for temporary storage of spoil material.

11. Erosion control measures (e.g., waterbars; silt fences or check dams; riprap or gabions; erosion control fabric, fiber, or mats; trench plugs), as described in SWPP Plan (Section VII of the POD), would be constructed or installed to minimize storm water transport of sediment from disturbed areas to streams and wetlands.

12. Streams would be crossed during the low-flow period to minimize the extent of sedimentation effects on downstream areas.

13. Natural drainage patterns would be stabilized and restored as close to their original contours as practical (details provided in Appendix G of the POD).

14. Measures would be implemented to prevent the spill of hazardous material and to identify spill response procedures and training for project personnel (Section IV.D in the POD).

15. All project-related storm water and hydrostatic test water discharges would be in compliance with a National Pollutant Discharge Elimination System permit (see Appendix C in the POD).

### 2.5.4 Vegetation and Agriculture

1. Off-road driving would be restricted to the ROW corridor and approved temporary access roads. Signs would be used to identify approved and restricted (i.e., no access allowed) roads.

2. Woody species removed during construction in riparian and/or wetland areas would be replanted from nursery stock or cuttings, as outlined in the project's Reclamation Plan (Appendix G of the POD).

3. Revegetation seed mixes have been developed in coordination with the land management agencies for site-specific conditions regarding climate, soils, and vegetation to maximize vegetation success. The Reclamation Plan (Appendix G of the POD) outlines the procedures (e.g., recontouring, topsoil distribution, seedbed preparation, seed mix application, and follow-up monitoring) that would be followed to return the land to pre-existing vegetative cover and land uses.

4. The project's Noxious Weed Management Plan (Appendix F of the POD) would be implemented to prevent the spread of noxious weeds both during and following construction activities. These measures would include special handling of vegetation and soils stripped from the identified weed infestations, cleaning of equipment to prevent the transport of noxious weed seeds and propagules to other locations in the project area, the use of weed-free mulch and weed-free straw bales to control erosion, and follow-up monitoring and treatment methods that would be implemented following construction.

5. The project's Fire Suppression Plan (Appendix H of the POD) describes the fire prevention and suppression techniques that would be implemented to reduce the potential for a construction-related fire, which could potentially impact vegetation, agricultural resources, and wildlife.

6. Any range improvements such as fences, gates, cattle guards, and developed water sources located within disturbance or access routes would be repaired to the satisfaction of the BLM or private landowner.

7. Soft plugs would be installed at established livestock trails to allow livestock crossing of the trench. Ramps also would be installed at intervals, as needed, to allow livestock that enter the trench a way to exit.

8. If construction would disturb or destroy a natural barrier used for livestock control, the opening would be temporarily closed during construction and permanently closed following construction, as required by the BLM or private landowner.

### 2.5.5 Wildlife, Fisheries, and Special Status Species

For the items below that include seasonal stipulations (Items 2, 3, 6, 7, 8, and 15), PSC would coordinate with the BLM to determine the applicability of specific dates and areas where those stipulations would be implemented. Considerations could include variations in seasonal weather conditions, the type of activity (e.g., surveying, trenching, reclamation), proximity to the ROW (e.g., distance, visual shielding), and time frame of activity. If construction activities were to occur after January 31, 2002, PSC would coordinate with the BLM to determine if additional surveys would be required prior to the initiation of construction.

1. Prior to the initiation of construction, applicable biological surveys would be conducted through areas of suitable habitat for specific species during the appropriate season, as determined by the jurisdictional agencies (e.g., BLM and U.S. Fish and Wildlife Service [USFWS]). Limit stakes and flagging would be used to identify restricted areas for resource protection.

2. To prevent adverse impacts to big game species (e.g., mule deer, elk, pronghorn, and moose) seasonal construction constraints (November 15 to April 30) would be implemented in areas of crucial winter range. Exceptions or waivers to these seasonal construction constraints may be authorized in writing by the BLM's Field Manager on a case-by-case basis.

3. To prevent adverse impacts to elk during calving periods, seasonal construction constraints (May 1 to June 30) would be implemented in areas of elk parturition range. Exceptions or waivers to these seasonal construction constraints may be authorized in writing by the BLM's Field Manager on a case-by-case basis.

4. Raptor nests identified within the proposed disturbance areas would be avoided to prevent their removal. Attempts would be made to avoid trees 10 inches in diameter or greater during construction to protect potential future nest sites. If this were not feasible, PSC would coordinate with the BLM to determine alternative protection measures.

5. To prevent adverse impacts to potential future eagle roost sites along the Sweetwater River, construction would avoid trees 10 inches or greater in diameter at this crossing.

6. Prior to construction during the breeding season (February 1 to July 31), aerial and/or pedestrian breeding raptor surveys, as applicable, would be conducted through areas of

suitable habitat, in coordination with the jurisdictional agencies, to identify any potentially active nest sites in the project area. Appropriate protection measures, including seasonal constraints and establishment of buffer areas, would be implemented at active nest sites on a species-specific and site-specific basis, as necessary. The proposed construction schedule would avoid the raptor breeding period.

7. To prevent adverse impacts to sage grouse breeding sites and their associated habitat, a permanent 0.25-mile construction buffer area would be implemented around known lek sites, on a site-specific basis, as determined in coordination with the BLM. Prior to construction during the breeding season (March 1 to July 7), surveys would be conducted to identify active lek sites in the project area. To prevent adverse impacts to breeding and nesting sage grouse, a seasonal constraint would be implemented within a 2-mile radius of any active lek site. Exceptions or waivers to these seasonal construction constraints may be authorized in writing by the BLM's Field Manager on a case-by-case basis.

8. Prior to the initiation of construction, PSC, in coordination with the BLM, will field verify 6 sage grouse lek sites (31-87-13-01-N, 36-83-13-01-N, 36-83-13-02-N, 34-85-34-01-H, 34-85-34-02-H, and 43-78-34-01-H) that occur within 0.25 mile of the proposed project route. Appropriate protection measures including construction reroutes and/or narrowing the ROW width would be implemented on a site-by-site basis, as determined in coordination with the BLM. Potential effects to other sensitive resources, such as cultural resources, would be considered prior to any rerouting recommendations.

9. If construction were to occur during the mountain plover breeding season (April 10 to July 10), potentially suitable habitat would be delineated along the project ROW. PSC would then coordinate with the BLM to determine whether additional, breeding mountain plover surveys would be warranted to identify any potentially active nest sites in the project area. Appropriate protection measures, including seasonal constraints (April 1 to July 10) and establishment of buffer areas, would be implemented on a site-specific basis, if warranted.

10. If the mountain plover were listed as a federally threatened species, prior to, or during construction, PSC would determine the amount of potentially suitable nesting habitat crossed by the project, based on data from the Wyoming Gap areas. Specific revegetation seed mixes would be developed for areas identified as potentially suitable nesting habitat.

11. Prior to initiation of construction, black-footed ferret clearance surveys would be conducted in active white-tailed prairie dog colonies, and active black-tailed prairie dog colonies that have a burrow density of eight burrows per acre or greater, and that would be directly disturbed by the proposed project.

12. To minimize potential impacts to black-tailed prairie dog colonies, PSC would coordinate with the BLM to determine appropriate protection measures for those colonies that would be directly disturbed by the proposed project. Measures would be determined on a site-specific basis, and would depend on the size, activity status, and location of the colony or complex with respect to the ROW.

13. Measures listed for protection of water resources also would be used to reduce potential impacts to fisheries and their habitat.

14. In perennial streams crossed by trenching, stream banks would be stabilized with use of angular rock (generally 6 to 18 inches diameter or larger if necessary) or wire enclosed riprap structures. Riprap would be placed from the channel bottom to the top of the normal high water line on the bank.

15. In perennial sections of streams containing substrate for fall spawning species (i.e., brook trout in West Cottonwood, Middle Cottonwood, East Cottonwood, and Dry creeks), trenched construction would be avoided between October 1 and November 30.

16. At the temporary bridge crossing of the Sweetwater River, substrate and stream bank vegetation would be restored to pre-construction conditions.

### 2.5.6 Recreation and Visual Resources

1. Measures would be implemented to minimize the visual effects of construction on the Oregon Trail. These measures, as determined by the BLM, may include narrowing of the construction ROW to minimize surface disturbance, implementation of special soil recontouring and revegetation measures to minimize the contrast between the surrounding landscape and the ROW, and boring underneath trail segments.

2. Excavated boulders in the Green Mountain area near Green Mountain Road (MP 118.0 to 120.9 and MP 121.1 to 122.0) would be misted with a landscape varnish (Permeon) to eliminate visual impacts.

3. To prevent unauthorized use of the ROW by off-road vehicles (ORVs), and subsequent potential impacts to soil, vegetation, and wildlife resources, access would be blocked at locations specified by BLM representatives or private landowners. Methods that can be used to prevent access would include fencing, construction of rock barriers or earthen berms, and appropriate signage. Construction vehicles would be allowed access to the ROW.

### 2.5.7 Socioeconomics

1. Any irrigation ditches crossed by the project would be repaired to the landowner's satisfaction.

### 2.5.8 Cultural and Paleontological Resources

1. Prior to project construction, cultural resource inventories would be conducted on all previously uninventoried lands in proposed disturbance areas, in accordance with the Programmatic Agreement (Appendix A).

2. Measures would be implemented to minimize impacts to the Oregon/Mormon/Pony Express, Bridger, and Bozeman Trails. These measures, as determined by the BLM and State Historic Preservation Officer (SHPO), may include narrowing of the construction ROW to minimize surface disturbance, brush beating the ROW, implementation of special revegetation measures to minimize the contrast between the surrounding landscape and the ROW, and archaeological monitoring. All construction activities at trail crossing locations would be conducted in accordance with procedures detailed in the Programmatic Agreement (PA) (Appendix A).

3. Construction monitoring during topsoil stripping and ROW preparation would be conducted where the pipeline route crosses prehistoric site 48NA1060. Monitoring specifications and treatment of any cultural materials discovered during monitoring would be handled according to the procedures detailed in the POD (Appendix I) and PA developed for the project (Appendix A in this EA). This work would be done immediately following centerline staking and well in advance of the main construction effort to provide sufficient time to identify, evaluate, and treat any subsurface materials that might be exposed during topsoil stripping.

4. An open trench inspection would be conducted along the entire 155-mile length of the pipeline and 7-mile lateral. All newly discovered significant cultural resources located in the trench would be recorded and a datum established outside the pipeline construction ROW to assist in relocating the site. Pipe installation and covering would proceed through the area once preliminary documentation is completed. All open trench inspection activities and potential data recovery at significant site locations would be conducted in accordance with the procedures detailed in the POD and PA.

5. If human remains are discovered during construction activities, work would be immediately halted within 328 feet (100 meters) of the discovery, and the discovery reported to the BLM Authorized Officer. Treatment of any human remains would be conducted in accordance with the procedures detailed in the PA.

6. If significant fossiliferous deposits, specifically vertebrate fossil deposits, are located during construction, a paleontologist from the appropriate state or federal agency would be immediately contacted, and measures would be taken to identify and preserve the fossils. In areas where the potential for occurrence is high, a paleontologist would monitor the trench excavation and salvage potentially significant resources.

7. To minimize indirect impacts to cultural and paleontological resources, PSC would educate project-related personnel as to the sensitive nature of the resources; a strict policy of prohibiting collecting of these resources would be implemented.

# 3.0 AFFECTED ENVIRONMENT

This chapter describes the environmental baseline conditions in the area potentially affected by PSC's $CO_2$ Pipeline Project. The BLM's NEPA Handbook (H-1790-1) requires that all EAs address certain Critical Elements of the Human Environment. These critical elements are presented below along with the location in Chapters 3.0 and 4.0 where the element is discussed. If the element does not occur within the project area or would not be affected, this is indicated below, and the element is not discussed further in the EA. This elimination of nonrelevant issues follows the Council on Environmental Quality guidelines as stated in 40 CFR 1500.4.

- Air Quality – Sections 3.1 and 4.1.
- Areas of Critical Environmental Concern – Section 3.4, 4.4, and 4.8.
- Cultural Resources – Sections 3.14.1 and 4.14.1.
- Drinking Water/Ground Water Quality - Sections 3.4 and 4.4.
- Environmental Justice - Sections 3.12 and 4.12.
- Floodplains - Sections 3.4 and 4.4.
- Hazardous or Solid Wastes – discussed for applicable resources (Sections 4.4, 4.5, and 4.6).
- Invasive Non-native and Noxious Plant Species - Sections 3.5.2 and 4.5.2.
- Native American Religious Concerns – Sections 3.14.2 and 4.14.2.
- Paleontological Resources – Sections 3.3 and 4.3.
- Prime or Unique Farmlands - would not be affected.
- Threatened, Endangered, Candidate, or Sensitive Species - Sections 3.5.4, 3.6.2, 3.7.6, 4.5.4, 4.6.2, and 4.7.
- Wetlands and Riparian Zones - Sections 3.5.1 and 4.5.1.

- Wild and Scenic Rivers - would not be affected.

- Wilderness – Sections 3.9 and 4.9.

Numerous technical reports were prepared as support documents for this EA. Copies of these technical reports are available for review at the following locations:

- BLM Casper Field Office
  2987 Prospector Drive
  Casper, Wyoming 82604

- BLM Lander Field Office
  1335 Main Street
  Lander, Wyoming 82520

## 3.1 Air Quality

### 3.1.1 Climate

The climate along the proposed pipeline route is characterized by large annual variations in temperature, low precipitation, and high winds. Climatalogical summaries of temperature and precipitation were examined for four stations near the pipeline route: Reno, Midwest, Wind River 2, and Jeffrey City. Normals, means, and extremes in temperature, precipitation, and winds were examined for Casper, which is located southeast of the approximate midpoint of the proposed route. The annual average maximum temperature is approximately 58°F, and the annual average minimum temperature is approximately 30°F. The record high temperature at Casper was 104°F in July 1954. The record low at Casper was –41°F in December 1990. The annual average total precipitation (water equivalent) is approximately 12 inches. Annual average snowfall is approximately 45 inches, with the northernmost end of the proposed route receiving approximately 22 inches of snow per year. The maximum monthly total of snow, ice pellets, and hail at Casper was 62.8 inches in December 1982. The mean wind speed at Casper is 12.8 miles per hour (mph), and the prevailing direction is from the southwest. The peak gust was 67 mph from the southwest and was recorded in January 1990.

### 3.1.2 Air Quality

All counties through which the proposed pipeline route would pass (Campbell, Johnson, Natrona, and Fremont) are classified as attainment (meeting air quality standards) for all pollutants. The Primary and Secondary National Ambient Air Quality Standards for inhalable particulate matter,

10 microns or less ($PM_{10}$) are 150 micrograms/cubic meter ($\mu g/m^3$) over a 24-hour period and 50 $\mu g/m^3$ over a year, respectively. Campbell, Natrona, and Fremont counties currently have $PM_{10}$ monitors. There are no monitoring sites in Johnson County. Annual average $PM_{10}$ concentrations in these counties vary from approximately 17.5 $\mu g/m^3$ to approximately 33 $\mu g/m^3$ compared to the annual standard of 50 $\mu g/m^3$. The maximum 24-hour $PM_{10}$ concentration measured in these counties since 1994 was 112 $\mu g/m^3$ in 1995 in Campbell County. This compares favorably with the 24-hour $PM_{10}$ standard of 150 $\mu g/m^3$.

## 3.2 Geology and Soils

### 3.2.1 Geology

Geologic conditions throughout the project area are described, since they may constitute hazards to the construction, operation, and/or reliability of the proposed pipeline. Geological hazards that may increase the risk of pipeline construction problems, pipeline failure, or accidents along the pipeline route or at facility locations are identified. Any faults, landslide features, windblown sand deposits, or mined out/mine subsidence areas crossed by or adjacent to the proposed pipeline route are listed in Table 3-1. This table also lists earthquake epicenters within 25 miles of the proposed route. Recent studies by the Wyoming Geological Survey indicate that potential earthquake magnitudes in the four counties crossed by the proposed pipeline are estimated to be approximately 6.75 (as measured on the Richter Scale) in Natrona and Fremont counties, and 6.10 in Johnson and Campbell counties.

### 3.2.2 Soils

The proposed pipeline route is located in two Major Land Resource Areas as described by the Natural Resources Conservation Service (formerly Soil Conservation Service) (1981). The southern portion, MP 112 to approximately MP 205, is located in the Central Desertic Basin and Plateau area. This area is characterized by broad intermountain basins and piedmont plains with elevations ranging from 5,500 to 6,500 feet, including an area up to 7,400 feet near Green Mountain (MP 112 to 127), with an average annual precipitation of 7 to 9 inches and a frost-free season of 110 to 120 days.

The area between MP 205 and Hartzog Draw (MP 267) is located in the northern high plains area. This area consists of gently sloping to rolling dissected plains underlain by shale, siltstone, and sandstone, including areas with steep sideslopes bordering major streams and intermittent drainageways. Elevations range from approximately 4,500 to 5,600 feet, with an average annual precipitation of 9 to 12 inches, and a frost-free season of about 120 days.

## Table 3-1
## Potential Geologic Hazards Along the Proposed PSC $CO_2$ Pipeline

| Distance (miles) | Approximate Location (MP) | Type of Geologic Hazard |
|---|---|---|
| 0.2 | 115.9-116.1 | Mapped landslide feature |
| 0.5 | 116.1-116.6 | Mapped landslide feature |
| 0.2 | 116.7-116.9 | Mapped landslide feature |
| 0.1 | 116.9-117.0 | Mapped landslide feature |
| 0.1 | 117.3-117.4 | Mapped landslide feature |
| 0.1 | 117.5-117.6 | Mapped landslide feature |
| 0.2 | 117.6-117.8 | Mapped landslide feature |
| 0.2 | 117.8-118.0 | Mapped landslide feature |
| 0.1 | 118.2-118.3 | Mapped landslide feature |
| 0.3 | 118.5-118.8 | Mapped landslide feature |
| 0.3 | 118.8-119.1 | Mapped landslide feature |
| 0.2 | 119.4-119.6 | Mapped landslide feature |
| **Total 2.5 miles (22.7 acres)** | | |
| 1.0 | 122.0-123.0 | Active fault traversed – Green Mountain segment of South Granite fault system |
| 1.0 | 157.0-158.0 | Possible fault – inferred location – pipeline crosses North Granite Mountain fault segment |
| 2.5 | 158.5-161.0 | Possible fault – inferred location – pipeline crosses North Granite Mountain fault segment |
| **Total 4.5 miles (40.9 acres)** | | |
| 3.3 | 188.8-192.1 | Windblown sand deposits |
| **Total 3.3 miles (30 acres)** | | |
| NA[1] | 116 | Earthquake epicenter # 5-29-73 |
| NA | 121 | Earthquake epicenter # 8-12-16, III |
| NA | 148 | Earthquake epicenter # 1-24-54, IV |
| NA | 151 | Earthquake epicenter # 4-22-73, V, $4.8_B$ |
| NA | 152 | Earthquake epicenter # 3-25-75, 4.8 $M_B$ |
| NA | 160 | Earthquake epicenter # 1-9-68, 3.8 $M_B$ |
| NA | 170 | Earthquake epicenter # 61-17-73 |
| NA | 171 | Earthquake epicenter # 12-19-75, 3.5$M_L$ |
| NA | 177 | Earthquake epicenter # 11-14-1897, VII |
| NA | 177 | Earthquake epicenter # 6-25-1894, V |
| NA | 183 | Earthquake epicenter # 8-19-59, IV |
| NA | 183 | Earthquake epicenter # 8-27-48, IV |
| NA | 183 | Earthquake epicenter # 10-36-22, IV |
| NA | 183 | Earthquake epicenter # 12-10-1873, III |
| NA | 206 | Earthquake epicenter # 12-11-42, IV |
| NA | 221 | Earthquake epicenter # 3-10-93,3.2 $M_L$ |
| NA | 237 | Earthquake epicenter # 6-3-65, 4.7$M_B$ |
| **Total Sites = 17** | | |

Sources: Case 1986a,b.; Case and Boyd 1984, 1987; Case et al. 1995; Love and Christiansen 1986.
Explanation: III-VII – Intensities derived from Modified Mercalli Intensity Scale
2.0-5.0 – Magnitudes
$M_L$ - Local Magnitude (Richter)
$M_B$ – Body Wave Magnitude
NA[1] = Distance not applicable

Soil association mapping was examined for Natrona, Johnson, and Campbell counties. Detailed Order 3 survey data are also available for most of the area traversed by the proposed pipeline and are contained in the *Soils, Vegetation, and Agriculture Technical Report* for the Amoco Carbon Dioxide Projects EIS (Planning Information Corporation 1988). The various soil map units within the proposed project area were combined into generalized groups of soils to evaluate potential impacts and to determine effective erosion control measures, reclamation, and revegetation potential in the area. Soils that are particularly susceptible to impacts and that may be disturbed during construction are considered "fragile" soils. Delineation of fragile soils was based on the following BLM criteria (BLM 1985a):

- Shallow over bedrock (less than 20 inches);
- Underlain by hard bedrock;
- Sand, loamy sand, or clay-textured surface and subsoil layers;
- Soils containing more than 35 percent course fragments by volume;
- Permeability less than 0.6 inch per hour;
- Water table less than 72 inches;
- Soil pH greater than 8.5, salinity more than 16 millimhos in the upper 40 inches; and
- Occupying slopes steeper than 15 percent.

While the potential for having a slope limitation is indicated by the soil map unit, actual steep slope locations were also identified (from 1:24,000 topographic maps) by MP locations along the pipeline route. Only significant areas of steep slopes (i.e., areas of at least 0.1 mile long) were identified. A list of sensitive soils is provided in Table 3-2.

County soil maps for Natrona and Johnson counties were used to characterize the types of soils crossed by the proposed lateral pipeline route. Typical soils throughout this area consist of shallow to deep, well drained, nearly level to steep soils on hills, ridges, and alluvial fans (Malnor et al. 1997). These soils formed in alluvium and residuum derived from shale. Soil limitations as they relate to pipeline operation and/or construction (limitations such as a high erosion potential or shallow depth to bedrock) are discussed in Chapter 4.0.

## Table 3-2
## Sensitive Soils Along the Proposed PSC $CO_2$ Pipeline Route

| Distance (miles) | Location by Milepost | Major Limiting Factor(s) |
|---|---|---|
| 0.6 | 112.4-113.0 | Sandy, erosion |
| 0.1 | 113.0-113.1 | Slope, erosion, shallow bedrock (soft) |
| 0.2 | 113.2-113.4 | Slope, erosion, shallow bedrock (soft) |
| 0.7 | 113.5-114.2 | Sandy, erosion |
| 0.6 | 114.2-114.8 | Slope, erosion, coarse fragments |
| 0.7 | 114.8-115.5 | Coarse fragments |
| 0.7 | 115.5-116.2 | Slope, erosion, coarse fragments |
| 0.2 | 116.6-116.8 | Coarse fragments |
| 0.3 | 117.0-117.3 | Coarse fragments |
| 0.1 | 117.5-117.6 | Occasional flooding April-June; shallow water table (<1 foot) April-August |
| 0.3 | 117.6-117.9 | Slope, erosion shallow bedrock (hard) |
| 0.5 | 117.9-118.4 | Slope, erosion, shallow bedrock (soft) |
| 0.1 | 118.4-118.5 | Occasional flooding March-August; shallow water table (<1 foot) January-December |
| 0.1 | 119.3-119.4 | Occasional flooding April-June; shallow water table (<1 foot) April-August |
| 2.9 | 123.1-126.0 | Sandy, erosion |
| 0.7 | 126.0-126.7 | Slope, erosion, shallow bedrock (soft) |
| 0.9 | 127.1-128.0 | Slope, erosion, shallow bedrock (soft) |
| 1.1 | 128.0-129.1 | Sandy, erosion |
| 0.7 | 129.1-129.8 | Slope, erosion, shallow bedrock (soft) |
| 0.7 | 129.8-130.5 | Erosion |
| 2.9 | 130.5-133.4 | Slope, erosion, shallow bedrock (soft), sandy |
| 0.5 | 133.4-133.9 | Erosion |
| 0.6 | 133.9-134.5 | Shallow water table (4-6 feet) March-June |
| 2.4 | 134.5-136.9 | Sandy, erosion |
| 1.1 | 136.9-138.0 | Erosion |
| 0.1 | 138.0-138.1 | Shallow water table (4-6 feet) March-June |
| 2.7 | 138.1-140.8 | Erosion |
| 7.2 | 140.8-148.0 | Sandy, erosion |
| 1.2 | 148.0-149.2 | Slope, erosion, shallow bedrock (soft), sandy |
| 0.1 | 150.1-150.2 | Shallow water table (4-6 feet) March-June |
| 0.2 | 150.2-150.4 | Occasional flooding March-June; shallow water table (0-2 feet) April-July |
| 2.6 | 150.4-153.0 | Sandy, erosion |
| 0.2 | 156.7-156.9 | Sandy, erosion |
| 0.6 | 158.5-159.1 | Slope, erosion, shallow bedrock (soft) |
| 0.8 | 159.1-159.9 | Shallow bedrock (soft) |
| 0.2 | 161.2-161.4 | Slope, erosion, shallow bedrock (soft), clay |
| 2.2 | 161.4-163.6 | Shallow bedrock (soft) |
| 1.5 | 164.7-166.2 | Slope, erosion, shallow bedrock (soft) |
| 0.9 | 166.8-167.7 | Clay, pH |
| 0.4 | 167.7-168.1 | Erosion, shallow bedrock (soft) |
| 0.7 | 168.1-168.8 | Slope, erosion, shallow bedrock (soft), clay |
| 0.2 | 168.9-169.1 | Clay, pH |
| 0.3 | 169.1-169.4 | Slope, erosion, shallow bedrock (soft) |
| 1.8 | 169.4-171.2 | Erosion, shallow bedrock (soft) |
| 0.3 | 171.2-171.5 | Clay, pH |
| 0.5 | 171.5-172.0 | Erosion, shallow bedrock (soft) |
| 0.3 | 172.0-172.3 | Clay, pH |
| 0.1 | 172.9-173.0 | Clay, pH |
| 0.3 | 173.5-173.8 | Slope, erosion, shallow bedrock (soft), clay |
| 0.4 | 174.5-174.9 | Clay, pH |
| 0.9 | 174.9-175.8 | Slope, erosion, shallow bedrock (soft), clay |
| 0.4 | 176.1-176.5 | Clay, pH |
| 0.7 | 176.5-177.2 | Slope, erosion, shallow bedrock (soft), clay |

## Table 3-2 (Continued)

| Distance (miles) | Location by Milepost | Major Limiting Factor(s) |
|---|---|---|
| 0.2 | 177.2-177.4 | Sandy, erosion |
| 0.8 | 177.4-178.2 | Slope, erosion, clay, pH |
| 0.2 | 178.2-178.4 | Sandy, erosion |
| 2.1 | 178.4-180.5 | Clay, pH |
| 0.4 | 182.5-182.9 | Slope, erosion, shallow bedrock (soft), clay |
| 0.7 | 183.1-183.8 | Clay |
| 2.8 | 185.2-188.0 | Sandy, erosion |
| 0.7 | 188.0-188.7 | Clay, pH |
| 0.7 | 188.7-189.4 | Erosion, shallow bedrock (soft) |
| 2.7 | 189.5-192.2 | Dune area; sandy, erosion, moderate slope |
| 1.4 | 192.2-193.6 | Clay, pH |
| 0.1 | 193.9-194.0 | Erosion, shallow bedrock (soft) |
| 0.2 | 194.5-194.7 | Slope, gully erosion |
| 1.0 | 195.0-196.0 | Slope, gully erosion |
| 0.2 | 196.0-196.2 | Clay, pH |
| 0.5 | 196.3-196.8 | Erosion, shallow bedrock (soft) |
| 2.5 | 196.8-199.3 | Clay |
| 1.5 | 199.4-200.9 | Slope, erosion, shallow bedrock (soft), clay |
| 1.2 | 201.0-202.2 | Clay |
| 2.4 | 202.2-204.6 | Slope, erosion, shallow bedrock (soft), clay |
| 0.7 | 204.6-205.3 | Erosion, shallow bedrock (soft) |
| 4.1 | 205.3-209.4 | Clay, pH |
| 7.6 | 209.4-217.0 | Slope, erosion, shallow bedrock (soft), clay |
| 3.2 | 217.2-220.4 | Clay |
| 8.5 | 220.4-228.9 | Slope, erosion, shallow bedrock (soft), clay |
| 1.7 | 228.9-230.6 | Slope, erosion, shallow bedrock (hard) |
| 0.6 | 230.6-231.2 | Clay, pH, erosion, shallow bedrock (soft) |
| 4.5 | 231.2-235.7 | Slope, erosion, shallow bedrock (soft), clay, pH |
| 0.2 | 235.9-236.1 | Clay, pH |
| 1.2 | 236.3-237.5 | Slope, erosion, shallow bedrock (soft) |
| 0.4 | 237.5-237.9 | Sandy, erosion |
| 0.4 | 237.9-238.3 | Slope, erosion, shallow bedrock (soft), pH |
| 0.2 | 238.4-238.6 | Occasional flooding – Spring |
| 3.3 | 238.6-241.9 | Slope, erosion, shallow bedrock (soft) |
| 1.1 | 241.9-243.0 | Erosion, pH |
| 2.8 | 243.0-245.8 | Slope, erosion, shallow bedrock (soft-hard) |
| 0.3 | 245.8-246.1 | Clay, pH |
| 0.9 | 246.1-247.0 | Occasional flooding – Spring |
| 1.5 | 247.0-248.5 | Clay, pH, shallow bedrock (soft) |
| 1.3 | 248.6-249.9 | Occasional flooding – Spring |
| 1.5 | 249.9-251.4 | Slope, erosion, shallow bedrock (soft-hard) |
| 0.4 | 251.4-251.8 | Occasional flooding – Spring |
| 7.8 | 251.8-259.6 | Slope, erosion, shallow bedrock (soft) |
| 5.7 | 259.8-265.5 | Slope, erosion, shallow bedrock (soft), pH |
| 0.3 | 0.0-0.3 (Lateral) | Slope, erosion, shallow bedrock (hard) |
| 0.3 | 0.3-0.6 | Clay |
| 0.5 | 0.6-1.1 | Slope, erosion, shallow bedrock (soft), clay |
| 0.2 | 1.1-1.3 | Erosion, pH |
| 0.9 | 1.3-2.3 | Erosion, shallow bedrock (soft) |
| 1.5 | 2.3-3.8 | Slope, erosion, shallow bedrock (soft), clay |
| 3.0 | 3.8-6.8 | Clay, erosion, shallow bedrock (soft) |
| Total = 136.4 miles<br>1,240 acres | | |

## 3.3 Mineral and Paleontological Resources

Wyoming is divided into three major physiographic categories: mountains, the high northwestern plateau, and basins (Glass and Blackstone 1987). The proposed pipeline route would cross several local physiographic provinces including the Great Divide Basin, Sweetwater Uplift, Wind River Basin, Casper Arch, and Powder River Basin. The surface geological formations range from Pre-Cambrian to Recent; however, most of the formations in the project area were deposited during the Cretaceous and Tertiary periods.

Basins contain the majority of the state's mineral resources. Limestone, gypsum, bentonite, and phosphate frequently occur in outcrops along the basin margins. Coal and uranium deposits are found at the surface farther out in the basins. Underlying rock units are reservoirs for oil and gas deposits. Two coal basins would be crossed by the proposed pipeline: the Wind River (MP 164 to MP 194) and Powder River (MP 250 to MP 267). All of the coal reserves in the areas crossed by the pipeline are considered "hypothetical" (BLM 1985a). Hypothetical reserves occur in areas where coal is known to occur because of the geology, but they have not been measured to determine development potential. No coal occurs where ancillary pipeline facilities (valves, meter stations) are proposed.

The proposed pipeline route would cross uranium deposits in the Crooks Gap-Green Mountain area, and coal and sandstone beds of the Fort Union Formation in the Great Divide and Powder River basins (BLM 1985a). The Pumpkin Buttes area in southeastern Johnson County has significant uranium deposits. In these types of geological settings, open-pit or in-situ mining of uranium is usually proposed, depending upon the host bed material. Claims for uranium are staked along much of the proposed pipeline route. However, the economics of uranium production are currently unfavorable, and immediate or near future development of uranium along the pipeline route is not expected (BLM 1985a).

The proposed 7-mile lateral lies along the west-dipping limb of a large north-south trending anticline marking the western extent of the Powder River Basin (VerPloeg et al. 1980). Mineral resources between the Powder River Basin and the southern Bighorn Mountains are scarce. No coal fields or uranium deposits would be crossed by the proposed lateral. The Cody Shale underlies the entire length of the 7-mile lateral, and is considered a potential source for commercially economic bentonite deposits (Harris et al. 1985). The proposed lateral route does not cross any currently active sand, gravel, or bentonite quarries, however it does pass through a mine permit boundary held by the Benton Clay Company (Hausel and Glass 1980).

Paleontology is the geological science dealing with plant and animal life of past geologic periods as known from fossil remains. Fossils are rarely distributed homogeneously throughout a geologic

formation. Formations can indicate only a potential for fossils in any given area. The paleontological sensitivity of a geologic formation is directly related to the significance of the fossils contained within it. Wyoming is a state with areas of high potential paleontological resource value.

Generally, the proposed pipeline route would cross Tertiary geology in the basins and Cretaceous geology around the uplifts, arches, and anticlines. The fossils of the Cretaceous and Tertiary periods record the transition in dominant vertebrate life, as well as the continuing development of invertebrate and plant life forms. The western United States is the primary place where this transition and early Tertiary period is recorded in the fossil remains in geologic formations.

All geologic formations crossed by the proposed route are known to contain fossils. Most have significant sites in areas outside of the proposed route corridor. Table 3-3 shows the geologic formations that have high, moderate, or low potential for containing fossils of significant value. Table 3-3 also lists the 11 paleontological sites that the BLM considers significant. The following levels of paleontological sensitivity are used in this EA:

- High sensitivity formations are those containing known paleontological resources of high significance. Generally speaking, these formations have produced vertebrate fossil remains or are considered to have the potential to produce such remains.

- Moderate sensitivity formations rarely contain paleontological resources within or adjacent to the study area.

- Low sensitivity formations are those with no known paleontological resources, but generally have a resource potential based on their sedimentary origin.

A Class III paleontological inventory has been completed for the proposed pipeline route (Carpenter 1986). Fossils have been previously reported for the Mowry Shale, Frontier Formation, Cody Shale, Mesaverde Formation, Fox Hills Sandstone, Meeteetse Formation, Lance Formation, Fort Union Formation, Wasatch Formation, Wind River Formation, and the White River Formation, all of which occur along the proposed pipeline ROW. However, during the paleontological survey, fossils were found only in the Cody Shale (2 sites), Mesaverde Formation (1 site), Lance Formation (1 site), Wasatch Formation (17 sites), Wind River Formation (3 sites), and Split Rock Formation (1 site). Fossils were collected from all but one of these sites. Most discovered fossil sites are of minor significance. The 11 significant sites are summarized in Table 3-3.

## Table 3-3
## Paleontological Sensitivity of Geologic Formations or Stratigraphic Units Crossed by the Proposed PSC $CO_2$ Pipeline

| Formation/Stratographic Unit[1] | Paleontological Sensitivity[2] | Distance Crossed (miles) |
|---|---|---|
| Alluvium and Colluvium | Low | 1.6 |
| Landslide Deposits | Moderate | 0.4 |
| Dune Sand & Loess | Low | 6.6 |
| Crooks Gap Conglomerate | Low | 4.4 |
| Cody Shale | Moderate | 47.1 |
| Battle Spring Formation | Moderate | 0.8 |
| Miocene Rocks | Moderate – High | 34.8 |
| Upper Miocene Rocks | Moderate – High | 1.6 |
| Precambrian Rocks | Low | 0.8 |
| Bug Formation (Pleistocene or Pliocene) | Moderate – High | 1.4 |
| Chugwater Formation | High | 0.4 |
| Wagon Bed Formation | High | 1.2 |
| Mesaverde Formation | Moderate | 4.0 |
| Fox Hills Sandstone | High | 1.4 |
| Fort Union Formation | High | 0.6 |
| Tullock Member (Ft. Union) | High | 3.0 |
| Lebo Member (Ft. Union) | High | 1.1 |
| Wind River Formation | High | 14.6 |
| Meeteetse Formation and Lewis Shale | Moderate – High | 0.2 |
| Fox Hills Sandstone and Lewis Shale | Moderate – High | 0.8 |
| Lance Formation | High | 4.0 |
| Frontier Formation | Moderate | 1.8 |
| Wasatch Formation | High | 22.4 |
| Total | | 155.0 |

## Known Paleontological Sites[3]

| Formation | Milepost | Primary Interest and Mitigation |
|---|---|---|
| Cody Shale | 202.25 | Plesiosaur Bones – Monitor Blading and OTI[4] |
| | 209-217 | Fossil Bones – OTI |
| Mesaverde | 179.5-180.3 | Potentially Fossiliferous Strata – OTI |
| | 233.5-234.3 | Potentially Fossiliferous Strata – OTI |
| Lance | 239.7 | Possible Dinosaur Skeleton – Test Pits; follow up with OTI |
| Wasatch | 256.0 | Mammal Teeth – Recheck anthills before construction |
| | 257.4 | Mammal Teeth – Recheck anthills before construction |
| | 258.0 | Mammal Teeth – Recheck anthills before construction |
| | 261.0 | Mammal Teeth – Recheck anthills before construction |
| | 261.5 | Gastropods – Collect larger sample before construction |
| | 264.5 | Reexamine blowout before construction |

[1]Love and Christiansen 1985.
[2]BLM 1985a.
[3]Western Cultural Resource Management 1986.
[4]OTI = Open trench inspection.

The proposed 7-mile lateral route lies entirely within the Cody Shale. This formation is a marine shale unit deposited during the Cretaceous period (Love and Christiansen 1986). Marine shales commonly contain abundant fossil remains, however these remains are typically of small marine invertebrates and are not considered paleontologically significant.

## 3.4 Water Resources

### 3.4.1 Surface Water

Four classes of streams are identified by the WDEQ's, Water Quality Regulations entitled "Quality Standards for Wyoming Surface Waters," (WDEQ 1990). All Wyoming waters are designated as belonging to one of the following four water quality classifications. The streams located in the project area are classified as either II, III, or IV under the water quality standards.

- Class I: Those surface waters which shall be maintained at their existing quality and in which no further water quality degradation by point source discharges will be allowed.

- Class II: Those surface waters, other than those classified as Class I, which are determined by the Wyoming Game and Fish Department (WGFD) to be presently supporting game fish or have the hydrologic and natural water quality potential to support game fish.

- Class III: Those surface waters, other than those classified as Class I, which are determined by the WGFD to be presently supporting non-game fish or have the hydrologic and natural water quality potential to support non-game fish.

- Class IV: Those surface waters, other than those classified as Class I, which are determined by the WGFD not to have the hydrologic or natural water quality to support fish.

In addition to the above water quality classifications, the WGFD has developed classifications for fisheries, with an emphasis on trout waters. Fisheries classifications are presented in the aquatic resources section (3.7).

Water quality standards for surface water in the state of Wyoming establish criteria for pH, turbidity, dissolved oxygen, and temperature. In addition, as required by WDEQ, "toxic or potentially toxic materials shall not be present in any Wyoming surface waters in concentrations or combinations which would damage or impair the normal growth, function, or reproduction of human, animal, plant, or aquatic life." Unless, otherwise specified in the Wyoming standards, maximum allowable concentrations are based on the latest edition of Quality Criteria for Water published by U.S. Environmental Protection Agency (USEPA) or WDEQ (1998).

Floodplain issues in the project area would be limited to low-lying topographic areas adjacent to perennial streams and drainages crossed by the pipeline. No Flood Hazard Boundary Maps have been prepared for the vicinity of the pipeline route. In addition, no studies have been conducted by the State of Wyoming of flood-prone areas in the vicinity of the project. The absence of existing data is due primarily to the fact that there are no population centers in the project area.

The proposed pipeline route would traverse the northeast edge of the Great Divide Basin and the Sweetwater Basin before crossing the Granite Mountains. The route would then cross into the headwaters of the Powder River Basin after crossing tributaries of the North Platte River. Except for the Great Divide Basin, all rivers crossed by the project are in the Missouri River Basin.

The proposed pipeline route would cross 11 streams classified as perennial. These streams are listed in Table 3-4. Numerous intermittent and ephemeral streams and minor drainages (approximately 100), also would be crossed by the route. In addition, the pipeline would cross an inactive diversion ditch at MP 150.4; the ditch is approximately 4 feet in width and 18 inches in depth and flows to a nearby reservoir used for stock purposes. No wild or scenic rivers would be crossed by the route.

The pipeline would cross approximately 2.5 miles of the Salt Creek ACEC, in the Casper Field Office Area between MP 220.5 and MP 223 (BLM 1984a). Salt Creek and portions of Teapot Creek have been identified as sensitive drainages. Long-term stream monitoring surveys will continue to be performed in the ACEC as part of the Salt Creek ACEC Management Plan. The Management Plan has been implemented to reduce environmental impacts from energy development in the Salt Creek Drainage (BLM 1984a).

The most significant surface water resource that would be crossed by the pipeline is the Sweetwater River at MP 134.3. This river is rated Class II by the WDEQ at this location. Stream discharges at the Sweetwater River near Alcova station ranged from approximately 10 to 1,240 cubic feet per second (cfs) in 1990 through 1998. In most years, discharges usually ranged from approximately 20 to 800 cfs. Peak flows usually occurred in May and June. The Sweetwater River is used for livestock, irrigation, industrial purposes, municipal supplies, and wildlife.

The Sweetwater River originates at the southeast end of the Wind River Mountains and flows east to the North Platte River. In the vicinity of the pipeline crossing, the drainage from the north side of the river is derived from the Granite Mountains. In general, water quality is good, although suspended sediment and dissolved solids can reach moderately high levels during runoff (BLM

**Table 3-4**
**Perennial Streams Crossed by the Proposed PSC $CO_2$ Pipeline Project**

| Stream Name | Milepost Number | Existing Pipeline Crossing[1] | Water Quality Classification |
|---|---|---|---|
| Unnamed tributary to Crooks Creek | 113.2 | Yes | II |
| Sheep Creek | 116.1 | Yes | II |
| West Cottonwood Creek | 119.5 | Yes | II |
| Middle Cottonwood Creek | 121.2 | Yes | II |
| East Cottonwood Creek | 124.3 | Yes | II |
| Sweetwater River | 134.3 | Yes | II |
| Dry Creek | 150.3 | No | II |
| Poison Spider Creek | 168.7 | No | IV |
| Middle Fork Casper Creek | 179.0 | No | III |
| Salt Creek | 235.9 | No | IV |
| Meadow Creek | 238.5 | No | III |

[1]Indicates whether stream has been previously crossed by other pipelines in the immediate vicinity of the proposed crossing.

1986b). Based on water quality data analyzed for the Sweetwater River just north of Jeffrey City, occasional exceedences of Wyoming aquatic criteria have been shown for ammonia, boron, barium, cadmium, and mercury (Shepherd Miller 1999). Data indicate that total dissolved solids (TDS) and alkalinity are low for the Sweetwater River. Conversely, streams draining areas underlain by Tertiary sandstones and shales (such as the Wasatch Formation) with thin soil cover and sparse vegetation should have poor water quality due to high total suspended solids (TSS). Poison Spider Creek and Salt Creek have high levels of TDS, TSS, and alkalinity.

Perennial streams crossed at the southern end of the pipeline route (i.e., Crooks Creek tributary, Sheep Creek, and Cottonwood Creek tributaries), drain from the Green Mountains. The flow pattern in these streams typically consists of high run-off in the spring after snowmelt and low flows in the fall or early winter months. Surface water in these streams is characterized as predominately calcium bicarbonate, with hardness values exceeding 50 percent (Mariah Associates 1995). Most of these streams receive groundwater discharge from the Battle Spring Formation. Monitoring in some of these streams indicated that concentrations are generally within the WDEQ Class II Fish/Aquatic Life Standards. Occasional exceedences for ammonia, aluminum, iron, and mercury were shown in Middle Cottonwood Creek (Mariah Associates 1995).

### 3.4.2 Groundwater

Groundwaters in Wyoming are classified in order to apply standards to protect water quality. Groundwaters of the state are classified by use and by ambient water quality. Uses include domestic, fish and aquatic life, agriculture, livestock, and industry. Where waters are unappropriated, classification is made by ambient water quality. The WDEQ has established the following groundwater classifications (WDEQ 1993).

- Class I Groundwater of the State - This water is suitable for domestic use. The ambient quality for underground water of this suitability does not have a concentration in excess of any of the standards for Class I Groundwater of the State.

- Class II Groundwater of the State - This water is suitable for agricultural use where soil conditions and other factors are adequate. The ambient quality of underground water of the suitability does not have a concentration in excess of any of the standards for Class II Groundwater of the State.

- Class III Groundwater of the State - This water is suitable for livestock. The ambient quality of underground water of this suitability does not have a concentration in excess of any of the standards for Class III Groundwater of the State.

- Class Special (A) Groundwater of the State - This water is suitable for fish and aquatic life. The ambient quality of underground water of this suitability does not have a concentration in excess of any of the standards for Class Special (A) Groundwater of the State.

- Class IV Groundwater of the State - This water is suitable for industry. The quality requirements for industrial water supplies range widely and almost every industrial application has its own standards.

- Class V Groundwater of the State - This water is found closely associated with commercial deposits of hydrocarbons and/or other minerals or which is considered a geothermal resource. The following divisions of Class V Groundwater are made: Class V (Hydrocarbon Commercial), Class V (Mineral Commercial), or Class V (Geothermal) Groundwater of the State.

- Class VI Groundwater of the State may be unusable or unsuitable for use.

Groundwater along the pipeline route occurs in river alluvium and consolidated geologic deposits of sandstone, lignite, shale, and limestone. Depths of water are generally much greater than

50 feet, except in the vicinity of the Sweetwater River and Poison Spider Creek crossings where depth to groundwater is less than 20 feet. Dry Creek, at MP 150.3, is a perennial stream crossed by the pipeline, which is hydraulically connected to the aquifer under the Sweetwater River Basin. The saturated thickness of this aquifer ranges from 500 to 3,000 feet (Borchert 1987).

Alluvial deposits represent the highest ranked aquifers in terms of potential yield (Wyoming State Geological Survey 1996). Alluvial deposits are composed of clay, sand, and gravel that are derived from stream action and glaciation of upland areas (Boettcher 1972). The water level is usually within a few feet of the stream.

Other groundwater formations underlying the proposed pipeline route are characterized by water-bearing units that occur at greater depths than alluvial deposits. The principal water-bearing units are composed of sandstone, which ranges in size from fine to course grain material. Wells that have been drilled in these aquifers indicated depths to groundwater ranging from approximately 70 to 3,000 feet (Welder and McGregory 1966).

Water downstream from the Sweetwater River crossing is used for irrigation, industrial purposes, and municipal supplies (Planning Information Corporation [PIC] 1988a). However, the central and northern portions of the pipeline route traverses groundwater deposits that are high in sodium and have limited suitability for irrigation. The widespread use is for stock and domestic purposes. The Wasatch Formation has the highest potential for water supply use, with yields ranging up to 500 gallons per minute (gpm). The other primary deposits crossed by the pipeline have very limited yields ranging from 0 to 150 gpm.

Groundwater quality along the route is generally poor with dissolved solids frequently exceeding 1,000 milligrams per liter and high sodium and sulfate contents (Hodson et al. 1973).

## 3.5 Vegetation, Wetlands, Agriculture, and Range Resources

### 3.5.1 Vegetation and Wetlands

Vegetation types within the project area vary according to soil types, topography, climatic conditions, and grazing and land management practices. The predominant vegetation associations identified in the project area are sagebrush steppe and grama-needlegrass-wheatgrass (Kuchler 1975). A total of four unmodified vegetation types occur along the proposed pipeline route: 1) sagebrush-grass; 2) saltbush-greasewood; 3) juniper woodland; and 4) riparian/wetland. Cultivated cropland also occurs along the proposed route (3.3 miles along the mainline) and is discussed in Section 3.5.3. Table 3-5 lists the vegetation types and associated mileages found along the proposed mainline and lateral routes.

## Table 3-5
## Vegetation Types Identified Along the Proposed PSC $CO_2$ Pipeline Project[1]

| Vegetation Types | Beginning MP | Ending MP | Miles |
|---|---|---|---|
| Mainline Route | | | |
| Sagebrush-grass | | | |
| | 112.47 | 113.00 | 0.50 |
| | 113.11 | 113.18 | 0.07 |
| | 113.21 | 113.53 | 0.32 |
| | 113.62 | 114.81 | 1.19 |
| | 114.90 | 115.06 | 0.16 |
| | 115.10 | 116.17 | 1.07 |
| | 116.22 | 117.79 | 1.57 |
| | 117.85 | 119.50 | 1.65 |
| | 119.57 | 134.30 | 14.73 |
| | 134.40 | 158.82 | 24.42 |
| | 158.92 | 168.81 | 9.89 |
| | 169.00 | 178.90 | 9.90 |
| | 179.00 | 181.20 | 2.20 |
| | 184.50 | 200.83 | 16.33 |
| | 201.11 | 235.90 | 34.79 |
| | 235.94 | 238.47 | 2.53 |
| | 238.51 | 242.76 | 4.25 |
| | 242.83 | 242.97 | 0.14 |
| | 243.03 | 243.18 | 0.15 |
| | 243.24 | 243.45 | 0.21 |
| | 243.64 | 267.10 | 23.46 |
| | | Subtotal | 149.56 |
| Saltbush-greasewood | | | |
| | 168.88 | 169.00 | 0.12 |
| | 200.83 | 201.11 | 0.28 |
| | 242.97 | 243.03 | 0.06 |
| | | Subtotal | 0.46 |
| Cropland | 181.2 | 184.45 | 3.30 |
| Juniper woodland | | | |
| | 112.40 | 112.47 | 0.07 |
| | 113.00 | 113.04 | 0.04 |
| | 113.18 | 113.21 | 0.03 |
| | 113.53 | 113.62 | 0.09 |
| | 114.81 | 114.90 | 0.09 |
| | 115.06 | 115.10 | 0.04 |
| | 116.17 | 116.22 | 0.05 |
| | 117.79 | 117.85 | 0.06 |
| | 158.82 | 158.92 | 0.10 |
| | 242.76 | 242.83 | 0.07 |
| | 243.18 | 242.24 | 0.06 |
| | 243.45 | 243.64 | 0.19 |
| | | Subtotal | 0.89 |
| Riparian/Wetland<br>(all wetland unless otherwise noted) | | | |
| | 113.04 | 113.11 | 0.070 |
| | 113.35 | -- | 0.080 |
| | 116.25 (riparian) | -- | 0.002 |
| | 116.30 (riparian) | -- | 0.002 |
| | 116.95 (riparian) | -- | 0.002 |
| | 118.90 | -- | 0.002 |

## Table 3-5 (Continued)

| Vegetation Types | Beginning MP | Ending MP | Miles |
|---|---|---|---|
| | 119.38 | -- | 0.010 |
| | 121.03 | -- | 0.007 |
| | 124.28 (riparian) | -- | 0.010 |
| | 134.25 | -- | 0.023 |
| | 150.10 | -- | 0.001 |
| Riparian/Wetland (continued) | 157.90 | -- | 0.015 |
| | 157.98 | -- | 0.004 |
| | 158.01 | -- | 0.012 |
| | 158.30 | -- | 0.004 |
| | 159.34 | -- | 0.006 |
| | 159.95 | -- | 0.003 |
| | 160.80 | -- | 0.002 |
| | 162.04 | -- | 0.038 |
| | 166.41 | -- | 0.002 |
| | 168.90 | -- | 0.004 |
| | 171.36 | -- | 0.002 |
| | 179.00 | -- | 0.003 |
| | 187.60 | -- | 0.002 |
| | 189.05 | -- | 0.002 |
| | 215.92 | -- | 0.008 |
| | 218.29 | -- | 0.002 |
| | 221.10 | -- | 0.006 |
| | 222.65 | -- | 0.006 |
| | 224.73 | -- | 0.004 |
| | 225.00 | -- | 0.004 |
| | 225.86 | -- | 0.003 |
| | 228.21 | -- | 0.009 |
| | 230.96 | -- | 0.009 |
| | 233.90 | -- | 0.019 |
| | 235.84 | -- | 0.049 |
| | 238.45 | -- | 0.012 |
| | 248.17 | -- | 0.010 |
| | 251.60 | -- | 0.007 |
| | 253.02 (riparian) | -- | 0.002 |
| | 259.62 | -- | 0.006 |
| | | Subtotal | 0.46 |
| | | **Mainline Total** | 154.67 |
| **Lateral Route** | | | |
| Sagebrush-grass | | | |
| | 0.00 | 0.60 | 0.60 |
| | 0.61 | 2.24 | 1.63 |
| | 2.26 | 6.80 | 4.54 |
| | | Subtotal | 6.77 |
| Riparian/Wetland | | | |
| | 0.60 | 0.61 | 0.01 |
| | 2.24 | 2.26 | 0.02 |
| | | Subtotal | 0.03 |
| | | **Lateral Total** | 6.80 |

[1]Because of their relatively small size, wetlands and riparian areas identified along the mainline route were generally only identified as points with an estimated length from 0.001 to 0.01 miles. The total of these lengths was approximately 0.5 mile. Therefore, the total miles of vegetation crossed may vary by approximately 0.5 mile.

Approximately 149.6 miles (97 percent) of the mainline route and 6.77 miles (99.6 percent) of the lateral route would cross sagebrush-grass vegetation type (Table 3-5). Sagebrush-grass vegetation most commonly occurs in valley bottoms, and on plateaus and benches. This vegetation type predominately includes big sagebrush (*Artemisia tridentata*), black sagebrush (*Artemisia nova*), and bud sagebrush (*Picrothamnus desertorum*), as well as antelope bitterbrush (*Purshia tridentata*), and rabbitbrush (*Chrysothamnus* sp.). The major grasses associated with this vegetation type are western wheatgrass (*Pascopyrum smithii*), needlegrass (*Achnatherum* sp.), needle-and-thread (*Stipa comata*), Sandberg bluegrass (*Poa secunda*), threadleaf sedge (*Carex filifolia*), bluebunch wheatgrass (*Pseudoroegneria spicata*), and Indian ricegrass (*Achnatherum hymenoides*). Common forbs include buckwheat (*Erigonum* sp.), bluebells (*Mertensia* sp.), broom snakeweed (*Gutierrezia sarothrae*), and arrowleaf balsam root (*Balsamorhiza sagittata*). Ground cover ranges from 10 to 35 percent (BLM 1985a). The sagebrush-grass vegetation type provides forage for domestic livestock and wildlife and, within the project area, is the vegetation type most commonly used for livestock grazing.

Approximately 0.5 mile (0.3 percent), of the mainline route would cross the saltbush-greasewood vegetation type (Table 3-5). The saltbush-greasewood vegetation type is generally found on terraces associated with drainageways, in level to gently sloping basin areas, and on gently sloping to sloping areas with saline and alkaline soils. Dominant shrub species include Nuttall's saltbush (*Atriplex nuttallii*), shadscale (*Atriplex confertifolia*), fourwing saltbush (*Atriplex canescens*), black sagebrush, big sagebrush, greasewood (*Sarcobatus vermiculatus*), and rabbitbrush. Dominant grass species include Indian ricegrass, western wheatgrass, needle-and-thread, inland saltgrass (*Distichlis spicata*), and alkali sacaton (*Sporobolus airoides*). This vegetation type is used for livestock grazing and wildlife habitat (BLM 1985a).

Approximately 0.9 mile (0.6 percent) of the mainline route would traverse the juniper woodland vegetation type (Table 3-5). The juniper woodland vegetation type occurs on strongly sloping to steep and very steep sideslopes on shallow, rocky soils. The dominant species is Utah juniper (*Juniperus osteosperma*). Common understory species include big sagebrush, rabbitbrush, western wheatgrass, squirreltail (*Elymus elymoides*), broom snakeweed, and Indian ricegrass. This vegetation type is used for livestock grazing and wildlife habitat. Juniper woodland occurs along the proposed route on Green Mountain, adjacent to Horse Creek, and along Pine Ridge.

Based upon review of National Wetland Inventory (NWI) maps and ground and aerial surveys conducted along the route in April and July 2000, approximately 38 wetlands are located along the proposed route (see Appendix B, Table B-1). In addition, five riparian areas are located at MP's 116.25, 116.30, 116.95, 124.28, and 253.02. Five locations that contain both wetland and riparian areas also are located along the route at MP's 119.38, 121.03, 235.84-235.87, 248.17, and 251.60. Eight locations were identified where the proposed route parallels a wetland or

riparian area or other waters of the U.S. within 50 feet for more than 500 feet. These areas occur at MP 118.6-118.8, 121.21, 152.8, 165.05, 192.10-192.5, 232.0, 233.8, and 256.5. A detailed discussion of the surveys and their results is provided in the report, *Summary of Year 2000 Surveys for Wetlands and Other Waters of the U.S. for the Petro Source Carbon Dioxide Pipeline Project,* which is on file at the BLM's Casper, Lander, and Buffalo, Wyoming, Field Offices.

Palustrine emergent and upper intermittent riverine wetlands were the two major types of wetlands identified along the route. The majority of the wetlands were located along major drainages, including the Sweetwater River, Dugout Creek and its tributaries, Salt Creek, and Meadow Creek. Dominant vegetation associated with the majority of the wetlands included sandbar willow (*Salix exigua*), Baltic rush (*Juncus balticus*), alkali grass (*Puccinellia* sp.) prairie cordgrass (*Spartina pectinata*), spikerush (*Eleocharis* sp.), salt cedar (*Tamarix* sp.) and cottonwood (*Populas* sp.) The largest wetland area identified along the route was associated with a series of beaver ponds located at MP 113.35 and consisted of a crossing length of approximately 450 feet. A playa located at MP 189.73, that was identified on NWI maps of the area, was field-checked in January 2001. Based upon the results of the field delineation, no playa occurs at that proposed ROW crossing. No farmed or otherwise modified wetlands were identified as being crossed by the PSC route.

Approximately 169 surface drainage features identified as R4SBA on NWI maps are located along the proposed PSC ROW. R4SBA are defined as intermittent riverine systems with temporarily flooded streambeds. The BLM required aerial confirmation of R4SBA areas identified from NWI maps. These features, which are considered other waters of the U.S., are afforded generally the same protection as those granted to wetlands under the Clean Water Act, although areas with this designation generally do not meet the BLM's guidelines for consideration as wetlands requiring mitigation. Waters of the U.S. include flowing streams, dry channels, and other tributaries to "navigable" waterways, as well as wetlands. A detailed discussion of R4SBA areas, including their locations along the proposed PSC route, is available in the report, *Summary of Year 2000 Surveys for Wetlands and Other Waters of the U.S. for the Petro Source Carbon Dioxide Pipeline Project*, which is on file at the BLM's Casper, Lander, and Buffalo, Wyoming field offices.

Stock ponds or irrigation ditches with associated wetland areas are located along the ROW or lie within 50 feet of the proposed ROW. These locations occur at MP 150.1, 150.28, 172.87, 172.90, 175.8, 178.3, 180.6, 244.63, and 244.67. Generally, the U.S. Army Corps of Engineers (COE) does not consider these types of features jurisdictional wetlands or jurisdictional waters of the U.S.

It should be noted that final regulatory authority for the wetlands identified along the PSC pipeline route lies with the COE and that the COE will provide the final determination and approval of the wetland boundaries.

### 3.5.2 Noxious Weeds

An increasing concern on both public and private lands is the occurrence and spread of noxious weeds and invader plant species. Typical locations for noxious weed infestations are riparian zones, livestock concentration areas, roads and highways, and disturbed soils.

Noxious weed surveys along the proposed pipeline route were required by the BLM as part of environmental impact evaluations and included those species that are known to occur in the vicinity of the project area, as identified by the local Weed Districts and BLM offices. Noxious weed species surveyed for along the ROW are identified in Table B-3 in Appendix B (Noxious Weed Data).

In July 2000, field surveys were conducted for existing noxious weed populations located along the entire proposed PSC ROW by the Natrona County Weed and Pest District and an ENSR field biologist. The surveys identified noxious weed infestations located within the 200-foot-wide pipeline ROW corridor for both the proposed route and the lateral and were conducted by helicopter on July 11 and 12. Additional incidental information on weed populations also was collected during sensitive plant ground surveys conducted along the ROW in June and July 2000. Results of these aerial and ground surveys have been summarized in Tables B-4 and B-5 in Appendix B. Detailed information on the noxious weed surveys is provided in *Summary of the Year 2000 Surveys for Noxious Weeds for the Petro Source Carbon Dioxide Pipeline Project* on file at the BLM's Casper Field Office.

Based upon the results of both surveys, Canada thistle and Scotch thistle were the most numerous of the noxious weed species identified along the ROW. Fifteen populations of Canada thistle and 12 populations of Scotch thistle were located along the route. In addition, 9 populations of salt cedar, 5 populations of Russian knapweed, 4 populations of both leafy spurge and wild licorice, 2 populations of halogeton, and one population each of mullein, musk thistle, and whitetop also were identified along the route.

Seven of the populations identified on the ground overlap with populations identified during the aerial survey. These include the weed populations identified at MP 150.3, 233.5, 238.5, 238.45 to 239.0, and along Lateral MP 0.5, 1.2, and 6.7.

### 3.5.3 Agriculture and Range Resources

One cultivated cropland area is located at MP 181.2 to 184.5. This is a dry land cultivated field that is located approximately 2 miles southeast of Powder River, Wyoming. No prime or unique farmland has been identified as being crossed by the route. The pipeline route predominantly

crosses rangeland. The majority of the route would cross private grazing lands and federal and state lands authorized for livestock grazing. BLM has established grazing allotments on federal land that designate parcels where grazing privileges are authorized. Ranching activities in the project area include cow-calf, yearling, and sheep grazing operations.

Grazing capacities in the project area vary based on vegetation types (range sites), landform, slope, and range condition. Grazing capacities in the area range from 5 to 12 acres per animal unit month (AUM) (BLM 1985a). Areas with low carrying capacities occur in lower average annual precipitation zones (less than 9 inches annually). These areas mainly support a cover of sagebrush, greasewood, and saltbush, and an average grazing capacity of 10 to 12 acres per AUM (BLM 1985a). Grasslands in the 9- to 12-inch average annual precipitation zone with loamy soil sites average 8 to 12 acres per AUM.

The proposed route would cross through the Green Mountain Wild Horse Herd Area, located along the ROW between the Crooks Gap area and Highway 287. There are approximately 300 horses in this herd area.

### 3.5.4 Threatened, Endangered, Candidate, and Sensitive Plant Species

Nine special status plant species were identified as potentially occurring in the project study area (Table 3-6). The following information summarizes known distribution, habitat associations, and survey results for these species. Surveys were conducted in potential habitat (see Table 3-6) along the route and access roads during June 19 through 30 and July 10 through 21, 2000 (Scott and Scott 2000).

Blowout penstemon (*Penstemon haydenii*) is a federal endangered species that is endemic to the Sandhills region of west-central Nebraska. This is a short-lived perennial species that blooms in May and June and occurs in large, multi-stemmed clumps. Blowout penstemon is associated with steep slopes on active sand blowouts with less than 3 percent cover contributed by blowout grass (*Redfieldia flexuosa*), thickspike wildrye (*Elymus lanceolatus*), lemon scurfpea (*Psoralidium lanceolatum*), and rubber rabbitbrush (*Chrysothamnus nauseosus*). This species has been observed on BLM lands in northwestern Carbon County, and additional populations may occur in the sandhills located north of Natrona, Wyoming. No plants were observed along the corridor or access roads.

Another federal endangered plant species that may occur in the project area is Ute ladies'-tresses orchid (*Spiranthes diluvialis*). Ute ladies'-tresses is a perennial terrestrial orchid that is endemic to moist soils near wet meadows, springs, lakes, and perennial streams. This plant generally occurs in small scattered groups in relatively open areas where vegetation is not densely overgrown. Ute

**Table 3-6**
**Special Status Plant Species Potentially Occurring in the Near the Proposed PSC $CO_2$ Pipeline Project Study Area**

| Common Name | Scientific Name | Status | Potential Habitat Areas (MP)[1] | Survey Results[2] |
|---|---|---|---|---|
| Desert yellowhead | *Yermo xanthocephalus* | PT | 120-160 | Not present |
| Ute ladies'-tresses orchid | *Spiranthes diluvialis* | T | 215-267 | Not present |
| Blowout penstemon | *Penstemon haydenii* | E | 112.4-145;188-195 | Not present |
| Colorado butterfly plant | *Guara neomexicana* | PT | None | Not present |
| Many-stemmed spider-flower | *Cleome multicaulis* | PT | 130-170 | Not present |
| Porter's sagebrush | *Artemisia porteri* | SSC | 150-180 | Population at MP176.7 |
| Cedar Rim thistle | *Cirsium aridum* | SSC | 112.4-180 | Not present |
| Devil's Gate twinpod | *Physaria eburniflora* | SSC | 112.4-165 | Not present |
| Nelson's milkvetch | *Astragalus nelsonianus* | SSC | 112.4-175; 195-200 | Population at MP196 |

[1] Scott (2000).
[2] Based on soils, geology, vegetation communities, herbarium records, and known distribution records.

Notes: T= Federally Listed as Threatened.
E= Federally Listed as Endangered.
PT = Proposed for federal Listing as Threatened.
SSC = BLM Species of Special Concern.

ladie's-tresses is best identified during the flowering stage, which occurs from mid-July to mid-September. No plants were found along the portions of the route that were surveyed (MP 215 to 267).

Three other plant species of concern, Colorado butterfly plant (*Guara neomexicana*), desert yellowhead (*Yermo xanthocephalus*), and many stemmed spider-flower (*Cleome multicaulis*) are threatened and may occur in the project area. One of these species, Colorado butterfly, is not expected to occur within the project study area, based on its known distrubutional range (Scott 2000). Suitable habitat locations within the project area are listed in Table 3-6. The many-stemmed spider-flower is found on the semi-moist, open saline banks of shallow ponds, and lakes, along with baltic rush and bulrush. This annual species is mostly found in the Pathfinder National Wildlife Refuge bordering perennial playa lakes with an annual fluctuation in population size. These three species were not observed during surveys within potential habitat along the route.

Four BLM sensitive plant species are known to occur within the project vicinity. Species that may occur along the proposed route include Porter's sagebrush (*Artemisia porteri*), Devil's Gate

twinpod (*Physaria eburniflora*), Nelson's milkvetch (*Astragalus nelsonianus*), and Cedar Rim thistle (*Cirsium aridum*). Porter's sagebrush generally occurs on ashy clay/shale badlands-type outcrops in areas of low vegetative cover. Devil's gate twinpod generally is found on various substrates such as limestone, chalky sandstone, and granite in areas of low plant cover on rims and gravelly ridgetops. Nelson's milkvetch may be found in areas of rocky barrens or stabilized dunes. Cedar Rim thistle is found on hills and slopes with gravelly, rocky, or shaley soils in Fremont and Sublette Counties. Two of the four species were observed during surveys (Scott and Scott 2000). Porter's sagebrush (15 individuals) was observed at MP 176.7. This species also was observed at 13 sites located west of the ROW from MP 175.3 to MP 176.5. Porter's sagebrush is considered to be locally abundant on the badlands of the Wind River Formation located west of the corridor (Scott 2001). Nelson's milkvetch (7 individuals) was present at MP 196. Populations also were observed at seven additional sites, which were located along adjacent roads near MP 196 and between MP 194 and MP 195. This milkvetch species is considered to be common in the area, where it occurs as scattered single plants or small clumps (Scott 2001).

## 3.6 Wildlife

### 3.6.1 Recreationally and Economically Important Species and Nongame Wildlife

As discussed in Section 3.5.1, the proposed project would transect four habitat types including sagebrush-steppe, saltbush-greasewood, sand dune-forb-grass, and riparian/wetland. The project area is characterized by flat to low rolling terrain with intermittent terraces, steep slopes, and rocky ridges. Baseline descriptions of both resident and migratory wildlife include species that have either been documented in the project area or those that may occur in the project region based on habitat associations. Wildlife species that would occur within the majority of the proposed project area are typical of the sagebrush-steppe and saltbush-greasewood communities. Species that inhabit riparian/wetland areas are limited to the Sweetwater River, perennial and intermittent drainages, and ponds and marshes that are either crossed by the proposed project or occur in the surrounding uplands. In the following discussions, the proposed project refers to the study corridor for the proposed main and lateral routes.

#### 3.6.1.1 Big Game Species

Big game species that occur in the region of the proposed project include pronghorn, mule deer, elk, and moose (BLM 2000; WGFD 2000). Seasonal ranges considered to be crucial for these four species during the winter months (November 15 to April 30) include habitats that provide adequate forage and thermal cover for over-winter survival and reproduction requirements, particularly during extreme winters. Important elk parturition range that is utilized from May 1 to

**Table 3-7**
**Big Game Crucial Winter and Partuition Ranges Crossed by the Proposed PSC $CO_2$ Pipeline Route**

| Species | Habitat Type | Mileposts | Miles Crossed |
|---|---|---|---|
| Pronghorn | Crucial Winter | 125.6 – 137.8 | 12.2 |
| Pronghorn | Crucial Winter | 180.4 – 195.9 | 15.5 |
| Mule Deer | Crucial Winter | 136.1 – 136.5 | 0.4 |
| Mule Deer | Crucial Winter | 138.5 – 143.9 | 5.4 |
| Elk | Crucial Winter | 115.4 – 117.5 | 2.1 |
| Elk | Parturition | 115.4 – 117.1 | 1.7 |
| Moose | Crucial Winter | 132.6 – 134.7 | 2.1 |

June 30 also occurs in the vicinity of the proposed route. Table 3-7 summarizes the linear miles of big game crucial winter range and elk parturition range crossed by the proposed ROW.

Pronghorn occur throughout the majority of the region crossed by the proposed project. Pronghorn inhabit grasslands and semi-desert shrublands on flat to rolling topography and browse on shrubby plants, especially sagebrush, throughout the year. The proposed route crosses portions of pronghorn winter/yearlong and yearlong ranges. During the winter, pronghorn generally utilize areas of relatively high sagebrush densities and overall low snow accumulations, on south- and west-facing slopes. Crucial winter range for this species occurs along 27.7 miles of the proposed ROW (Table 3-7).

Mule deer also occur throughout the majority of the region associated with the proposed project, inhabiting virtually all vegetation types. Mule deer feed on a wide variety of plants including forbs, grasses, sedges, shrubs, and trees. The proposed route crosses portions of mule deer winter/yearlong and yearlong ranges. Like the pronghorn, winter habitat for the mule deer occurs in areas of relatively high sagebrush densities and overall low snow accumulation, on south- and west-facing slopes. Crucial winter range for this species occurs along 5.8 miles of the proposed ROW (Table 3-7).

Elk occur in a variety of habitats in the project region including coniferous forests, aspen, shrublands, grasslands, and agricultural areas. The proposed route crosses portions of elk winter/yearlong and yearlong ranges in the Green Mountain area. Crucial winter range for this species occurs in the Green Mountain area, along 2.1 miles of the proposed ROW. Elk parturition range also occurs in the Green Mountain area, coinciding with crucial winter range along 1.7 miles of the proposed ROW (Table 3-7).

Moose typically occupy forested riparian areas that provide browse habitat in fall and winter and aquatic vegetation during the summer. The Sweetwater River drainage is considered to be winter/yearlong and crucial winter range for this species. Moose crucial winter range occurs along 2.1 miles of the proposed ROW (Table 3-7).

#### 3.6.1.2 Small Game Species

Important upland game species that occur within the project area include sage grouse, chukar, gray (Hungarian) partridge, and mourning dove. Sage grouse are considered the most sensitive upland game bird for the region, based on the species' requirements for breeding, nesting, and brooding habitat. Due to this species' sensitivity and declining populations, sage grouse may be petitioned for federal listing in 2001. Sage grouse typically occupy sagebrush communities, breeding in relatively open lek sites (or strutting grounds), and often nesting and brooding in upland areas and meadows in proximity to water. Large expanses of sagebrush occur in central Wyoming that support both breeding and wintering sage grouse.

Surveys for active sage grouse leks were conducted along the proposed project ROW, known secondary access roads, and TUAs using both aerial and ground inventory procedures. The aerial surveys (March 23 to 28, 2000) were used to: 1) determine occupancy of all known historic lek sites within 2 miles from the outside edge of the proposed ROW, known access roads, and TUAs', and 2) locate any new lek sites within 0.5 mile from the outside edge of the proposed ROW. Follow-up ground surveys for sage grouse leks were conducted within 2 miles of the proposed ROW from April 2 to 12, 2000. The purpose of the ground surveys was to verify the status of: 1) historic leks not found to be active during aerial surveys; 2) new lek sites identified during aerial surveys; and 3) areas where individual sage grouse or a number of sage grouse were recorded during the aerial surveys, but breeding displays were not observed. Ground surveys were separated into two survey components, early morning and day-time surveys.

Early morning surveys were conducted in areas up to 2 miles from the proposed ROW and known access roads, where breeding activity could not be verified from the aerial surveys. This included historic leks known to be active within the past 5 years but not found to be active during aerial surveys, new potential lek sites not verified during aerial surveys, and "suspect" areas where individual grouse or a number of grouse were recorded during the aerial surveys, but breeding displays were not observed. Day-time surveys were conducted at those historic lek sites not known to be active within the past 5 years and not found to be active during aerial surveys, and at new confirmed lek sites observed during aerial surveys, located up to 2 miles from the proposed ROW.

A total of 29 historic and 9 newly discovered lek sites were identified within 2 miles of the proposed ROW, known access roads, and TUAs. Of these 29 leks, 4 historic leks and 9 newly discovered leks were found to be active during the 2000 aerial and ground surveys. Six of the active leks were located within 0.25 mile from the proposed ROW. Of these six lek sites, three (31-87-13-01-N, 36-83-13-01-N, and 36-83-13-02-N) were found to be active during the survey period and three (34-85-34-01-H, 34-85-34-02-H, and 43-78-34-01-H) were inactive during the survey period. In addition, seven active leks were located between 0.25 and 2.0 miles from the proposed ROW (ENSR 2000a). A total of 37 miles of nesting habitat associated with the 13 active leks would be crossed by the proposed project. Detailed survey summaries and U.S. Geological Survey (USGS) 7.5-minute topographic maps showing historic and new lek sites in the project area have been submitted to the BLM's Lander, Casper, and Buffalo Field Offices.

Chukar and mourning dove use a variety of habitats. Chukar occur in dry sagebrush, grasslands, and deserts, often along rocky slopes, mesic areas, and rugged canyons (Terres 1991). Chukar populations are known to occur in portions of central Wyoming associated with the proposed project. Mourning dove occur in habitats ranging from deciduous forests to shrubland and grassland communities, often nesting in trees or shrubs near riparian areas or water sources. Mourning dove occur throughout the region associated with the proposed project. Gray (Hungarian) partridge are associated with grasslands, shrublands, and agricultural areas and are considered widespread but not common in the northern portions of the project region.

Numerous species of waterfowl nest and migrate through the region. Key yearlong waterfowl residents include Canada goose, mallard, green-winged teal, northern pintail, gadwall, and American widgeon. Other common summer residents include blue-winged teal, cinnamon teal, northern shoveler, redhead, and ring-necked duck (WGFD 1997).

#### 3.6.1.3 Nongame Species

Common predatory mammal species that occur within habitats that would be crossed by the proposed route include coyote, red fox, raccoon, long-tailed weasel, badger, striped skunk, and bobcat. Representative small mammals that occur within the proposed project area include desert cottontail, white-tailed jackrabbit, least chipmunk, white-tailed prairie dog, black-tailed prairie dog, northern pocket gopher, Ord's kangaroo rat, deer mouse, and beaver (WGFD 1997). A number of bat species also occur within the project region including long-legged myotis, little brown myotis, big brown bat, pallid bat, and western small-footed myotis.

Amphibians and reptiles occupying the region are typically limited by their specific habitat requirements. Key species that could potentially occur within the proposed project area include

the tiger salamander, eastern short-horned lizard, northern sagebrush lizard, and prairie rattlesnake (WGFD 1997).

A variety of passerines (i.e., perching birds) occur within the project region throughout the year; however, they are most abundant during migration and the breeding season. Representative bird species that occur in the project region include Say's phoebe, horned lark, barn swallow, black-billed magpie, American crow, western meadowlark, sage thrasher, and European starling (WGFD 1997). Migratory passerines and raptors are protected under the Migratory Bird Treaty Act (Federal Register 2001).

Raptor species that could potentially occur as residents or migrants within the region include eagles (bald and golden eagles), buteos (e.g., red-tailed hawk, Swainson's hawk, ferruginous hawk), falcons (e.g., peregrine falcon, prairie falcon, American kestrel), accipiters (e.g., northern goshawk, Cooper's hawk, sharp-shinned hawk), owls (e.g., great-horned owl, burrowing owl, long-eared owl, short-eared owl), northern harrier, and turkey vulture. Breeding raptor surveys were conducted along the proposed ROW, known secondary access roads, and TUAs using both aerial and ground inventory procedures. The aerial raptor surveys were conducted on April 27 and 28, 2000, to identify occupied territories or active nest sites located within 0.75 mile from the outside edge of the proposed ROW boundary. Aerial surveys focused on cliff nesters (e.g., golden eagle, falcon species), species that commonly build nests on deciduous trees or on promontory points (e.g., red-tailed hawk, Swainson's hawk, ferruginous hawk, great-horned owl), and ground nesters (e.g., ferruginous hawk, northern harrier). The aerial surveys did not concentrate on cavity nesters (e.g., American kestrel), sub-terranean nesters (e.g., burrowing owl), or most conifer nesters (e.g., accipiters), based on visibility limitations from the helicopter. Additional ground surveys were conducted from May 3 to 5, 2000, at those nest sites where either breeding status could not be determined or in areas that were identified as potentially supporting nesting birds during the aerial surveys.

Based on the results of the year 2000 breeding raptor surveys, 91 nest sites and 3 occupied breeding territories were identified within 0.75 mile of the proposed ROW, known access roads, and TUAs. Of these 91 nest sites, 14 were active, 73 were inactive, and 4 were of unknown status (ENSR 2000b). Three additional breeding territories and/or defended nest sites (red-tailed hawks and Swainson's hawk) also were recorded. The active nest sites were occupied by golden eagles (5), red-tailed hawks (6), ferruginous hawks (2), and great horned owl (1). Detailed survey summaries and USGS 7.5-minute topographic maps showing historic and new nest sites, and occupied breeding territories in the project area have been submitted to the BLM's Lander, Casper, and Buffalo Field Offices.

### 3.6.2 Threatened, Endangered, Candidate, and Sensitive Wildlife Species

A number of terrestrial special status species including federally listed, federally proposed, and federal candidate; and BLM and state sensitive species were identified for the project area (Oberlie 2001; USFWS 2000; Wyoming Natural Diversity Database [WYNDD] 2000). The potential occurrence of special status species within the project area was based on range, known distribution, and the presence of potentially suitable habitat crossed by the proposed route. In accordance with Section 7 of the Endangered Species Act, the BLM initiated informal Section 7 consultation with the USFWS for the project. The federally listed, proposed, and candidate wildlife species identified for this project are presented in Table 3-8.

**Table 3-8**
**Special Status Wildlife Species Identified for the Proposed Petro Source $CO_2$ Pipeline Project**

| Common Name | Scientific Name | Status |
|---|---|---|
| MAMMALS | | |
| Black-footed ferret | *Mustela nigripes* | Endangered |
| Black-tailed prairie dog | *Cynomys ludovicianus* | Candidate |
| BIRDS | | |
| Bald eagle | *Haliaeetus leucocephalus* | Threatened[1] |
| Mountain plover | *Charadrius montanus* | Proposed |

[1]The species has been proposed for delisting by the USFWS; the final rule on the decision is pending.

#### 3.6.2.1 Mammals

**Black-Footed Ferret**

The black-footed ferret (*Mustela nigripes*) is federally listed as endangered and is currently designated as a Wyoming Species of Special Concern (SSC). Black-footed ferrets are considered obligate associates to prairie dogs, which constitute their primary food source and provide burrows for shelter. Although the proposed project occurs within the historic range of the black-footed ferret, this species is presently restricted to reintroduced populations in Montana, South Dakota, Utah, Arizona, and Carbon County in Wyoming; however, remnant ferret populations may exist in portions of its former range (Hillman and Carpenter 1980).

Potentially suitable habitat for ferrets is determined by the size and density of active prairie dog colonies. It is assumed that all colonies crossed by the project ROW are associated with larger

complexes; therefore, the number of acres does not apply, and whether these colonies meet the applicable USFWS' 1989 ferret guidelines would be limited to activity levels and relative burrow density. Two species of prairie dog, white-tailed and black-tailed, occur in the project area. A total of 4 white-tailed prairie dog colonies would be crossed by the proposed project ROW, based on the spring 2000 aerial surveys and data provided by the BLM. All four of these colonies meet the USFWS 1989 guidelines for ferrets (i.e., active colonies with a minimum of 8 burrows per acre) (USFWS 1989). In addition, 8 black-tailed prairie dog colonies also would be crossed by the ROW. Although only one of the 12 prairie dog colonies that would be crossed by the ROW has been confirmed to be the black-tailed species, it is assumed that all prairie dog colonies that occur north of MP 220 support the black-tailed prairie dog. This assumption is based on the historical distribution of the two prairie dog species in the project region and the appearance of the eight colonies that occur north of MP 220. Of the eight black-tailed prairie dog colonies crossed by the ROW, only one has been confirmed as meeting the USFWS' guidelines established for the black-footed ferret. The status of the remaining seven colonies is unknown.

In addition, nine colonies were historically recorded by the WGFD prior to 1988, but were not observed during the spring 2000 surveys. It is assumed that these nine colonies were either historically mismapped (i.e., no global positioning system coverage), are currently inactive, or were not readily apparent during the spring 2000 surveys. Given the recent survey results, these nine colonies were eliminated from further analysis.

**Black-tailed Prairie Dog**

The black-tailed prairie dog (*Cynomys ludovicianus*) was recently classified as a federal candidate species. It also is designated as a Wyoming SSC. In Wyoming, the historical range of this species included much of eastern Wyoming and the Bighorn Basin (WGFD 1996). The current distribution of this species is similar to the historic range and includes mountain-foothills and shrublands along the southern end of the Bighorn Mountains as a habitat link between the eastern grasslands and the Bighorn Basin. Black-tailed prairie dogs inhabit shortgrass prairie and mixed grasslands that contain suitable upland soil types for constructing extensive burrow systems.

Aerial and ground black-tailed prairie dog surveys were conducted from March 23 to 28, and April 2 to 11, 2000, respectively, to determine location, size, and density of active colonies. As stated above, the proposed ROW would cross 8 black-tailed prairie dog colonies. However, the status of 7 of these colonies is unknown. All of the black-tailed prairie dog colonies that occur within the project area are assumed to be part of the larger midwest black-tailed prairie dog complex.

**Swift Fox**

The swift fox (*Vulpes velox*), a BLM sensitive species and a Wyoming SSC, was removed from the USFWS candidate list on January 8, 2001. The swift fox was once distributed throughout the prairie regions from southern Canada, south through the Great Plains of the United States (WGFD 1996). Currently, this species exists in several highly disjunct populations in small portions of its historic range. Swift fox habitat is composed of level to gently sloping topography (<15 percent slope) containing an open view of the surrounding landscape, abundant prey, and lack of predators and competitors (USFWS 1994). In Wyoming, this species occurs in the eastern one-quarter of the state and inhabits short- and mid-grass prairies, often using highways and railroad ROWs for denning, and cultivated fields, old corrals, and buildings for foraging (WGFD 1996).

Few observations of swift fox have been reported in the vicinity of the proposed route, specifically in Natrona County (Woolley et al. 1995). However the majority of the reported observations for this species are in eastern Wyoming (Oberlie 1999a). Many of these observations have been reported in habitats considered to be atypical for this species (e.g., greasewood) (Oberlie 1999a). Although the swift fox could potentially occur within the project area, the potential for occurrence is low.

#### 3.6.2.2 Birds

**Bald Eagle**

The bald eagle (*Haliaeetus leucocephalus*) is federally listed as threatened and is protected under the Bald Eagle Protection Act. This species was proposed to be delisted by the USFWS on July 6, 1999; the final rule on this decision is pending. Additionally, this species is designated as a Wyoming SSC. Most nesting bald eagles in Wyoming occur in the greater Yellowstone area, including Teton County, Grand Teton National Park, and Yellowstone National Park. However, additional pairs of eagles currently occur in Carbon County (WGFD 1996). No historic or current nest sites have been documented within or adjacent to the proposed project ROW (BLM 2000). The aerial surveys conducted for breeding raptors (April 27 and 28, 2000) examined potential bald eagle suitable nesting habitat (e.g., Sweetwater River) up to 1 mile on either side of the ROW. No individual bald eagles or bald eagle nest sites were found during the raptor surveys. No winter concentration areas have been recorded within or adjacent to the proposed project ROW (BLM 2000); however, individual bald eagles have been observed using the Sweetwater River corridor during the winter (Oberlie 1999b). No historic or active communal roost sites, winter roosts, or winter concentration areas have been identified within 2 miles of the proposed route (BLM 2000).

Two historic bald eagle winter roost site areas occur from approximately 2 to 5 miles from the proposed route in the Pine Mountain area (BLM 2000).

**Mountain Plover**

The mountain plover (*Charadrius montanus*) is currently proposed to be federally listed as threatened; the final rule by the USFWS is pending. Additionally, this species is designated as a Wyoming SSC. The historic breeding range of the mountain plover included short-grass prairies from extreme southern Canada, south through the Great Plains of the United States. Currently, mountain plovers only nest in isolated areas throughout their range (WGFD 1996). In Wyoming, the breeding range of this species is widespread and relatively common in favored habitat; however, population levels and trends are not known (WGFD 1996). Breeding habitat for this species appears to vary geographically. However, throughout its range suitable breeding habitat is characterized primarily by shortgrass prairie grassland where grazing is intensive, or in areas of fallow fields or active prairie dog towns (Knopf 1999). In addition, breeding plovers also have been documented on well drill pads (USFWS 1999). Areas of flat bare ground appear to be the most prominent characteristic of suitable breeding habitat for plovers (Knopf 1999). In Wyoming, mountain plovers have been documented in areas of low (less than 4-inches tall) vegetation with little to no topography, shortgrass prairies, low shrubs, and on dry mudflats (Parrish et al. 1993). No historic nest sites were identified within 0.25 mile of the proposed ROW. However, based on its known distribution, documented observations within the project region (WGFD 1997), and Wyoming Gap analysis data, mountain plovers could potentially occur within the project area.

**Burrowing Owl**

The burrowing owl (*Athene cunicularia*) is designated as a BLM sensitive species. This species breeds from south-central British Columbia, south through most of the western United States, to Central and South America. Population declines over the past century have been primarily due to habitat loss, habitat fragmentation, and pesticide poisoning (Jones 1998). The burrowing owl typically inhabits level, open areas in heavily grazed or low-stature desert vegetation, with available burrows for nesting and cover (Johnsgard 1988). Nesting habitat consists of abandoned mammal burrows on flat, dry, and relatively open terrain (Johnsgard 1988). To date, one historic nest site has been identified within 0.1 mile of the project ROW (ENSR 2000b). However, based on the habitats that would be crossed by the project ROW, additional burrowing owl nest sites could occur in the vicinity of the proposed project ROW.

#### 3.6.2.3 Other Sensitive Species

A number of other sensitive animal species were identified for the proposed project based on information provided by the BLM (Oberlie 2001; WYNDD 2000). Their potential occurrence in the project area was based on range, known distribution, and potentially suitable habitat crossed by the proposed project route.

A number of sensitive small mammal species could occur within the project area including long-eared myotis (*Myotis evotis*), fringed myotis (*Myotis thysanodes*), spotted bat (*Euderma maculatum*), and Townsend's big-eared bat (*Corynorhinus townsendii*). One known Townsend's big-eared bat hibernacula roost has been identified approximately 2 miles from the project ROW in Natrona County (VanFleet 2000; WYNDD 2000). Also, as discussed in Section 3.6.2.1, 4 white-tailed prairie dog (C*ynomys leucurus*) colonies would be crossed by the proposed ROW.

Sensitive bird species that utilize riparian/wetland habitats in the project region include birds such as the common loon (*Gavia immer*), white-faced ibis (P*legadis chihi*), American bittern (*Botarus lentiginosus*), and Wilson's phalarope (*Phalaropus tricolor*), and amphibians such as the northern leopard frog (*Rana pipiens*), Great Basin spadefoot (*Spea intermontana*), boreal toad (*Bufo boreas boreas),* and the spotted frog (*Ranus pretiosa*).

Upland bird species, including merlin (*Falco columbarius*), sage thrasher (*Oreoscoptes montanus*), loggerhead shrike (*Lanis ludovicianus*), Brewer's sparrow (*Spizella breweri*), sage sparrow (*Amphispiza billineata*), Baird's sparrow (*Ammodramus bairdii*), and McCown's longspur (*Calcarius mccownii*), also could be present in shrubland and grassland habitats crossed by the proposed route.

## 3.7 Aquatic Resources

Of the 11 perennial streams crossed by the proposed PSC pipeline route, six contain recreational game fish species. Two additional streams (Cooper and Horse Creeks) are intermittent at the proposed crossings, but they support game fish in perennial reaches or downstream areas. Table 3-9 provides a listing of recreational fisheries crossed by the pipeline. The pipeline would cross the Sweetwater River in a reach designated as Class IV approximately 1 or 2 miles downstream from the Class III reach. The proposed pipeline would cross one stream (East Cottonwood Creek), that is classified as trout waters of regional importance (Class III), (WGFD 1987). However, this stream is intermittent in the area of the proposed crossing. The pipeline would cross four other streams that are classified as low production trout fisheries (Class IV), incapable of sustaining substantial fishing pressure (Table 3-9). No other recreational fisheries

**Table 3-9**
**Recreational Fisheries Crossed by the Proposed PSC $CO_2$ Pipeline**

| Stream | Species | Fishery Classification[1] | Milepost |
|---|---|---|---|
| Sheep Creek | Brook Trout | IV | 116.1 |
| West Cottonwood Creek | Brook Trout | IV | 119.5 |
| Middle Cottonwood Creek | Brook Trout | IV | 121.2 |
| East Cottonwood Creek | Brook Trout | III | 124.3 |
| Sweetwater River | Brown, Rainbow Trout | IV | 134.3 |
| Dry Creek | Brook Trout | IV | 150.3 |

[1] Class I - Premium trout waters - fisheries of national importance.
Class II - Very good trout waters - fisheries of statewide importance.
Class III - Important trout waters - fisheries of regional importance.
Class IV - Low production trout waters - fisheries of local importance, incapable of sustaining substantial fishing pressure.

Note: Intermittent sections of Horse Creek and Cooper Creek would be crossed by the pipeline. These streams support trout species in perennial reach located upstream of the crossing in Cooper Creek (cutthroat) or downstream of the crossing in Horse Creek (brown, rainbow, cutthroat).

Source: WGFD 1987.

would be crossed by the proposed route. Fisheries information is summarized for the perennial streams to be crossed by the pipeline.

### 3.7.1 Sweetwater River

In the Class IV section of the Sweetwater River, game fish species consist of brown trout and rainbow trout. Trout production is relatively low, as indicated by total catches of 1 to 2 trout/300-foot sampling reach (Dufek 1996). Nongame species collected in this section of the river included white sucker, longnose sucker, creek chub, lake chub, longnose dace, and carp. Habitat at the proposed crossing consists of pools and runs, with depths ranging from less than 0.5 to 4 feet in March 2000. Depth and undercut banks provide cover for fish.

### 3.7.2 Sheep Creek

This tributary to Crooks Creek supports brook trout in the middle and lower sections of the stream. At the proposed crossing, shallow depths and low flows limit trout habitat.

### 3.7.3 Cottonwood Creek Tributaries and Dry Creek

West Cottonwood, Middle Cottonwood, East Cottonwood, and Dry creeks support brook trout. The lower portion of Middle Cottonwood Creek near its confluence with the Sweetwater River also occasionally supports brown, rainbow, and cutthroat trout. Nongame species potentially found in these streams include longnose sucker, white sucker, shiners, creek chub, and longnose dace (Dufek 1996). The lower portion of Dry Creek near Pathfinder Reservoir also contains other trout species such as rainbow trout, brown trout, and Snake River cutthroat trout.

### 3.7.4 Cooper and Horse Creeks

Cooper and Horse creeks contain trout species in perennial reaches located either upstream or downstream of the proposed crossing. Cutthroat trout occur in Cooper Creek, with the closest perennial reach being approximately 2 to 3 miles upstream of the proposed crossing. Horse Creek supports rainbow, brown, and cutthroat trout in a perennial reach located approximately 1 mile downstream of the proposed crossing.

### 3.7.5 Poison Spider, Coyote, Middle Fork Casper, and Salt Creeks

Fisheries in these streams are composed of nongame native and introduced species (Wolff 2000). Species potentially occurring in these streams include fathead minnow, plains killifish, longnose dace, shiners, and white sucker.

### 3.7.6 Threatened, Endangered, and Sensitive Species

Four Special Status 3 fish species potentially occur in two of the perennial streams crossed by the pipeline. A Special Status 3 species is defined as a population that is widely distributed throughout its native range and appears stable; however, its habitats are declining or vulnerable. Lake chub and mountain sucker potentially occur in the Sweetwater River (Wolff 2000). Plains minnow and flathead chub potentially are present in Salt Creek.

## 3.8 Land Use and Recreation

### 3.8.1 Land Use

Existing land use along the proposed pipeline consists primarily of livestock grazing, wildlife habitat, open space, and dispersed recreation. Existing pipelines and utilities also are located in the project area. The proposed route would parallel other pipelines, electric power distribution lines, and roads for approximately 43 miles, or 27 percent of the total pipeline length.

The proposed pipeline would traverse lands under the regulatory and management control of the BLM, the State of Wyoming, and private land, which is regulated by county land use plans and ordinances. Approximately 57 percent (93 miles) of the pipeline would cross federal lands, 38 percent (62 miles) would cross private lands, and 5 percent (7 miles) would cross state lands.

The lands under the regulatory and management control of the BLM include portions of the Lander Field Office Area, the Casper Field Office Area (formerly the Platte River Resource Area), and the Buffalo Field Office Area. The management of public lands and resources in the Lander Field Office Area is directed and guided by the BLM's Final RMP/EIS (BLM 1986b) and the Record of Decision for the Lander RMP (BLM 1987b). The Lander Field Office Area has been divided into 13 management units, including WSAs. The proposed pipeline would cross portions of three management units including the Green Mountain, Beaver Creek, and Gas Hills Management Units. The WSAs are discussed in Section 3.10. BLM lands within the Green Mountain Management Unit are open for the location of utility and transportation systems. These systems are required to be concentrated in existing utility corridors whenever possible. Approximately 2.4 miles of the proposed route (MP 115.7 to MP 118.1) within the Green Mountain Management Unit would cross a designated ACEC. This ACEC includes the crucial elk winter range.

BLM lands within the Beaver Creek Management Unit are open for the construction of major utility systems except for three designated areas: the Oregon/Mormon Pioneer Trail Corridor, the Sweetwater Canyon, and the Sweetwater Rocks (BLM 1986b). ROWs may be granted within these three high-resource value areas, if no feasible alternative route or designated corridor is available. The BLM encourages utility systems to be concentrated in existing corridors whenever possible (BLM 1986b). Approximately 7,000 acres of federal land within the Beaver Creek Management Unit are within a designated ACEC. This ACEC designation provides management emphasis to protect significant sites and segments along the Oregon/Mormon Pioneer Trail (e.g., ruts, swales, graves, campsites, and pristine settings) (BLM 1986b). The proposed route would not cross the Oregon/Mormon Pioneer Trail in the Beaver Creek Management Unit.

Major utilities are allowed in the Gas Hills Management Unit, except for along the Oregon/Mormon Pioneer Trail corridor and the Sweetwater Rocks. ROWs for major utility systems may be granted if no feasible alternative route or designated ROW corridor is available. Utility systems are required to be concentrated in existing corridors whenever possible (BLM 1986b). Significant sites and segments along the Oregon/Mormon Pioneer Trail (e.g., ruts, swales, graves, campsites, and pristine settings) are designated ACECs (BLM 1986b). The proposed route would cross the Oregon/Mormon Pioneer Trail at MPs 132.0, 132.2, and 132.3 (BLM 1985a).

The management of public lands and resources in the Casper Field Office Area is directed and guided by the Record of Decision for the Platte River RMP/Final EIS (BLM 1985b). The Casper Field Office Area has been divided into 14 resource management units (RMU). The proposed pipeline would cross portions of 3 RMUs including the Pine Mountain and Goldeneye Reservoir, Salt Creek, and Remaining Platte River Resource Area Management Units (BLM 1984a).

One corridor is designated along U.S. Highway 20/26 to accommodate major ROWs within the Pine Mountain-Goldeneye Reservoir RMU (BLM 1985b). Approximately 3.1 miles (MP 185.3 to MP 188.4) of the proposed route would be located in the general corridor along U.S. Highway 20/26. There are no designated ACECs within the Pine Mountain-Goldeneye Reservoir RMU (BLM 1984a).

In the Salt Creek RMU, corridors are designated for major ROW placement along Wyoming Highway 259/U.S. 87 and Wyoming Highway 387 (BLM 1985b). The proposed route is not located within a designated corridor. Approximately 2.5 miles of the proposed route would cross the Salt Creek ACEC, which is managed to protect sensitive, highly erodible soil, water, and air resources (BLM 1985b).

The remaining Platte River Resource Area RMU comprises all lands in the Casper Field Office Area not included in the other 13 RMUs. Five corridors are designated in the RMU, three of which are mentioned above. The remaining two include the Oregon Trail and Poison Spider Road (BLM 1985b). The proposed pipeline is located within a short segment (3.1 miles) of the general corridor along U.S. Highway 20/26. The Platte River Resource Area RMP places the following restrictions on proposed ROWs outside designated corridors:

- Placement would be adjacent to existing facilities or disturbances.
- Cross-country ROW placement would be allowed only when placement in a designated corridor or adjacent to an existing facility is not practical or feasible.
- New corridors would be designated only when placement as indicated above is not practical and when the environmental impacts can be adequately mitigated (BLM 1985b).

The management of public lands and resources in the Buffalo Field Office Area is directed and guided by the Record of Decision for the RMP/Final EIS (BLM 1985c). The Buffalo Field Office Area was not divided into separate management units in the RMP. The Buffalo Field Office Area's management policy is to locate transmission and transportation facilities within designated corridor areas (BLM 1985c). There are several designated corridors within the Field Office Area. The proposed pipeline route is not located within any of the designated corridors. The Buffalo

Field Office Area RMP places the following restrictions on future corridor adjustments and new corridor designations: all corridor adjustments and new designations will be made only when facility placement within an existing designated corridor is incompatible or unfeasible and when the environmental consequences can be adequately mitigated (BLM 1985c). There are no designated ACECs within the Buffalo Field Office Area (BLM 1985c).

### 3.8.2 Recreation

Recreation resources are areas for the enjoyment and relaxation of both residents and visitors. These areas include lands formally managed for recreation purposes such as recreation sites or parks and other areas where no facilities are provided such as sightseeing, hiking, rock climbing, hunting, fishing, or ORV use areas. Recreation resources can be further categorized as non-urban or dispersed resources such as rural parks, campgrounds, rivers, or undeveloped open lands, and urban-oriented developed resources such as parks and recreation facilities within the boundaries of cities and towns.

The primary urban resources in the project area occur in the communities and cities of Casper, Midwest, Lander, Rawlins, Natrona, Edgerton, Kaycee, and Powder River. Casper is the largest municipality and is centrally located along the proposed pipeline. Therefore, it is likely that the majority of pipeline workers would reside there. Camping by project construction workers and their families could occur in areas where other housing is not readily available or where workers would otherwise prefer to camp. Details regarding housing availability, including recreational vehicle (RV) sites and campgrounds, are provided in Section 3.11.

Non-urban recreation resources in the project area are primarily available on public lands managed by the BLM. Most of the recreational use on public land in the Lander Field Office Area is widely dispersed. Visitors generally participate in a wide variety of recreational activities, including picnicking, hunting, camping, winter sports, and fishing (BLM 1986b). There are three Recreation Management Areas (RMAs) in the project area, including the Oregon/Mormon Pioneer National Historic Trail, the Green Mountain area, and the Sweetwater Rocks WSAs (more details regarding WSAs can be found in Section 3.10). There are two developed recreation areas in the project area, including the Split Rock Interpretive Site and Cottonwood Campground, located in the Green Mountain area (BLM 1986b). The proposed route crosses areas that are designated open for ORV use or limited to existing roads and trails (BLM 1986b).

Recreation in the Sweetwater Rocks area includes hiking, rock-climbing, and camping. This area is used by the National Outdoor Leadership School based in Lander, to conduct courses in rock-climbing, wilderness leadership, and outdoor education.

The proposed route does not cross any RMAs or developed recreation areas in the Casper Field Office Area (BLM 1984a, 1985b). The Goldeneye Wildlife and Recreation Area is approximately 5.5 miles southeast of the proposed route (BLM 1984a). ORV use in the project area is limited to existing roads and vehicle routes; however, temporary ORV use is allowed for performance of necessary tasks (BLM 1985b).

The proposed route does not cross any RMAs or developed recreation areas in the Buffalo Field Office Area (BLM 1984b, 1985c). ORV use in the project area is either open or limited to designated roads (BLM 1984b, 1985c).

Big game hunting occurs throughout the project area and is regulated by the WGFD. In the Lander Field Office Area, licenses to hunt elk and mule deer in the Green Mountain area are highly sought after, and the Sweetwater Rocks area also is popular for mule deer, elk, and antelope hunting. Mule deer and antelope hunting also occurs in the project area between Wyoming Highway 20/26 and I-25 (MP 188 to 228). In the BLM Casper Field Office Area, elk hunting occurs along the portion of the route between Dry Creek Road and Poison Spider Creek (MP 151 to 169).

## 3.9 Wilderness

There are no designated wilderness areas within 10 miles of the proposed pipeline. However, there are four WSAs within 10 miles of the proposed pipeline: Two of these (Split Rock WSA and Miller Springs WSA) actually touch the pipeline ROW. Collectively, these four WSAs are referred to as the Sweetwater Rocks WSAs and are located in the BLM's Lander Field Office Area. The BLM has studied these areas and analyzed the effects on present or potential resource uses that would result from wilderness designation or nondesignation. The results of this analysis are reported in the Lander Final Wilderness EIS (BLM 1990). The Wilderness EIS was prepared in response to Section 603 of the Federal Land Policy and Management Act of 1976 (FLPMA).

The Lankin Dome WSA (WY-030-120) is located approximately 5 miles north/northwest of the proposed pipeline. The unit has 6,316 acres of contiguous public land and offers outstanding opportunities for a primitive and unconfined type of recreation, including rock climbing, hiking, backpacking, and hunting. The opportunity for solitude exists, but it is not outstanding since the area that provides topographic and vegetative screening to the visitor is small and would be somewhat confining (BLM 1990). Lankin Dome, the most prominent feature of the unit, has long been an attraction to rock climbers (BLM 1990). The area is exceptionally scenic, with the reddish granite boulders, slabs, and exfoliating domes contrasting significantly with the greens of the wooded pockets (BLM 1990). The BLM has recommended the entire 6,316 acres of the Lankin Dome WSA for nonwilderness designation (BLM 1990).

The Split Rock WSA (WY-030-122) is located less than 0.25 mile west of the proposed pipeline. This WSA has 12,789 acres of contiguous public land with one inholding, a 40-acre parcel of private land; the private parcel was not included in the total acreage computation. The unit provides a variety of opportunities for primitive, unconfined recreation, including backpacking, hiking, and camping. For the most part, the WSA is in natural condition, free of human works. Split Rock, a historic landmark, is in the WSA, as it is part of the Oregon Trail corridor on the Sweetwater River (BLM 1990). The BLM has recommended the entire 12,789 acres of the Split Rock WSA for nonwilderness designation (BLM 1990).

The Miller Springs WSA (WY-030-123b) is located less than 0.25 mile southeast of the proposed pipeline. The WSA has 6,429 acres of public land. The unit provides outstanding opportunities for a primitive, unconfined type of recreation, including hiking, camping, rock climbing and hunting. There are opportunities to study geological and scenic attributes in this WSA. It also contains historic and archaeological sites (BLM 1990). The opportunity for solitude in this WSA is limited (BLM 1990). The BLM has recommended the entire 6,429 acres of the Miller Springs WSA for nonwilderness designation (BLM 1990).

The proposed pipeline route would be located between the Split Rock WSA and Miller Springs WSA. Three additional pipelines are located within this narrow corridor, which is depicted in Figure 3-1.

The Savage Peak WSA (WY-030-123a) is located approximately 3 miles southeast of the proposed pipeline. The 7,041-acre unit is concentrated in one block in the immediate vicinity of Savage Peak. The size of the area contributes to the feeling of solitude. This WSA offers a variety of opportunities for primitive and unconfined types of recreation, including hiking, camping, backpacking, hunting, rock climbing, nature study, and photography. Large expanses of bare granite are not found elsewhere in central Wyoming. This WSA, as well as the other three mentioned above, form a natural and highly scenic backdrop for the Sweetwater River Valley and the Oregon, California, Mormon Pioneer, and Pony Express National Historic Trail Corridors (BLM 1990). The BLM has recommended the entire 7,041 acres of the Savage Peak WSA for nonwilderness designation (BLM 1990).

The FLPMA directed the Secretary of the Interior to report his recommendations for wilderness or non-wilderness designation to the President on October 21, 1991. The President sent his recommendations to Congress in 1993. The Congress has not acted on these recommendations and is under no time limit to do so. Guidance and policies for managing these areas are provided in BLM Handbook H-8550-1, *Interim Management Policy for Lands Under Wilderness Review*. Until Congress acts on the President's recommendations, the Secretary is required to manage such lands under the *Interim Management Policy and Guidelines for Lands Under Wilderness*

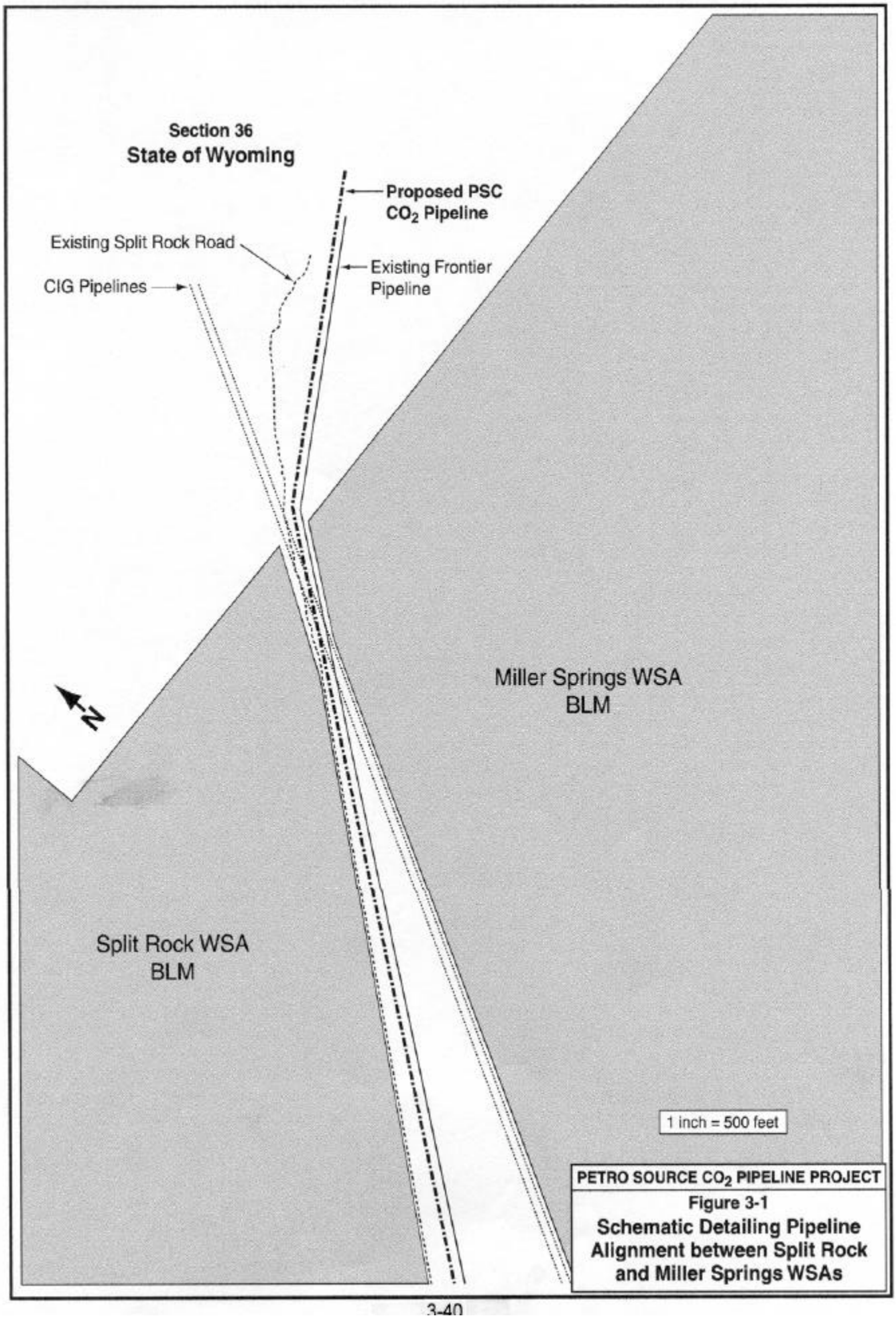


**PETRO SOURCE $CO_2$ PIPELINE PROJECT**

**Figure 3-1**

**Schematic Detailing Pipeline Alignment between Split Rock and Miller Springs WSAs**

*Review* so as not to impair their suitability for preservation of wilderness, subject to certain exceptions and conditions.

## 3.10 Visual Resources and Noise

### 3.10.1 Visual Resources

The BLM has established a visual inventory and analysis process to provide a systematic interdisciplinary approach to the management of aesthetic values on public lands. The Visual Resource Management (VRM) System (BLM 1986c) defines procedures for evaluating existing scenic quality and assigning visual resource inventory categories based on a combination of scenic values, visual sensitivity, and viewing distances from important viewpoints. Through the RMP process, the visual inventory information is evaluated along with other management considerations to assign VRM classifications to all BLM lands. Four VRM classes have been established to serve two purposes: 1) as an inventory tool portraying the relative value of visual resources; and 2) as a management tool portraying visual management objectives. Management objectives for each of the VRM classes are listed in Table 3-10.

The proposed PSC $CO_2$ Pipeline project would be developed in the Wyoming Basin physiographic province (Fenneman 1946). The Wyoming Basin is characterized by eroded, elevated plains with isolated low mountains. Vegetation is dominated by mixed shrub grasslands. Figure 3-2 illustrates four characteristic views of the study area landscape. Human modifications to the natural landscape character are sparsely scattered, most commonly back country roads with occasional clusters of ranch buildings and fences. There are few urban settlements. The study area in particular has scattered oil and gas fields connected by existing pipelines.

The proposed pipeline would cross lands assigned VRM Classes II, III, and IV. Where the pipeline would depart from BLM lands, VRM class assignments were extrapolated from surrounding VRM classes on federal land. Approximately 10 percent of the proposed 155-mile main pipeline route would be in Class II areas, 23 percent in Class III areas and the remaining 67 percent in Class IV areas (Table 3-11).

The Oregon/Mormon/Pony Express Trail crossing near MP 129 to MP 133 is managed as a VRM Class II area. The Bozeman Trail crossing near MP 253 is managed as VRM Class I area because of its unique history.

VRM Class III areas along the proposed pipeline are of two types. They either have scenic quality rated B (A is highest quality, C is lowest) or they have C-rated scenic quality and are in the

## Table 3-10
## Visual Resource Management Classes

| | |
|---|---|
| **Class I Objective:** | The objective of this class is to preserve the existing character of the landscape. This class provides for natural ecological changes; only and as such it virtually excludes human-caused changes or management activities that would cause surface disturbance. This class is typically applied to designated wilderness or other areas where the goal is to manage the area to allow natural ecological processes to occur without human interference. |
| **Class II Objective:** | The objective of this class is to retain the existing character of the landscape. The level of change to the characteristic landscape should be low. Management activities may be seen, but should not attract the attention of the casual observer. Any changes must repeat the basic elements of form, line, color, and texture found in the predominant natural features of the characteristic landscape. |
| **Class III Objective:** | The objective of this class is to partially retain the existing character of the landscape. The level of change to the characteristic landscape should be moderate. Management activities may attract attention but should not dominate the view of the casual observer. Changes should repeat the basic elements found in the predominant natural features of the characteristic landscape. |
| **Class IV Objective:** | The objective of this class is to provide for management activities which require major modification of the existing character of the landscape. The level of change to the characteristic landscape can be high. These management activities may dominate the view and be the major focus of viewer attention. However, every attempt should be made to minimize the impact of these activities through careful location, minimal disturbance, and repeating the basic elements. |
| **Rehabilitation Areas:** | Areas in need of rehabilitation from a visual standpoint should be flagged during the inventory process. The level of rehabilitation will be determined through the RMP process by assigning the VRM class approved for that particular area. |

Source: BLM 1986c.

A - Typical Terrain and Vegetation along Proposed Pipeline Main Route (MP 231.2)

B - View of Proposed Lateral Route

PETRO SOURCE $CO_2$ PIPELINE PROJECT

Figure 3-2

**Typical Views of Study Area Landscape**

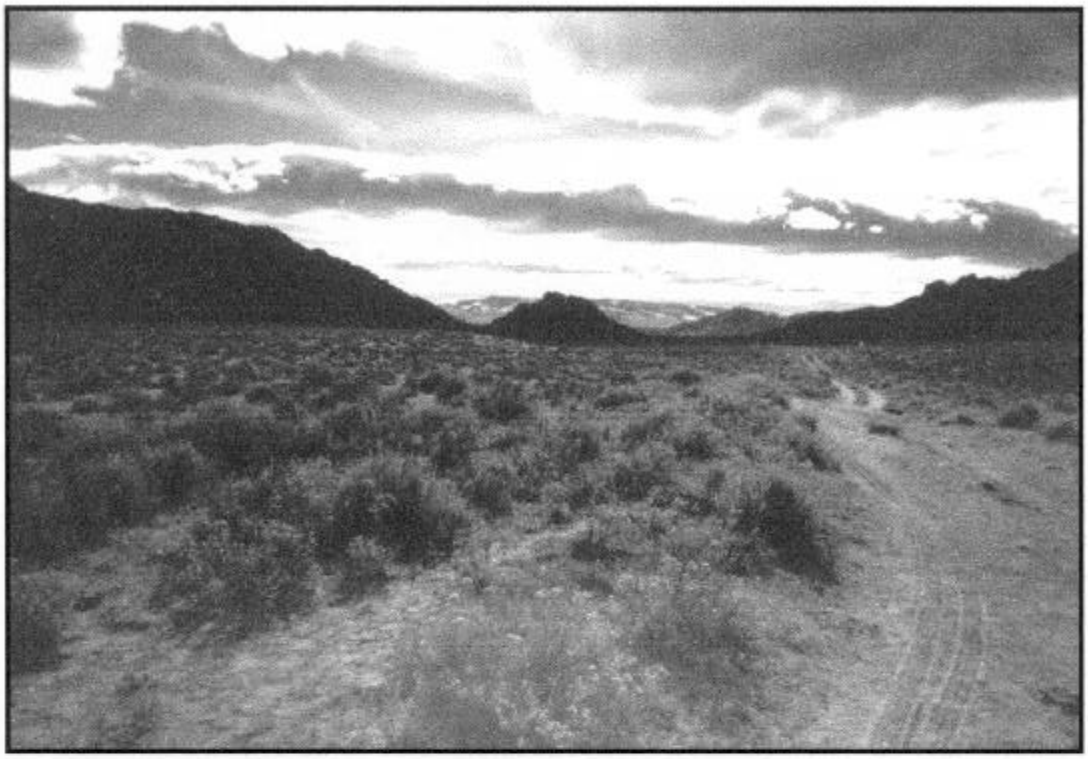

C - View of Beef Gap Area

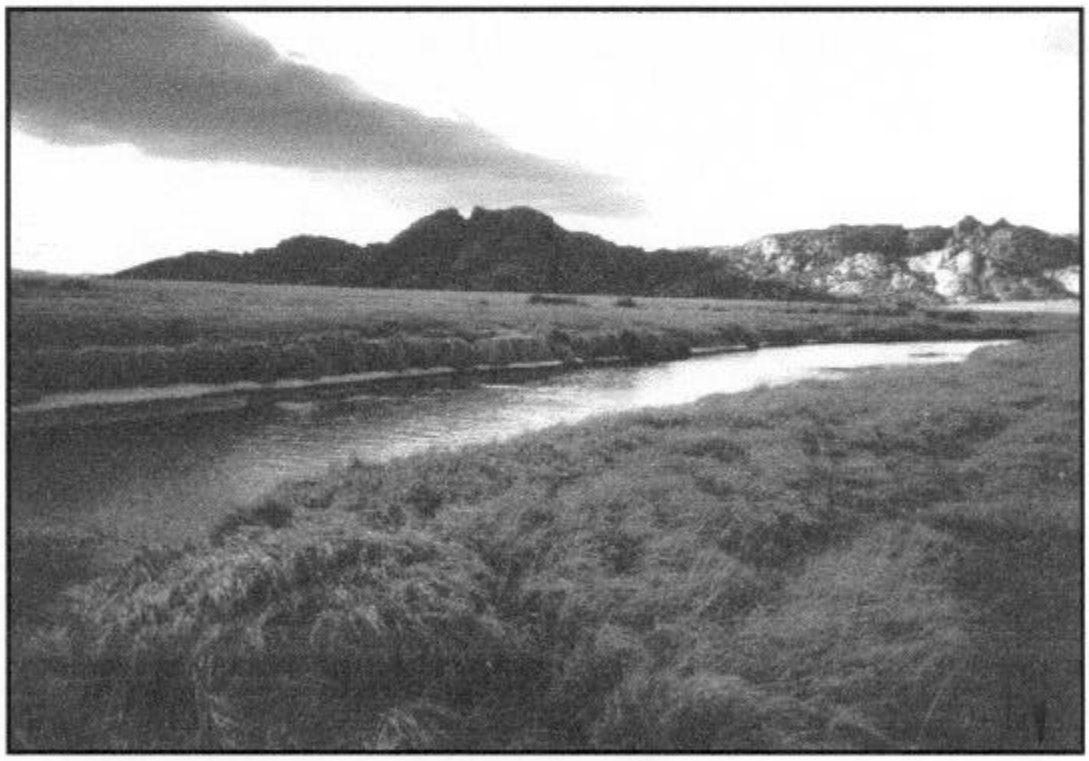

D - Sweetwater River near the Proposed Pipeline Crossing

PETRO SOURCE $CO_2$ PIPELINE PROJECT

**Figure 3-2**
**Typical Views of Study Area Landscape**

**Table 3-11**
**Visual Resource Management Class Designations**
**for the Proposed PSC $CO_2$ Pipeline Route**

| Pipeline Milepost | VRM Class | Notes |
|---|---|---|
| **Mainline Route** | | |
| 112-113 | V[1] | Crooks Gap; Western Nuclear Uranium Mine |
| 113-118 | II | Green Mountain |
| 118-120 | III | |
| 120-129 | IV | |
| 129-133 | III (I) | U.S. 287 corridor; Oregon/Mormon/Pony Express Trail managed as Class I |
| 133-143 | II | Sweetwater Rocks |
| 143-147 | III | |
| 147-159 | IV | Keester Basin |
| 159-163 | III | Rattlesnake Hills |
| 163-180 | IV | |
| 180-191 | III | U.S. 20/26 corridor |
| 191-224 | IV | Salt Creek ACEC (MP 221.5 – MP 223.5) |
| 224-234 | III | I-25/U.S. 87 |
| 234-261 | IV (I) | Bozeman Trail managed as Class I |
| 261-262 | III | Pumpkin Buttes |
| 262-267 | IV | Hartzog Draw Well Field |
| **Lateral Route** | | |
| L0 to L3 | III | Western end of lateral; the remaining 4 miles are excluded from VRM classification |

[1]The Class V designation was eliminated in the 1986 revision to the VRM system manuals. It is assumed that this would now be a Class IV area flagged for eventual rehabilitation.

Source: BLM 1984a.
BLM 1985a.
BLM 1986b.

foreground/middleground viewing range of a highly sensitive viewing area. The first type occurs mainly in the southwest, adjacent to the two Class II areas and at the Rattlesnake Hills crossing.

There also is a small segment of Class III land at the northwest edge of the Pumpkin Buttes. The second type of Class II areas applies mainly to corridors along the major highways crossing the proposed pipeline route, most notably I-25/ U.S. 87 with 1.3 million vehicle trips per year and U.S. 20/26 with 600,000 vehicle trips per year. The western portion of the lateral route also has a

C rating (approximately 3 miles). The southern 4 miles of the lateral route are excluded from VRM classification due to well field development.

The remaining two-thirds of the proposed pipeline would cross lands assigned VRM Class IV, the BLM's least restrictive visual management class. Class IV areas are either low sensitivity background or seldom seen areas, or they have C-rated scenic quality, or both. A “C” scenic VRM Class II is assigned to two segments near the southwest end of the pipeline. Quality rating doesn't necessarily mean the landscape is unattractive. It merely indicates that the particular visual character is common throughout the Wyoming Basin physiographic province. One segment, about 5 miles long, crosses the scenic western flank of Green Mountain. The second is a 10-mile strip of scenic and visually sensitive land through the Sweetwater Rocks between the Split Rock and Miller Springs WSAs. Both WSAs have Class A scenic quality ratings (BLM 1986b). A potentially important consideration in evaluating the visual effects to the proposed pipeline is steepness of slopes, especially side slopes. While terrain throughout the proposed route is irregular and sometimes steep for short distances, larger slopes with steeper than 10 percent grades occur in only a few places. Most notable of the steep sideslopes is a 4- to 5-mile segment beginning at about MP 114 where the pipeline would cross Green Mountain. Other steep segments are more remote from sensitive viewpoints, such as the Rattlesnake Ridge crossing (at MP 159 to 161) and the Pine Ridge crossing (MP 140 to 144).

### 3.10.2 Noise

The proposed PSC $CO_2$ Pipeline Project would be constructed entirely through rural areas where the nearest residences would be at least 0.5 mile from the ROW. In addition, the pipe yard work area would be located in a rural area located northwest of Casper. The closest residence to the pipe yard would be greater than 0.25 mile.

Existing noise sources in rural areas are predominantly natural (i.e., wind, birds). Areas near highways would exhibit vehicle-related noise. The BLM has estimated that the average noise level in the Casper Field Office Area is between 30 and 40 A-weighted decibels (BLM 1997). This range also is suggested in other EAs and in EISs and has been confirmed by field measurements taken elsewhere in Wyoming (Kruger 1981). The background level can be affected by atmospheric conditions, wind levels, topography, vegetation, time of day, bird, and human activity.

## 3.11 Socioeconomics

This section summarizes historical and present socioeconomic conditions in the four counties (Fremont, Natrona, Johnson, and Campbell) that would be affected by the proposed pipeline project. Elements reviewed include population, economic conditions, income, employment,

housing, local government facilities and services, and local government fiscal conditions. Tables 3-12 through 3-15 summarize baseline conditions within the four-county project area.

### 3.11.1 Population

The study area is predominantly rural and sparsely populated. Population in Fremont, Johnson, and Campbell counties has increased from 1994 to 1999. Population in Natrona County declined slightly over the same period. Since 1994, population has increased an estimated 2.7 percent in Fremont County, 5.1 percent in Johnson County, and 5.3 percent in Campbell County. Population in Natrona County has decreased 0.7 percent since 1994 (Wyoming Department of Administration and Information 2000).

### 3.11.2 Economic Conditions

The basic industries for all four counties within the project area include energy production (oil and gas), retail trade, services, and government.

In the early 1980s, Fremont County depended on uranium mining and milling as the mainstay of the local economy. When the industry collapsed in 1983, the economy of Fremont County declined steadily until the latter part of the decade. At the present time, the economy in Fremont County appears to be improving slightly with an 18 percent increase in personal income between 1994 and 1997 (Wyoming Department of Administration and Information 2000). An increase in wealthy, out-of state people also has contributed to increased incomes in Fremont and Natrona Counties.

In addition to the oil, gas, and mining economic base in Natrona County, Casper is currently considered a statewide regional trade center and has shown growth in retail sales and services in the past several years in spite of a declining population. Johnson County strongly depends upon ranching. The economy as a whole has improved recently, as evidenced by a 47 percent increase in personal income from 1994 to 1997 (Wyoming Department of Administration and Information 2000).

Campbell County depends more on coal mining than oil and gas production; coal has been somewhat of an economic stabilizing force in Campbell County. The county has experienced a 44 percent increase in personal income from 1994 to 1997 (Wyoming Department of Administration and Information 2000).

All four counties depend to some extent on the tourist industry, which is reflected in the retail trade and service sectors.

## Table 3-12
## Fremont County Economic/Demographic Profile for the Proposed PSC $CO_2$ Pipeline Project

| | 1990 | 1994 | 1995 | 1996 | 1997 | 1998 | 1999 | Percent Change 1994-1999 |
|---|---|---|---|---|---|---|---|---|
| Total Population[1] | 33,662 | 35,080 | 35,607 | 35,851 | 35,959 | 36,044 | NA | 2.7[2] |
| Percent Change/Previous Year | | 4.2 | 1.5 | 0.7 | 0.3 | 0.2 | | 2.7[2] |
| | | | | | | | | |
| Labor Force[3] | 15,745 | 17,172 | 17,545 | 17,804 | 17,273 | 17,557 | 18,210 | 6.0 |
| Percent Change/Previous Year | | 9.1 | 2.2 | 1.5 | (3.0) | 1.6 | 3.7 | |
| Employment | 14,515 | 15,831 | 16,261 | 16,425 | 15,829 | 16,174 | 16,833 | |
| Unemployment | 1,230 | 1,341 | 1,284 | 1,379 | 1,444 | 1,383 | 1,377 | |
| Unemployment Rate | 7.8 | 7.8 | 7.3 | 7.7 | 8.4 | 7.9 | 7.6 | |
| | | | | | | | | |
| Total Non-Agricultural Employment[1] | 11,700 | 12,779 | 13,042 | 13,245 | 13,200 | 13,286 | NA | 4.0[2] |
| Manufacturing | 585 | 694 | 704 | 784 | 697 | 649 | NA | (6.5)[2] |
| Mining | 468 | 397 | 422 | 391 | 504 | 457 | NA | 15.1[2] |
| Construction | 613 | 714 | 825 | 845 | 846 | 959 | NA | 34.3[2] |
| Transportation, Communications, and Public Utilities (T.C.P.U.) | 581 | 620 | 589 | 584 | 638 | 672 | NA | 8.4[2] |
| Trade | 2,710 | 2,954 | 3,087 | 3,220 | 3,192 | 3,052 | NA | 3.3[2] |
| Finance, Insurance, and Real Estate (F.I.R.E.) | 275 | 331 | 333 | 304 | 308 | 341 | NA | 3.0[2] |
| Government | 3,629 | 3,900 | 3,867 | 3,686 | 3,489 | 3,473 | NA | (10.9)[2] |
| Services | 2,732 | 3,055 | 3,096 | 3,309 | 3,387 | 3,549 | NA | 16.2[2] |
| Agriculture | 108 | 114 | 119 | 122 | 140 | 134 | NA | 17.5[2] |
| | | | | | | | | |
| Personal Income (Million $)[1] | $446.6 | $558.7 | $598.4 | $629.3 | $659.9 | NA | NA | 18.1[4] |
| Per Capita Income[1] | $13,300 | $15,927 | $16,805 | $17,554 | $18,354 | NA | NA | 15.2[4] |
| | | | | | | | | |
| 1998 County-wide Tax Rate (mills)[1] | | | | | | 76.844 | NA | |
| 1998 Total Assessed Valuation (Thousand $)[1] | | | | | | $288,983 | NA | |
| Gross Sales Tax (Thousand $)[1] | NA | $11,536 | $13,711 | $15,698 | $15,689 | $17,845 | NA | 54.7[2] |

[1]Wyoming Department of Administration and Information 2000.
[2]1994-1998.
[3]Wyoming Department of Employment 2000.
[4]1994-1997.

## Table 3-13
## Natrona County Economic/Demographic Profile for the Proposed PSC $CO_2$ Pipeline Project

| | 1990 | 1994 | 1995 | 1996 | 1997 | 1998 | 1999 | Percent Change 1994-1999 |
|---|---|---|---|---|---|---|---|---|
| Total Population[1] | 61,226 | 63,804 | 63,807 | 63,643 | 63,635 | 63,341 | NA | (0.7)[2] |
| Percent Change/Previous Year | | 4.2 | 0.0 | (0.3) | 0.0 | (0.5) | | |
| | | | | | | | | |
| Labor Force[3] | 31,896 | 32,276 | 32,752 | 32,693 | 32,387 | 33,115 | 33,571 | 4.0 |
| Percent Change/Previous Year | | 1.2 | 1.5 | (0.2) | (0.9) | 2.2 | 1.4 | |
| Employment | 29,877 | 30,137 | 30,906 | 30,611 | 30,460 | 31,328 | 33,571 | |
| Unemployment | 2,019 | 2,139 | 1,846 | 2,082 | 1,927 | 1,787 | 1,833 | |
| Unemployment Rate | 6.3 | 6.6 | 5.6 | 6.4 | 5.9 | 5.4 | 5.5 | |
| Total Non-Agricultural Employment[1] | 27,768 | 28,214 | 28,765 | 28,463 | 29,472 | 29,906 | NA | 6.0[2] |
| Manufacturing | 1,667 | 1,643 | 1,600 | 1,547 | 1,513 | 1,513 | NA | (7.9)[2] |
| Mining | 2,443 | 2,034 | 1,918 | 1,800 | 2,015 | 2,077 | NA | 2.1[2] |
| Construction | 1,739 | 1,515 | 1,682 | 1,619 | 1,751 | 1,929 | NA | 27.3[2] |
| T.C.P.U. | 1,623 | 1,615 | 1,488 | 1,440 | 1,562 | 1,649 | NA | 2.1[2] |
| Trade | 7,887 | 8,254 | 8,458 | 8,459 | 8,409 | 8,365 | NA | 1.3[2] |
| F.I.R.E. | 1,362 | 1,106 | 1,135 | 1,155 | 1,191 | 1,215 | NA | 9.9[2] |
| Government | 4,668 | 4,927 | 4,923 | 4,797 | 4,952 | 4,905 | NA | (0.4)[2] |
| Services | 6,087 | 6,835 | 7,271 | 7,354 | 7,775 | 7,964 | NA | 16.5[2] |
| Agriculture | 293 | 285 | 291 | 292 | 305 | 289 | NA | 1.4[2] |
| | | | | | | | | |
| Personal Income (Million $)[1] | $1,242.1 | $1,454.6 | $1,562.5 | $1,615.9 | $1,709.6 | NA | NA | 37.6[4] |
| Per Capita Income[1] | $20,292 | $22,798 | $24,487 | $25,390 | $26,866 | NA | NA | 17.8[4] |
| | | | | | | | | |
| 1998 County-wide Tax Rate (mills)[1] | | | | | | 72.926 | NA | |
| 1998 Total Assessed Valuation (Thousand $)[1] | | | | | | $416,733 | NA | |
| Gross Sales Tax (Thousand $)[1] | NA | $43,091 | $45,426 | $46,332 | $48,070 | $50,219 | NA | 16.5[2] |

[1]Wyoming Department of Administration and Information 2000.
[2]1994-1998.
[3]Wyoming Department of Employment 2000.
[4]1994-1997.

## Table 3-14
## Johnson County Economic/Demographic Profile for the Proposed PSC $CO_2$ Pipeline Project

| | 1990 | 1994 | 1995 | 1996 | 1997 | 1998 | 1999 | Percent Change 1994-1999 |
|---|---|---|---|---|---|---|---|---|
| Total Population[1] | 6,145 | 6,493 | 6,623 | 6,712 | 6,769 | 6,824 | NA | 5.1[2] |
| Percent Change/Previous Year | | 5.7 | 2.0 | 1.3 | 0.8 | 0.8 | | |
| | | | | | | | | |
| Labor Force[3] | 3,414 | 3,628 | 3,591 | 3,747 | 3,681 | 3,746 | 3,958 | 9.1 |
| Percent Change/Previous Year | | 6.3 | (1.0) | 4.3 | (1.8) | 1.8 | 5.7 | |
| Employment | 3,243 | 3,478 | 3,456 | 3,604 | 3,512 | 3,592 | 3,822 | |
| Unemployment | 171 | 150 | 135 | 143 | 169 | 154 | 136 | |
| Unemployment Rate | 5.0 | 4.1 | 3.8 | 3.8 | 4.6 | 4.1 | 3.4 | |
| | | | | | | | | |
| Total Non-Agricultural Employment[1] | 2,226 | 2,413 | 2,369 | 2,484 | 2,513 | 2,511 | NA | 4.1[2] |
| Manufacturing | 66 | 119 | 74 | 99 | 122 | 105 | NA | (11.8)[2] |
| Mining | 161 | 130 | 105 | 111 | 123 | 101 | NA | (22.3)[2] |
| Construction | 85 | 131 | 127 | 127 | 140 | 160 | NA | 22.1[2] |
| T.C.P.U. | 225 | 95 | 92 | 96 | 97 | 82 | NA | (13.7)[2] |
| Trade | 607 | 635 | 649 | 677 | 695 | 696 | NA | 9.6[2] |
| F.I.R.E. | 87 | 102 | 103 | 107 | 110 | 119 | NA | 16.7[2] |
| Government | 701 | 726 | 722 | 715 | 728 | 740 | NA | 1.9[2] |
| Services | 272 | 418 | 433 | 495 | 446 | 471 | NA | 12.7[2] |
| Agriculture | 23 | 56 | 64 | 56 | 52 | 39 | NA | (30.4)[2] |
| | | | | | | | | |
| Personal Income (Million $)[1] | $101.3 | $129.5 | $129.8 | $139.8 | $148.5 | NA | NA | 46.6[4] |
| Per Capita Income[1] | $16,419 | $19,945 | $19,600 | $20,827 | $21,932 | NA | NA | 12.2[4] |
| | | | | | | | | |
| 1998 County-wide Tax Rate (mills) | | | | | | 67.009 | NA | |
| 1998 Total Assessed Valuation (Thousand $) | | | | | | $79,674 | NA | |
| Gross Sales Tax (Thousand $) | NA | $2,619 | $2,795 | $2,972 | $3,558 | $4,118 | NA | 57.3[2] |

[1]Wyoming Department of Administration and Information 2000.
[2]1994-1998.
[3]Wyoming Department of Employment 2000.
[4]1994-1997.

## Table 3-15
## Campbell County Economic/Demographic Profile for the Proposed PSC $CO_2$ Pipeline Project

| | 1990 | 1994 | 1995 | 1996 | 1997 | 1998 | 1999 | Percent Change 1994-1999 |
|---|---|---|---|---|---|---|---|---|
| Total Population[1] | 29,370 | 30,824 | 31,442 | 31,931 | 32,071 | 32,465 | NA | 5.3[2] |
| Percent Change/Previous Year | | 5.0 | 2.0 | 1.6 | 0.4 | 1.2 | | |
| | | | | | | | | |
| Labor Force[3] | 16,402 | 18,139 | 18,362 | 18,571 | 18,535 | 19,161 | 19,770 | 9.0 |
| Percent Change/Previous Year | | 10.6 | 1.2 | 1.1 | (0.2) | 3.4 | 3.2 | |
| Employment | 15,562 | 17,246 | 17,500 | 17,695 | 17,556 | 18,235 | 18,753 | |
| Unemployment | 840 | 893 | 862 | 876 | 979 | 926 | 1,017 | |
| Unemployment Rate | 5.1 | 4.9 | 4.7 | 4.7 | 5.3 | 4.8 | 5.1 | |
| | | | | | | | | |
| Total Non-Agricultural Employment[1] | 14,072 | 15,640 | 15,736 | 15,988 | 16,353 | 16,810 | NA | 7.5[2] |
| Manufacturing | 136 | 377 | 376 | 409 | 416 | 487 | NA | 29.2[2] |
| Mining | 4,387 | 4,421 | 4,075 | 4,087 | 4,133 | 4,236 | NA | (4.2)[2] |
| Construction | 730 | 1,051 | 1,324 | 1,403 | 1,583 | 1,491 | NA | 41.9[2] |
| T.C.P.U. | 672 | 692 | 742 | 742 | 762 | 785 | NA | 13.4[2] |
| Trade | 2,924 | 3,327 | 3,392 | 3,481 | 3,565 | 3,546 | NA | 6.6[2] |
| F.I.R.E. | 329 | 395 | 407 | 399 | 375 | 368 | NA | (6.8)[2] |
| Government | 2,754 | 2,962 | 2,989 | 3,026 | 3,037 | 3,101 | NA | 4.7[2] |
| Services | 2,092 | 2,324 | 2,338 | 2,360 | 2,391 | 2,683 | NA | 15.4[2] |
| Agriculture | 49 | 91 | 93 | 84 | 92 | 113 | NA | 24.2[2] |
| | | | | | | | | |
| Personal Income (Million $)[1] | $513.3 | $630.1 | $664.9 | $699.8 | $740.2 | NA | NA | 44.2[4] |
| Per Capita Income[1] | $17,456 | $20,442 | $21,162 | $21,915 | $23,079 | NA | NA | 12.9[4] |
| | | | | | | | | |
| 1998 County-wide Tax Rate (mills)[1] | | | | | | 60.419 | NA | |
| 1998 Total Assessed Valuation (Thousand $)[1] | | | | | | $1,495,260 | NA | |
| Gross Sales Tax (Thousand $)[1] | NA | $24,111 | $26,021 | $26,748 | $32,301 | $39,909 | NA | 65.5[2] |

[1]Wyoming Department of Administration and Information 2000.
[2]1994-1998.
[3]Wyoming Department of Employment 2000.
[4]1994-1997.

### 3.11.3 Income

Tables 3-12 through 3-15 show estimated personal and per capita income for each of the four counties in the project area. All four counties showed increases in county-wide personal income from 1994 to 1997. Average weekly wages in the mining and construction sectors are shown in Table 3-16. Wage rates have fluctuated through the years, particularly in the construction sector, but have generally increased through the period. Energy production is considered the highest paying sector for wage and salary employment.

**Table 3-16**
**Average Weekly Wage for the Proposed PSC $CO_2$ Pipeline Project**

| County and Sector | (dollars) | | | | | |
|---|---|---|---|---|---|---|
| | 1993 | 1994 | 1995 | 1996 | 1997 | 1998 |
| Fremont | | | | | | |
| Construction | 388 | 397 | 410 | 396 | 427 | 452 |
| Mining | 611 | 667 | 684 | 687 | 726 | 831 |
| Natrona | | | | | | |
| Construction | 447 | 446 | 454 | 465 | 502 | 546 |
| Mining | 688 | 692 | 688 | 707 | 773 | 750 |
| Johnson | | | | | | |
| Construction | 291 | 333 | 367 | 334 | 341 | 367 |
| Mining | 606 | 660 | 727 | 728 | 677 | 678 |
| Campbell | | | | | | |
| Construction | 469 | 443 | 477 | 499 | 532 | 559 |
| Mining | 887 | 889 | 931 | 973 | 1,014 | 1,032 |

Source: Wyoming Department of Employment (2000).

### 3.11.4 Employment

Total employment throughout the area has increased from 1994 through 1998. As shown in Tables 3-12 through 3-15, total non-agricultural employment has increased by 4.0 percent in Fremont County; 6.0 percent in Natrona County; 4.1 percent in Johnson County, and 7.5 percent in Campbell County from 1994 to 1998. Employment in the construction sector showed the greatest increase in all counties. Employment in other industries fluctuated during the period, with decreases in the manufacturing sector in all counties except Campbell County, and increases in the trade sector in all four counties.

Unemployment rates in the four counties fluctuated during the period from 1994 to 1999, with a generally declining trend, with the exception of Campbell County, which showed a slight increase.

### 3.11.5 Housing

Housing availability throughout the area is adequate for the existing population. Towns and municipalities in close proximity to the proposed pipeline route include Casper, Lander, Rawlins, Jeffrey City, Edgerton, Powder River, and Kaycee. Casper is the largest municipality and is centrally located to the project. Given the short duration of the construction period, it is expected that the majority of workers locating from outside the area would use temporary accommodations in campgrounds/RV parks and hotels/motels. In Jeffrey City, a former support community for the Western Nuclear Split Rock Mill Site, approximately 20 three-bedroom apartment units are vacant and available to accommodate a temporary work force. Approximately 20 trailer lots with water and sewer hookups also are available in Jeffrey City (Richmond 1999).

Table 3-17 shows temporary housing available in close proximity to the proposed pipeline route. Hotels/motels and campgrounds with RV sites are available in all study area communities. Communities with larger populations, such as Casper, have more accommodations available.

**Table 3-17**
**Temporary Housing Accommodations for the Proposed PSC $CO_2$ Pipeline Project**

| Type/Location of Accommodation | Number of Locations | Number of Units | Number of Tent Sites | Number of Trailer Sites | Dates Available |
|---|---|---|---|---|---|
| Hotel/Motel, Casper | 24 | 1,891 | | | |
| Hotel/Motel, Rawlins | 7 | 575 | | | |
| Hotel/Motel, Buffalo | 15 | 415 | | | |
| Hotel/Motel, Edgerton-Midwest | 1 | 20 | | | |
| Hotel/Motel, Powder River | 1 | 18 | | | |
| Hotel/Motel, Kaycee | 3 | 50 | | | |
| Hotel/Motel, Gillette | 14 | 1,129 | | | |
| Hotel/Motel, Lander | 11 | 259 | | | |
| Hotel/Motel, Jeffrey City | 1 | 18 | | | |
| Campground, Casper | 9 (7 private, 2 BLM) | | 40+ | 270+ | 3 year-round<br>6 seasonal |
| Campground, Jeffrey City | 2 (1 private, 1 BLM) | | 20+ | 16+ | Seasonal |
| Campground, Powder River | 1 (private) | | 20 | 20 | Seasonal |
| Campground, Rawlins | 4 (private) | | 41+ | 391 | Seasonal |
| Campground, Kaycee | 4 (3 private, 1 City Park) | | Available | 38+ | 3 year-round<br>1 seasonal |
| Campground, Buffalo | 5 (private) | | 110 | 289 | 2 year-round<br>3 seasonal |
| Campground, Lander | 17 (6 private, 2 BLM, 6 USFS, 1 City Park) | | 126+ | 231+ | 2 year-round<br>15 seasonal |

Source: Wyoming Travel and Tourism. (2000).

Similarly, demand for these accommodations also may be greater in these communities, particularly during peak tourist seasons such as during the summer months and during hunting seasons.

The average monthly rent for a two-bedroom apartment in Natrona County is $340. A two to three-bedroom single family home rents for $480 per month on average, and a mobile home rents for $385 per month on average (Wyoming Department of Administration and Information 2000).

### 3.11.6 Local Government Facilities and Services

Fremont, Natrona, Johnson, and Campbell county governments all provide a wide array of governmental services including general county government, law enforcement, fire protection, road and bridge infrastructure, solid waste disposal, medical and ambulance, and education. Most public facilities and services, particularly the infrastructure, adequately serve the existing population and could support future growth.

### 3.11.7 Local Fiscal Conditions

As shown in Tables 3-12 through 3-15, gross sales tax receipts have increased in all four study area counties during the period 1994-1999. Properties assessed by the State, including pipelines, are assessed at, and taxed on, 11.5 percent of value (Wyoming Department of Revenue 1998a). Property taxes are a primary source of county and school district revenue, and tax revenues are allocated to county funds, school districts, special districts, and municipalities.

## 3.12 Environmental Justice

Since publication of Executive Order (EO) 12898, Federal Action to Address Environmental Justice in Minority Populations and Low-Income Populations in the Federal Register (FR) on February 11, 1994 (59 FR 7629), federal agencies have been developing a strategy for implementing the order. Currently, the federal agencies rely on the Environmental Justice Guidance Under the NEPA prepared by the CEQ (the guidance) (USEPA1997), in implementing EO 12898 in preparing NEPA documents.

Pursuant to EO 12898 on Environmental Justice, federal agencies shall make the achievement of environmental justice part of their mission by identifying and addressing, as appropriate, disproportionately high and adverse human health or environmental effects of their programs, policies, and activities on minority populations, low-income populations, and Indian tribes, and allowing all portions of the population an opportunity to participate in the development of, compliance with, and enforcement of federal laws, regulations, and policies affecting human

health or the environment regardless of race, color, national origin, or income. EO 12898 requires identifying whether an area potentially affected by a proposed federal action may include minority populations and low-income populations and seek input accordingly.

### 3.12.1 Minority Populations

Minorities include individuals who are members of the following population groups: American Indian or Alaskan Native; Asian or Pacific Islander; African American, not of Hispanic origin; or Hispanic. As directed by EO 12898, agencies should consider the composition of the affected area, to determine whether minority populations are present in the area affected by the proposed action. The guidance states that "a minority population may be present if the minority population percentage of the affected area is 'meaningfully greater' than the minority population percentage in the general population or other 'appropriate unit of geographic analysis' (USEPA 1997)." For the purpose of this EA analysis, the "affected area" is defined as any community located within five miles of the proposed PSC pipeline ROW.

The proposed PSC pipeline would pass through a sparsely populated area dotted with numerous oil well fields and sprawling cattle ranches. The nearest communities that could be affected by the project are Powder River, Edgerton, and Midwest. All three of these communities are located in Natrona County. Powder River is located approximately three miles west of the project area, Edgerton and Midwest are southwest by approximately 4 miles and 2 miles, respectively. The U.S. Census Bureau estimated the July 1999 population of Edgerton at 255 and Midwest at 473 (Census 1999). Population estimates for Powder River were not available.

Minority population percentages were not available through the U.S. Census Bureau for geographic units below the county level. Therefore, minority population percentages for Natrona County were used in this analysis. According to the 1990 U.S. Census Bureau statistics (at this time, the census data on minority populations has not been updated since 1990), the population of Natrona County was primarily white (approximately 97.0 percent), with the largest minority population as "other race" (approximately 1.2 percent), followed by Black (approximately .008 percent), American Indian (approximately .007 percent) and Asian or Pacific Islander (approximately .005 percent) (Census 1990). It is assumed that the minority populations living in Natrona County have not changed significantly over the past decade and that the 1990 percentages are similar to the current minority population percentages. It also is assumed that the minority population percentages for Powder River, Edgerton, and Midwest are similar to Natrona County.

### 3.12.2 Low-Income Populations

The guidance recommends that low-income populations in an affected area be identified using the annual statistical poverty thresholds from the Bureau of Census' Current Population Reports, Series P-60 on Income and Poverty. In identifying low-income populations, agencies may consider as a community either a group of individuals living in geographic proximity to one another, or a set of individuals (such as migrant workers or Native Americans), where either type of group experiences common conditions of environmental exposure. For the purpose of this EA analysis, the "affected area" is defined as any community within five miles of the proposed PSC pipeline ROW.

As stated previously, the proposed PSC pipeline would pass through a rural and sparsely populated area. The proposed route would not pass through or be adjacent to any communities; however, the towns of Powder River, Edgerton, and Midwest are located within five miles of the proposed PSC pipeline ROW or in what has been defined as the "affected area." Median household income estimates were not available for geographic units below the county level. Income estimates were available for Natrona County; however, the data has not been updated since 1997. According to the 1997 U.S. Census Bureau estimates, the median household income for Natrona County was $34,685 (Census 1997). It is assumed that the median household income for Natrona County has not changed significantly over the past 3 years and that the 1997 figure is similar to the current median household income. It also is assumed that the median household income for the towns of Powder River, Edgerton, and Midwest are similar to Natrona County.

The guidance recommends that low-income populations in an affected area be identified using the annual statistical poverty thresholds from the Bureau of Census' Current Population Reports, Series P-60 on Income and Poverty. Since the median household income for Natrona County is based on 1997 data, the 1997 poverty threshold was used for this analysis. The poverty threshold was based on a 3-person household. The U.S. Census Bureau 1997 poverty threshold definition for a 3-person household was $12,802 (Census 1997). The 1997 median household income for Natrona County ($34,685) indicates a general level of income for the county that was well above the poverty threshold.

## 3.13 Transportation

Three major federal highways and one state highway would be crossed by the proposed pipeline route; no highways would be crossed by the lateral route. I-25 would be crossed at approximately MP 228, which connects south to Casper, Cheyenne, and Denver and North to Sheridan and Billings, Montana. I-25 is a four-lane, divided highway developed to Interstate Systems standards. U.S. 20/26 would be crossed approximately 41 miles southwest of the route at MP 187. U.S.

20/26 connects west to Shoshoni, Riverton, or Thermopolis and east to Casper. U.S. 20/26 is a paved, two-lane, primary highway. U.S. 287 runs northwest to Lander and southeast to Rawlins where it intersects to I-80. U.S. 287 also is a paved, two-lane, primary highway. The only state highway that would be crossed by the proposed route is WY 192. WY 192 is a paved, two-lane, secondary highway connecting Kaycee at I-25 with WY 387 northeast of Edgerton. Table 3-18 lists traffic levels on the major highways.

Areas between the major highways are served by an irregular, complex network of unpaved roads ranging from unmaintained 4-wheel-drive trails to gravel-surfaced county roads. In certain energy development areas, the networks are fairly dense, having been constructed for resource development purposes. Notable access points include Dry Creek Road (MP 151), Poison Spider Road (MP 169), Powder River Road (MP 181), North Natrona Road (MP 191), Thirty-three Mile Road (MP 206), and Smoky Gap Road (MP 223).

**Table 3-18**
**Traffic Levels for Major Highways Crossed by the Proposed PSC $CO_2$ Pipeline, 1998**

| | | 1998 Traffic Counts | | | |
|---|---|---|---|---|---|
| | | AADT[1] | | Total Annual[2] | |
| Highway | Location | Total Traffic | Trucks | Total Traffic | Trucks |
| U.S. 287 | East of Jeffrey City (MP 22-23) | 940 | 120 | 343,100 | 43,800 |
| U.S. 20/26 | Between Powder River and Natrona (MP 30-38) | 2,340 | 400 | 854,100 | 146,000 |
| I-25 | near Exit 227 (MP 223-227) | 2,830 | 730 | 1,032,950 | 266,450 |
| WY 192 | near Linch (MP 30-35) | 180 | 40 | 65,700 | 14,600 |

[1]Annual Average Daily Traffic.
[2]Extrapolated from AADT.

Source: Wyoming Department of Transportation.

The pipeline route has rail service via Burlington Northern through Casper or Gillette and via Union Pacific through Rawlins approximately 50 miles to the south.

## 3.14 Cultural Resources/Native American

### 3.14.1 Cultural Resources

A Class I cultural resources inventory (literature search) was conducted in 1985 by personnel from Larson-Tibesar Associates (LTA) through the Wyoming Recreation Commission (State Historic Preservation Office, Records Division, Laramie) as part of the Draft Bairoil/Dakota Carbon Dioxide Projects EIS (BLM 1985a). Additionally, the BLM General Land Office Plats were reviewed in order to compile a list of potential historic sites, including historic trail crossings in and near the proposed pipeline route. The literature search identified previous cultural resource inventories adjacent to the proposed pipeline route conducted by Commonwealth Associates (Commonwealth 1983), Powers Elevation Corporation (Brechtel et al. 1984), and P-III Associates (Coulam n.d.).

The National Historic Preservation Act (NHPA) requires that all significant cultural resources be identified and considered prior to development and ensures that prehistoric and historic sites important to our national heritage are not inadvertently damaged or destroyed by federally initiated or authorized actions. In compliance with regulations established in the 1966 NHPA, (36 CFR Part 800), an intensive Class III cultural resources inventory (pedestrian survey) and test excavations were conducted by LTA from June to October 1985 on portions of the pipeline not previously surveyed (Hilman et al. 1987). The pedestrian survey included the pipeline ROW from Bairoil to the Wyoming border. Cultural resources located in the survey area were reviewed to determine if any would be subject to impacts that could affect their eligibility based on National Register of Historic Places (NRHP) criteria for evaluation (36 CFR 60.4 [a-d]).

The intensive pedestrian survey covered a corridor width of 150 and 200 feet for the pipeline and 100 feet for the potential access roads. For the proposed pipeline, a 150-foot-wide corridor was inventoried where the proposed $CO_2$ line would parallel an existing pipeline. A 200-foot-wide corridor was inventoried where the line would not parallel any existing pipeline.

A total of 138 sites were recorded by LTA as a result of the pedestrian survey. These include 3 historic trails, 11 other historic sites, 113 prehistoric sites, and 11 sites with both prehistoric and historic components. The prehistoric sites include lithic scatters, seasonal camps, house pits, and stone circles. Historic sites documented during the survey include the abandoned Chicago & NW railroad bed, Merino Station and railroad grade, trash scatters, and historic homesteads. Five crossings of three historic trails were located, three of the Oregon/Mormon/Pony Express Trail and one each for the Bridger and Bozeman Trails. Of the 138 documented sites, 34 are recommended as eligible for nomination to the NRHP. Test excavations were conducted at 22 of the prehistoric sites in order to determine the presence of buried cultural deposits and assess

potential impacts to the sites. Testing consisted of shovel tests, formal excavation units, and backhoe trenching.

In 1990, archaeological investigations were conducted by Archaeological Services of Western Wyoming College (AS-WWC) along the proposed Wyoming-Dakota $CO_2$ Pipeline, Segment 2 (Bower et al. 1991). The AS-WWC investigations were a continuation of cultural resource studies initiated in 1985 by LTA. The purpose of the 1990 investigations was to complete all outstanding inventory and site evaluation requirements and identify mitigation needs, i.e, complete the cultural resource requirements for obtaining ROW approval.

AS-WWC investigations included revisiting 48 sites that were recorded by LTA in 1985, an additional Class III inventory, and test excavations. These investigations resulted in the discovery of four previously unrecorded prehistoric sites and six isolated finds, and the re-recording of six previously discovered sites. Of the ten sites recorded by AS-WWC, sites 48NA728 and 48FR1499 were recommended as eligible to the NRHP with SHPO concurrence (Marceau 1991a). In addition, five historic trail crossings were documented; three of the Oregon/Mormon/Pony Express Trail and one each for the Bridger and Bozeman Trails (Table 3-19).

**Table 3-19**
**Historic Trails Eligible to the NRHP Documented Along the Proposed PSC $CO_2$ Pipeline Route**

| Site No. | Name | Mile Post | Legal Location | NRHP | Condition |
|---|---|---|---|---|---|
| 48FR736 | Oregon/Mormon/ Pony Express | 132.0 | Section 21, T29N, R89W | Eligible | Ruts not intact, two-track trail |
| | | 132.2 | Section 20, T29N, R89W | Eligible | Ruts not intact, two-track trail |
| | | 132.3 | Section 29, T29N, R89W | Eligible | Ruts not intact, two-track trail |
| 48NA207 | Bridger Trail | 175.4 | Section 14, T34N, R85W | Eligible | Ruts not intact, two-track trail |
| 48JO134 | Bozeman Trail | 253.0 | Section 29, T44N, R77W | Eligible | Ruts not intact, two-track trail |

[1]BLM (1985a) lists several additional trails purported to be in the study area. These could not be located or confirmed during the inventory.

Where the proposed pipeline paralleled an existing pipeline, a 150-foot-wide corridor was surveyed. A 200-foot-wide corridor was surveyed where a portion of the existing pipeline ran parallel to the Sweetwater Ranch Road. A 100-foot-wide corridor was surveyed for proposed access roads.

LTA and AS-WWC's inventories identified a total of 137 sites within the currently proposed pipeline ROW and access road survey corridor; 29 of these are recommended as eligible to the NRHP (Table 3-20). As a result of these inventories and test excavations, data recovery was

**Table 3-20**
**NRHP - Eligible Sites Located During the Class III Pedestrian Survey**

| Site Number | Site Type | Project Element |
|---|---|---|
| **Lander Field Office** | | |
| 48FR736 | Oregon/Mormon/Pony Express Trail | Pipeline |
| 48FR1475 | Open camp | Pipeline |
| 48FR1499 | Open camp | Pipeline |
| 48NA257 | Open camp/lithic procurement | Pipeline |
| 48NA359 | Lithic scatter/stone circle | Pipeline |
| 48NA728 | Open camp | Pipeline |
| 48NA884 | Open camp | Pipeline |
| 48NA1060 | Open camp | Pipeline |
| 48NA4067 | Open camp/stone circles | Pipeline |
| **Casper Field Office** | | |
| 48NA207 | Bridger Trail | Pipeline |
| 48NA226 | Stone circles/open camp | Pipeline |
| 48NA242 | North-south railroad grade | Pipeline |
| 48NA1019 | Lithic scatter/historic trash scatter | Pipeline |
| 48NA1061 | Stone feature, open camp | Pipeline |
| 48NA1079 | Open camp | Pipeline |
| 48NA1080 | Open camp | Pipeline |
| 48NA1083 | Open camp | Pipeline |
| 48NA1086 | Open camp | Pipeline |
| 48NA1090 | Morton Ranch historic site | Pipeline |
| **Buffalo Field Office** | | |
| 48CA2195 | Open camp | Pipeline |
| 48JO134 | Bozeman Trail | Pipeline |
| 48JO946 | Open camp | Pipeline |
| 48JO947 | Open Camp | Pipeline |
| 48JO950 | Lithic Scatter | Pipeline |
| 48JO954 | Open camp | Pipeline |
| 48JO938 | Open camp/historic trash | Pipeline |
| 48JO958 | Open camp | Pipeline |
| 48JO959 | Open camp | Pipeline |
| 48JO963 | Open camp | Pipeline |

Source: Bower et al. (1991).

recommended for three prehistoric sites (48NA1079, 48NA1086, 48CA2195) to mitigate possible adverse effects from construction activities. Site 48NA1079 contained a house pit dated to ca. 5200 BP (before present), which was overlain by a second component dated to ca. 4150 BP. Site 48NA1086 produced two stratified residential components dating to ca. 3300 and 1700 BP, respectively. Site 48NA2195 is a single component residential site dated to ca. 1200 BP (Darlington et al. 1995). Features, chipped stone tools, faunal remains, and floral remains were recorded during the excavations. All three sites were recommended as eligible to the NRHP, based on the documented presence of in situ subsurface cultural components. The data recovery work at the three sites served to mitigate adverse effects associated with the construction of the proposed pipeline.

Site 48NA1060 is an NRHP-eligible prehistoric open camp that was recorded and tested by LTA in 1985 and later by AS-WWC in 1990. The artifacts located on the surface of the site include lithic debitage, lithic tools, groundstone, and burned stone. Test excavations, shovel tests, and backhoe trenches revealed the presence of subsurface features and artifacts in the proposed pipeline ROW, but no intact cultural deposits were found. At that time, data recovery was not recommended for the site based on evidence indicating that the site had been disturbed by natural processes and that intact cultural deposits associated with the features were not present.

The Wyoming SHPO reviewed the site evaluations, mitigation procedures, and data recovery plan submitted by AS-WWC following the 1990 cultural resources investigations. Following the review, the SHPO issued a letter on August 22, 1991 stating that they agree with AS-WWC's determination that there would be no adverse effects to historic properties if the mitigation procedures and data recovery plan were carried out (Marceau 1991b). On January 11, 1994, the BLM received a letter from the Advisory Council on Historic Preservation stating that they concur with the results of the archaeological investigations conducted for the proposed Wyoming-Dakota $CO_2$ Pipeline, Segment 2, and that all pre-construction requirements have been met (Nissley 1994).

During June 2000, a literature search and records review at the Wyoming State Historic Preservation Office, Records Division, was conducted by Western Archaeological Services (WAS) for the proposed 7-mile lateral pipeline. The review covered a 1-mile-wide corridor either side of the pipeline centerline. Several cultural resources investigations have been documented in the project area. These include Class III inventories for buried communication cables, $CO_2$ pipelines, highways, well pads, access roads, and historic inventories of the Salt Creek Oil Field. Six sites, five prehistoric and one historic, are recorded within the proposed project area; however, none of these sites are located within the proposed pipeline ROW. Because of their location outside of the proposed pipeline ROW, the six previously recorded sites would not be impacted by the proposed 7-mile lateral pipeline.

In addition to the six sites mentioned above, the Bozeman Trail (48JO1599) also was identified in the literature search for the proposed 7-mile lateral pipeline. However, the legal description and county location were inconsistent, indicating an error in the record. As a result of consultation between WAS and the BLM it was determined that an alternate of the Bozeman Trail trends north through the town of Midwest, over 1 mile east of the proposed pipeline route. Based on this information, the record appears to be in error, and the Bozeman Trail is not located within the project area. WAS notified the Records Division of the error.

In June 2000, WAS conducted a cultural resources pedestrian survey of the proposed 7-mile lateral pipeline. The survey corridor measured 50 feet either side of the pipeline centerline. No cultural resources were located during the survey. WAS has recommended cultural clearance for the proposed 7-mile Petro Source $CO_2$ lateral pipeline.

A PA between the BLM and Wyoming SHPO has been signed. A copy of the PA is provided in Appendix A. The PA outlines cultural survey protocol to be followed, report and treatment plan requirements, and procedures for mitigating potential impacts to identified and unidentified cultural resources. Petro Source has agreed to all stipulations identified in the PA and has incorporated them into their environmental protection measures (Section 2.5.8). Protection measures identified in the PA include construction monitoring during topsoil stripping and ROW preparation where the ROW crosses site 48NA1060, open trench inspection (OTI) for evidence of buried cultural deposits, and treatment of human remains.

### 3.14.2 Native American Consultation

Native American (traditional) religious and cultural concerns include archaeological sites and areas and materials important to Native Americans for religious and/or traditional use. Sensitive resources could include prehistoric sites, features and artifacts, contemporary sacred areas, burial sites, traditional use areas, and sources for materials used in the production of sacred objects and traditional tools. Traditional Cultural Properties are eligible for inclusion in the NRHP because of their association with cultural practices or beliefs of a living community that are rooted in the community's history and are important in maintaining that community's cultural identity.

It is the responsibility of all federal agencies to comply with the requirements of Section 106 and the Advisory Council's regulations when planning and carrying out their undertakings. In doing so, they are required to consult with Native American groups or other interested parties depending on the specifics of the undertaking. Such consultation with Native American groups or other interested parties is central to the Section 106 process. Consultation is defined in the Council's regulations as: The process of seeking, discussing, and considering the views of other

participants, and, where feasible, seeking agreement with them regarding matters arising in the Section 106 process [36 CFR § 800.16(f)].

As part of the Section 106 compliance process, a certified/registered letter has been sent to all federally recognized Native American groups and other interested parties either residing in or with cultural ties to the proposed project area. The letter informs these parties of the proposed undertaking and solicits their concern/comments regarding possible historical and traditional ties to the area or the presence of religious or spiritual sites. A total of six applicable Native American groups were contacted: Eastern Shoshone, Northern Arapahoe, Southern Cheyenne, Northern Cheyenne Crow, and Oglala Souix. Any specific information provided by Tribal members concerning Native American traditional use and/or spiritual sites in or near the project area would remain confidential.

# 4.0 ENVIRONMENTAL CONSEQUENCES

Chapter 4.0 of this EA provides an analysis of the potential environmental impacts that could result from implementation of the Proposed Action and No Action alternative. Narrative descriptions of potential impacts under the Proposed Action are provided for each environmental resource in Sections 4.1 through 4.15. The impacts of the No Action Alternative are discussed in Section 4.15. No other alternatives were analyzed for this EA. The impact discussions reflect the implementation of the project-committed protection measures, as listed in Section 2.5.

## 4.1 Air Quality

National Ambient Air Quality Standards and Wyoming Ambient Air Quality Standards are presented in Table 4-1. Concentrations of these pollutants in the ambient air may not exceed these levels. In addition, the emissions from the project and construction activities may not cause or contribute to an exceedence of these levels.

Pipeline construction activities would result in short-term emissions for the operation of construction vehicles, the generation of fugitive dust, and the approved burning of debris. Assuming an average daily construction rate of up to 4 miles and using construction emission factors from the California Environmental Quality Act, Air Quality Handbook (South Coast Air Quality Management District 1993), the daily exhaust emission levels for pipeline construction were estimated (Table 4-2).

**Table 4-1**
**Applicable Ambient Air Quality Standards for the Proposed PSC $CO_2$ Pipeline Project**

| Pollutant[1] | Averaging Period | Wyoming Standard ($\mu g/m^3$) | National Standard ($\mu g/m^3$) |
|---|---|---|---|
| TSP | 24-hour | 150 | No standard |
| $PM_{10}$ | 24-hour | 150 | 150 |
| | Annual | 50 | 50 |
| $NO_2$ | Annual | 100 | 100 |
| $O_3$ | 1-hour | 160 | 235 |
| $SO_2$ | 3-hour | 1,300 | 1,300 |
| | 24-hour | 260 | 365 |
| | Annual | 60 | 80 |

[1] TSP = Total suspended particulates
$PM_{10}$ = Particulates smaller than 10 micrometers aerodynamic diameter.
$NO_2$ = Nitrogen dioxide
$O_3$ = Ozone
$SO_2$ = Sulfur dioxide

**Table 4-2**
**Construction Emissions Estimates for the Proposed PSC $CO_2$ Pipeline Project**

| Source | CO | | VOC | | $NO_x$ | | $SO_2$ | | $PM_{10}$ | |
|---|---|---|---|---|---|---|---|---|---|---|
| | lbs./ day | total tons | lbs./ day | total tons | lbs./ day | total tons | lbs./ day | total tons | lbs./ day | total tons |
| Construction Equipment Operations | 552.4 | 22.4 | 107.9 | 4.4 | 1,102.5 | 44.7 | 95.5 | 3.9 | 93.3 | 3.8 |
| Vehicular Operations | 27.2 | 1.1 | 4.5 | 0.2 | 31.9 | 1.3 | 0.3 | 0.01 | 2.6 | 0.1 |
| Construction Fugitive Dust | - | - | - | - | - | - | - | - | 1,430.7 | 57.9 |
| Wind Erosion Dust | - | - | - | - | - | - | - | - | 1,533.3 | 62.1 |
| **Total Construction Emissions** | **579.6** | **23.5** | **112.5** | **4.6** | **1,134.4** | **45.9** | **95.8** | **3.9** | **3,059.9** | **123.9** |

Assumptions: Types and quantity of equipment are shown in Table 2-4. Total time for pipe laying would be approximately 81 days. Operation time of construction equipment would be 12 hours/day.
CO = carbon monoxide, VOC = volatile organic compounds; other pollutant descriptions are provided as footnote in Table 4-1.

Pipeline construction operations also would generate fugitive dust emissions from earth-moving activities and wind erosion of disturbed acreage. The assumed average daily pipeline construction progress of up to 4 miles per day in conjunction with an estimated disturbance width of 75 feet yields a total disturbed acreage of approximately 36.4 acres per day. The average daily fugitive dust emissions for a typical pipeline spread are estimated at 1,431 pounds per day using an emission factor of 1.2 tons per acre per month for construction activities (USEPA 1985). It is estimated that as much as half of the total disturbed acreage along the pipeline route (162 miles x 75 feet) would be exposed to wind erosion at any one time. With a maximum exposed area of 736 acres, the predicted emissions from wind erosion are 1,533 pounds per day using the emission factor of 0.38 tons per acre per year (USEPA 1985). This is equivalent to about 0.03 pounds of dust becoming airborne each day from a length of 10 feet of pipeline ROW. The resulting concentrations of dust averaged over a 24-hour period would be less than 0.01 $\mu g/m^3$, or less than 1 percent of the daily standard of 150 $\mu g/m^3$. This estimate includes dust from the use of roads and the ROW.

These emissions would result in minor short-term impacts on local air quality. These impacts would be restricted to the brief construction period along each stretch of the pipeline route. The construction impacts would diminish once construction activities end and after disturbed areas are reclaimed. Construction impacts would be minimized by watering or chemically stabilizing exposed areas on access roads, limiting the clearing of vegetation, and curbing vehicle and

equipment operation where practical. Vehicular exhaust and crank case emissions from gasoline and diesel drivers would comply with applicable USEPA mobile emission regulations (40 CFR 85).

Air quality impacts due to operation of the proposed pipeline would be minimal. Minor transient emissions would occur from maintenance activities along the pipeline route. Emissions would include exhaust from maintenance vehicles and equipment, as well as fugitive dust from maintenance activities, wind erosion, or vehicular traffic. Emissions from operation of the pipeline would be infrequent and short-term resulting in no significant impact to air quality.

Abandonment of the proposed pipeline would result in short-term emissions from the operation of vehicles and the generation of fugitive dust. Fugitive dust emissions also would be generated from earth-moving activities and wind erosion of limited disturbed areas from surface facility removal. Pipeline abandonment operations would be relatively small in scale, spread out at various locations along the pipeline route, and short-term, resulting in no expected significant impact to air quality.

## 4.2 Geology and Soils

### 4.2.1 Geology

Based on maps of known geological hazards, the potential geological hazard areas include: 1) scattered landslide deposits in the Green Mountain area; 2) two active faults just north of Green Mountain; 3) one area of semi-active windblown sand deposits just north of Natrona; and 4) a location within 1 mile of a historic (1916) earthquake epicenter located on the Green Mountain fault segment of the North Granite Mountain fault system (approximately MP 121), plus 16 other earthquake epicenters located within 25 miles of the proposed pipeline and 7-mile lateral (see Table 3-1). These geological hazards would require detailed evaluation during final engineering for pipeline construction practices and safeguards. Verification of the presence of these hazards could dictate special construction techniques, special revegetation requirements, and/or monitoring after construction. These areas are addressed in the POD (Section VI); protection measures are presented in Section 2.5.

The landslide deposits in the project area (approximately 22.7 acres) appear to be old, and they should not pose a problem to the operation of the buried pipeline (Table 3-1). However, there would be a short-term hazard during pipeline construction, if a storm event reactivated surficial deposits when the construction trench was open (Case 1990). Windblown sand deposits may constitute a minor to moderate hazard to any downwind homes or roads if reactivated during construction (Case 1990).

Numerous areas crossed by the proposed route contain steep slopes and erodible soils (see Table 3-2). In addition, areas with historic landslide occurrences have been identified along the route (see Table 3-1). Special construction practices, as discussed in the Section 2.5, would be employed to cross areas of steep slopes.

Operation and maintenance of the proposed pipeline would not be expected to affect any areas with geologic hazards. If vegetation cover is disturbed in potential landslide or windblown sand areas during maintenance activities, these areas would be revegetated as soon as practical. Periodic monitoring inspections after the first and second growing season would determine the status of these areas.

Since the pipe would remain in the ground, pipeline abandonment would not be expected to disturb or reactivate geologic hazard areas such as windblown sand deposits and potential landslide areas.

### 4.2.2 Soils

Pipeline construction would create surface disturbances associated with: 1) ROW clearing and grading, 2) access trail and road maintenance, and 3) ancillary facility construction. Land disturbance would result in: 1) vegetation removal where grading is needed; 2) compaction of soil by construction equipment; 3) alteration of the soil profile within the excavated trench area of the pipeline, on hillside cuts in steep-sloping areas, and in borrow areas for roads; and 4) potential reduction in soil stability on steep sidehill areas. Accelerated wind and water erosion would occur where land has been disturbed. Vehicles could cause ruts in unsurfaced access roads during wet weather, and the ruts could concentrate runoff causing gully erosion. Measures to control these impacts are included in Section 2.5 and the POD.

In total, an estimated 1,240 acres located within the construction ROW contain sensitive soils. The types and locations of these sensitive soils are listed in Table 3-2. Reclamation and erosion control would be difficult on some of the soils along the proposed pipeline route, especially in areas of less than 9 inches of annual precipitation (from MP 128 to 205) and on the steeper sloping areas (15 percent or more), particularly those steeper sloping areas over shallow soils (20 inches or less to bedrock). Soils with unfavorable properties, including thin surface layers, moderate to strong salinity and alkalinity, clayey surface and subsoils, and shallow depths over bedrock are common and would present problems for erosion control and revegetation. Locations of sensitive soils along the proposed mainline and 7-mile lateral routes are presented in Table 3-2.

The erosion control, reclamation, and revegetation program, (Section VII and Appendix G in the POD) and Storm Water Pollution Prevention Plan (Appendix C in the POD), would provide an

effective program that would ensure successful erosion control and restoration of all land disturbance. PSC would follow the reclamation plans described in the POD when operating on BLM and State of Wyoming lands, and would comply with soil protection and land use goals identified by the landowner on private lands.

Most of the impacts to soil resources would be short-term, since all disturbed areas not needed for operations would be reclaimed within 1 year of construction. Most reclamation would be completed within a few months of disturbance. However, some soil impacts may occur if adverse weather conditions (mainly heavy rainstorms) occurred during construction or before reclamation and erosion control measures could be implemented.

Some unquantifiable soil loss resulting from accelerated wind and water erosion would occur until erosion measures were implemented (up to 1 year). In addition to the sensitive areas outlined in Table 3-2, a few small unquantifiable areas (mainly abrupt steep slopes and localized areas with soil containing unfavorable physical and chemical properties) would be subject to accelerated erosion and require intensive and continuing follow-up erosion control measures.

With effective use of POD erosion control/revegetation procedures, understory vegetation on sites without special problems is expected to return to near preconstruction conditions within 5 years after construction. Problem areas may require replanting and/or use of special revegetation techniques, if revegetation does not respond in one to two growing seasons. In areas of limited precipitation (less than 9 inches), and where there are shallow soils and/or low permeability soils, reclamation techniques that enhance permeability and conserve moisture would increase the potential for successful revegetation. Impacts to overstory vegetation would be long-term with shrubs and trees taking several years to become reestablished, e.g., 10 to 20 years for sagebrush, 20 to 30 years for desert shrub vegetation, and 50 to 75 years for coniferous woodland tree species (BLM 1985a).

As described above, some soil loss would result from wind and water erosion until erosion control measures are implemented and begin to take effect (approximately 1 year after construction). Operations and maintenance of the majority of the pipeline route and 7-mile lateral would not result in additional impacts to soil after erosion control measures have stabilized. Problem areas such as abrupt steep slopes may require continuing follow-up measures during the operations phase of the project.

Potential effects of fuel spills on soils would include contamination at the spill site. Protection measures such as berming around the refueling areas and monitoring for leaks or spills would minimize effects on soils. Fuel-contaminated soils would be removed and disposed of following WDEQ regulations.

The proposed pipeline would be abandoned in place and would involve the removal of surface facilities along the route. Problem areas may continue to require monitoring and the implementation of additional erosion control measures to ensure minimal impacts to soils. All areas disturbed during abandonment would be seeded with the appropriate seed mixture to ensure that an acceptable stand of vegetation is established.

### 4.3 Mineral and Paleontological Resources

Pipelines can affect the recovery of mineral resources in an area where prior mineral rights have not been established, and mineral extraction equipment would be required to work around pipes or avoid the ROW. If the resource is already leased (e.g., coal) or under valid claim (e.g., uranium), issuance of a ROW would not affect the potential for development of the resource, since the mineral resource would have a prior right. In this case, PSC may be responsible for facilitating mineral extraction at a later date.

Areas having moderate or high coal development potential have not been identified along the mainline route or 7-mile lateral. Uranium development, particularly in the Pumpkin Buttes area, could introduce potential surface facility problems, although no conflicts are projected at this time. With a large pipeline crossing a uranium area, the complexity of placing distribution and collection lines for uranium in situ development would increase. This would not significantly affect actual uranium extraction.

Since an adjustment of 75 feet would not be critical for placement of wells for oil and gas development, the ROW should not adversely affect future oil and gas development. The presence of a $CO_2$ source near other proposed oil and gas developments may have a positive impact on oil recovery in the future. Other existing oil fields in the vicinity of the proposed pipeline are likely candidates for future enhanced oil recovery.

Mineral resources in the area of the proposed 7-mile lateral are scarce. The only identified economic mineral resource in the area is bentonite deposits commonly associated with the Cody Shale (Harris et al. 1985). The route would not hinder any current mining operations, and because of the relatively short length of the proposed lateral, it is unlikely that any future mining operations would be impacted.

Fossils may be disrupted or destroyed during ROW clearing, trenching, or access road maintenance. As a result, irreplaceable knowledge could be affected. Table 3-3 indicates that approximately 49 miles (or 32 percent) of the pipeline route has a high potential for paleontological resources. In addition, 11 significant sites were found during the 1986 paleontological survey; these sites and their mitigation recommendations are summarized in

Table 3-3. Conversely, construction activities, such as trenching, are often responsible for the discovery of previously unknown important paleontological resources.

In accordance with BLM's standard stipulation for surface-disturbing actions in strata with a high potential for paleontological resources (BLM 1989), highly sensitive areas would be monitored during construction by a qualified paleontologist with a permit issued by the Wyoming State Office of the BLM. Should significant fossil resources be encountered along the pipeline route, a paleontologist from the appropriate state or federal agency would be contacted and measures would be taken to identify and preserve the fossils. While pipeline construction may inadvertently destroy some paleontological resources, no significant impacts are expected with implementation of the required environmental protection measures (Section 2.5 and Table 3-3 in EA and the POD).

It should be noted that the results of the previous paleontological survey, along with recommendations for mitigation of significant sites, were submitted to the BLM for review. BLM concurred with the recommended mitigation of paleontological resources (BLM 1987a). The applicant would submit any fossils discovered as a result of construction to the attention of the Authorized Officer. In addition, a paleontologist would complete the recommended mitigation procedures prior to or during construction.

Because of the relatively short length of the proposed lateral route and the nature of the geologic media underlying the proposed lateral, it is highly unlikely that any vertebrate remains would be encountered. Personal communication with Ms. Laurie Bryant (2000), Regional Paleontologist for the BLM in Wyoming, supports this conclusion and has recommended that no further mitigative action (i.e., paleontological surveys) be required for the proposed lateral. In the unlikely event significant fossilized remains are discovered during construction, the remains would be treated in a manner consistent with the protective measures described for the mainline portion of the proposed route.

No conflicts are anticipated at this time with regard to extraction of minerals along the proposed pipeline route or 7-mile lateral. Routine operation and maintenance of the pipeline would not affect the potential extraction of coal, uranium, oil, or gas resources in the vicinity of the route.

Impacts to the paleontological resources would occur primarily during the construction phase of the project. Operation of the proposed pipeline would not involve additional ROW clearing, trenching, or surface disturbance and, therefore, it is anticipated that no additional impacts to these resources would occur.

The proposed pipeline would be abandoned in place. Abandonment would not result in significant surface or subsurface disturbance and, therefore, is not expected to result in impacts to mineral or paleontological resources.

## 4.4 Water Resources

### 4.4.1 Surface Water

Impacts to surface water resources would depend upon the crossing technique and the physical characteristics of the streams crossed by the pipeline. Directional drilling would be used to cross the Sweetwater River, while all other streams (perennial and intermittent) would be trenched. By using directional drilling at the Sweetwater River, direct disturbance to the channel would be minor. One work area (250 feet x 400 feet) would be located approximately 300 feet from each bank on each side of the river. The erosion control and revegetation measures (Section VII and Appendix C in the POD) would be used to avoid sediment input to the river.

A temporary bridge would be used to transport construction equipment across the Sweetwater River (see Figure 3-7 in POD). By placing the bridge structure in the river, temporary disturbance to the banks and stream bottom (8 feet x 50 feet) would contribute increased sediment in a localized area. Erosion control and revegetation measures also would be used in the disturbed areas to reduce sediment input to the river (see Section 2.5). No other effects on water quality are expected to occur, as a result of construction across the Sweetwater River.

During trenched crossings of streams, potential impacts to surface water resources would be restricted to those locations where the pipeline crosses a perennial, intermittent, or ephemeral stream. Construction involves the excavation of a trench across the stream, placement of pipe, and backfill of the trench. The trench would be placed at right angles to the stream to minimize the length of streambed disturbance during construction. Backfill would be placed such that the grade of the streambed is maintained, and banks would be restored to their approximate original condition so that flow conditions in the stream are not modified. Water quality standards for turbidity may be temporarily exceeded at the pipeline crossing and for a distance of less than 1 to 3 miles downstream of the crossing (BLM 1985a).

A small surface water depletion would occur as a result of withdrawals for hydrostatic testing, directional drilling, and dust abatement. A total of approximately 6.4 acre-feet would be withdrawn from the Sweetwater River in the fall for hydrostatic testing (3.3 acre-feet) and directional drilling (3.1 acre-feet). Most of this water (approximately 80 percent) would be returned to the Sweetwater River after filtering through a straw bale structure. The consumptive loss of water would result from evaporation and directional drilling use. The quality of hydrostatic test water discharges

would be in compliance with the Wyoming permit requirements. Approximately 1.7 acre-feet of water would be obtained from irrigation companies or municipal sources for dust abatement. The dust abatement water would be 100 percent consumptively used.

The pipeline would cross approximately 2.5 miles of the BLM Salt Creek ACEC, which is located in the Casper Field Office Area. The pipeline crosses Government Creek, west of the Smoky Gap Oil Field. Impacts to the water quality in the ACEC are not expected to be significant because Government Creek is an intermittent drainage and would be crossed during low-flow periods. Salt Creek is crossed at MP 236, 2.5 miles northwest and downstream of the ACEC.

Potential leaks or spills from construction equipment could affect water quality if petroleum products entered perennial drainages. Inspections would be required daily to detect any spills or leaks. No refueling would be allowed within 100 feet of streams to eliminate risks of fuel entering water bodies (Section 2.5 and the POD).

In summary, temporary construction impacts to surface water resources would occur at perennial stream crossings as a result of the introduction of sediment. This short-term impact would dissipate within less than 1 mile downstream of the pipeline crossing. Water for hydrostatic testing would be obtained from the Sweetwater River and would be disposed of according to applicable federal, state, and local regulations. Therefore, impacts to surface water resources due to construction of the pipeline are not expected to be significant.

The probability of a pipe leak or rupture occurring at a stream crossing is extremely low due to the thicker-walled type of pipe used. A rupture would be detected immediately, and block valves would halt the $CO_2$ flow. Any minor leaks would be detected through periodic maintenance inspections. However, should such a rupture occur, the pressurized $CO_2$ would be vented rapidly into the atmosphere. The initial rupture could toss sediment, rocks, and other debris into the air in the immediate vicinity of the rupture and could disturb sediment in the streambed causing temporary elevation of TSS levels and turbidity at the crossing and a short distance downstream. Most of the $CO_2$ would bubble through the water and vent into the atmosphere (PIC 1988a). However, $CO_2$ is soluble in water as carbonic acid which could influence the alkalinity of the stream.

Upon abandonment of the proposed pipeline, all surface facilities would be removed, and the resulting disturbed ground would be reclaimed. The pipe would be abandoned in-place. Therefore, no disturbance of surface streams is anticipated. The impact to surface water resources due to abandonment of the pipeline would not be significant.

### 4.4.2 Groundwater

The trench excavated for pipe placement is above the water table along most of the proposed pipeline route. Portions of the route in the immediate vicinity of perennial streams may encounter shallow groundwater during excavation. Following backfill of the trench, these areas would be returned to their original condition, and groundwater impacts would not be expected. No groundwater would be encountered at the Sweetwater River crossing, since directional drilling would be used. There would be no withdrawals of groundwater for use in hydrostatic testing. Therefore, no impacts to groundwater resources due to these activities are anticipated.

## 4.5 Vegetation, Wetlands, Agriculture, and Range Resources

### 4.5.1 Vegetation and Wetlands

The estimated acreage of each vegetation type that would be disturbed, removed, and reclaimed as a result of construction and installation of the pipeline and associated ancillary facilities is provided in Table 4-3. Approximately 1,494 acres of vegetation would be temporarily disturbed, including 1,421 acres of sagebrush-grass, 4 acres of saltbush–greasewood, 8 acres of juniper woodland, 4.5 acres of riparian and wetland areas, and 30 acres of cropland. Approximately 1,489 acres (99.7 percent) of the total disturbance (1,494 acres) would be reclaimed; 4.9 acres (0.3 percent) associated with the construction of aboveground facilities would not be reclaimed, resulting in the permanent loss of 4.9 acres of sagebrush-grass vegetation.

**Table 4-3**
**Estimated Acreage of Vegetation Types Disturbed, Removed, and Reclaimed During Construction of the Proposed PSC $CO_2$ Pipeline**

| | Main Route and Salt Creek Lateral | | | Aboveground Facilities | | |
|---|---|---|---|---|---|---|
| Vegetation Type | Acres Disturbed[1] | Acres Removed | Acres Reclaimed | Acres Disturbed[2] | Acres Removed[2] | Acres Reclaimed |
| Sagebrush-grass | 1421.2 | 0 | 1421.2 | 19.1 | 4.9 | 14.2 |
| Saltbush-greasewood | 4.1 | 0 | 4.1 | 0 | 0 | 0 |
| Juniper woodland | 8.1 | 0 | 8.1 | 3.0 | 0 | 3.0 |
| Wetland, Riparian or other Waters of the U.S. | 4.5 | 0 | 4.5 | 3.7 | 0 | 3.7 |
| Cultivated cropland | 30 | 0 | 30 | 0.1 | 0 | 0.1 |
| Total | 1,468 | 0 | 1,468 | 25.9 | 4.9 | 21 |

[1] Acreage determined using the following formula: mileage crossed (Table 3.5) x 5,280 feet (in mile) x 75 feet (width of ROW) divided by 43,560 (square feet in an acre). Differences in acreage totals compared to Table 2-1 are due to rounding.
[2] Provided by Universal Engineering.

Impacts to vegetation would not be considered significant with implementation of the proposed environmental protection procedures identified in Section 2.5 and the POD. PSC also has developed an Erosion Control, Revegetation, and Restoration Plan; a Reclamation Plan; and a Weed Control Plan as part of the POD to be approved by the BLM. These plans would include specialized rehabilitation procedures tailored to the variety of local environments and conditions. With effective use of the proposed erosion control/revegetation procedures, grasses and forbs would become reestablished along the ROW to near pre-construction conditions within 5 years of construction. Shrubs would take longer to become established in the construction ROW, with sagebrush taking 10 to 20 years and saltbush and greasewood taking 20 to 30 years. Trees greater than 10 inches in diameter would not be allowed to grow in the ROW, resulting in a long-term loss of this vegetation type.

Impacts that may occur if desirable plant species are not established in the ROW within a short period of time include higher soil erosion rates and reduced forage production. Understory vegetation in this zone may take a considerable amount of time to become reestablished due to limited annual precipitation, and as a result, the construction ROW may be subsequently invaded by weedy plant species.

Potential effects of fuel spills on vegetation could include direct toxicity and contamination of soils. Protection measures involving berming around refueling areas and monitoring for spills and leaks would minimize effects on vegetation.

Approximately 4.5 acres of wetlands and riparian areas would be temporarily disturbed by the pipeline project, based on a construction ROW width of 75 feet. If a ROW of 50 feet or less can be used in all of these areas, the disturbance acreage would be reduced to approximately 1.78 to 3 acres. An additional 3.22 acres of potential wetland areas could be disturbed at TUA locations proposed at the Sweetwater River crossing. TUA sites also were identified in other Waters of the U.S. locations at MP 122.6, 206.5, and 259.6. Based upon the protection measures identified in Chapter 2.0, disturbance to wetlands and other WUS would be reduced if field confirmation indicates that the crossings could be avoided.

PSC has committed to avoiding wetlands and other sensitive water features wherever reasonably possible. If a feature cannot be avoided, ROW construction widths would be reduced wherever possible to 50 feet or less.

The largest wetland area identified along the proposed route was associated with a series of beaver ponds located at MP 113.35 and measured approximately 450 feet in width at the crossing. If the wetland cannot be avoided, approximately 0.52 acre (or less) of the wetland would be disturbed, assuming a construction ROW width of 50 feet or less in this area. Other potential

jurisdictional wetland crossings along the main ROW that could experience a disturbance area of 0.07 acre or more (based on a 50-foot-wide ROW if they cannot be avoided) were identified at MP 119.38, 134.25, 157.9, 158.01, 162.04, 187.6, 228.21, 233.90, 235.84, 235.87, 238.45, and 248.17 (see Table B-1). Two wetland areas with the potential for disturbance of greater than 0.09 acre also occur at MP L0.60 and L2.24 on the lateral ROW. Eight locations were identified where the ROW parallels a surface drainage for more than 500 feet; these areas occur at MP 118.6, 118.8, 121.21, 152.8, 165.05, 192.10-192.5, 232.0, 233.8, and 256.5. The COE generally requires formal notification if more than 0.1 acre at a wetland crossing would be disturbed or if a project parallels a waters of the U.S. within 50 feet for more than 500 feet. Formal notification can involve preparation of an individual Section 404 permit application. The majority of the paralleled areas could be avoided by relocating the ROW 50 to 100 feet away from the drainage.

The largest crossing of a riparian area would occur at MP 124.28, with a potential disturbance area of 0.06 acre assuming a 50-foot-wide ROW. The total acreage potentially disturbed in riparian areas, assuming a 50-foot construction ROW, was 0.11 acre. Five crossings of riparian areas were identified along the proposed ROW at MP 116.25, 116.30, 116.95, 124.28, and 253.02. The COE has indicated that riparian areas, particularly those with cottonwoods, should be avoided and PSC has agreed to make reasonable efforts to avoid these areas.

To confirm wetland and riparian locations in relation to the ROW, a biological monitor would accompany or immediately follow the survey crew during staking of the route to identify wetland, riparian, or other sensitive surface waters that may have been missed during the original surveys and to offer suggestions on modifying the route to avoid sensitive areas. Wherever reasonably possible, wetlands and other WUS would be avoided. Additionally, environmental inspectors would be present during construction of the line to ensure that wetlands and other important surface water features are either avoided or sufficiently mitigated. Implementation of these protection measures, as well as others as discussed in Section 2.5, should reduce effects to wetlands and other significant surface water features.

Disturbance within riparian/wetland areas and other waters of the U.S. from construction of the proposed route would be temporary. Herbaceous vegetation in palustrine emergent wetlands would be expected to reestablish itself to pre-construction levels within 3 to 5 years following the completion of reclamation, resulting in a short-term loss of vegetation and available habitat for some wildlife species. Reestablishment of woody wetland species (shrubs or trees less than 10 inches in diameter) in palustrine scrub/shrub wetlands would take greater than 5 years to achieve pre-construction levels, resulting in a long-term loss of vegetation and available habitat for some wildlife species.

The potential effects of a fuel spill would be the same as discussed for surface water and vegetation. Committed protection measures, including no refueling within 100 feet of water bodies and berming around refueling areas, would prevent impacts to wetlands from fuel spills.

### 4.5.2 Noxious Weeds

Approximately 50 existing noxious weed populations were identified along the proposed ROW during the June and July 2000 surveys of the proposed line. The intent of the noxious weed surveys was to identify the location and extent of as many existing noxious weed populations along the proposed ROW as possible. The weed survey data are being used to plan weed control measures along the proposed route to prevent the spread of noxious weed populations within existing infestation areas or to areas previously free of noxious weeds. Depending upon BLM approval, PSC would implement weed control measures along the ROW as described in Section 2.5 of this EA, in the Noxious Weed Control Plan (Appendix F of the POD), and the reclamation plan (Appendix G of the POD). Control measures could include pretreatment of weed infestations, reseeding disturbance areas as soon as possible, placement of temporary fencing to reduce grazing pressures until native vegetation becomes reestablished, and post-reclamation monitoring to identify weed locations requiring additional treatment.

Information collected during the noxious weed surveys, including species identified, proximity to the project area, locations of infestations, and extent of infestations, has been submitted to the jurisdictional BLM offices and local Weed Districts. Weed control measures, as described in the Noxious Weed Control Plan being provided to the BLM and the local Weed Districts, would be put into practice along the proposed ROW as directed by the BLM and the Weed Districts.

Weed surveys of the proposed ROW were conducted in June and July 2000 in anticipation of an August 2000 construction start date. By the time of construction, weed populations may have expanded or reduced in size and location from those identified during the 2000 surveys. Because of this, PSC would coordinate with the appropriate BLM Field Offices prior to initiation of construction to determine whether additional weed protection measures would be warranted.

Implementation of the proposed environmental protection measures and control techniques identified in the Noxious Weed Control Plan should limit the spread of noxious weeds along the proposed ROW. No significant effects to vegetation or substantial increases in weed infestations are anticipated as a result of activities associated with the Proposed Action.

### 4.5.3 Agriculture and Range Resources

Disturbance to cultivated cropland, hay meadows, and rangeland by the construction of the proposed route would be temporary. Approximately 30 acres of cultivated cropland would be disturbed during construction. Removal of rangeland vegetation from the 75-foot-wide construction ROW and other disturbance areas would result in the temporary loss of forage production. No reductions in stocking rates would occur in any allotments as a result of project construction, since the loss of vegetation would be short-term. Forage production could take several years to return to pre-construction levels in areas with poor soils (e.g., rocky, shallow, saline, or alkaline). Areas within the construction ROW that have not been successfully reclaimed would be seeded in accordance with the reclamation success monitoring program included in the Reclamation Plan. Long-term impacts to rangeland or livestock grazing operations are not anticipated as a result of project construction or operation activities. Protection measures for livestock grazing are listed in Section 2.5 and the POD.

Construction may temporarily displace wild horses, if present, from their accustomed range; however, use areas and migration routes would not be expected to change. Short-term impacts to wild horses would include the temporary reduction in forage along the ROW. Approximately 5 years after reclamation, highly palatable forage would be reestablished in the construction ROW. No long-term impacts to wild horse herds are anticipated.

### 4.5.4 Threatened, Endangered, Candidate, and Sensitive Plant Species

Field surveys determined that two special status plant species occur within the ROW: Porter's sagebrush at MP 176.7 and Nelson's milkvetch at MP 196. Construction could result in a direct impact (e.g., crushing, removal) to a maximum of 15 individual Porter's sagebrush and 7 individual Nelson's milkvetch. If possible, individual plants would be avoided by construction equipment. The total estimated populations of these two species are not known; however, based on reviews of previously documented occurrences, occupied habitat within the ROW represents less than 1 percent of the total potentially suitable habitat in Wyoming. As a consequence, the loss of individuals from the ROW would result in localized sub-population effects; however, it is not expected that the overall species' populations would be affected.

## 4.6 Wildlife

The construction activities associated with the proposed pipeline would result in both direct and indirect impacts to wildlife resources. The degree of impacts to wildlife species and their associated habitats from project construction would depend on the temporal and spatial

relationships of these resources to the project area and on the mobility and sensitivity of the wildlife species.

Overall, impacts to wildlife species could include the effects of habitat loss, incremental habitat fragmentation, animal mortality, animal displacement, increased noise, and additional human presence. Habitat loss would affect forage availability, escape and thermal cover, and breeding and wintering areas for certain wildlife species. Project construction could result in the loss of less mobile species and temporarily displace animals from the project area into adjacent and perhaps less suitable habitats and/or habitats that are already at their respective carrying capacities. Environmental protection measures have been developed for the project to minimize potential construction-related impacts to wildlife resources. These measures are listed in Section 2.5.

### 4.6.1 Game and Nongame Wildlife Species

#### 4.6.1.1 Big Game Species

Construction-related impacts to big game species (e.g., mule deer, pronghorn, elk, and moose) would result in an incremental, short-term loss of native vegetation within the proposed construction ROW and the temporary displacement of big game species away from the proposed ROW. Big game animals would likely decrease their use of habitats within 0.5 mile of the construction activities (Lyon and Ward 1982; Reed 1981). This disturbance would be short-term, and it is assumed that animals would return to the area following the completion of construction. Table 4-4 summarizes the designated big game seasonal ranges crossed by the proposed project route, which coincides with the seasonal ranges shown in Table 3-8. PSC has committed to a number of environmental protection measures to minimize potential impacts to big game species (see Section 2.5). The committed constraint periods for sensitive big game ranges are presented in Table 4-4. These constraints would entail a “no-disturbance construction constraint window” along these areas. However, exceptions or waivers to these seasonal construction constraints may be authorized in writing by the BLM’s Field Office Manager on a case-by-case basis. Based on these committed measures, no direct impacts to wintering pronghorn, mule deer, elk, or moose from project construction would be anticipated. In addition, no impact to elk calving areas from increased noise or human presence would occur.

Pipeline construction activities would result in an incremental disturbance to vegetation on 256 acres of pronghorn crucial winter range, 53 acres of mule deer crucial winter range, 23 acres of elk crucial winter range, and 22 acres of moose crucial winter range. Construction would temporarily remove most of the vegetation on 19 acres of elk parturition range. Big game crucial winter and parturition ranges are important to maintain big game populations. However, these disturbance acreages represent a relatively small percentage of the crucial winter and parturition

**Table 4-4**
**Constraint Periods for Big Game Crucial Winter and Partuition Ranges Crossed by the Proposed PSC $CO_2$ Pipeline Project**

| Species | Habitat Type | Mileposts | Miles Crossed | Constraint Period |
|---|---|---|---|---|
| Pronghorn | Crucial Winter | 125.6-137.8 | 12.2 | November 15 to April 30 |
| Pronghorn | Crucial Winter | 180.4-195.9 | 15.5 | November 15 to April 30 |
| Mule Deer | Crucial Winter | 136.1-136.5 | 0.4 | November 15 to April 30 |
| Mule Deer | Crucial Winter | 138.5-143.9 | 5.4 | November 15 to April 30 |
| Elk | Crucial Winter | 115.4-117.5 | 2.1 | November 15 to April 30 |
| Elk | Parturition | 115.4-117.1 | 1.7 | May 1 to June 30 |
| Moose | Crucial Winter | 132.6-134.7 | 2.1 | November 15 to April 30 |

ranges available in the region for these species. Loss of available forage (e.g., woody shrubs) for big game species from construction activities would result in a long-term (greater than 5 years) impact. However, herbaceous forage production would return to pre-construction levels within 5 years, following the completion of reclamation.

PSC has committed to constructing soft plugs and ramps along prominent game trails (see Section 2.5). These features would allow crossing of the trench and provide an escape route for animals that enter the trench, thereby minimizing the potential for animals to become trapped. Based on these committed environmental protection measures, construction-related impacts and potential disturbance to big game species from human activities would be low.

#### 4.6.1.2 Small Game Species

Effects to upland game birds associated with the proposed project would consist of the incremental loss of wintering, breeding, nesting, and/or brooding habitat. Because of their relative sensitivity to disturbance, sage grouse would be the most likely species impacted by construction activities, if construction was to occur during the breeding season (March 1 to May 15) or nesting period (March 1 to July 7). A total of 13 active leks were identified within a 2-mile radius of the proposed ROW during the 2000 sage grouse survey. Indirect long-term (greater than 5-year) impacts would result from the temporary loss of approximately 336 acres of breeding/nesting habitat. Habitat disturbance within 0.25 mile of a lek site could result in increased predation of sage grouse during the breeding season. To minimize this potential impact, PSC has committed to a 0.25-mile permanent construction avoidance buffer around known lek sites, which would be implemented on a site-specific basis, as determined in coordination with the BLM.

If construction was to occur during the breeding or nesting season, direct impacts to sage grouse, if present, could include abandonment of a lek site, nest abandonment, or loss of eggs or young. As described in Section 3.6.1, 13 active leks were identified within a 2-mile radius of the proposed ROW during the 2000 sage grouse surveys. Table 4-5 summarizes the constraint periods for breeding and nesting sage grouse along the proposed project route, based on the 13 active leks documented during the 2000 surveys. However, no direct impacts to breeding or nesting grouse would be anticipated from construction activities based on the current construction schedule (August 2001 through late January 2002). If construction were to extend into the 2002 breeding season, SPC has committed to: 1) conducting additional sage grouse surveys through areas of suitable habitat prior to construction, and 2) implementing a seasonal construction constraint within a 2-mile radius of active lek sites. However, exceptions or waivers to these seasonal construction constraints may be authorized in writing by the BLM's Field Office Manager on a case-by-case basis.

**Table 4-5**
**Constraint Periods for Breeding and Nesting Sage Grouse Along the Proposed PSC $CO_2$ Pipeline Project[1]**

| Mileposts | Miles Crossed | Constraint Period |
|---|---|---|
| 128.2-134.5 | 6.3 | March 1 to July 7 |
| 151.4-155.3 | 3.9 | March 1 to July 7 |
| 171.3-178.7 | 7.4 | March 1 to July 7 |
| 193.2-197.2 | 4.0 | March 1 to July 7 |
| 214.6-222.7 | 8.1 | March 1 to July 7 |
| 244.6-246.6 | 2.0 | March 1 to July 7 |
| 259.4-264.7 | 5.3 | March 1 to July 7 |

[1]Based on 2000 sage grouse survey results.

Incremental habitat loss for chukar, mourning dove, and Hungarian partridge also would result from the proposed project construction. In most instances, suitable habitat adjacent to the project areas would be available for use by these species. This displacement would be temporary and short-term.

Construction activities associated with the proposed pipeline could temporarily displace small game mammals from the proposed ROW, as a result of short-term habitat loss. Some species with depressed populations would be able to relocate to adjacent habitats. Other species, with populations at or near the maximum carrying capacity, could suffer some increased mortality and

corresponding potential reduction in productivity during the construction year. However, it is not likely that the expected loss would have a measurable effect on species populations.

Effects to waterfowl could result from the short-term loss of wetland and riparian habitats. Potential impacts to nesting waterfowl would depend upon nest location relative to the proposed project area, the timing of the proposed construction, and the duration of the proposed disturbance. Potential impacts would be expected to be low, as the extent of wetland and riparian habitats is primarily limited to the Sweetwater River and small perennial creeks (e.g., Salt and Meadow creeks), and construction is currently scheduled to occur outside the breeding season (April through July). However, if construction were to occur during the breeding season, the potential loss of or disturbance to an active nest, if present, could result in abandonment of the nest and loss of eggs or nestlings. These losses would reduce the pair's productivity for one breeding season.

#### 4.6.1.3 Nongame Species

Construction activities could result in mortalities of less mobile or burrowing nongame species (e.g., small mammals, reptiles and amphibians, and invertebrates) within the ROW, as a result of crushing from construction vehicles and equipment. Other impacts would include temporary displacement of more mobile species (medium sized mammals, adult birds) from the proposed ROW, due to the short-term loss of vegetation. Although habitat exists adjacent to the proposed ROW to support some displaced animals, species that are at or near carrying capacity could suffer some increased mortalities and corresponding potential reduction in productivity during the construction year. Short-term temporary displacement of some species would result until herbaceous vegetation returns to pre-construction conditions (approximately 3 to 5 years). For those species dependent on the sagebrush-steppe habitat, long-term (greater than 5 years) displacement would occur until shrubs become reestablished. The proposed project would result in an incremental increase in habitat fragmentation, which would influence the suitability of adjacent habitats, particularly in undisturbed areas. However, due to the temporary and linear nature of the project, habitat fragmentation would likely have a greater impact on smaller animals that may leave the ROW until vegetation becomes reestablished.

A number of raptor species (e.g., golden eagles, ferruginous hawks, prairie falcons, red-tailed hawks, Swainson's hawks, great-horned owls, and burrowing owls) seasonally occupy the habitats crossed by the proposed project. The incremental, temporary loss of nesting and foraging habitat along the ROW would result in a short-term indirect impact to these species. To minimize the potential impact to nesting habitat, raptor nest sites identified within the proposed areas of disturbance would be avoided to prevent their removal. In addition, attempts would be made to avoid trees 10 inches in diameter or greater during construction to protect future nest sites (see

Section 2.5). If project construction were to occur during the breeding season (February 1 to July 31), indirect impacts could result from human-oriented activities, particularly for ferruginous hawks, if present. Direct impacts to nesting raptors, as a result of project construction, could include abandonment of a breeding territory or nest site or the potential loss of eggs or young. These losses, if they were to occur, would reduce productivity for that breeding season. However, no direct impacts to nesting raptors would be anticipated from construction activities based on the current construction schedule (August 2001 through late January 2002). If construction were to extend into the 2002 breeding season, PSC has committed to conducting aerial and/or pedestrian nesting raptor surveys, as applicable, through areas of suitable habitat to identify active nest sites within the project area, prior to construction (see Section 2.5). Since a number of variables (e.g., nest location, species' sensitivity, breeding, phenology, topographical shielding) would determine the level of impact to a breeding pair, appropriate protection measures, such as seasonal constraints and establishment of buffer areas, would be implemented at active nest sites on a species-specific and site-specific basis, in coordination with the jurisdictional agencies. As a result of these committed environmental protection measures, construction-related impacts to raptor species would be anticipated to be low.

Other avian species that would be impacted by the proposed construction activities include nesting passerines or songbirds that use grassland, sagebrush/grassland, riparian/wetland, greasewood, or saltbush habitats that would be crossed by the project. Construction activities during the breeding season (April through July) could result in the abandonment of a nest site or the potential loss of eggs or young, resulting in a loss of productivity for the breeding season. Potential impacts to nesting birds would depend on the nest location relative to the proposed ROW, the phase of the breeding period, the duration of the anticipated disturbance, and species tolerance. Based on the current construction schedule outside the breeding season, construction impacts would be anticipated to be low.

In summary, impacts to game and non-game wildlife associated with the proposed pipeline are anticipated to be minimal, as: 1) only a small portion of the potentially suitable, available habitat would be impacted by project construction; 2) established topsoil handling techniques and subsequent reseeding of disturbed areas would aid in the reestablishment of habitats; 3) the committed environmental protection measures would minimize potential impacts to species during the breeding season and minimize the impacts to their breeding territories; and 4) the short-term nature of the project would minimize the length of time that wildlife would potentially avoid habitats along the ROW.

### 4.6.2 Threatened, Endangered, and Sensitive Species

This section focuses on the impact analyses of federally listed, federally proposed, federal candidate, and other sensitive species that were identified for the project area by the WGFD and WYNDD. Listed and other sensitive species were identified based on available habitat and results of surveys conducted within the project area. Surveys are currently planned for black-footed ferret.

Environmental protection measures were developed for the project to minimize potential construction-related impacts to sensitive species. These measures are presented in Section 2.5.

#### 4.6.2.1 Mammals

**Black-footed Ferret (Federally Endangered)**

Because the black-footed ferret is closely associated with prairie dog populations, prairie dog colonies or complexes of sufficient size and burrow density are considered to be potential habitat for this species. If ferrets were present in prairie dog colonies crossed by the proposed pipeline, they may be impacted by pipeline construction from either the direct crushing of prairie dog burrows occupied by black-footed ferrets or indirectly from increased noise and human presence. If present, ferrets would be most vulnerable in early summer when young kits would be present in the burrows.

In accordance with the USFWS' 1989 black-footed ferret guidelines (USFWS 1989), the Cheyenne USFWS has determined that "because the proposed pipeline construction would represent a minor and temporary disturbance, ferret clearance surveys will be required only for colonies meeting the survey criteria which will be directly disturbed by construction activity. While these colonies must be surveyed in their entirety, no surveys are required on colonies not directly disturbed by the proposed project" (Long 2000). A total of 12 prairie dog colonies would be directly disturbed by the proposed project ROW. These 12 colonies are presented in Table 4-6. Based on relative densities of colonies in the project region, it is assumed that all prairie dog colonies are associated with larger complexes and, therefore, would meet the acreage or size criteria established by the USFWS 1989 guidelines. Consequently, prior to the initiation of construction activities, PSC has committed to conducting black-footed ferret clearance surveys within the 12 colonies that meet the USFWS 1989 survey criteria (i.e., active colonies with burrow densities of at least 8 burrows per acre). A survey report would be prepared for the USFWS for their review and concurrence upon completion of the surveys. This report would summarize the methods used and survey results obtained from each of the 12 colonies. If an occupied territory or fresh sign (i.e., tracks, scat, diggings) is documented, the USFWS would immediately be notified, and appropriate protection measures would be developed.

**Table 4-6**
**Prairie Dog Colonies That Would be Crossed by the Proposed Petro Source $CO_2$ Pipeline Project[1]**

| Milepost | Prairie Dog Species | Acres | Meet USFWS' Ferret Habitat Criteria[2] |
|---|---|---|---|
| 122.0 – 122.5 | White-tailed | 67 | Yes |
| 123.2 – 124.3 | White-tailed | 148 | Yes |
| 150.8 – 151.0 | White-tailed | 2 | Yes |
| 153.3 – 153.9 | White-tailed | 54 | Yes |
| 225.3 – 225.9 | Black-tailed[3] | 179 | To be determined |
| 231.2 – 231.5 | Black-tailed | 29 | To be determined |
| 241.6 – 242.5 | Black-tailed | 205 | To be determined |
| 247.6 – 248.8 | Black-tailed | 960 | To be determined |
| 250.0 – 251.0 | Black-tailed | 238 | To be determined |
| 253.0 – 253.3 | Black-tailed | 46 | To be determined |
| Lateral 0.7 – 1.0 | Black-tailed | 8 | Yes |
| Lateral 1.7 – 1.9 | Black-tailed | 20 | To be determined |

[1]These colonies have either been determined to be active or activity status is unknown.
[2]In this area of Wyoming, it is assumed that all colonies that would be crossed by the project ROW are associated with larger complexes; therefore, whether these individual colonies meet the applicable USFWS' 1989 ferret criteria is limited to activity levels and relative burrow density.
[3]It is assumed that black-tailed prairie dogs occur from MP 225.3 through 253.3 (including the project lateral); however, this has not been confirmed.

**Black-tailed Prairie Dog (Federal Candidate)**

Construction-related impacts to the black-tailed prairie dog would result in direct mortalities of individuals, as a result of crushing from construction activities, vehicles, and equipment. A total of 8 black-tailed prairie dog colonies occur within the proposed construction ROW, and approximately 58 acres of these colonies would be affected. However, it would not be anticipated that construction activities would permanently alter prairie dog colonies that would be crossed by the proposed project, and installation of the pipeline would not restrict the colonization of the ROW by prairie dogs. In fact, habitat disturbance may encourage future colonization in the short term, based on the availability of soft, permeable soils that would occur along the ROW subsequent to project construction, and PSC's committed reclamation plan (Appendix G in POD).

**Swift Fox (BLM Sensitive)**

Direct impacts to breeding swift fox, if present, could result from abandonment of den sites and the potential loss of adults and young from the compaction of dens during project construction. The incremental, temporary loss of potentially suitable breeding habitat along the ROW would

result in a short-term impact to this species, if present. Indirect impacts also could result from increased noise and human presence. However, potential impacts to breeding swift fox would be considered low, based on the rarity of the species and the current construction schedule (August 2001 through late January 2002) which would be outside of the swift fox breeding season. However, if an active swift fox natal den were identified along the ROW during construction, all construction in the vicinity of the den would cease, the BLM would be immediately notified, and appropriate protection measures would be implemented to minimize potential impacts. Consequently, no direct impacts to breeding swift fox would be expected due to project construction.

#### 4.6.2.2 Birds

**Bald Eagle (Federally Threatened)**

No direct or indirect impacts to breeding bald eagles would be anticipated from project construction. As discussed in Section 3.6.2.2, no historic or current bald eagle nest sites have been documented within or adjacent to the proposed project ROW (BLM 2000). In addition, no bald eagle observations or bald eagle nest sites were found during the 2000 breeding raptor surveys for the project (ENSR 2000b). Based on the 2000 raptor survey results and the current construction schedule (August 2001 through late January 2002), which is outside of the bald eagle's breeding season, no impacts to breeding bald eagles would be anticipated from construction activities. If construction were to extend into the 2002 breeding season (February 1 to July 31), PSC has committed to conducting aerial and/or pedestrian raptor surveys, as applicable, through areas of suitable habitat during the breeding season to identify active nest sites within the project area, prior to construction (see Section 2.5). Appropriate protection measures, such as seasonal constraints and establishment of buffer areas, would be implemented at active nest sites on a species-specific and site-specific basis, in coordination with the jurisdictional agencies. As a result of these committed protection measures, no impacts to breeding bald eagles from construction activities would be anticipated.

As discussed in Section 3.6.2.2, no historic or active communal roost sites, winter roosts, or winter concentration areas have been identified within 2 miles of the proposed route; however, individual bald eagles have been observed using the Sweetwater River corridor during the winter (BLM 2000). The nearest historic bald eagle winter roost site areas occur from approximately 2 to 5 miles from the proposed route in the Pine Mountains area (BLM 2000). Consequently, no direct or indirect impacts to roosting eagles are anticipated as a result of project construction, based on the distance of the known historic bald eagle winter roost sites to the project area.

Project construction would result in the incremental loss of potentially suitable bald eagle foraging habitats associated with the upland and wetland areas along the ROW. However, based on the distance of the project ROW from known bald eagle winter roost sites, the lack of bald eagle nest sites in the project area, and the amount of existing foraging upland and wetland habitats in the project region, no impacts to foraging bald eagles would be anticipated as a result of project construction.

In conclusion, project construction or operation would not affect nesting bald eagles, based on the lack of historic or current bald eagle nest sites in the project area and the current construction schedule outside of the breeding season. No effect to historic or active bald eagle communal roost sites, winter roosts, or winter concentration areas, based on the infrequent occurrence of wintering eagles in the immediate project vicinity and the distance (>2 miles) of historic winter roosts from the proposed project. No effect to foraging bald eagles from project construction, based on the distance of the project ROW from historic bald eagle winter roost sites, the lack of bald eagle nest sites in the project area, and the amount of existing foraging upland and wetland habitats in the project region.

**Mountain Plover (Proposed as Federally Threatened)**

No direct impacts to breeding plovers from project construction would be anticipated, based on the current construction schedule (August 2001 through late January 2002). As discussed in Section 2.5, if construction was to occur during the breeding season (April 10 to July 10), PSC has committed to conducting presence/absence surveys within areas of potentially suitable breeding habitat, in coordination with the jurisdictional agencies, to identify any potentially active nest sites in the project study area (200 meters on either side of the pipeline centerline) (see Section 2.5). If active nests were identified, appropriate protection measures including seasonal construction constraints and buffer areas would be implemented on a site-specific basis, as appropriate, to minimize the potential impacts to breeding plovers. In conclusion, no direct impacts to breeding mountain plovers would be anticipated.

Indirect impacts to mountain plover would include the incremental, temporary loss of potentially suitable breeding habitat, as a result of project construction, if present. Based on the Wyoming Gap analysis data, the proposed project would disturb approximately 532 acres of potentially suitable nesting habitat. However, this estimate overstates the amount of potentially suitable habitat that would be crossed by the project, based on the use of generalized vegetation types in the Gap analysis (Felley 2001). If the mountain plover was listed as a federally threatened species, prior to, or during construction, PSC has committed to conducting field verification surveys to further delineate the amount of potentially suitable habitat within the areas identified by the Wyoming Gap. In addition, revegetation seed mixes would be developed and applied within

these areas, in coordination with the USFWS and BLM. As a result of these committed protection measures, potential impacts to potentially suitable nesting habitat for mountain plover would be low.

In conclusion, project construction or operation would not affect nesting mountain plover, based on the current construction schedule outside of the breeding season. Indirect impacts would result in the incremental, temporary loss of potentially suitable breeding habitat. However, if the mountain plover was listed as a federally threatened species, prior to, or during construction, potential impacts to suitable habitat would be considered low, based on PSC's committed protection measures for this species.

**Burrowing Owl (BLM Sensitive)**

No direct impacts to breeding owls from project construction would be anticipated, based on the current construction schedule (August 2001 through January 2002). As discussed for raptors in 4.5, if construction were to extend into the 2002 breeding season, PSC has committed to conducting aerial and/or pedestrian nesting raptor surveys, as applicable, through areas of potentially suitable habitat to identify active nest sites within the project area, prior to construction. In the event that an active nest were located, appropriate protection measures, including seasonal constraints and establishment of buffer areas, would be implemented on a site-specific basis, as necessary. The incremental, temporary loss of nesting and foraging habitat along the ROW would result in a short-term indirect impact to this species until final project reclamation has been completed and the plant communities have been reestablished.

#### 4.6.2.3 Other Sensitive Species

A number of other BLM sensitive species also could be affected by project construction. Four sensitive bat species including long-eared myotis, fringed myotis, spotted bat, and Townsend's big-eared bat could potentially occur within the project area. No impacts to communal roosts (e.g., hibernacula, nursery colonies, bachelor roosts) would be anticipated for from project construction, based on the lack of suitable roost trees, buildings, underground structures, or mines within the project corridor. Project construction would result in the temporary, incremental loss of potentially suitable foraging habitat for these bat species until final project reclamation has been completed and the plant communities have been reestablished.

Impacts to the white tailed prairie dog from project construction would parallel those described for the black-tailed prairie dog in Section 4.6.2.1. A total of four white-tailed prairie dog colonies would be crossed by the proposed construction ROW and approximately 22 acres of these colonies would be affected. Impacts could result in direct mortalities of individuals, as a result of crushing

from construction activities, vehicles, and equipment. However, as stated above, it would not be anticipated that construction activities would permanently alter prairie dog colonies that would be crossed by the project, and installation of pipeline would not restrict the colonization of the ROW by prairie dogs in the future.

Impacts to the common loon, white-faced ibis, American bittern, Wilson's phalarope, and amphibians (northern leopard frog, great basin spadefoot, boreal toad, and spotted frog), if present in the project area, could occur as a result of a short-term, temporary loss of potentially suitable habitat within the wetland/riparian habitats that would be crossed by the ROW. Committed environmental protection measures for minimizing impacts to wetlands (see Section 2.5), including preservation of woody root systems in riparian/wetland areas, where practical, and supplemental planting of woody wetland species removed during construction, would reduce potential effects to these species.

Impacts to the merlin, sage thrasher, loggerhead shrike, Brewer's sparrow, sage sparrow, Baird's sparrow, and McCown's longspur, if present, could occur as a result of a short-term, temporary loss of potentially suitable upland habitats that would be crossed by the ROW. Potential impacts to these species, if present, could include abandonment of a nest site or the potential loss of eggs or young, resulting in a loss of productivity for that breeding season. Potential impacts to these species would depend on the nest location relative to the proposed ROW, the phase of the breeding period, and the duration of the anticipated disturbance. Based on the currently proposed construction schedule outside the breeding season, impacts to this species are anticipated to be minimal.

In summary, impacts associated with the proposed project are anticipated to be minimal as: 1) only a small portion of the potentially suitable, available habitat would be impacted by project construction; 2) established topsoil handling techniques and subsequent reseeding of disturbed areas would aid in the reestablishment of habitats; 3) the committed environmental protection measures would minimize potential impacts to terrestrial wildlife species during the breeding season and minimize the impacts to their breeding territories; 4) the short-term nature of the project would minimize the length of time that wildlife would potentially avoid habitats along the ROW; and 5) the short-term nature of the proposed construction at the Sweetwater River crossing.

## 4.7 Aquatic Resources

Impacts to fish and other aquatic communities from construction of the proposed pipeline would depend upon the physical characteristics of the streams (e.g., flow, bottom substrate, channel configuration, and gradient), construction technique, and time of year. The duration of construction

at each perennial stream crossing could range from several days to several weeks, depending upon the technique.

Direct impacts to aquatic communities and habitat in the Sweetwater River would be minor, since directional drilling techniques would be used. Construction would not affect aquatic habitat because the disturbed areas would be located outside the wetted channel. Vegetation and soil disturbance would occur in one area on each side of the river. However, no overhanging cover would be disturbed. Slight increases in sedimentation would occur due to bridge placement and storm water runoff entering the river. Erosion control structures would be used to minimize sediment input the river, as described in Section 2.5.

Trenching would occur at 10 perennial streams, 5 of which contain recreational game fish species. The other five streams contain native and introduced fish species. Salt Creek contains two sensitive fish species, plains minnow and flathead chub. Direct impacts resulting from trenching across the perennial streams would include increased sedimentation, substrate removal or alteration, and possible removal or disturbance to streamside vegetation. The effects of these changes on aquatic biota could include the following: reductions in the abundance and diversity of plant and macroinvertebrate species, displacement of fish, and alteration of habitat (Reed 1977; Murphy et al. 1981; Waters 1995). Trenching could cause direct mortalities to macroinvertebrates in these streams, as substrate is removed or altered. Macroinvertebrate communities would likely recolonize the disturbed area within 2 to 6 months (Robinson 1979). Stream flow would be maintained during construction by trenching and culverting.

In general, most of the aquatic species would be able to tolerate short-term increases in sediment as a result of trenching. No critical spawning or nursery areas are known to occur in the immediate vicinity of the crossings. Five of the streams (Sheep, West Cottonwood, Middle Cottonwood, East Cottonwood, and Dry creeks) contain brook trout, which is a fall spawner. Construction is not expected to affect potential brook trout spawning in these streams, since field surveys in 1990 and 2000 indicated that the proposed crossing areas in the Cottonwood Creek drainage are often dry or contain limited flow.

Potential fuel or other petroleum product spills would not affect aquatic biota, since these activities would be restricted within a minimum of 100 feet of all perennial and intermittent streams. Refueling in upland areas would be bermed and inspected to identify any leaks and spills.

Water withdrawal from the Sweetwater River (total of 6.4 acre-feet) for hydrostatic testing and directional drilling would result in a temporary depletion. This slight flow reduction is not expected to affect aquatic communities, including two sensitive species, lake chub and mountain sucker. Hydrostatic test water would be filtered through a straw bale structure, with final discharge to the

Sweetwater River. Water quality in the discharge water would have to meet National Pollution Discharge Elimination System requirements.

Water depletions in the Platte River drainage potentially could affect habitat for threatened and endangered species in the Platte River in Nebraska (i.e., whooping crane, least tern). As required by the USFWS, a fee would be applied to minor depletions (<25 acre-feet) in the Platte River drainage, as part of mitigation for threatened and endangered species.

Impacts of pipeline operation on aquatic communities would include possible leaks or ruptures. A rupture or leak in a perennial stream could cause limited fish and macroinvertebrate mortalities in a localized area due to asphyxiation. As liquid $CO_2$ is released, it would quickly volatilize into a gas. The gas stream could reduce oxygen levels and reduce pH. It is expected that most fish would avoid the area. The duration of this impact would be short-term because of the block valve system (see Section 2.2.1.2).

Maintenance activities also would remove vegetation within the permanent 30-foot ROW. Maintenance activities near perennial streams would remove a small amount of riparian vegetation. The removal of grasses and small shrubs near the stream crossings would represent a relatively small portion of streamside cover for fish. Repairs in areas near streams could result in temporary increased erosion. Erosion control procedures, as part of the National Pollution Discharge Elimination System Pollution Prevention Plan, would be implemented as part of the project to minimize any erosion in disturbed areas.

Abandonment would involve leaving the pipeline in place after the project is terminated; therefore, no new disturbance or impacts would occur for aquatic biota and their habitat.

## 4.8 Land Use and Recreation

Approximately 53.2 miles of the proposed route (MP 112.4 to MP 165.6) would be constructed in the BLM Lander Field Office Area. Approximately 27.7 miles (52 percent) of the proposed route through the Lander Field Office Area would parallel an existing pipeline corridor (MP 112.4 to MP 140.1). Approximately 2.5 miles of the proposed route would cross designated ACECs, including crucial elk winter range and the Oregon/Mormon/Pony Express Trail; however, the pipeline would be parallel to existing pipelines in these areas. The proposed route is adjacent to the Green Mountain area and crosses the Oregon/Mormon Pioneer National Historic Trail at MPs 132.0, 132.2, and 132.3. Resource Management Plan restrictions would be satisfied, and no other plan conflicts are expected.

Approximately 70.3 miles of the proposed route (MP 165.6 to MP 228.9 and the 7-mile lateral) would be constructed in the BLM's Casper Field Office Area. Approximately 16.7 miles (24 percent) of the proposed route through the Casper Field Office Area would parallel existing pipeline corridors and the general corridor along U.S. Highway 20/26. The remaining 53.6 miles (76 percent), including approximately 2.5 miles through the Salt Creek ACEC, would parallel existing utility corridors. The short-term construction impacts would be adequately mitigated. RMP restrictions would be satisfied, and no other Plan conflicts are expected.

Approximately 38.2 miles (MP 228.9 to MP 267.1) would be constructed in the BLM's Buffalo Field Office Area. The proposed pipeline route could not feasibly make use of established corridors and is considered a cross-country alignment. The short-term construction impacts from placing the proposed pipeline outside designated corridors would be adequately mitigated by the measures described in Section 2.5 and the POD.

Construction of the proposed pipeline would have no impacts on any developed recreation facilities. Scenic views from points of interest (e.g., the Split Rock Interpretive Site), historic trails (e.g., the Oregon/Mormon/Pony Express Trail), and the four WSAs (see Section 3.9) would be temporarily affected during construction until revegetation blends the colors and textures of the ROW into the surrounding landscape. Areas of high visual sensitivity for the remainder of the proposed pipeline are further discussed in the Visual Resource section (4.10). Impacts to urban and dispersed recreation resources are expected to be minimal due to the short-term population increase (210) during construction.

Portions of the proposed ROW would cross several big game hunting units in the Lander and Casper Field Office areas, including the Green Mountains, Sweetwater Rocks, Rattlesnake Range, and the area between Powder River and Midwest. The recreational enjoyment of wildlife, such as hunting, during big game hunting seasons may be temporarily affected by pipeline construction activities, depending on season and location. However, this effect would be short-term.

The operations incremental work force size (after construction) for the proposed pipeline is estimated to be one person. Following rehabilitation and revegetation of disturbed areas, there would be no impacts to land use or recreation resources during operation of the proposed pipeline.

Impacts from pipeline abandonment would be considerably less than those described for construction. Surface facilities would be removed, and the pipeline would be abandoned in place. Consequently, there would be only minor surface disturbance during abandonment.

## 4.9 Wilderness

Construction of the proposed pipeline would not impair the wilderness characteristics of the four WSAs within 10 miles of the proposed route because none of the activity would occur within either of the WSA boundaries. The BLM's interim management guidelines for these WSAs would not be violated. Construction-related impacts, which would be located outside of the WSA boundaries, would be temporary, and the disturbed areas would be reclaimed and revegetated in accordance with applicable regulations and permit requirements.

Operation of the proposed pipeline would not impair the wilderness characteristics of the four WSAs within 10 miles of the proposed route. Surface traffic along the proposed route would be limited to workers performing periodic pipeline and valve maintenance and emergency repairs to the pipeline or corrosion protection devices. The only aboveground facilities that would be located within 10 miles of the four WSAs are block valves at MP 132.1 (approximately 1 mile southeast of the Split Rock WSA) and at MP 149.9 (approximately 8 miles northeast of the Miller Springs WSA). These facilities would not impair the WSAs' suitability for preservation as wilderness.

Impacts from pipeline abandonment would be similar in nature to those described for construction, although at project termination only surface facilities would be removed, and the pipeline would be abandoned in place. Consequently, there would be far less surface disturbance during abandonment. Impacts would be temporary and would not impair the suitability of the WSA for preservation as wilderness. All disturbed areas would be rehabilitated and reshaped to blend into adjoining areas to the extent possible.

## 4.10 Visual Resources and Noise

### 4.10.1 Visual Resources

Potential visual effects of the proposed pipeline would result from landform changes that contrast with the existing visual environment. Visual contrast results from project-generated modifications to form, line, color or texture of existing land forms, water bodies, vegetation, or structures. Examples of possible pipeline-related visual contrasts could include sharp, geometric cut/fill areas across natural ridge lines, surface facilities located in a sensitive viewshed as seen from an important tourist overlook point, or unreclaimed ROW exposing pale, beige soil through a previously undisturbed, dark green juniper woodland.

Pipelines, because they are largely below ground when completed, often produce their greatest visual effects during the construction period when the visual environment is first altered from the existing condition. If the construction scars are effectively revegetated, these effects may be short-

term in nature. Longer lasting effects may result from aboveground facilities such as surface facilities and valves, or from permanent changes to terrain or vegetative patterns. For purposes of this analysis, two timeframes were evaluated: the period between completion of construction and successful revegetation of the disturbed areas with grasses (short-term), and the period following to the end of the productive life of the project (long-term). The actual construction activity was only minimally evaluated because it would typically last for 2 to 4 weeks at any particular location.

Contrast ratings of the proposed project were conducted using the principles of the VRM contrast rating process (BLM 1986c). The most critical viewpoints, designated key observation points (KOPs) by the VRM system, were considered to be major highway crossings at U.S. 287, U.S. 20/26, and I-25 plus a secondary highway, State Highway 50, where it crosses the Hartzog Draw Unit oil field. In addition, more remote KOPs were selected to evaluate the two VRM Class II areas at crossings of the Green Mountains and the Granite Mountains.

From the short-term perspective, construction of the proposed pipeline would result in moderate to strong color and line contrasts as a result of clearing vegetation in a distinct band along the pipeline alignment. The degree of contrast would vary somewhat, depending on the color of soil laid bare and the sharpness of the edge of the cleared strip. The effects would be similar at all three major highway crossings, although the contrast would be slightly less at U.S. 287, where the Frontier Pipeline already creates a moderately to weakly defined linear feature.

There would also be an element of structural contrast introduced by aboveground block values adjacent to I-25 and scraper receipt/launch traps adjacent to U.S. 20/26. The industrial appearance would be out of character with the surrounding landscape, but the visual effect would depend on paint color selected and the degree of screening afforded by vegetation or terrain.

The visual contrast at the major highway crossings would likely meet the VRM objectives for Class III areas near the major highway KOPs. The sharp linear feature and color contrast between soil and vegetation would attract attention but would not dominate the view of the casual observer because of the modest scale of disturbance in the vast Wyoming landscape. The effects would be mitigated somewhat where topography drops off away from the road. Visual effects would also be slightly less at I-25 because the ROW is nearly perpendicular to traffic flow, making the visual contrast visible for a shorter time to motorists than at U.S. 20/26 and U.S. 287 where the ROW would intersect diagonally.

The visual contrast would gradually recede over time, as reclamation plantings begin to grow and finally mature, greatly reducing color contrast and softening the sharp linear edges of the cleared construction disturbance strip. Over the long term, after successful revegetation, the pipeline would meet the VRM Class III management objectives at the major highway crossings.

Through the VRM Class II areas, visual management objectives are more stringent. At the Green Mountains crossing, the visual contrast noted above would be intensified during construction by side-slope cut and fill that would noticeably alter the natural landform and add vertical landform and vertical elements to the band of soil stripped of vegetation. In the very short term, this would "attract the attention of the casual observer" in opposition to the dictates of the Class II management objective. Over the long term, however, the land form contrast would be eliminated as reclamation activities would refill the sideslope cut and return the land to near its original condition. The color and line contrast would be reduced with successful revegetation. The visual effects of disturbing large boulders would be eliminated by applying an artificial desert varnish (e.g., Permeon) to the surface of the rocks. The rock staining would be used in two areas adjacent to the Green Mountain Road (MP 118.0 to 120.9 and MP 121.1 to 122.0). Consequently, the pipeline would not continue to attract attention, and once vegetation is successfully reestablished, the VRM Class II objective of retaining landscape character would be achieved.

The situation at the Granite Mountains Class II area is somewhat different. The terrain is relatively flat so there would be no landform modification. Also, the Frontier Pipeline is an existing linear feature in the landscape. In the short term, the new, raw cut would exceed the Class II objectives. Over the long term however, successful revegetation would substantially reduce the visual contrast, and the proposed pipeline would create a minor expansion of existing visual contrast that would not attract attention. The corridor through the Granite Mountains benefits from being surrounded by more scenic and dramatic landscape features that serve to distract viewers from the valley bottom pipeline route. Once successful revegetation occurs, the VRM Class II objectives would be satisfied.

The VRM Class I areas at the Oregon/Mormon/Pony Express Trail and Bozeman Trail crossings are special cases. Class I objectives have very strict standards that prohibit all but very minor changes to the characteristic landscape that would not attract attention. Project-committed protection measures for these trail crossings are listed in Sections 2.5, 4.14, and in the POD.

The area proposed for the pipe yard is located on private land that has previously been used as a pipe yard. Due to the existing disturbance at this site, it is unlikely to be visually sensitive.

Operation and abandonment of the pipeline would result in virtually no change to the long-term visual effects because: 1) the aboveground facilities would be limited to four sites (1 acre each); and 2) the pipeline would be abandoned in place. There would be a minor reduction in visual contrast from removal of aboveground valves, scraper traps, etc.

### 4.10.2 Noise

As a result of the distance (0.5 mile) between the ROW one measurement facilities and the nearest noise receptor (private residence), no construction or operation-related noise impacts would be anticipated as a result of the project. Noise resulting from construction activities would be short-term (2 to 3 weeks) in duration and limited to daylight hours.

## 4.11 Socioeconomics

This section evaluates the beneficial and adverse effects of the proposed project within the context of social and economic changes in the study area. Calculations of impacts were based on known characteristics of the study area, supported by professional planning standards and empirical data from other projects studied in Wyoming.

Two spreads of up to a total of 210 workers would construct Phase I of the proposed 155-mile $CO_2$ pipeline. Workers needed for construction of the water crossings are included in the spread totals presented in Table 2-2. The construction period is projected to begin in August 2000 and be completed by late January 2002.

Local and non-local labor forces have been estimated for the pipeline spread based on skilled and unskilled labor availability, primarily from the Casper area, since the temporary pipeline headquarters would be located in Casper, which is central to the work location. Work force availability in Rawlins, Gillette, and Riverton also may contribute to the percentage of local workers. A local worker is identified as a worker who is able to commute to and from his permanent place of residence on a daily basis. A non-local worker is identified as a worker who has moved into the construction area for the duration of the project. The Wyoming labor force has a fairly large contract construction employment sector and has some trained and experienced pipeline workers in counties from which the labor force would be drawn particularly in Natrona, Campbell, and Fremont counties (Lotsenhauser 1990). The labor force is assumed to be composed of 75 percent (157) non-local labor during peak construction. Since there are no anticipated shifts in employment among sectors, and the construction period is of short duration (6 to 7 months), employment impacts would be considered beneficial to the local area economies.

Because of the short duration of pipeline construction, it is assumed that only a small percentage of the non-local work force would bring their families. Based on information from the 1979 Pipeline Construction Workers and Community Impact Surveys Reports, only 0.3 dependents per worker are estimated (Mountain West, Inc. 1979). Using these criteria, the 157 non-local workers would bring an estimated 47 dependents, for a total temporary increase in population of 204 people. Adverse social and economic impacts of pipeline construction are considered minimal because of

the quick pace and short duration of the construction schedule. The number of workers would be very small relative to the regional population. The largest population increase that could occur would be no greater than 0.32 percent in the Casper area.

The estimated labor cost for contract construction in 2001 dollars is $3.16 million. This cost would be spread over the 4-month construction period and includes salaries for contract supervisors' wages, benefits and overtime for skilled and unskilled labor, and rental on labor force trade equipment. The average monthly payroll is estimated at $791,700. A portion of this total income would be spent in the area and would result in increased sales tax receipts throughout the area. Local spending is estimated to be $197,917 per month.

Increased spending in the local areas would result in increased retail sales to merchants, as well as increased sales tax to local taxing jurisdictions. The overall impact of this local spending and tax generation would be positive.

In addition to construction worker local expenditures, other income generated by pipeline construction would include local material purchases paid by contractor(s) and other support personnel. It is assumed that the contractor would locally purchase as many materials as possible. These expenditures would include tools, fuel, oil, parts and repairs. Smaller communities would benefit from fuel sales and repair expenditures.

The proposed pipeline construction work force would not be large enough to place a permanent demand on local services such as police, medical facilities, fire or educational services; nor would the construction population cause any detrimental effects to community social well-being due to the short time frame of the construction period. No significant impact on the existing infrastructure would occur.

Because construction would be short in duration, housing demand would be of a temporary nature. It is generally accepted that pipeline workers prefer to stay in accommodations closest to the pipeline that offer adequate housing and amenities. Based on typical pipeline construction, it is assumed that housing for the non-local pipeline work force would be divided among rental units, hotels/motels, RVs, and other accommodations. Assuming that 25 percent of the non-local workers would reside in rental units, 20 rental units would be required throughout the study area. Under the assumption that 45 percent of workers would reside in motel/hotel units and 30 percent in RVs, 35 motel/hotel units and 47 RV sites would be required throughout the study area. The majority of workers would share a motel room or apartment. Welders are most likely to bring their own RVs to the area (Mountain West, Inc. 1979).

A potential effect of the pipeline construction work force on housing would be competition with travelers and recreationists for temporary accommodations. Since peak construction would not occur during peak tourist season, travelers seeking accommodations are not anticipated to be impacted. However, in some areas, where hunting activity is typically high, competition for accommodations with pipeline construction workers may be increased, as construction is scheduled to occur during big game hunting seasons. Apartment rental units would be most available in larger cities such as Rawlins or Casper. Adequate accommodations exist throughout the study area, within commuting distance of the pipeline.

The permanent work force for pipeline operation would be an incremental increase of one full time position, probably stationed at Casper. Pipeline maintenance would be done with local contractors specializing in this type of work. The annual cost of pipeline operation and maintenance is expected to range from $100,000 to over $1.5 million in 2001 dollars.

The estimated project-related assessed valuation for the first year of operations is compared with 1998 county-wide assessed valuation in Table 4-7. Each county and school district would benefit from the increased tax base. Tax revenues for the first year are estimated in Table 4-7, based on a 1998 average county-wide tax rate. The largest increase in the tax base attributed to the pipeline and facilities would occur in Natrona County.

**Table 4-7**
**Contribution to Tax Base for the Proposed PSC $CO_2$ Pipeline**

| County | Miles of Pipeline | 1998 Tax Rate[1,3] (mills) | Estimated Valuation of Pipeline and Facilities[2,4] (Thousands $) | 1998 Assessed Valuation[3] (Thousands $) | Pipeline Percent of Total County-wide Assessed Valuation[4] | Estimated Property Tax Receipts from Pipeline and Facilities (Thousands $)[4] |
|---|---|---|---|---|---|---|
| Fremont | 17.77 | 76.844 | 437 | 288,983 | 0.15 | 33,600 |
| Natrona | 105.48 | 72.926 | 2,300 | 416,733 | 0.55 | 167,000 |
| Johnson | 34.86 | 67.009 | 264.5 | 79,674 | 0.33 | 17,725 |
| Campbell | 3.39 | 60.419 | 69 | 1,495,260 | <0.01 | 4,170 |
| Total | 161.5 | | 3,070.5 | 2,280,650 | | |

[1]Estimated county -wide tax rate, may not reflect actual tax rate applied to pipeline.
[2]Pipeline mileage percent of total cost by county.
[3] Source: Wyoming Department of Revenue (1998b).
[4] Source: Petro Source (2000).

Abandonment of the pipeline and facilities would decrease the tax bases of those counties through which it passes. At the time of abandonment, tax receipts in each county would be reduced from the pipeline's in-service date due to depreciation. Total decreases in tax receipts cannot be quantified at this time.

## 4.12 Environmental Justice

The estimates on minority population percentages and median household income for the three communities of Powder River, Edgerton, and Midwest as described in Section 3.12.2, indicate there are no minority and/or low-income populations living within 5 miles of the project or in what has been defined as the "affected area." Therefore, no environmental justice issues concerning minority and/or low-income populations are expected to occur as a result of the construction and operation of the proposed PSC pipeline.

## 4.13 Transportation

Construction of the proposed pipeline would generate traffic increases from rail and truck transport of pipe and construction materials, and from commuting by construction workers. Load limit restrictions on roads, bridges, and highways would be observed at all times to prevent surface and structural damage. Oversize loads would comply with special permit requirements of the Wyoming Department of Transportation and county highway departments.

The pipe and most construction material would be shipped by rail to Casper where the construction headquarters and a material staging yard would be established for the pipeline project. The rail activity would not be great enough to adversely affect other rail traffic or highway traffic on intersecting roads to any measurable degree. Temporary increased traffic would occur on Highway 20/26, I-25, and the heavy-duty access roads due to the transport of pipe and materials to the ROW during the 6-month construction period.

The routes used would change as construction progressed along the route, but existing traffic levels on all major highways are sufficiently low that this incremental increase would have no appreciable effect on levels of service or travel times on area highways. Traffic generated during off-peak hours would be fewer than 20 vehicles per hour, most of which would be heavy trucks. Effects on traffic flows would be minor, although the increase in heavy trucks could create some queuing delays on hilly or curved road segments where passing is restricted.

Effects of traffic increases on county road traffic are difficult to quantify. Generally, existing traffic levels are very low on such roads; therefore, the overall effects on traffic flow would be minor. An individual motorist using one of these roads regularly may experience delays, but even individual effects would be short term, lasting no more than a few weeks on any particular road.

Project-related effects on traffic accidents would be expected to be minor. The total number of accidents in the project area could increase approximately in proportion to the increase in travel. There is no reason to believe, however, that the vehicle accident probability, commonly expressed

as the number of accidents per million vehicle miles, would increase beyond state average levels (PIC 1988b). Increased local traffic congestion during the construction period would tend to increase accident probability above the current low levels, but an increase in the proportion of professional bus and truck drivers in overall traffic flow would tend to counter this effect (PIC 1988b).

Increased heavy truck traffic would tend to accelerate deterioration of road surfaces. This effect would be minimal on state and U.S. highways built to accommodate such traffic. Maintenance requirements on unpaved county roads may be notably increased during the brief periods of heavy usage for access to particular segments of the pipeline route. The degree of increase in maintenance needed would depend on weather conditions and the quality of the existing roadway.

Traffic delays on roads and highways intersecting the pipeline route would be minimal. All major highway crossings would be bored; therefore, traffic interruptions would be limited to equipment and personnel crossing the road, which would be controlled and protected by flagmen, signage, and other standard construction safety procedures. For minor roads that would be trenched, alternate access would be maintained by temporary measures such that delays would be limited to no more than 10 minutes per hour.

Where the pipeline would cross existing pipelines, powerlines, or communication links, construction techniques would be designed to prevent disruption of existing services.

Operation of the proposed pipeline would have no measurable effect on transportation in the project vicinity. Long-term traffic increases would be negligible. Occasional maintenance or repair requirements would cause activity similar to construction but only for very brief periods and generally on a much smaller scale than those that would be experienced during the construction period.

Abandonment of the pipeline would result in only minor transportation effects because most of the facility would be abandoned in place.

## 4.14 Cultural Resources/Native American Concerns

### 4.14.1 Cultural Resources

The NHPA and 36 CFR 800 require consideration of all cultural resources that may be affected by direct surface-disturbing activities and indirect effects from such operations. A number of archaeological investigations were conducted for the proposed pipeline to identify and evaluate

cultural resources. These included pedestrian surveys, testing, on-site inspections, formulation of a project treatment plan, and various historic studies. Where possible, significant sites would be avoided. Mitigation of adverse effects was required in cases where avoidance is not possible.

The cultural resources inventories conducted for the proposed pipeline identified 29 prehistoric and historic sites along the proposed pipeline ROW, including 5 trail crossings, which are eligible for nomination to the NRHP. Potential impacts to these cultural resources would primarily result from construction-related activities. Impacts would be considered significant if any information were lost that impeded efforts to reconstruct the prehistory or history of the region.

Only those sites that are eligible to the NRHP under the criteria for eligibility defined in 36 CFR 60.4, or those sites with the potential to preserve significant cultural information or heritage values, require avoidance, mitigation, or special consideration once an area has been inventoried. Of the 29 prehistoric and historic sites eligible to the NRHP, 20 of these would not have significant cultural deposits impacted by construction of the proposed PSC pipeline. Site-specific instructions for six of the sites would avoid or minimize impacts associated with construction activities. Data recovery was conducted at three of the prehistoric sites (48NA1079, 48NA1086, and 48CA2195) where avoidance was not possible. The eligible sites and their management recommendations are presented in Table 4-8.

Five historic properties, the Oregon/Mormon/Pony Express, Bridger, and Bozeman Trails, Morton Ranch, and North-South Railroad grade, are included on the list of NRHP-eligible sites. Mitigation of adverse effects to these properties would consist primarily of limiting construction activities to previously disturbed areas, restricting the amount of area used during construction, barring construction traffic from driving on trails or through the Ranch (other than on the ROW), monitoring construction by a qualified archaeologist, use of a special seed mixture during reclamation to promote rapid revegetation, and replacement of trail markers if they are removed during construction.

The potential for undiscovered cultural resource sites, such as deeply or shallowly buried cultural materials, does exist despite the substantial amount of previous archaeological investigations. Part of the mitigation procedures to be undertaken in conjunction with the proposed pipeline project includes an OTI of the entire 155-mile-long proposed pipeline and 7-mile lateral based on the high potential to encounter buried cultural deposits. The OTI is defined as: Inspection of the trench after it has been dug, but before pipe has been laid in the trench. If cultural resources were discovered in the trench wall, the location would be mapped, samples collected, and a datum staked outside the ROW to assist in relocating the site. Pipe installation and covering would proceed through the area once documentation is complete. The OTI would be conducted in

## Table 4-8
## Field Recommendations for Eligible Sites Located Along the Proposed PSC $CO_2$ Pipeline Route

| Site Number | Site Type | Field Recommendations |
|---|---|---|
| **Lander Field Office** | | |
| 48FR736 | Oregon Trail/Mormon Trail/Pony Express | Oregon Trail/Mormon Trail/Pony Express. Complete site forms with reference to overviews. Stay as close to, or within Frontier easement, as possible; brush beat ROW at crossing; special seed mixture to promote revegetation; reset existing trail signs; archaelolgical monitor. |
| 48FR1499 | Open camp | No impacts to significant cultural deposits. |
| 48FR1475 | Open Camp | No impacts to significant cultural deposits. |
| 48NA257 | Open camp/lithic procurement | No impact to significant cultural deposits. |
| 48NA359 | Lithic scatter/stone circle | ROW will not impact site. |
| 48NA728 | Open camp | ROW will not impact site. |
| 48NA884 | Open camp | No impacts to significant cultural deposits. |
| 48NA1060 | Open camp | Archaeological monitor during topsoil stripping; if features are discovered, work would be halted, BLM Archaeologist notified, and features treated in accordance with the project's PA (Appendix A). |
| 48NA1067 | Open camp/stone circles | No impacts to significant cultural deposits. |
| **Casper Field Office** | | |
| 48NA207 | Bridger Trail | Restrict ROW blading within 200 feet of trail; brush beat ROW at crossing; mark ROW width; archaeological monitor. |
| 48NA226 | Stone circles/open camp | No impact to significant cultural deposits |
| 48NA242 | North-south railroad grade | ROW will not impact site |
| 48NA1019 | Lithic scatter/historic trash scatter | No impact to significant cultural deposits |
| 48NA1061 | Stone feature, open camp | No impact to significant cultural deposits |
| 48NA1079 | Open camp | Data recovery to mitigate impacts[1] |
| 48NA1080 | Open camp | No impact to significant cultural deposits |
| 48NA1083 | Open camp | Limit ROW to 15 meters on west side; marking this limit will avoid significant cultural material |
| 48NA1086 | Open camp | Data recovery to mitigate impacts[1] |
| 48NA1090 | Morton Ranch historic site | Moving pipeline to east side of an existing pipeline will avoid structures |
| **Buffalo Field Office** | | |
| 48CA2195 | Open camp | Data recovery to mitigate impacts[1] |
| 48JO134 | Bozeman Trail | Minimal blading of ROW through valley; narrow and brush beat the ROW at the crossing; limit vehicular traffic in the valley; construct in dry season, preferably August or September; on-site monitor; equipment matting at crossing; harrow the soil in preparation for seeding; no pipeline markers within the viewshed. |
| 48JO938 | Open camp/historic trash | No impact to significant cultural deposits; alternative alignment avoided the site. |
| 48JO946 | Open camp | No impact to significant cultural deposits |
| 48JO947 | Open camp | No impacts to significant cultural deposits. |
| 48JO950 | Lithic scatter | No impacts to significant cultural deposits. |
| 48JO954 | Open camp | No impact to significant cultural deposits |
| 48JO958 | Open camp | No impact to significant cultural deposits |
| 48JO959 | Open camp | No impact to significant cultural deposits |
| 48JO963 | Open camp | ROW will not impact site |

[1]Data recovery was conducted at these sites by AS-WWC (Darlington et al. 1995).
Source: Bower et al. (1991).

accordance with the provisions of the PA (Appendix A) and agreed upon by the BLM, SHPO, and Petro Source.

If human remains were discovered during project construction, construction would be halted within 328 feet of the discovery, and the find reported to the BLM Authorized Officer. The discovery would be evaluated and treated in accordance with the provisions of the project's PA. Work would not be reinitiated in the vicinity of the discovery until authorized by the BLM.

Operation and abandonment of the proposed pipeline would not result in impacts to cultural resources along the proposed pipeline route. These activities would not involve any additional land disturbance; therefore, no additional impacts to cultural resources along the proposed pipeline route are anticipated.

### 4.14.2 Native American Consultation

Traditional Cultural Properties include sites or areas of concern to Native American groups either for heritage or religious reasons. They may include burials or locations where medicinal and subsistence resources are gathered. At this time, no Traditional Cultural Properties have been identified in the project area. If Traditional Cultural Properties were identified in or adjacent to the construction ROW, the BLM, in consultation with a tribal representative, would determine an appropriate course of action.

If human remains were discovered during project construction, construction would be halted within 328 feet (100 meters) of the discovery, and the BLM authorized officer notified. The discovery would be evaluated by the BLM authorized officer in accordance with the provisions of the project's PA. Treatment of any human remains located on federal land would be handled in accordance with the Native American Graves Protection and Repatriation Act; human remains found on private land would be handled according to the provisions of appropriate state laws and the Programmatic Agreement for this project. Work would not be reinitiated in the vicinity of the discovery until authorized by the BLM.

## 4.15 No Action Alternative

Under the No Action Alternative, the proposed PSC $CO_2$ Pipeline would not be constructed. As a result, the natural and human resource impacts and benefits identified under the Proposed Action would not occur. Without the development of the $CO_2$ pipeline, enhanced oil recovery of the Salt Creek, Sussex, and Hartzog Draw oil fields would not occur, thereby reducing the amount of oil recovered and transported to markets. In addition, $CO_2$ currently being vented at the LaBarge Gas Plant would continue to be emitted to the atmosphere rather than be used by the PSC Project.

Tax revenues would not be received by the State of Wyoming or counties crossed by the pipeline. In addition, the construction and operation work force payroll would not be available for purchase of local goods and services. Royalties and payments to the federal and state governments for recovered oil would not be realized.

# 5.0 RESIDUAL AND CUMULATIVE IMPACTS

## 5.1 Commitment of Resources

Some resources may be adversely affected for the short term (less than 3 to 5 years), i.e., during and immediately following construction, and others may be adversely affected for the long term. Long-term (greater than 3 to 5 years) is defined as the 30- to 35-year operational life of the project or beyond. Many of the impacts associated with project construction would cease to be adverse after the ROW rehabilitation is completed. No significant decrease in resource productivity would be expected as a result of construction-related impacts. Operation of the enhanced oil recovery program at the Hartzog Draw, Salt Creek, and Sussex oil fields would enable up to 20 million barrels of additional oil to be produced; recovered oil would be consumed and lost for future use, representing an irreversible impact. Table 5-1 summarizes the long-term and short-term effects of the proposed project and indicates whether a resource would be irreversibly or irretrievably affected.

Construction and operation of the proposed pipeline could irreversibly or irretrievably commit certain environmental or energy resources. An irreversible commitment of resources relates to the loss of future options for those resources; an irreversible impact applies primarily to the effect on the use of nonrenewable resources, such as minerals. The irretrievable commitment of resources means a loss of production, harvest, or use of natural resources for a finite period. Potential irreversible and irretrievable resource commitments for the proposed PSC Project could include paleontological and cultural resources.

## 5.2 Residual Impacts

The residual impacts of the proposed project are expected to be minimal and primarily be short-term, assuming the applicable environmental protection measures (Section 2.5 and POD) are effectively applied. Some of the residual adverse impacts associated with the pipeline are considered unavoidable because of the nature of pipeline construction. The linear ROWs cannot, in most cases, avoid crossing rivers and streams, and the pipeline cannot be buried without trenching. Most of these impacts are short-term; however, some small surface areas are required during the life of the project for support structures. These structures are required for the safe operation of the system (e.g., block valves).

Unavoidable short-term impacts from the project would include land surface disturbance resulting in vegetation cover loss and, consequently, loss of wildlife and livestock forage and an increased potential for erosion. Wildlife also would be disturbed along the pipeline route during the construction phase of the project. Short-term impacts on water quality would occur at trenched

**Table 5-1**
**Resource Commitments Identified for the Proposed PSC $CO_2$ Pipeline Project**

| Resource | Impacts | | Commitment of Resources | |
|---|---|---|---|---|
| | Short-Term | Long-Term | Irreversible | Irretrievable |
| Air Quality | x | | | |
| Geology and Soils | x[1] | | | |
| Minerals and Paleontological Resources | x | x[4] | x[4] | x[4] |
| Water Resources | x[2] | | | |
| Vegetation and Agriculture | x[3] | x[3] | | |
| Wildlife | x | | | |
| Aquatic Resources | x | | | |
| Land Use and Recreation | x | | | |
| Wilderness | None | | | |
| Visual Resources and Noise | x | x[5] | | |
| Socioeconomics | x | x | | |
| Transportation | x | | | |
| Cultural Resources | x | x[4] | x[4] | x[4] |

[1]Accelerated erosion would occur during construction and continue until erosion control measures were implemented; understory vegetation is expected to return to near preconstruction conditions within 5 years.

[2]Increased sedimentation would occur downstream of perennial stream crossings during construction. Near preconstruction conditions would be reestablished upon completion of the crossing and stabilization of any disturbed banks.

[3]Vegetation community structure and forage production would be lost on disturbed land for 2 to 5 growing seasons until grasses and forbs were reestablished; reestablishment of shrubs may take 10 to 30 years and trees would not be allowed to regrow in the ROW. This would result in long-term impacts to shrub and woody vegetation.

[4]There would be some gain in information for both cultural and paleontological resources as a result of the project; however, there could also be some long-term inadvertent irreversible and irretrievable commitment of resources.

[5]Visual effects of block valves/metering stations would be of long-term duration, but visual objectives would still be met at these locations.

pipeline stream crossings. Although grasses and forbs would become reestablished in the ROW within 5 years, shrubs may take up to 30 years to become established in the construction ROW. Trees greater than 10 inches in diameter would not be allowed to grow in the ROW. This would result in long-term effects to shrubs and woody species.

Minor short-term air quality degradation is expected from fugitive dust and construction equipment emissions along the pipeline ROW. Most traffic effects of the proposed project would be unavoidable, including increased traffic, the potential for increased accidents, and increased road maintenance requirements.

Long- and short-term impacts to visual resources are expected due to construction-related activities and the visibility of the reclaimed pipeline alignment. Short-term visual contrast in excess of the VRM Class II management objectives would be unavoidable. Minor visual contrast caused by noticeably different vegetation patterns and textures in reclaimed areas would be an unavoidable effect. Similar impacts to cultural resources (e.g., historic trails) would result from construction. Potential long-term impacts to cultural sites should be minor and partially offset by the gain in information as a result of planned project-committed protection measures.

Minor adverse impacts to minerals would be the preclusion of small areas from mining. The principal impact to mineral resources would be the positive impact on the enhanced recovery of oil in the Sussex, Salt Creek, and Hartzog Draw Unit well fields. Overall, socioeconomic impacts are also expected to be positive.

## 5.3 Cumulative Impacts

Cumulative impact is defined as “the impact on the environment which results from the incremental impact of the action when added to other past, present, and reasonably foreseeable future actions regardless of what agency (federal or non-federal) or person undertakes such other actions. Cumulative impacts can result from individually minor but collectively significant actions taking place over a period of time” (40 CFR Part 1508.7). Where impacts are not fully mitigated or compensated, cumulative impacts can result.

Principal past actions that were considered in the evaluation of the cumulative impacts are those that have affected similar resources and for which the effect is still residual in the environment. For example, land disturbing projects that have adversely affected productivity for wildlife or livestock must be considered in the cumulative impact evaluation, if reclamation or off-site habitat enhancement have not compensated for that lost productivity.

Past actions in the vicinity of the pipeline that may have affected resources for which the effect is still residual include oil and gas development in the Salt Creek ACEC and the Sussex and Hartzog Draw Unit well fields, and existing pipelines that are parallel or intersect the Proposed Action. The most common residual cumulative impacts would be to vegetation productivity, visual resources, and any irreversible impacts to resources such as cultural and paleontological sites. Because the proposed pipeline would be constructed to the extent practical within existing utility ROWs and/or corridors, or in previously disturbed areas, cumulative impacts would be kept to a minimum. In addition, construction of the pipeline within the Salt Creek ACEC is not expected to result in any additional impacts to the managed area.

Future cumulative actions that are associated with the PSC Project are EOR in the Salt Creek, Sussex, and Hartzog Draw oil fields. As discussed in Section 1.7.1, Interrelated Projects, the addition of the $CO_2$ injection process would require construction of the following facilities in each field: above-ground pipeline (2- to 6-inch diameter) connection to the PSC pipeline; buried injection lines (2- to 6-inch diameter steel); buried gathering lines (6-inch steel for water and 6-inch steel for gas); buried return gathering line (10- to 20-inch fiberglass for $CO_2$ gas); $CO_2$ distribution header (approximately 40 feet x 40 feet); compressor facilities; and a $CO_2$ processing plant. Construction activities would be confined to previously disturbed land that is used for oil development. Operation activities would involve the production of oil from the $CO_2$ injection process. No new roads or maintenance activities would be required for the EOR process. Waste products resulting from the EOR activities would include glycol, heavier hydrocarbons, and amines. Nelms (2000) estimated that approximately 10 barrels/year of glycol, 10 barrels/year of amines, and 20 barrels/year of hydrocarbons would be produced by EOR at Westport's wells, which would require disposal at approved sites. Water filters, which would be replaced on a weekly basis, also would require disposal. These estimates are considered representative of the production of waste products for other operators who utilize EOR.

Initially, three operators may initiate EOR activities at their wells (ExxonMobil in the Hartzog Draw field, Howell in the Salt Creek field, and Westport in the Sussex field). After 2 or 3 years, other operators with active wells may include the EOR process as part of their operation. Discussions with Westport (Nelms 2000) and Howell (Geiger 2000) indicated that the area of disturbance would be approximately 25 and 15 acres, respectively. The majority of the disturbance area (10 acres) is associated with the $CO_2$ processing plant and compressor facilities. Westport would use EOR at 30 existing wells. Howell plans to use $CO_2$ injection at 9 existing wells for a 1- to 2-year pilot study. Depending upon the level of oil recovery, the EOR process would be used at additional wells in the future. The estimated disturbance area associated with ExxonMobil's implementation of the EOR process is expected to be in a similar range (15 to 25 acres).

Potential impacts on environmental resources resulting from the use of $CO_2$ injection in the EOR activities are listed in Table 5-2. No impacts are anticipated for cultural resources, surface and groundwater resources, land use, wetlands, recreation, wilderness, and threatened and endangered species. Additional NEPA analysis would be required for each operator, as part of the permit process.

A potential future project that was analyzed in the previous EA (BLM 1990) was the development of coal bed methane in the Powder River Basin. Although this is a major activity in the Powder River Basin, development would not extend into the project area for the proposed PSC pipeline.

**Table 5-2**
**Potential Impacts of Using $CO_2$ Injection in EOR Activities**

| Environmental Resource | Impacts |
|---|---|
| Air Quality | • Beneficial effect resulting from the use of $CO_2$, which would reduce $CO_2$ emissions at the ExxonMobil La Barge Facility in southwest Wyoming<br>• Temporary increase in fugitive dust resulting from construction equipment and trenching activities<br>• Potential increased emissions in nitrogen oxide, carbon monoxide, carbon dioxide, and hydrogen sulfide due to operation of the $CO_2$ processing plant |
| Soils | • Temporary disturbance to soils in the trenched areas for the injection and gathering lines<br>• Surface disturbance to soils in the locations for the $CO_2$ distribution header and the $CO_2$ processing plant |
| Geology | • Recovery and production of additional oil resulting from the increased effectiveness of $CO_2$ injection |
| Visual Resources | • Addition of above-ground facilities for the $CO_2$ connection pipeline, $CO_2$ distribution header, and the $CO_2$ processing plant to an existing oil field operation |
| Noise | • Noise increases for the $CO_2$ distribution header and the $CO_2$ processing plant; no sensitive receptors are located within the existing oil field |
| Vegetation | • Temporary disturbance to grass species due to trenching activities; long-term impacts on shrubs<br>• Increased potential for noxious weed infestations |
| Wildlife | • Temporary disturbance to burrowing animals in the trenched areas<br>• Temporary displacement of birds and other mobile wildlife species due to the increased noise and human activity during construction |
| Hazardous Materials/Wastes | • Generation of glycol, heavier hydrocarbons, and amines for each operation, which would require disposal at approved sites |
| Socioeconomics | • Increased revenues for recovery of additional oil |

# 6.0 CONSULTATION AND COORDINATION

## 6.1 Scoping Process

The CEQ regulations require an "early and open process for determining the scope of issues to be addressed and for identifying the significant issues related to a proposed action" (40 CFR 1501.7). The BLM conducted a direct mail campaign to 124 addresses used for previous, related environmental analyses in the project area. The mailing list included landowners, business groups, recreation and environmental groups, as well as other interested members of the public from central and southwestern Wyoming. The scoping announcement provided a brief description of the project, a summary of the scoping process, and a form to be used for submittal of written comments regarding scoping issues. In addition, a press release announcing the project was issued on March 8, 2000, in local newspapers, radio, and television stations. Responses to the scoping notice were accepted through March 31, 2000.

## 6.2 Results of the Scoping Process

During the public review period, the BLM received responses to the notification from government agencies and individuals. Thirteen comment letters were received, which included six from the public and seven from federal, state, and county agencies. No issues were raised, but the agencies identified information on threatened and endangered species, wildlife, noxious weeds, and historic trails. This information was incorporated into the EA as appropriate.

## 6.3 Coordination

The following agencies, groups, and businesses have provided input and/or will receive copies of the Environmental Assessment:

<u>Federal Agencies</u>

Advisory Council on Historic Preservation
Bureau of Indian Affairs
Bureau of Reclamation
Department of Health and Human Services
Environmental Protection Agency
Federal Energy Regulatory Commission
Federal Highway Administration
Forest Service
National Park Service

Soil Conservation Service
U. S. Army Corps of Engineers
U.S. Fish and Wildlife Service

Wyoming State Agencies

Department of Administration and Fiscal Control
Department of Environmental Quality
Department of Geography and Recreation, University of Wyoming
Economic Development and Stabilization Board
Employment Security Commission
Enhanced Oil Recovery Institute
Game and Fish Department
Geological Survey
Governor's Planning Office
Highway Department
Natural Heritage Program
Oil and Gas Conservation Commission
State Engineer's Office
State Historical Preservation Office

County Agencies

Campbell County
Fremont County
Johnson County
Natrona County
Natrona County Weed District

Other

Campbell County Economic Development Corporation
Nature Conservancy (Wyoming Natural Diversity Data Base)
Petroleum Association of Wyoming
Wyoming Outdoor Council
Wyoming Association of Professional Archaeologists

## 6.4 Team Organization

Lead Agency – Bureau of Land Management

Casper Field Office
Buffalo Field Office
Lander Field Office

## 6.5 EA Preparers

The EA was prepared under a third-party contract arrangement with ENSR Consulting and Engineering of Fort Collins, Colorado. The EA Core Team and Technical Specialists who prepared the document are listed in Table 6-1.

## Table 6-1
## List of Preparers for the PSC $CO_2$ Pipeline EA

| Name | EA Responsibility |
|---|---|
| **BLM Project Team** | |
| Glen Nebeker (Casper) | Project Coordinator |
| Bill Bartlett (Lander) | Lander Field Office Coordinator, Realty |
| Celia Skillman (Casper) | Lead Realty |
| John Kolnik (Buffalo) | Realty |
| Gary Long (Lander) | Visual, Recreation, Wilderness |
| Mike Brogan (Casper) | Water Resources |
| Greg Bautz (Lander) | Water Resources, Soils, Noxious Weeds |
| Sue Oberlie (Lander) | Fisheries, Wildlife, T&E, Wetlands |
| Willie Fitzgerald (Casper) | Fisheries, Wildlife, T&E, Wetlands |
| Larry Gerard (Buffalo) | Fisheries, Wildlife, T&E, Wetlands |
| Joe Meyer (Casper) | Soils |
| Susan Caplan (WSO) | Air Quality |
| Chris Arthur (Casper) | Cultural Resources, Native American Issues |
| Craig Bromley (Lander) | Cultural Resources, Native American Issues |

| ENSR Project Team | Education and Experience | EA Responsibility |
|---|---|---|
| Valerie Randall | B.A. Urban Studies<br>22 years experience | Project Manager |
| Rollin Daggett | B.S. Zoology<br>B.S. Aquatic Biology<br>25 years experience | Project Coordination, Water Resources, Fisheries, Wilderness, Visual and Noise, T&E, Transportation |
| Debbie Eley | B.A. Economics<br>M.S. Ecology<br>6 years experience | Recreation, Land Use, Socioeconomics |
| Kim Munson | B.A. Anthropology/Archaeology<br>M.A. Anthropology<br>7 years experience | Cultural Resources, Native American Issues, Environmental Justice |
| Jon Johnson | B.S. Geology<br>3 years experience | Soils and Geology, Paleontology |
| Charles Johnson | B.S. Wildlife<br>M.S. Ecology<br>13 years | Wildlife, T & E |
| Karen Caddis-Burrell | B.S. Natural Resource Management<br>B.A. Physical Geography<br>18 years | Wetland, Weeds |
| Stu Fischbeck | B.S. Chemical Engineering<br>9 years experience | Air Quality |
| **Western Wyoming College, Archaeological Services** | | |
| Jana Pastor | M. Public Administration<br>20 years experience | Cultural Resources |

# 7.0 REFERENCES


American Conference of Governmental Industrial Hygenists. 1998. Documentation of the Threshold Limit Values and Biological Exposure Indices. Cincinnati, Ohio.

Baker, L. 2000. Fremont County Weed and Pest Control. Personal Communication with D. Richardson, ENSR, Fort Collins, Colorado. March 2, 2000.

Barnes, J. 2001. Administrator, Surface Water, Wyoming State Engineer's Office, Cheyenne, Wyoming. Personal Communication with R. Daggett, ENSR, Fort Collins, Colorado. February 12, 2001.

Basko, P. 1987. Wyoming Oil and Gas Conservation Commission. Letter to Bureau of Land Management Regarding Amoco $CO_2$ Projects. December, 1987.

Boettcher, A. J. 1972. Ground-water Occurrence in Northern and Central Parts of Western Colorado, Colorado Water Conservation Board, Colorado Water Resources Circular No. 15, 25 pp.

Borchert, W. B. 1987. Water Table Contours and Depth to Water in the Southeastern Part of the Sweetwater River Basin, Central Wyoming Map. Water Resources Investigations Report 86-4205.

Bower, P., S. D. Creasman, W. Current, and B. Amidon. 1991. Archaeological Investigations of the Exxon Wyoming-Dakota $CO_2$ Pipeline, Segment 2, Bairoil Terminal to Hartzog Draw.

Brechtel, J. M., T. W. Burchett, M. J. Tate, P .P. Friedman, and G. S. Newberry. 1984. Archaeological Investigations along the Frontier Pipeline, Southern Wyoming. Cultural Resource Management Report Submitted to the Bureau of Land Management, Rawlins, Wyoming.

Bryant, L. 1999. BLM Paleontologist, Cheyenne, Wyoming. Personal Communication with K. Munson, ENSR, Fort Collins, Colorado. February 28, 2000.

Bureau of Land Management (BLM). 1984a. Platte River Resource Area Resource Management Plan/Draft EIS. Volumes 1 and 2.

_____. 1984b. Draft Environmental Impact Statement (EIS) for the Buffalo Resource Management Plan. Volume 1. August 1984.

_____. 1985a. Bairoil/Dakota Carbon Dioxide Projects Draft EIS. Cheyenne, Wyoming.

_____. 1985b. Record of Decision for the Resource Management Plan/Final EIS for the Platte River Resource Area. Casper District, Casper, Wyoming. July 1985.

_____. 1985c. Record of Decision for the Resource Management Plan/Final EIS for the Buffalo Resource Area. Casper, Wyoming. October 1985.

_____. 1986a. Bairoil/Dakota Carbon Dioxide Projects. Final EIS. Cheyenne, Wyoming. February 1986.

_____. 1986b. Final Resource Management Plan/EIS for the Lander Field Office. Lander, Wyoming. July 1986.

_____. 1986c. Visual Resource Management System. BLM Manual Section 8400.

_____. 1987. Record of Decision for the Lander Resource Management Plan. Lander Field Office. Rawlins District, Rawlins, Wyoming. June.

_____. 1989. Amoco Carbon Dioxide Projects Final EIS. Casper District, Casper, Wyoming. November.

_____. 1990. Final Lander Wilderness EIS for the Lander Field Office. Rawlins District, Rawlins, Wyoming. March.

_____. 1991. Exxon Wyoming-Dakota Pipeline Segment 2 and Hartzog Draw Unit $CO_2$ Projects. Environmental Assessment. ENSR, Fort Collins, Colorado.

_____. 1997. Cave Gulch – Bullfrog – Waltman Natural Gas Development Project Draft EIS. Casper District, Casper, Wyoming.

_____. 2000. Planning Overlays and Maps. Casper, Lander, and Buffalo Field Offices. Data Obtained March 7, 8, and 15, 2000.

Carpenter, K. 1986. Exxon Bairoil/Dakota $CO_2$ Pipeline Project. Results of a Class III Paleontological Inventory of Segment 2, Wyoming Segment. August 29, 1986.

Case, J. C. 1986a. Preliminary Map of Suspected Active Faults with Surficial Expression in Wyoming.

_____. 1986b. Preliminary Map of Landslides in Wyoming.

_____. 1986c. Preliminary Map of Liquefaction-Prone Areas in Wyoming. Open File Report 86-2. Geological Survey of Wyoming.

_____. 1990. Wyoming State Environmental Geologist. Personal Communication with J. Nyenhuis, ENSR, Fort Collins, Colorado. September, 1990.

Case, J. C. and C. S. Boyd. 1984. Preliminary Map of Earthquake Epicenters in Wyoming.

_____. 1987. Preliminary Map of Windblown Sand Areas in Wyoming. Open File Report 87-9. Geological Survey of Wyoming.

Case, J. C., L. L. Larsen, C. S. Boyd, and J. C. Cannia. 1995. Earthquake Epicenters and Suspected Active Faults with Surficial Expression in Wyoming. Preliminary Hazards Report 97-1. Geological Survey of Wyoming.

Commonwealth Associates, Inc. 1983. Class III Archaeological Survey for the Proposed Frontier Pipeline Unit, Sweetwater, Fremont, and Natrona Counties, Wyoming. Cultural Resource Management Report Submitted to Bureau of Land Management, Rawlins, Wyoming.

Coulam, N. J. (n.d.) Cultural Resource Inventory of Three Miles of Reroutes along the Frontier Pipeline, Fremont County, Wyoming. Cultural Resource Management Report Submitted to Bureau of Land Management, Rawlins, Wyoming.

Darlington, D. G., S. D. Creasman, M. D. Kautzman, and K. W. Thompson. 1995. Archaeological Data Recovery Along the Exxon Bairoil to Hartzog Draw Pipeline in Central Wyoming.

Dufek, D. 1996. Fisheries Supervisor, Wyoming Game and Fish Department, Lander, Wyoming. Personal Communication with R. Daggett, ENSR, Fort Collins, Colorado, October 2, 1996.

ENSR. 2000a. Sage Grouse Survey Results for the Petro Source $CO_2$ Pipeline Project. Surveys Conducted March 23-28 and March 31-April 6, 2000. Fort Collins, Colorado.

_____. 2000b. Summary Report of the April/May 2000 Raptor Nest Aerial and Ground Surveys for the Petro Source $CO_2$ Pipeline Project. Fort Collins, Colorado.

Federal Register. 2001. Presidential Documents. Executive Order 13186. Responsibilities of Federal Agencies to Protect Migratory Birds. Federal Register 66 (11): 3853-3856.

Felley, D. 2001. Wildlife Biologist, U.S. Fish and Wildlife Service, Cheyenne, Wyoming. Personal Communication with C. Johnson and R. Daggett, ENSR, Fort Collins, Colorado. January 31,2000.

Fenneman, H. 1946. Physical Provinces of the United States with U.S. Geological Survey, Washington, D.C.

Geiger, P. 2000. Howell Oil, Midwest, Wyoming. Personal Communication with R. Daggett, ENSR, Fort Collins, Colorado. December 28, 2000.

Glass, G. B. and D. L. Blackstone, Jr. 1987. Geology of Wyoming. Geologic Survey of Wyoming. Laramie, Wyoming.

Harris, R. E., W. D. Hausel, and J. E. Meyer. 1985. Metallic and Industrial Minerals Map of Wyoming. Map Series 14. Geological Survey of Wyoming.

Hausel, W. D. and G. B. Glass. 1980. Minerals and Coal. County Resource Series No. 6-Natrona County, Wyoming. Geological Survey of Wyoming.

Haygood, D. 2000. Natrona County Weed Control District. Personal Communication with D. Richardson, ENSR, Fort Collins, Colorado. March 14, 2000.

Hillman, C. N. and J. W. Carpenter. 1980. Breeding Biology and Behavior or Captive Black-footed Ferrets. International Zoo Yearbook 23:186-191.

Hilman, R. G., R. G. Rosenberg, K. H. Dueholm, and P. H. Sanders. 1987. Final Inventory and Testing Report along the Exxon Carbon Dioxide Pipeline Project Segment 2: Crooks Gap to the Wyoming-Montana Border.

Hodson W. G., R. H. Pearl, and S. A. Druse. 1973. Water Resources of the Powder River Basin and Adjacent Areas, U. S. Geological Survey. Hydraulic Investigations Atlas HA-465.

Johnson, H. R. 1982. Outlook for Enhanced Oil Recovery. U. S. Department of Energy Internal Report. Bartlesville, Oklahoma.

Johnson, T. 2000. U.S. Army Corps of Engineers, Cheyenne, Wyoming Office, Personal Communication with K. Caddis-Burrell, ENSR, Fort Collins, Colorado. April 20, 2000.

Knopf, F. 1999. Senior Scientist, U.S. Geological Survey. Personal Communication with C. Johnson, ENSR, Fort Collins, Colorado. July 21, 1999.

Kruger, P. W. 1981. Report on Climate, Air Quality, and Noise for the Cache Creek – Bear Thrust EIS. U.S. Geological Survey Open File Report 81-859. Billings, Montana.

Kuchler, A. W. 1975. Potential Natural Vegetation of the Conterminous United States. Special Publication Number 36.

Litzel, R. 2000. Johnson County Weed Control District. Personal Communication with D. Richardson, ENSR, Fort Collins, Colorado. March 2, 2000.

Long, M. M. 2000. Field Supervisor, U.S. Fish and Wildlife Service, Cheyenne, Wyoming. Personal Communication with L. Nielsen, ENSR, Fort Collins, Colorado. December 4, 2000.

Lotsenhauser, R. 1990. Casper Area Department of Employment. Personal Communication with J. Kathol, ENSR, Fort Collins, Colorado. October, 1990.

Love, J. D. and A. C. Christiansen. 1986. Geologic Map of Wyoming.

Lyon, J. L. and A. L. Ward. 1982. Elk and Land Management. Pages 443-447 in J. W. Thomas and D.E. Towgill, Eds. Elk of North America: Ecology and Management. Stackpole Books, Harrisburg, PA.

Malnor, L. K. and S. E. Arnold. 1997. Soil Survey of Natrona County Area, Wyoming. Natural Resource Conservation Service. United States Department of Agriculture.

Marceau, T. E. 1991a. Concurrence Letter to BLM Casper Field Office Regarding Site Evaluations for the Exxon Wyoming-Dakota $CO_2$ Pipeline, Hartzog Draw Segment (Segment 2). July 17, 1991.

_____. 1991b. Concurrence Letter to BLM Casper Field Office Regarding Cultural Resources Investigations for the Exxon Wyoming-Dakota $CO_2$ Pipeline, Hartzog Draw Segment (Segment 2). August 22, 1991.

Mariah Associates. 1995. Draft Environmental Impact Statement for the Green Mountain Mining Venture Jackpot Mine Project, Fremont and Sweetwater Counties, Wyoming. Prepared for Lander Field Office, Rawlins District, BLM, Rawlins, Wyoming.

Miller, J. A. and R. A. Jones. 1981. A Laboratory Study to Determine Physical Characteristics of Heavy Oil after $CO_2$ Saturation. Paper SPE 9789 presented at the 2nd Joint SPE/DOE Symposium on Enhanced Oil Recovery. Tulsa, Oklahoma. April, 1981.

Mooney, A. 2000. Campbell County Weed Control District. Personal Communication with D. Richardson, ENSR, Fort Collins, Colorado. March 15, 2000.

Mountain West, Inc. 1979. Pipeline Construction Workers and Community Impact Surveys Report.

Murphy, M. L., C. P. Hawkins, and N. H. Anderson. 1981. Effects of Canopy Modification and Accumulated Sediment on Stream Communities. Transactions of the American Fisheries Society. 110: 469-478.

Nelms, R. 2000. Westport Oil, Denver, Colorado. Personal Communication with R. Daggett, ENSR, Fort Collins, Colorado. Devember 28, 2000.

Nissley, C. 1994. Letter from the Advisory Council on Historic Preservation. REF: Treatment Plan for the Exxon Wyoming-Dakota Carbon Dioxide Pipeline, Segment 2, Bairoil to Hartzog Draw, Wyoming.

Oberlie, S. 2001. Wildlife Biologist, Bureau of Land Management, Lander Field Office. Personal Communication to ENSR Regarding the Proposed List of BLM Wyoming Sensitive Species. February 9, 2001.

_____. 1999a. Wildlife Biologist, Bureau of Land Management, Lander Field Office. Personal Communication with C. Johnson, ENSR, Fort Collins, Colorado. August 19, 1999.

_____. 1999b. Wildlife Biologist, Bureau of Land Management, Lander Field Office. Personal Communication with C. Johnson, ENSR, Fort Collins, Colorado. May, 1999.

Parrish, T. L., S. H. Anderson, and W. F. Oelklaus. 1993. Mountain Plover Habitat Selection in the Powder River Basin, Wyoming. Prairie Naturalist 25(3): 219-226.

Petro Source. 2000. Personal Communication with R. Daggett, ENSR, Fort Collins. December 29, 2000.

Planning Information Corporation (PIC). 1988a. Water Resources Technical Report. Prepared for USDI, BLM for Amoco $CO_2$ Project EIS. Casper, Wyoming.

_____. 1988b. Transportation Technical Report. Prepared for USDI, BLM for Amoco $CO_2$ Project EIS. Casper, Wyoming.

Reed, D. F. 1981. Conflicts with Civilization. Pages 509-536, In O. C. Wallmo, Ed. Mule and Black-tailed Deer of North America. University of Nebraska Press, Lincoln.

Reed, J. R. 1977. Stream Community Response to Road Construction Sediments. Virginia Water Resources Research Center Bulletin 97, 61 pp.

Richmond, S. 1999. U.S. Department of Energy. Personal communication with D. Eley, ENSR, Fort Collins, Colorado. September 28, 1999.

Robinson, F. 1979. The Effects of Large Underground Pipelines on Aquatic Life and Habitats. Northern Tier Report No. 3. Prepared for the Montana Department of Natural Resources and Conservation, Helena, Montana, 68 pp.

Scott, R. 2001. Department of Biology, Central Wyoming College, Riverton, Wyoming. Personal Communication with R. Daggett, ENSR, Fort Collins, Colorado, February 23, 2001.

_____. 2000. An Evaluation of Plant Species of Concern and Their Potential for Occurrence on the Proposed Pipeline Corridor. Prepared for ENSR. April 2, 2000.

Scott, R. and B. Scott. 2000. Vascular Plant Survey of the Proposed Petro Source Carbon Dioxide Pipeline. Prepared for ENSR. July 26, 2000.

Sheperd Miller, Inc. 1999. Site Ground Water Characterization and Evaluation. Appendix A, Site Investigation Report, Volume 2 of 6. Report prepared for Western Nuclear, Inc., Split Rock Mill Site, Jeffrey City, Wyoming.

Sittig, M. 1981. Handbook of Toxic and Hazardous Chemicals. Noyes Publications, Park Ridge, New Jersey.

Soil Conservation Service. 1981. Land Resource Regions and Major Land Field Offices of the United States. Agriculture Handbook 296. Revised December 1981.

South Coast Air Quality Management District. 1993. California Environmental Quality Act (CEQA) Air Quality Handbook.

Terres, J. K. 1991. The Audubon Society Encyclopedia of North American Birds. New York.

U.S. Census Bureau. 1990. 1990 Census Lookup. Summary Level: State-County. Internet site: http://www.venus.gov/cdrom/lookup/977972373.

_____. 1997. Model-Based Income and Poverty Estimates. Internet site: http://www.census.gov/hhes/www/saipe/estimate/cty/cty56025.htm. Poverty Thresholds. Internet site: http://www.census.gov/hhes/poverty/threshld/thresh97.html.

_____. 1999. Population Estimates Program, Population Division. County Population Estimates for July 1, 1999 and Population Change. Internet site: http://www.census.gov/population/estimates/county/co-99-1/99CI_56.txt.

U.S. Environmental Protection Agency (USEPA). 1985. Compilation of Air Pollutant Emission Factors Volume II – Mobile Sources. AP-42.

_____. 1997. Environmental Justice Guidance Under the National Environmental Policy Act. Council on Environmental Quality. December 10, 1997.

U.S. Fish and Wildlife Service (USFWS). 1989. Black-footed Ferret Survey Guidelines for Compliance with the Endangered Species Act. Denver, Colorado, and Albuquerque, New Mexico. April 1989.

_____. 1994. Ninety-day Finding on Pending Petition for Swift Fox (Action Needed). 35 pp.

_____. 1999. Draft Mountain Plover Survey Guidelines. 7 pp.

_____. 2000. Letter Response to R. Daggett, ENSR, Fort Collins, Colorado. 7 pp. March 16, 2000.

VanFleet, L. 2000. Wyoming Game and Fish Department. Personal Communication with C. Johnson, ENSR, Fort Collins, Colorado. October 10, 2000.

VerPloeg, A. J. and T. R. Stephenson. 1980. Petroleum 1. County Resource Series No. 6-Natrona County, Wyoming. Geological Survey of Wyoming.

Waters, T. F. 1995. Sediment in Streams. Sources, Biological Effects and Control. American Fisheries Society Monograph 7, 251 pp.

Welder, G. E. and L. J. McGregory. 1966. Groundwater Reconnaissance of the Great Divide and Washakie Basins and Some Adjacent Areas, Southwestern Wyoming. U.S. Geological Survey, Hydrologic Investigations Atlas HA-219, 10 pp and maps.

Western Wyoming College. 1991a. Trona Shed Reroute. Affidavit of Cultural Resource Inventories. October 28, 1991.

_____. 1991b. Loshe Reroute. Affidavit of Cultural Resource Inventories. October 24, 1991.

_____. 1991c. Morton Ranch Reroute. Letter Report. November 25, 1991.

Wolff, S. 2000. Staff Aquatic Biologist, Wyoming Game and Fish Department, Cheyenne, Wyoming. Memorandum to R. Daggett, ENSR, Fort Collins, Colorado. 2 pp. March 3, 2000.

Woolley, T. P., F. G. Lindzey, and R. Rothwell. 1995. Swift Fox Surveys in Wyoming. Annual Report. December 1, 1995. 2 Opp.

Wyoming Game and Fish Department. 1987. Wyoming Trout Stream Classification Map. Cheyenne, Wyoming.

_____. 1996. Nongame Bird and Mammal Plan: A Plan for Inventories and Management of Nongame Birds and Mammals in Wyoming. October 1996.

_____. 1997. Atlas of Birds, Mammals, Reptiles, and Amphibians in Wyoming. November 1997.

_____. 2000. Correspondence to D. Eley, ENSR, Fort Collins, Colorado. March 6, 2000.

Wyoming Department of Administration and Information. 2000. Division of Economic Analysis. Internet web site: http://eadiv.state.wy.us. Data obtained by D. Eley, ENSR, Fort Collins, Colorado. March 12, 2000.

Wyoming Department of Employment. 2000. Labor Market Information. Internet web site: http://imi.state.wy.us. Data obtained by D. Eley, ENSR, Fort Collins, Colorado. March 12, 2000.

Wyoming Department of Environmental Quality (WDEQ). 1998. Water Quality Rules and Regulations. Chapter 1. Cheyenne, Wyoming.

_____. 1993. Water Quality Rules and Regulations. Chapter 8. Cheyenne, Wyoming.

Wyoming Department of Revenue. 1998a. Ad Valorem Division. "*Wyoming Property Taxation 1997*." Internet web site: http://159.238.111.110/adval/advalframe.htm.

_____. 1998b. 1998 Annual Report. Tax Division. Internet web site: http://revenue.state.wy.us/HomePage/statistics.htm.

Wyoming Electronic Scout. 2000. Places to Stay. Internet web site: http://wyomingtourism.org/recreation/places_to_stay.htm. Data obtained by D. Eley, ENSR, March 15, 2000.

Wyoming Oil and Gas Commission. 1999. Wyoming Oil and Gas Statistics, 1999.

Wyoming Natural Diversity Database (WYNDD). 2000. Correspondence to R. Daggett, ENSR, Fort Collins, Colorado. February 16, 2000.

Wyoming State Geological Survey. 1996. Unpublished Aquifer Ranking System. Laramie, Wyoming.

# APPENDIX A

# PROGRAMMATIC AGREEMENT

**Draft: 2/09/2001**

**Programmatic**
**Memorandum of Agreement**
**between**
**Wyoming State Historic Preservation Office**
**and**
**Bureau of Land Management Casper Field Office**
**Regarding the**
**PetroSource - Bairoil/Hartzog Draw $CO_2$ Pipeline**

**WHEREAS**, Petro Source Corporation of Houston, Texas (Petro Source) has applied to the Bureau of Land Management (BLM) for a right-of-way to construct a 155 mile $CO_2$ pipeline and related facilities in Wyoming; and

**WHEREAS**, according to provisions in the National Programmatic Agreement (1997), and the Wyoming Statewide Protocol (1998) this Programmatic Agreement is entered into by the BLM and Wyoming State Historic Preservation Office (SHPO). Concurring parties to this Agreement are Petro Source, _____.

**WHEREAS**, between 1985 and 1991 Amoco Production Company (Amoco), Exxon Pipeline Company (Exxon), and Shell Pipeline Corporation (Shell) applied for and obtained a similar right-of-way grant by complying with all environmental and cultural resources requirements up to but not including initiation of construction; and

**WHEREAS**, the current parties involved in the project include BLM Casper Field Office (CFO), BLM Buffalo Field Office (BFO), BLM Lander Field Office (LFO), Wyoming State Historic Preservation Office (SHPO) and Petro Source Corporation; and

**WHEREAS**, the project crosses public lands administered by BLM Casper Field Office (CFO), BLM Buffalo Field Office (BFO) and BLM Lander Field Office (LFO), majority of lands crossed by the proposed pipeline are administered by CFO, CFO will take the project lead for BLM; and

**WHEREAS**, the cultural resource inventory, testing and mitigation that has been completed, reviewed and approved by the Advisory Council on Historic Preservation (ACHP), SHPO, and BLM satisfies the preconstruction requirements of the original 1985 Memorandum of Agreement; and

**WHEREAS**, changes in research focus may require modification of research design to address current data needs; and

**WHEREAS**, while PetroSource plans to construct the pipeline in two phases, Bairoil to Sussex in 2001 and Sussex to Hartzog Draw in 2002, the NEPA planning and cultural resource compliance will be handled as one project;

**WHEREAS**, construction of the proposed pipeline will affect historic properties on and adjacent to the right-of-way,

**NOW, THEREFORE**, BLM and Wyoming SHPO agree that the undertaking shall be implemented in accordance with the following stipulations in order to take into account the effect of the undertaking on historic properties.

## Project Background

In the mid 1980s, Exxon, Amoco and Shell submitted a proposal to construct a gas pipeline and related facilities to transport $CO_2$ from the Bairoil Terminal (south of Jeffrey City, Wyoming) to Tioga, North Dakota for enhanced oil field recovery. As part of the compliance work to acquire the right-of-way, an Environmental Impact Statement was completed, and cultural resource inventory, testing, site evaluation, and preliminary mitigation work was carried out. A research design and treatment plan to address cultural resources was prepared to guide the cultural resources and paleontological work. The original proposal crossed multiple Federal jurisdictions in North Dakota, Montana, and Wyoming. A Memorandum of Agreement was signed by the Montana, North Dakota, and Wyoming State Historic Preservation Officers (SHPO), the Advisory Council on Historic Preservation (ACHP), and the Bureau of Land Management (BLM), with Exxon signing as a concurring party. The Agreement stipulated the measures required to properly take into account the effects of the pipeline project on historic properties. Larson-Tibesar Associates was engaged to conduct a cultural resources inventory and to prepare a treatment plan based on

their findings. Following completion of the inventory and reporting work, the project was cancelled. In 1990, Exxon reactivated the project, although scope was reduced to extend from Bairoil Terminal to Hartzog Draw (southwest of Gillette, Wyoming). At that time, BLM recommended additional inventory on the now-155 mile alignment. Archaeological Services/Western Wyoming College (now Western Archaeological Services, WAS) was hired to conduct the new inventory and to conduct evaluative testing on a number of sites. Site visits and consultation among BLM, SHPO, WWC and Exxon defined a treatment strategy which included an open trench inspection of the entire line, selecting certain sites for pre-construction mitigative excavation, and planning for additional detailed excavation of new sites that might be located in the trench wall. This work resulted in formulation of an updated treatment plan to properly handle significant prehistoric and historic sites within the area of potential effect.

In 1990 and 1991, the remaining pre-construction actions identified in the treatment plan were implemented, including identification of cultural properties on the finalized route, testing and evaluation of potentially eligible sites and those for which initial field assessment was inconclusive, and development of a research design and treatment plan to guide mitigation of affected historic properties. The treatment plan called for extensive data recovery at five prehistoric sites and an alignment change to avoid one historic ranch complex. Three sites were excavated and one avoided by project redesign. Access to the fifth site was denied by the landowner. Ultimately, an alternate route bypassing the site with no disturbance was identified and has been incorporated in the plan of development. In 1992, after the pre-construction fieldwork had been completed, the project was once again cancelled. In 1999, Petro Source submitted an application to construct a portion of the original Bairoil-Hartzog Draw pipeline, from Bairoil Terminal to the Sussex Field, southeast of Kaycee, Wyoming as Phase I scheduled for August 2001 construction and Sussex to Hartzog Draw as Phase II, tentatively scheduled for 2002 construction. The intent, with one exception, is to utilize the right-of-way corridor originally proposed by Exxon, so that all existing environment, cultural, and permitting procedures completed to date would not need to be duplicated. The exception is an additional seven mile lateral extending from the main line generally east to a point just north of Midwest, Wyoming.

## Current Status

At present, several elements in the original agreement have been met. Required work satisfying stipulations I, II, III, and IV in the original 'Final Memorandum of Agreement (Cultural Resources)" has been carried out and approved, where appropriate, by BLM, Wyoming SHPO and ACHP. This includes identification of cultural properties, testing and evaluation of cultural properties, and treatment plans for cultural properties. The pre-construction evaluative testing and data recovery operations outlined in the 1990 treatment plan (Project Treatment Plan for the Exxon Wyoming-Dakota CO2 Pipeline, Segment 2, Bairoil to Hartzog Draw, Wyoming) (Attachment A) have been completed and documented. In addition, a number of minor surveys were completed for re-routes and ancillary facilities. Attachment B contains documentation of review and concurrence.

The previous work has been reassessed for adequacy in terms of current policy and application of archaeological science. BLM has determined that the work completed to date is acceptable. In order to address current archaeological questions the treatment plan is being revised to reflect current theory and methods (Attachment C).

## STIPULATIONS

BLM shall ensure that the following measures are carried out:

**I. Procedures and Roles:**

A. As the federal agency charged with permitting land use actions on public lands, the Bureau of Land Management is the project lead in managing cultural resource activities for this project. The major portion of the proposed pipeline crosses lands administered by the Casper Field Office, and this office will coordinate all review, compliance and consultation among the three Field Offices involved, and provide reports and review comments to SHPO for concurrence. The archaeological consultant will be responsible for all field work, analysis and report preparation.

B. All work set forth in this agreement will be carried out in accordance with this agreement and with the procedures detailed in the revised Treatment Plan.

**II. New Inventory:**

All areas of new disturbance associated with PetroSource construction shall be inventoried for cultural resources

prior to disturbance. These areas include, but are not limited to, additional access routes, staging areas and pipe storage areas not included in the original inventory work. Use of such areas by Petro Source shall not be approved until documentation has been received, reviewed and approved.

**III. Monitoring of Construction Work:**

Construction monitoring during topsoil stripping and right-of-way preparation will be conducted where the pipeline route crosses prehistoric site 48NA1060. Monitoring specifications and treatment of any cultural materials discovered during monitoring will be handled according to the Treatment Plan. This work will be done immediately following centerline staking and well in advance of trenching to provide sufficient time to identify, evaluate and treat any shallowly subsurface materials that might be exposed during topsoil stripping.

**IV. Ditches and irrigations systems:**

Irrigation ditches were not recorded in the original inventories. At least one such ditch was noted at 48NA1060 and others may be present elsewhere along the right-of-way corridor. Wyoming State Engineer's water adjudication tables will be searched to identify ditches appropriated at over 7 cfs, and these will be recorded and evaluated prior to construction. Ditches of 7 cfs or less will be identified, examined during the open trench inspection phase, and documented in the final report per the Wyoming Statewide Protocol, Appendix D-2.

**IV. Open Trench Inspection:**

Inspection of open trenches (OTI) for evidence of buried cultural properties will be conducted for the entire pipeline length except where impractical, such as road crossings. All newly discovered cultural resources will be recorded and a datum established outside the pipeline construction corridor to facilitate relocation. Pipe installation and covering may proceed through the area once preliminary documentation is completed. All open trench inspection activities will be governed by the Treatment Plan. These activities include: open trench inspection, geomorphological analysis, evaluative testing, and proposed mitigation.

**V. Treatment of Cultural Materials:**

The project treatment plan will be followed and will include:

- recording of new discoveries
- evaluation of new discoveries
- determination of resources to be mitigated
- 600 squares of mitigation applied to Phase I
- mitigation needs (required squares) for Phase II to be determined on completion of Phase II OTI and evaluation

Implementation of the plan will mitigate effects from pipeline construction on significant cultural resources.

**VI. Reporting on the Investigations of Cultural Properties:**

A. Reports will conform to the guidelines in the Secretary of the Interior's *Standards and Guidelines for Archaeology and Historic Preservation*. BLM Casper Field Office will consolidate report review comments and submit to SHPO for concurrence. Scheduling of reports will take into account the amount of data recorded or analyses required, and other factors related to the reporting effort. The scheduling goal is to achieve timely, high quality reporting. Reporting shall consist of interim reports at the conclusion of a fieldwork activity and a final report dealing with open trench inspection and data recovery for the two proposed construction phases.

B. Report Schedule:

1. Interim reports

DRAFT

Interim reports shall be submitted within 60 calendar days of completion of each phase of fieldwork. Minimally, each report will summarize the activities conducted and will list fieldwork dates, field personnel, identify the area examined, list sites encountered with brief description, and provide a discussion of the results and preliminary assessments. The preliminary reports are intended as management summaries and are not expected to be an exhaustive treatment of the data. Letter format will be acceptable, providing sufficient detail is provided.

2. Final report

A final report shall be submitted in draft form no later than two (2) years after conclusion of the fieldwork. BLM will review the draft report and return to the cultural resources consultant within 60 calendar days. Consultant will make corrections and revisions and submit the final version within 60 calendar days. The final report organization and contents shall conform to Secretary of Interior guidelines.
Minimally, the report shall contain:

abstract
intro/project history/timeline
personnel, position, date of service

cultural environment
physical environment

methodology
results/integrate with research questions

project synthesis (shall include all relevant data from this and adjacent projects)

Should it prove impossible to meet the report schedule, a new due date may be negotiated and an amendment made to this Agreement by following the procedures identified below.

**VII. Policy on Landowner Denial of Access for Cultural Resource Work:**

Should landowner denial of access to conduct cultural resource investigations occur, BLM shall attempt to resolve the problem. In the event that no agreement can be reached regarding access, BLM will consult with SHPO and ACHP to address adverse effects.

**VIII. Curation:**

A. Collected cultural materials will be stabilized, labeled, and catalogued. Materials from BLM lands will be stored according to existing curation agreements.

B. The disposition of cultural materials from private lands will be determined by the landowner, after all analysis is completed. If the landowner wishes the materials to remain in govenrment posession, a reciept for donation (or other appropriate documentation) will be provided the landowner and the artifactual materials will be curated per stipulation VII.A above.

**IX. Human Remains:**

Treatment of any human remains will guided by NAGPRA and in consultation among the appropriate Native Americans, BLM and SHPO. BLM will contact local law enforcement authorities to determine whether or not any remains constitute a crime scene. Once determined to be archaeological in nature, human remains will be left in

place and security measures established until the proper approach to removal is agreed upon by BLM, SHPO and affected tribes. On discovery of human remains, all construction work shall cease within 100 m (328 ft) radius of the find.

**X. Native American Consultation:**

The views of relevant Native American tribal groups shall be solicited according to current policy and as required under National Historic Preservation Act (as amended) and the National Programmatic Agreement.

**XI. Dispute Resolution:**

Should there be disagreement regarding the implementation of this Agreement, the disagreeing parties will consult with the Council. Sufficient information regarding the disagreement will be forwarded to the Council and the Council will make its recommendations within 15 working days from receipt of the documentation. The BLM and Applicant will adhere to the Council's recommendation or notify the Council's Executive Director as to why the recommendation cannot be followed and request that he ask the Chairman to schedule the issue for consideration at a Council meeting. Until the Chairman has responded or the Council has provided its comments, the BLM and Applicant will not take any action regarding the disputed issue that may affect cultural properties eligible for the National Register or properties that are unevaluated. Other aspects of this Agreement about which there is no disagreement may be implemented during the period of the dispute resolution.

**XII. Failture to Carry Out the Terms of the Agreement:**

Failure to carry out the terms of this Agreement requires that the BLM request the Council's comments in accordance with 36CFR800. If the BLM or Applicant cannot carry out the terms of this Agreement, no actions shall be taken or sanctioned that would result in an adverse effect with respect to cultural properties which may be eligible for the National Register covered by this Agreement or that would foreclose the Council's consideration of modifications or alternatives to the project which would avoid or mitigate the adverse effect until the process has been completed.

**XIII. Amendment to this Agreement:**

If any of the signatories to this Agreement determines that the terms of this Agreement cannot be met or believes a change is necessary, that signatory shall immediately request the consulting parties in writing to consider an amendment or addendum to this Agreement. Any amendment or addendum will be signed by the signatories to this Agreement and it shall be executed in the same manner as the original Agreement.

**XIV. Reporting on the Fulfillment of this Agreement:**

Within 90 days after carrying out the terms of this Agreement, BLM will provide a writen report to all signatories to the Agreement on actions taken to fulfill the terms of this Agreement.

Execution of the Memorandum of Agreement by the Bureau of Land Management and the Wyoming State Historic Preservation Officer, and implementation of its terms, evidences that the Bureau of Land Management has afforded SHPO an opportunity to comment on the proposed undertaking and its effects upon historic properties, and that the Bureau of Land Management has taken into account the effects of the undertaking on historic properties.

DRAFT

**Signatures**

Bureau of Land Management

By: _____ Date: _____

Wyoming State Historic Preservation Officer

By: _____ Date: _____

Concur:
PetroSource, Incorporated

By: _____ Date: _____

Invited parties: (currently unspecified )

By: _____ Date: _____

By: _____ Date: _____

Attachments:

Attachment A; 1985 Programmatic Agreement
Attachment B: evidence of prior concurrence
Attachment C: Treatment Plan

DRAFT

# APPENDIX B

# WETLAND AND NOXIOUS WEED DATA

## Table B-1
## Important Water Features Located Along the Proposed PSC $CO_2$ Pipeline

| Latitude (N)/ Longitude (W) (Degrees, Minutes) | Crossing Name and Number (Milepost) | Type (perennial, intermittent, ephemeral, playa) | County | Township Range Quarter/ Quarter | NWI/USGS 7.5-Minute Quadrangle | Wetland Classification Field (NWI Map) | Delineation Method (Date) | Wetland Crossing Length (feet) | Jurisdictional Waters of the U.S. Crossing Length (feet) (does not include wetland footage) | Area Temporarily Affected (Acre)[1] | Dominant Plants | Comments |
|---|---|---|---|---|---|---|---|---|---|---|---|---|
| 42 21.2, 107 49.4 | 1 (113.04-113.11) | Isolated Wetland | Fremont | 28N 92W NE ¼, SW ¼, S 33 | Crook's Peak | PSS1C/PEMCb (PABGb, PEMC, PSSC) | 1987 COE Delineation Manual (7/6/00) | 350 (in addition, approximately 600 feet are paralleled within normal high water mark) | 0 | 0.6 | Willow, rushes, grasses | Ground-checked 7/6/00. Move line to follow existing ROW |
| 42 21.333, 107 49.122 | 113.35 | Tributary to Crooks Creek; beaver ponds | Fremont | 28N 92 W NW ¼, SE ¼, S 33 | Crook's Peak | PSS1b (PSSC) | 1990 NWI map review: July 2000 aerial reconnaissance identified beaver ponds in area | ~450 | 0 | 0.74 | Willow | Passes thru beaver pond area. Move ~300' North to avoid |
| 42 22.768, 107 47.278 | 116.25 | Sheep Creek | Fremont | 28N 92W SE ¼, SW ¼, S 23 | Jeffrey City | R3US1 (No NWI designation/ OWUS) | 1990 NWI map review: July 2000 aerial reconnaissance ~750' to SE identified area as R3US1 | 0 | 2 - open water 10 - top of bank | 0.02 | Cottonwood, willow, grasses | Riparian |
| 42 22.850, 107 47.184 | 116.30 | Unnamed tributary to Sheep Creek | Fremont | 28N 92W SE ¼, SW ¼, S 23 | Jeffrey City | R3US1 (No NWI designation/ OWUS) | 1990 NWI map review: July 2000 aerial reconnaissance ~200' to east identified area as R3US1 | 0 | 2- open water 10 - top of bank | 0.02 | Cottonwood, willow, grasses | Riparian |
| 42 23.36, 107 46.59; riparian and WUS: no wetland areas | 116.95 | Unnamed tributary NE of Sheep Creek | Fremont | 28N 92W NE ¼, NE ¼, S 23 | Jeffrey City | R4SBA (No NWI designation/ OWUS) | July 2000 aerial reconnaissance | 0 | 10 | 0.02 | Pine, cottonwood, sagebrush | Poor quality riparian |

## Table B-1 (Continued)

| Latitude (N)/ Longitude (W) (Degrees, Minutes) | Crossing Name and Number (Milepost) | Type (perennial, intermittent, ephemeral, playa) | County | Township Range Quarter/ Quarter | NWI/USGS 7.5-Minute Quadrangle | Wetland Classification Field (NWI Map) | Delineation Method (Date) | Wetland Crossing Length (feet) | Jurisdictional Waters of the U.S. Crossing Length (feet) (does not include wetland footage) | Area Temporarily Affected (Acre)[1] | Dominant Plants | Comments |
|---|---|---|---|---|---|---|---|---|---|---|---|---|
| 42 23.928, 107 44.750 | 3 (118.6-118.8) | West Cottonwood Creek | Fremont | 28N 91W NW ¼, SW ¼, S 18 | Split Rock NW | R4SBA/PSSA (PSSA) | 1990 NWI map review: July 2000 aerial reconnaissance ~500' to south identified area as R4SBA/PSSA | 0 | 500 (parallels drainage) | 0.0 | Willow | Move ROW 100' to North |
| 42 23.975, 107 44.546 | 118.9 | West Cottonwood Creek | Fremont | 28N 91 W SW ¼, NE ¼, S 18 | Split Rock NW | (PEMC) | 1990 NWI map review | 0 | 10 | 0.02 | Not available | |
| 42 23.986, 107 43.864 | 5 (119.38) | West Cottonwood Creek | Fremont | 28N 91W SW ¼, NW ¼,S 17 | Split Rock NW | PSS1C/R3UB (PSSA) | July 2000 aerial reconnaissance | 10 | 50 (2 feet of open water, 2 channels – 10 and 20 feet each) | 0.10 | Cottonwood, willow, Baltic rush | Jurisdictional WUS, riparian |
| 42 24.677, 107 42.236 | 7 (121.03) | Middle Cottonwood Creek | Fremont | 28N 91W NW ¼, SE ¼, S 9 | Split Rock NW | PSSA/R4SBC (PSSA) | 1987 COE delineation manual (7/6/00) | 15 | 20 (includes 5 feet of open water) | 0.06 | Willow, cottonwood, Baltic rush, sedges, grasses, mint | Ground-checked 7/6/00, riparian and wetland |
| WUS; no riparian or wetland areas | 8 (121.21) | Middle Cottonwood Creek | Fremont | 28N 91W NE ¼, SE ¼, S 9 | Split Rock NW | R4SBA (PSSA) | 1990 NWI map review; 1987 COE manual delineation (7/6/00) ~300' to south identified area as R4SBA | 0 | 500 (parallels drainage) | 0.0 | Sagebrush, grasses, cottonwood | Poor quality riparian move ~ 200-300' to south avoid paralleling drainage |
| 42 26.358, 107 39.167; Riparian and WUS; no wetland areas | 8B (124.28) | East Cottonwood | Natrona | 29N 90W SW ¼, SW ¼, S 31 | Split Rock NW | R4SBC (PSSA) | 1990 NWI map review. During July 2000 aerial reconnaissance, area ~500' to south of crossing was identified as R4SBC | 0 | 50 | 0.09 | Cottonwoods, grasses | Not wet; riparian |

## Table B-1 (Continued)

| Latitude (N)/ Longitude (W) (Degrees, Minutes) | Crossing Name and Number (Milepost) | Type (perennial, intermittent, ephemeral, playa) | County | Township Range Quarter/ Quarter | NWI/USGS 7.5-Minute Quadrangle | Wetland Classification Field (NWI Map) | Delineation Method (Date) | Wetland Crossing Length (feet) | Jurisdictional Waters of the U.S. Crossing Length (feet) (does not include wetland footage) | Area Temporarily Affected (Acre)[1] | Dominant Plants | Comments |
|---|---|---|---|---|---|---|---|---|---|---|---|---|
| 42 28.805, 107 28.703 | 11 (134.25) | Sweetwater River | Natrona | 29N 89W SE ¼, SW ¼, S 15 | Bucklin Reservoir | R2UBH (R2UBH) | 1987 COE Delineation Manual (7/6/00) | 20 (10 feet. each side of river) | ~100 (includes 80 feet open water) | 0.21 | Sedges, spikerush, reed canarygrass, prairie cordgrass, mint | |
| 42 37.731, 107 14.797 | 150.1 | Dry Creek | Natrona | 31N 87W NW ¼, SW ¼, S 27 | Saddle Rock | (PUBFx) | 1991 NWI map review | 0 | 0 (~50' in non-jurisdictional stock pond) | 0 (0.09 acre of disturbance in non-jurisdictional stock pond) | Not available | Move line ~50' to north or south to avoid pond |
| 42 37.738, 107 14.778 | 15 (150.10) | Dry Creek | Natrona | 31N 87W NW ¼, SW ¼, S 27 | Saddle Rock | PEMC (PEMC) | 1991 NWI map review; 1987 COE manual delineation (7/7/00) ~400' to north | 4 | 2 - open water | 0.01 | Leafy spurge, plantain, yellow vetch, brome species | |
| 42 37.850, 107 14.598 | 18 (150.28) | Irrigation ditch draining into Dry Creek | Natrona | 31N 87W SW ¼, NW ¼, S 27 | Saddle Rock | Irrigation ditch (PEMC) | 1991 NWI map review; irrigation ditch identified ~300' to north during 7/7/00 ground survey | 0 | 0 (8' non-jurisdictional irrigation ditch) | 0 (0.01 acre of non-jurisdictional irrigation ditch) | Grasses | Irrigation ditch; non-jurisdictional WUS |
| 42 39.232, 107 12.677 | 152.8 | Unnamed trib. to Cottonwood Creek | Natrona | 31N 87W NW ¼, NE ¼, S 23, SE ¼, SE ¼, S 14 | Saddle Rock | R4SBA (No NWI designation/ OWUS) | 1991 NWI map review; area ~500' to east was identified asR4SBA during July 2000 aerial reconnaissance | 0 | 0 (Parallels drainage for ~800') | 0.0 (parallels drainage for 800') | Upland vegetation | Move ROW ~50-100' to east or west to avoid paralleling drainage |
| 42 42.015, 107 07.605 | 157.9 | Trib. To Horse Creek | Natrona | 32N 86W NW ¼, SW ¼, S 34 | Saddle Rock | PEMC (No NWI designation) | July 2000 aerial reconnaissance | 80 | 0 | 0.14 | Willow, sedges | |

## Table B-1 (Continued)

| Latitude (N)/ Longitude (W) (Degrees, Minutes) | Crossing Name and Number (Milepost) | Type (perennial, intermittent, ephemeral, playa) | County | Township Range Quarter/ Quarter | NWI/USGS 7.5-Minute Quadrangle | Wetland Classification Field (NWI Map) | Delineation Method (Date) | Wetland Crossing Length (feet) | Jurisdictional Waters of the U.S. Crossing Length (feet) (does not include wetland footage) | Area Temporarily Affected (Acre)[1] | Dominant Plants | Comments |
|---|---|---|---|---|---|---|---|---|---|---|---|---|
| 42 42.028, 107 07.558 | 19 (157.98-158.00) | Trib. to Horse Creek | Natrona | 32N 86W SW ¼, NW ¼, S 34 | Saddle Rock | R4SB/PEM (R4SBA) | July 2000 aerial reconnaissance | 15 | 5 | 0.03 | Willow, grasses, currents, sedges | |
| 42 46.065, 107 07.478 | 158.01 | Isolated spring | Natrona | 32N 86W NW ¼, SW ¼, S 34, NE ¼, SW ¼, S 34 | Saddle Rock | PEM1B (No NWI designation) | July 2000 aerial reconnaissance | 50 x 100 | 0 | 0.11 | Sedges and rushes, grasses | Spring associated with Horse Creek |
| 42 42.292, 107 06.975 | 158.3 | Trib. to Horse Creek | Natrona | 32N 86W NW ¼, SW ¼, S34, NE ¼, SW ¼, S 34 | Horse Creek Springs | PEM (No NWI designation) | July 2000 aerial reconnaissance | 20 | 0 | 0.03 | Sedges, grasses | |
| 42 46.626, 107 06.049 | 21 (159.34) | Trib. to Horse Creek | Natrona | 32N 86W SE ¼, SW ¼, S 26 | Horse Creek Springs | PEMC (PEMC) | 1991 NWI map review; during July 2000 aerial reconnaissance, area ~350' to east identified as PEMC | 15 | 0 | 0.03 | Willows, grasses | |
| 42 42.809, 107 05.714 | 22 (159.95) | Trib. to Horse Creek | Natrona | 32N 86W NE ¼, SE ¼, S 26 | Horse Creek Springs | PEMC (PEMC) | 1991 NWI map review; during July 2000 aerial reconnaissance, area ~400' to north identified as PEMC | 10 | 15 (top of bank) | 0.04 | Grasses | |

## Table B-1 (Continued)

| Latitude (N)/ Longitude (W) (Degrees, Minutes) | Crossing Name and Number (Milepost) | Type (perennial, intermittent, ephemeral, playa) | County | Township Range Quarter/ Quarter | NWI/USGS 7.5-Minute Quadrangle | Wetland Classification Field (NWI Map) | Delineation Method (Date) | Wetland Crossing Length (feet) | Jurisdictional Waters of the U.S. Crossing Length (feet) (does not include wetland footage) | Area Temporarily Affected (Acre)[1] | Dominant Plants | Comments |
|---|---|---|---|---|---|---|---|---|---|---|---|---|
| 42 43.113, 107 04.888 | 23 (160.80) | Trib. to Horse Creek | Natrona | 32N 86W SW ¼, NE ¼ , S 25 | Horse Creek Springs | R4SBA/ PEM (R4SBA) | 1991 NWI map review; during July 2000 aerial reconnaissance, area ~400' to southeast identified as R4SBA/PEMC | 4 | 8 | 0.02 | Grasses | |
| 42 44.037, 107 04.234 | 25 (162.04) | Trib. To Cabin Creek | Natrona | 32N 85W SW ¼, NW ¼, S 19 | Horse Creek Springs | PEMC (PEMC) | 1987 COG Delineation Manual (July 2000) | 0 | 200 | 0.34 | Grasses, sedges | |
| WUS: no riparian or wetland areas | 30 (165.05) | Trib. to Soap Creek | Natrona | 32N 85W SE ¼, NW ¼, S 5 | Eightmile Draw | R4SBA (PEMC) | 1991 NWI map review; area ~150' to west observed during July 2000 aerial reconnaissance | 0 | 0 (parallels drainage for 1,300') | 0 (parallels drainage for more than 500') | Upland vegetation | Move ROW ~ 50' to east to avoid paralleling drainage |
| 42 47.648, 107 01.966 | 32 (166.41) | Soap Creek | Natrona | 33N 85W NW ¼, NE ¼, S 33 | Eightmile Draw | R4SBA/ PEM (R4SBA) | 1991 NWI map review; area ~200' to west observed during July 2000 aerial reconnaissance | 5 | 5 | 0.02 | Grasses, sedges | |
| 42 49.382, 107 0.978 | 33 (168.90) | Poison Spider Creek | Natrona | 33N 85W NE ¼, NW ¼, S 22, SE ¼, SW ¼, S 15 | Eightmile Draw | PEMC (PEMC) | 1991 NWI map review; area ~200' to west observed during July 2000 aerial reconnaissance | 10 | 10 (~ 2 feet open water) | 0.03 | Grasses, sweet clover | Poison Spider Creek crossing |
| 42 51.651, 107 0.828; WUS: no riparian or wetland areas | 171.36 | Unnamed trib. to Casper Creek and stock tank | Natrona | 33N 85W SE ¼, NW ¼, S 3 SW ¼, NE ¼, S 3 | Eightmile Draw | R4SBA/PEM (No NWI designation/ OWUS) | 1991 NWI map review; R4SBA observed during July 2000 aerial reconnaissance ~700' to west | 0 | 10 | 0.02 | Grasses | PEM may occur at crossing; created by stock tank drainage |

## Table B-1 (Continued)

| Latitude (N)/ Longitude (W) (Degrees, Minutes) | Crossing Name and Number (Milepost) | Type (perennial, intermittent, ephemeral, playa) | County | Township Range Quarter/ Quarter | NWI/USGS 7.5-Minute Quadrangle | Wetland Classification Field (NWI Map) | Delineation Method (Date) | Wetland Crossing Length (feet) | Jurisdictional Waters of the U.S. Crossing Length (feet) (does not include wetland footage) | Area Temporarily Affected (Acre)[1] | Dominant Plants | Comments |
|---|---|---|---|---|---|---|---|---|---|---|---|---|
| 42 52.883, 107 0.670 | 35 (172.87-172.90) | Isolated wetland/ stock pond | Natrona (Private) | 34N 85W SW ¼, SE ¼, S 27 | Gaylord Reservoir | PABFh (PABFh) | 1991 NWI map review; area ~800' to the west observed during July 2000 aerial reconnaissance | 0 | 0 (non-jurisdictional stock pond) | 0 | Grasses | Confirm that ROW avoids stock pond |
| 42 55.308, 106 59.828 | 175.80 | Stock pond south of Square Top Butte (located east of ROW PI) | Natrona | 34N 85W NE ¼, NW ¼, S 14 | Square Top Butte | PUBFh (PUBFh) | 1991 NWI map review; area ~900' to the west of ROW observed during July 2000 aerial reconnaissance | 0 | 0 | 0 (non-jurisdictional) | Upland vegetation | Confirm that stock pond lies at least 50' east of ROW |
| 42 57.412, 106 59.162 | 178.3 | Isolated wetland/ stock pond | Natrona | 35N 85W SE ¼, SE ¼, S 35 | Square Top Butte | (PUSCh) | 1991 NWI map review | 0 | 0 (non-jurisdictional stock pond) | 0 (non-jurisdictional) | Not available | Move ROW ~100' to east or west to avoid stock pond |
| 42 57.971, 106 58.977 | 36 (179.00) | Middle Fork Casper Creek | Natrona | 35N 85W NW ¼, NW ¼, S 36 | Square Top Butte | R2UBF/PEMB (R2UBF/PEMC) | 1991 NWI map review; area ~300' to the east was identified as R2UBF/PEMB during July 2000 aerial reconnaissance | 10 | 5 (open water) | 0.03 | Baltic rush, plantain, alkali grass | |
| Intermittent stream crossings identified on USGS 7.5 minute topos from MP182.8 to 186.52 have been plowed under as observed during aerial reconnaissance – No drainages remain. | | | | | | | | | | | Upland vegetation/ cropland | |
| 42 59.271, 106 57.918 | 180.6 | Isolated wetland/ stock pond | Natrona | 35N 84W NW ¼, SW ¼, S 19 | Square Top Butte | (PEMah) | 1991 NWI map review | 200 | 0 (non-jurisdictional stock pond) | 0.34 | Not available | Move ROW ~100' to east to avoid pond |

## Table B-1 (Continued)

| Latitude (N)/ Longitude (W) (Degrees, Minutes) | Crossing Name and Number (Milepost) | Type (perennial, intermittent, ephemeral, playa) | County | Township Range Quarter/ Quarter | NWI/USGS 7.5-Minute Quadrangle | Wetland Classification Field (NWI Map) | Delineation Method (Date) | Wetland Crossing Length (feet) | Jurisdictional Waters of the U.S. Crossing Length (feet) (does not include wetland footage) | Area Temporarily Affected (Acre)[1] | Dominant Plants | Comments |
|---|---|---|---|---|---|---|---|---|---|---|---|---|
| 43 02.263, 106 51.869 | 187.6 | Potential playa lake | Natrona | 36N R84W NW ¼, NW ¼, S 1 | Natrona | (PABF) | 1994 NWI map review | 150 | 0 | 0.17 | Not available | Move ROW ~ 250- 300' to north along 2-track to avoid possible playa area |
| 43 02.313, 106 50.417 | 189.05 | Isolated wetland | Natrona | 36N 83W NE ¼, NW ¼, S 6 | Natrona | (PEMC) | 1994 NWI map review | 80 | 0 | 0.01 | Not available | Move ROW ~ 50' to north or south to avoid wetland |
| WUS: no riparian or wetland areas | 40 (192.10-192.5) | Stock ponds and intermittent drainage | Natrona | 36N 83W SE ¼, SE ¼, S 21, NW ¼, SW ¼, S 22 | Natrona | PUSAh/R4SBA (PUSCh, PUSAh) | 1987 COE Delineation Manual (July 2000) | 0 | 600 (parallels and crosses drainage) | 0.02 (drainage paralleled and 10' crossed) | Spikerush species (dead) | Move route 150' to north to avoid paralleling drainage and stock pond |
| 43 20.011, 106 31.466 | 45 (215.92) | Unnamed trib. to Dead Horse Creek | Natrona | 39N 81W NW ¼, SW ¼, S 24 | Camel Hump Reservoir | R4SBJ/R4SBB (R4SBA) | July 2000 aerial reconnaissance | 5 | 35 (2 feet open water) | 0.07 | Grasses | |
| 43 21.931, 106 30.798 | 46 (218.29) | N Fork Dead Horse Creek | Natrona | 39N 81W SW ¼, NE ¼, S 12 | Camel Hump Reservoir | R4SBJ (R4SBA) | 1987 COE Delineation Manual (July 2000) ~200' to east identified as R4SBJ during delineation | 0 | 10 | 0.02 | Grasses | Pools present in creek during survey; no flow |

## Table B-1 (Continued)

| Latitude (N)/ Longitude (W) (Degrees, Minutes) | Crossing Name and Number (Milepost) | Type (perennial, intermittent, ephemeral, playa) | County | Township Range Quarter/ Quarter | NWI/USGS 7.5-Minute Quadrangle | Wetland Classification Field (NWI Map) | Delineation Method (Date) | Wetland Crossing Length (feet) | Jurisdictional Waters of the U.S. Crossing Length (feet) (does not include wetland footage) | Area Temporarily Affected (Acre)[1] | Dominant Plants | Comments |
|---|---|---|---|---|---|---|---|---|---|---|---|---|
| 43 23.520, 106 28.608 | 47 (221.1) | Government Creek | Natrona | 40N 80W SW ¼, NE ¼, S 32 | Government Creek | R4SBJ (PEMA) | 1994 NWI map review; 1987 COE Delineation Manual (July 2000) ~800' to east identified area as R4SBI | 0 | 30 | 0.05 | Alkali grass | |
| 43 24.504, 106 27.767 | 222.65 | Unnamed trib. to Government Creek | Natrona | 40N 80W SW ¼, NW ¼, S 28 | Government Creek | R4SBJ/PEMA (No NWI designation/ OWUS) | 1994 NWI map review; July 2000 ground visit identified R4SBJ & PEMA~600' to east | 10 | 20 | 0.05 | Alkali grass, sedges | |
| 43 26.279, 106 26.719 | 48 (224.73) | Trib. to Dugout Creek (Lane Creek) | Natrona | 40N 80W SW ¼, NW ¼, S 15 | Government Creek | R4SBJ/ PEMC (PEMC) | 1994 NWI map review; July 2000 aerial reconnaissance identified R4SBJ/PEMC ~450' to west | 5 | 15 (2-3 feet of open water) | 0.03 | Rushes, grasses, Canada thistle, milkweed | |
| 43 26.474, 106 26.630 | 49 (225.00) | Scott Creek | Natrona | 40N 80W NW ¼, NW ¼, S 15 | Government Creek | R4SBJ (R4SBA) | 1994 NWI map review; July 2000 aerial reconnaissance identified R4SBJ ~300' to west | 0 | 20 (2-3 feet of open water) | 0.03 | Rushes, grasses, Canada thistle | |
| 43 27.26, 106 26.24 | 50 (225.86) | Trib. to Government Creek | Natrona | 40N 80W NE ¼, NW ¼, S 10 | Government Creek | R4SBA/PEMC (PEMC) | July 2000 aerial reconnaissance | 5 | 10 | 0.03 | Foxtail grass, wild licorice, rushes | |
| 43 28.994, 106 25.111 | 51 (228.21) | Trib to Dugout Creek | Natrona | 41N 80W NW ¼, NW ¼, S 36 | Government Creek | PEMC/R4SBA (R4SBA) | July 2000 aerial reconnaissance | 10 | 40 | 0.09 | Rushes, yellow clover | |

## Table B-1 (Continued)

| Latitude (N)/ Longitude (W) (Degrees, Minutes) | Crossing Name and Number (Milepost) | Type (perennial, intermittent, ephemeral, playa) | County | Township Range Quarter/ Quarter | NWI/USGS 7.5-Minute Quadrangle | Wetland Classification Field (NWI Map) | Delineation Method (Date) | Wetland Crossing Length (feet) | Jurisdictional Waters of the U.S. Crossing Length (feet) (does not include wetland footage) | Area Temporarily Affected (Acre)[1] | Dominant Plants | Comments |
|---|---|---|---|---|---|---|---|---|---|---|---|---|
| 43 29.43, 106 24.42 | 52 (L0.60) | Dugout Creek | Natrona | 41N 80W NW ¼, SE ¼, S 25 | Government Creek | R4SBJ (R4SBA) | July 2000 aerial reconnaissance | 0 | 50 | 0.09 | Russian thistle, grasses | Some ponding observed during survey; no flow |
| 43 28.34, 106 22.99 | 53 (L2.24) | Hay Draw | Natrona | 41N 79W SE ¼, SE ¼, S 31 | Government Creek | PEMC/R4SBA (R4SBA) | July 2000 aerial reconnaissance | 10 | 70 | 0.14 | Rushes | |
| 43 31.181, 106 24.840 | 54 (230.96) | Lone Tree Gulch | Johnson | 41N 80W NE ¼, SW ¼, S 13 | Dugout Ranch | PEMC/R4SBJ (R4SBA) | 1994 NWI map review; July 2000 aerial reconnaissance ~500' to the east identified this drainage as PEMC/R4SBJ | 5 | 40 (includes 4 feet open water) | 0.08 | Rushes, grasses | |
| 43 32.166, 106 24.177 | 232.0 | Unnamed trib. to Lone Tree Gulch | Johnson | 41N 80W SW ¼, NW ¼, S 7, NW ¼, SW ¼, S 7 | Dugout Ranch | WUS (No NWI designation/ OWUS) | 1994 NWI map review | 0 | 0 (Parallels drainage for 600') | 0 (Parallels drainage within 50') | Not available | Move ROW ~100' to east to avoid paralleling drainage |
| 43 33.100, 106 22.744 | 233.8 | Unnamed trib. to Dugout Creek | Johnson | 41N 79W SW ¼, NW ¼, S 5 | Dugout Ranch | (R4SBA) | 1994 NWI map review. | 0 | 0 (Parallels drainage for ~800') | 0 (Parallels drainage within 50') | Not available | Move ROW ~50' to east into road bed to avoid paralleling drainage within 50' |

## Table B-1 (Continued)

| Latitude (N)/ Longitude (W) (Degrees, Minutes) | Crossing Name and Number (Milepost) | Type (perennial, intermittent, ephemeral, playa) | County | Township Range Quarter/ Quarter | NWI/USGS 7.5-Minute Quadrangle | Wetland Classification Field (NWI Map) | Delineation Method (Date) | Wetland Crossing Length (feet) | Jurisdictional Waters of the U.S. Crossing Length (feet) (does not include wetland footage) | Area Temporarily Affected (Acre)[1] | Dominant Plants | Comments |
|---|---|---|---|---|---|---|---|---|---|---|---|---|
| 43 33.241, 106 22.651 | 55 (233.90) | Dugout Creek | Johnson | 41N 79W SW ¼, NW ¼, S 5 | Dugout Ranch | R4SBA/ PEMC (R4SBA) | 1994 NWI map review; July 2000 aerial reconnaissance ~600' to the east identified Dugout Creek as R4SBA/PEMC | 20 | 80 (~5' open water) | 0.17 | Rush, grasses | |
| 43 34.102, 106 20.726 | 56 (235.84-235.87) | Salt Creek | Johnson | 42N 79W SW ¼, NW ¼, S 34 | Dead Woman Crossing | R2US1(R2USA) | 1994 NWI map review; July 2000 COE Manual Delineation ~400' to the east identified Salt Creek as R2US1 | 10 | 250' (includes 20' open water) | 0.45 | Baltic rush, tamarix sp., alkali cordgrass, salt grass | |
| 43 35.479, 106 18.33 to 43 35.61, 106 18.09 | 57 (238.45) | Meadow Creek | Johnson | 42N 79W NW ¼, SW ¼, S 24 | Dead Woman Crossing | R5UB1/ PEM1C (R4SBA) | 1994 NWI map review; July 2000 aerial reconnaissance identified area ~700' to the east as R5UB1/ PEM1C | 15 | 50' (3' of open water ) | 0.11 | Rushes, tamarix sp., grasses | |
| WUS: no riparian or wetland areas | 59[2] (241.8-241.85) | Unnamed trib. to Meadow Creek | Johnson | 42N 78W NE ¼, NE ¼, S 7 | Sussex | R4SBA (PEMAh/ R4SBA) | 1994 NWI map review; July 2000 aerial reconnaissance area ~300' to the south identified drainage as R4SBA | 0 | 400 | 0.69 (ROW runs in drainage for 400') | Upland vegetation | ROW is located within drainage for 400'. Move ROW ~150' east or west to avoid drainage |

## Table B-1 (Continued)

| Latitude (N)/ Longitude (W) (Degrees, Minutes) | Crossing Name and Number (Milepost) | Type (perennial, intermittent, ephemeral, playa) | County | Township Range Quarter/ Quarter | NWI/USGS 7.5-Minute Quadrangle | Wetland Classification Field (NWI Map) | Delineation Method (Date) | Wetland Crossing Length (feet) | Jurisdictional Waters of the U.S. Crossing Length (feet) (does not include wetland footage) | Area Temporarily Affected (Acre)[1] | Dominant Plants | Comments |
|---|---|---|---|---|---|---|---|---|---|---|---|---|
| 43 39.492, 106 14.041 | 62 (244.63-244.67) | Trib to Carpenter Draw | Johnson | 43N 78W NW¼, NE ¼, S 33 | House Creek | PUSCh (PUSCh) | 1994 NWI map review; July 2000 aerial reconnaissance | 0 | 0 (non-jurisdictional waters of the U.S.) | 0 | Upland vegetation | Confirm that stock pond lies ~50' to south of ROW |
| 43 41.68, 106 11.46 | 63 (248.17) | House Creek | Johnson | 43N 78W NE ¼, SE ¼, S 14 | House Creek | R4SBA/PEM1C (R4SBA) | July 2000 aerial reconnaissance | 5 | 50 (includes 2' of open water) | 0.09 | Cottonwoods, rushes | Move ROW north or south to avoid trees |
| 43 44.120, 106 09.305 | 66[2] (251.60) | House Creek | Johnson | 44N 77W SW ¼, SE ¼, S 31 | House Creek | PFO1C/R4SBA (PEMC/R4SBA) | July 2000 aerial reconnaissance | 5 | 30 | 0.06 | Cottonwood species, grasses | Forested/ riparian crossing; move ROW to avoid trees |
| 43 44.898, 106 08.019 | 67 (253.02) | Dry Fork Powder River | Johnson | 44N 77W SW ¼, SE ¼, S 29 | House Creek | R4SBA (R4SBA/PEMC) | 1994 NWI map review; July 2000 aerial reconnaissance ~1200' to the south identified area as R4SBA | 0 | 10 | 0.02 | Grasses, cottonwoods | Move ROW to avoid trees |
| WUS: no riparian or wetland areas | 256.5 | Unnamed trib. to Seventeen Mile Creek | Johnson | 44N 77W NE ¼, NE ¼, S 15 | Fort Reno SE | R4SBA (No NWI designation/ OWUS) | 1994 NWI map review; July 2000 aerial reconnaissance ~800' to the southwest identified area as R4SBA | 0 | 0 (Parallels drainage for ~600') | 0 (Parallels drainage for ~600') | Upland vegetation | Move ROW ~150' to east or west to avoid drainage |
| 43 49.01, 106 03.08 | 69 (259.62) | Willow Creek | Johnson | 44N 76W SE ¼, NE ¼, S 1 | Fort Reno SE | R4SBA/PEMC (R4SBA) | July 2000 aerial reconnaissance | 5 | 25 | 0.05 | Rushes, grasses | |

[1]Acreages were determined using the following formula: 75-foot-wide construction ROW x (wetland/riparian crossing length + WUS crossing length) ÷ 43,560 (square feet in an acre) = acres of disturbance. If a 50 feet or smaller construction ROW can be used, acres affected would be smaller.

[2]Wetland numbers 58, 61, and 65 were eliminated due to ROW location modifications. Wetland number 39 did not occur at the ROW crossing proposed, based upon field delineation.

## Table B-2
## PSC $CO_2$ Pipeline Project
## Water Features Recommended For Field Review and Possible Rerouting

| Latitude (N)/ Longitude (W) (Degrees, Minutes) | Crossing Name and Number (Milepost) | Type (perennial, intermittent, ephemeral, playa) | County | Township Range Quarter/ Quarter | NWI/USGS 7.5-Minute Quadrangle | Wetland Classification Field (NWI Map) | Delineation Method (Date) | Wetland Crossing Length (Feet) | Jurisdictional Waters of the U.S. Crossing Length (feet) (does not include wetland footage) | Area Temporarily Affected (Acre)[1] | Dominant Plants | Comments |
|---|---|---|---|---|---|---|---|---|---|---|---|---|
| 42 21.2, 107 49.4 | 1 (113.04-113.11) | Isolated Wetland | Fremont | 28N 92W NE ¼, SW ¼, S 33 | Crook's Peak | PSS1C/PEMCb (PABGb, PEMC, PSSC) | 1987 COE Delineation Manual (7/6/00) | 350 (in addition, approximately 600 feet are paralleled within normal high water mark) | 0 | 0.6 | Willow, rushes, grasses | Ground-checked 7/6/00. Route as shown on Oct. 2000 POD maps. Move line ~500' to west to follow existing Exxon ROW |
| 42 21.333, 107 49.122 | 113.35 | Tributary to Crooks Creek; beaver ponds | Fremont | 28N 92 W NW ¼, SE ¼, S 33 | Crook's Peak | PSS1b (PSSC) | 1990 NWI map review: July 2000 aerial reconnaissance identified beaver ponds in area | ~450 | 0 | 0.74 | Willow | As shown on Oct. 2000 POD maps, passes through beaver pond area. Move ~300' north towards Exxon ROW to avoid |
| 42 23.928, 107 44.750 | 3 (118.6-118.8) | West Cottonwood Creek | Fremont | 28N 91W NW ¼, SW ¼, S 18 | Split Rock NW | R4SBA, PSSA (PSSA) | 1990 NWI map review: July 2000 aerial reconnaissance ~500' to south identified area as R4SBA/PSSA | 0 | 500 (parallels drainage) | 0.0 | Willow | Move ROW 100' to North to avoid paralleling drainage |
| WUS; no riparian or wetland areas | 8 (121.21) | Middle Cottonwood Creek | Fremont | 28N 91W NE ¼, SE ¼, S 9 | Split Rock NW | R4SBA (PSSA) | 1990 NWI map review; 1987 COE manual delineation (7/6/00) ~300' to south identified area as R4SBA | 0 | 500 (parallels drainage) | 0.0 | Sagebrush, grasses, cottonwood | Poor quality riparian ove ~ 200-300' to south toward paralleling drainage |
| 42 37.731, 107 14.797 | 150.1 | Dry Creek | Natrona | 31N 87W NW ¼, SW ¼, S 27 | Saddle Rock | (PUBFx) | 1991 NWI map review | 0 | 0 (~50' in non-jurisdictional stock pond) | 0 (0.09 acre of disturbance in non-jurisdictional stock pond) | Not available | Move line ~50' to north or south to avoid pond |

## Table B-2 (Continued)

| Latitude (N)/ Longitude (W) (Degrees, Minutes) | Crossing Name and Number (Milepost) | Type (perennial, intermittent, ephemeral, playa) | County | Township Range Quarter/ Quarter | NWI/USGS 7.5-Minute Quadrangle | Wetland Classification Field (NWI Map) | Delineation Method (Date) | Wetland Crossing Length (Feet) | Jurisdictional Waters of the U.S. Crossing Length (feet) (does not include wetland footage) | Area Temporarily Affected (Acre)[1] | Dominant Plants | Comments |
|---|---|---|---|---|---|---|---|---|---|---|---|---|
| 42 39.232, 107 12.677 | 152.8 | Unnamed trib. to Cottonwood Creek | Natrona | 31N 87W NW ¼, NE ¼, S 23, SE ¼, SE ¼, S 14 | Saddle Rock | R4SBA (No NWI designation/ OWUS) | 1991 NWI map review; area ~500' to east was identified asR4SBA during July 2000 aerial reconnaissance | 0 | 0 (Parallels drainage for ~800') | 0.0 (parallels drainage for 800') | Upland vegetation | Move ROW ~50-100' to east or west to avoid paralleling drainage |
| 42 46.065, 107 07.478 | 158.01 | Isolated spring | Natrona | 32N 86W NW ¼, SW ¼, S 34, NE ¼, SW ¼, S 34 | Horse Creek Springs | PEM1B (No NWI designation) | July 2000 aerial reconnaissance | 50 x 100 | 0 | 0.11 | Sedges and rushes, grasses | Spring associated with Horse Creek. Move line ~100' to east to avoid |
| WUS: no riparian or wetland areas | 30 (165.05) | Trib. to Soap Creek | Natrona | 32N 85W SE ¼, NW ¼, S 5 | Eightmile Draw | R4SBA (PEMC) | 1991 NWI map review; area ~150' to west observed during July 2000 aerial reconnaissance | 0 | 0 (parallels drainage for 1,300') | 0 (parallels drainage for more than 500') | Upland vegetation | Move ROW ~50' to east to avoid paralleling drainage |
| 42 51.651, 107 0.828; WUS: no riparian or wetland areas | 171.36 | Unnamed trib. to Casper Creek and stock tank | Natrona | 33N 85W SE ¼, NW ¼, S 3 SW ¼, NE ¼, S 3 | Eightmile Draw | R4SBA/PEM (No NWI designation/ OWUS) | 1991 NWI map review; R4SBA observed during July 2000 aerial reconnaissance ~700' to west | 0 | 10 | 0.02 | Grasses | PEM may occur at crossing; created by stock tank drainage; move ROW ~50' east or west to avoid tank |
| 42 52.883, 107 0.670 | 35 (172.87-172.90) | Isolated Wetland/ stock pond | Natrona (Private) | 34N 85W SW ¼, SE ¼, S 27 | Gaylord Reservoir | PABFh (PABFh) | 1991 NWI map review; area ~800' to the west observed during July 2000 aerial reconnaissance | 0 | 0 (non-jurisdictional stock pond) | 0 | Grasses | Confirm that ROW avoids stock pond Pond lies adjacent to sage grouse lek location SG-34-85-34-02-14 |
| 42 55.308, 106 59.828 | 175.80 | Stock pond south of Square Top Butte (located east of ROW PI) | Natrona | 34N 85W NE ¼, NW ¼, S 14 | Square Top Butte | PUBFh (PUBFh) | 1991 NWI map review; area ~900' to the west of ROW observed during July 2000 aerial reconnaissance | 0 | 0 | 0 (non-jurisdictional) | Upland vegetation | Confirm that stock pond lies at least 50' east of ROW |
| 42 57.412, 106 59.162 | 178.3 | Isolated wetland/ stock pond | Natrona | 35N 85W SE ¼, SE ¼, S 35 | Square Top Butte | (PUSCh) | 1991 NWI map review | 0 | 0 (non-jurisdictional stock pond) | 0 (non-jurisdictional) | Not available | Move ROW ~100' to east or west to avoid stock pond |

## Table B-2 (Continued)

| Latitude (N)/ Longitude (W) (Degrees, Minutes) | Crossing Name and Number (Milepost) | Type (perennial, intermittent, ephemeral, playa) | County | Township Range Quarter/ Quarter | NWI/USGS 7.5-Minute Quadrangle | Wetland Classification Field (NWI Map) | Delineation Method (Date) | Wetland Crossing Length (Feet) | Jurisdictional Waters of the U.S. Crossing Length (feet) (does not include wetland footage) | Area Temporarily Affected (Acre)[1] | Dominant Plants | Comments |
|---|---|---|---|---|---|---|---|---|---|---|---|---|
| 42 59.271, 106 57.918 | 180.6 | Isolated wetland/ stock pond | Natrona | 35N 84W NW ¼, SW ¼, S 19 | Square Top Butte | (PEMah) | 1991 NWI map review | 200 | 0 (non-jurisdictional stock pond) | 0.34 | Not available | Move ROW ~100' to east to avoid pond |
| 43 02.263, 106 51.869 | 187.6 | Potential playa lake | Natrona | 36N R84W NW ¼, NW ¼, S 1 | Natrona | (PABF) | 1994 NWI map review | 150 | 0 | 0.17 | Not available | Move ROW ~ 250- 300' to north along 2-track to avoid possible playa area |
| 43 02.313, 106 50.417 | 189.05 | Isolated wetland | Natrona | 36N 83W NE ¼, NW ¼, S 6 | Natrona | (PEMC) | 1994 NWI map review | 80 | 0 | 0.01 | Not available | Move ROW ~ 50' to north or south to avoid wetland |
| WUS: no riparian or wetland areas | 40 (192.10-192.5) | Stock ponds and intermittent drainage | Natrona | 36N 83W SE ¼, SE ¼, S 21, NW ¼, SW ¼, S 22 | Natrona | PUSAh/R4SBA (PUSCh, PUSAh) | 1987 COE Delineation Manual (July 2000) | 0 | 600 (parallels and crosses drainage) | 0.02 (drainage paralleled and 10' crossed) | Spikerush species (dead) | Move route 150' to north to avoid paralleling drainage and crossing stock pond |
| 43 32.166, 106 24.177 | 232.0 | Unnamed trib. to Lone Tree Gulch | Johnson | 41N 80W SW ¼, NW ¼, S 7, NW ¼, SW ¼, S 7 | Dugout Ranch | WUS (No NWI designation/ OWUS) | 1994 NWI map review | 0 | 0 (Parallels drainage for 600') | 0 (Parallels drainage within 50') | Not available | Move ROW ~100' to east to avoid paralleling drainage |
| 43 33.100, 106 22.744 | 233.8 | Unnamed trib. to Dugout Creek | Johnson | 41N 79W SW ¼, NW ¼, S 5 | Dugout Ranch | (R4SBA) | 1994 NWI map review. | 0 | 0 (Parallels drainage for ~800') | 0 (Parallels drainage within 50') | Not available | Move ROW ~50' to east into road bed to avoid paralleling drainage within 50' |
| WUS: no riparian or wetland areas | 59[2] (241.8-241.85) | Unnamed trib. to Meadow Creek | Johnson | 42N 78W NE ¼, NE ¼, S 7 | Sussex | R4SBA (PEMAh/ R4SBA) | 1994 NWI map review; July 2000 aerial reconnaissance area ~300' to the south identified drainage as R4SBA | 0 | 400 | 0.69 (ROW runs in drainage for 400') | Upland vegetation | ROW is located within drainage for 400'. Move ROW ~150' east or west to avoid drainage |
| 43 39.492, 106 14.041 | 62 (244.63-244.67) | Trib to Carpenter Draw | Johnson | 43N 78W NW¼, NE ¼, S 33 | House Creek | PUSCh (PUSCh) | 1994 NWI map review; July 2000 aerial reconnaissance | 0 | 0 (avoided) | 0 | Upland vegetation | Confirm that stock pond lies ~50' to south of ROW |

## Table B-2 (Continued)

| Latitude (N)/ Longitude (W) (Degrees, Minutes) | Crossing Name and Number (Milepost) | Type (perennial, intermittent, ephemeral, playa) | County | Township Range Quarter/ Quarter | NWI/USGS 7.5-Minute Quadrangle | Wetland Classification Field (NWI Map) | Delineation Method (Date) | Wetland Crossing Length (Feet) | Jurisdictional Waters of the U.S. Crossing Length (feet) (does not include wetland footage) | Area Temporarily Affected (Acre)[1] | Dominant Plants | Comments |
|---|---|---|---|---|---|---|---|---|---|---|---|---|
| 43 41.68, 106 11.46 | 63 (248.17) | House Creek | Johnson | 43N 78W NE ¼, SE ¼, S 14 | House Creek | R4SBA/PEM1C (R4SBA) | July 2000 aerial reconnaissance | 5 | 50 (includes 2' of open water) | 0.09 | Cottonwood, rushes | Move ROW 50 to 100' north or south to avoid trees. Site lies within prairie dog town |
| 43 44.120, 106 09.305 | 66[2] (251.60) | House Creek | Johnson | 44N 77W SW ¼, SE ¼, S 31 | House Creek | PFO1C/R4SBA (PEMC/R4SBA) | July 2000 aerial reconnaissance | 5 | 30 | 0.06 | Cottonwood species, grasses | Forested/ riparian crossing; move ROW to south 100' to avoid trees. Unidentified owl nest ~200 to north of ROW ((OWL44-77-31-01-N) |
| 43 44.898, 106 08.019 | 67 (253.02) | Dry Fork Powder River | Johnson | 44N 77W SW ¼, SE ¼, S 29 | House Creek | R4SBA (R4SBA/PEMC) | 1994 NWI map review; July 2000 aerial reconnaissance ~1200' to the south identified area as R4SBA | 0 | 10 | 0.02 | Grasses, cottonwoods | Move ROW ~50-100' to north or south to avoid trees. Site lies in prairie dog town |
| WUS: no riparian or wetland areas | 256.5 | Unnamed trib. to Seventeen Mile Creek | Johnson | 44N 77W NE ¼, NE ¼, S 15 | Fort Reno SE | R4SBA (No NWI designation/ OWUS) | 1994 NWI map review; July 2000 aerial reconnaissance ~800' to the southwest identified area as R4SBA | 0 | 0 (Parallels drainage for ~600') | 0 (Parallels drainage for ~600') | Upland vegetation | Move ROW ~150' to east or west to avoid paralleling drainage |

[1]Acreages were determined using the following formula: 75-foot-wide construction ROW x (wetland/riparian crossing length + WUS crossing length) ÷ 43,560 (square feet in an acre) = acres of disturbance. If a 50 feet or smaller construction ROW can be used, acres affected would be smaller.

[2]Wetland numbers 58, 61, and 65 were eliminated due to ROW location modifications. Wetland number 39 did not occur at the ROW crossing proposed, based upon field delineation.

**Table B-3**
**Wyoming State Noxious Weed List***

| Scientific Name | Common Name |
|---|---|
| *Agropyron repens* | Quackgrass |
| *Ambrosia tomentosa* | Skeletonleaf bursage |
| *Arctium minus* | Common burdock |
| *Cardaria draba* | Hoary cress (whitetop) |
| *Carduus acanthoides* | Plumeless thistle |
| *Carduus nutans* | Musk thistle |
| *Centaurea diffusa* | Diffuse knapweed |
| *Centaurea maculosa* | Spotted knapweed |
| *Centaurea repens* | Russian knapweed |
| *Chrysanthemum leucanthemum* | Oxeye daisy |
| *Cirsium arvense* | Canada thistle |
| *Convolvulus arvensis* | Field bindweed |
| *Cynoglossum officinale* | Houndstongue |
| *Euphorbia esula* | Leafy spurge |
| *Isatis tinctoria* | Dyers woad |
| *Lepidium latifolium* | Perennial pepperweed (Giant whitetop) |
| *Linaria genistifolia* ssp. *dalmatica* | Dalmation toadflax |
| *Linaria vulgaris* | Yellow toadflax |
| *Lythrum salicaria* | Purple loosestrife |
| *Onopordum acanthium* | Scotch thistle |
| *Sonchus arvensis* | Perennial sowthistle |
| *Tamarix chinesis* | Tamarisk / Salt cedar |

*The following additional species also have been identified for listing on the State Noxious Weed List by Campbell, Johnson, or Natrona Weed Districts:

| | |
|---|---|
| *Glycyrrhiza lepidota* | Wild licorice |
| *Halogeton glomeratus* | Halogeton |
| *Tribulus terrestris* | Puncturevine |
| *Verbascum thapus* | Common mullein |

## Table B-4
## Weed Populations Identified by Aerial Reconnaissance Along Petro Source Right-of-Way July 2000

| Approximate Latitude (North)/ Longitude (West) | Approximate Milepost | Weed Species | Population Size (square feet unless otherwise noted) | Percent of Population in ROW |
|---|---|---|---|---|
| 42.47495, 107.48000 | 134.0-134.1 | Russian knapweed | 600 | 90 |
| 42.46950, 107.47733 | 134.0 | Leafy spurge | 10 plants | 100 |
| 42.62837, 107.24537 | 150.1 - 150.28 (Dry Creek) | Leafy spurge | 500 | 100 |
| 42.70072, 107.12560 | 158.0 | Canada thistle | Scattered plants | 100 |
| 42.97127, 106.97897 | 179.35 | Russian knapweed | 15 | 100 |
| 42.96679, 106.98050 | 179.0 (Middle Fork of Casper Creek) | Wild licorice | 20 | 100 |
| 43.01320, 106.95420 to 43.02918, 106.90957 | 182.0 – 185.2 | Canada thistle | Scattered plants | 50 |
| 43.03495, 106.86129 | 187.5 | Canada thistle | 15 | 100 |
| 43.12488, 106.71298 | 197.95 | Canada thistle | 25 | 100 |
| 43.16288, 106.65877 | 202.0 | Canada thistle | 5 | 100 |
| 43.25392, 106.56752 | 210.2 | Canada thistle | 20 | 100 |
| 43.36517, 106.51433 | 218.29 | Wild licorice | 5 | 100 |
| 43.40554, 106.46546 | 222.4 (Government Creek) | Halogeton, Canada thistle, Salt cedar | 15 | 100 |
| 43.40883, 106.46250 | 222.85 | Canada thistle, Halogeton | 5 | 100 |
| 43.43757, 106.44515 | 224.78 (Scott Creek) | Canada thistle | 10 | 50 |
| 43.44167, 106.44500 | 225.0 | Canada thistle | 15 | 100 |
| 43.45433, 106.43733 | 225.86 | Wild licorice | 30 | 75 |
| 43.45617, 106.43583 | 226 | Wild licorice | Scattered plants | 100 |
| 43.49050, 106.40700 | 0.5 (Lateral) | Salt cedar | 12 plants | 100 |
| 43.48367, 106.39700 to 43.47233, 106.38317 | 1.2 – 2.1 (Lateral) | Scotch thistle, mullein | Scattered plants | 75 |
| 43.46625, 106.33660 | 4.95 (Lateral) | Salt cedar | 12 | 50 |
| 43.44600, 106.33650 | 5.0 (Lateral) | Salt cedar | 10 | 100 |
| 43.43238, 106.31075 | 6.7 (Lateral) | Russian knapweed | 40 | 25 |
| 43.54667, 106.38533 to 43.57484, 106.33191 | 233.5 – 236.8 | Scotch thistle | Scattered plants | 10 |
| 43.58181, 106.32249 | 237.3 | Scotch thistle | 15 | 100 |
| 43.59140, 106.30590 to 43.63500, 106.26067 | 238.45 to 242.5 (Meadow Creek) | Scotch thistle | Scattered plants | 50 |
| 43.59140, 106.30590 | 238.45 | Salt cedar | Scattered plants | 50 |
| 43.65850, 106.23500 to 43.66117, 106.24550 | 244.8-244.09 | Scotch thistle, Salt cedar | 12 | 100 |
| 43.68409, 106.20848 | 247.0 | Scotch thistle | Scattered plants | 50 |
| 43.69467, 106.19100 | 248.17 | Scotch thistle | Scattered along creek bottom | 100 |
| 43.70240, 106.18290 | 248.82 | Scotch thistle | 1 acre | 25 |
| 43.73584, 106.15385 | 251.6 | Scotch thistle | 10 | 100 |
| 43.81683, 106.05133 | 259.62 | Salt cedar | 3 plants | 100 |

## Table B-5
## Weed Population Locations Identified During Sensitive Plant Ground Surveys
## June/July 2000

| Species | Approximate Milepost Locations | Latitude/ Longitude Coordinates | |
|---|---|---|---|
| Canada thistle | 158.5 | 42.70422 | 107.11695 |
| | 163.1 | 42.74837 | 107.06283 |
| | 166.9 | 42.79790 | 107.03027 |
| | McFarland Ranch at 180.5 | 42.98809 | 106.96561 |
| | 220.5 (Access Road 9) | 43.39059<br>43.39273 | 106.49390<br>106.49483 |
| | 243.5 (Access Road 15) | 43.64757<br>43.64731 | 106.26852<br>106.26853 |
| | 259.5 | 43.81548 | 106.05359 |
| | Lateral MP 6.7 | 43.43155 | 106.30830 |
| Whitetop | L Cross Ranch at 134.2 | 42.47900<br>42.47969 | 107.47826 to<br>107.47739 |
| Leafy spurge | L Cross Ranch at 133.5 (Sweetwater River) | 42.47335 | 107.48825 |
| | Bug Ranch at 150.3 | 42.62819<br>42.62861 | 107.24747 to<br>107.24684 |
| | Horse Creek Spring at 158.5 | 42.70422 | 107.11695 |
| Musk thistle | 163.1 | 42.74837 | 107.06283 |
| Russian knapweed | L Cross Ranch at 134.2 | 42.47873 | 107.47846 |
| | McFarland Ranch at 179.5 | 42.97127 | 106.97897 |
| Scotch thistle | Dugout Ranch at 233.5 | 43.54915 | 106.38182 |
| | Lateral MP 0.5 | 43.49038<br>43.48987 | 106.40668<br>106.40587 |
| | Lateral MP 1.2 | 43.48295 | 106.39641 |
| | 240.2 to 241.0 (Access Road 15) | 43.62474<br>43.61214 | 106.28355 to<br>106.28614 |
| | 241.6-242.0 (Access Road 15) | 43.62766<br>43.63052 | 106.27845 to<br>106.27060 |
| | 242.2 (Access Road 15) | 43.63789 | 106.26918 |
| | 238.45 to 239.0 | 43.59140<br>43.59581 | 106.30590 to<br>106.29780 |
| | 259.5 | 43.81548 | 106.05359 |
| Salt cedar | McFarland Ranch at 180.5 | 42.98795 | 106.96555 |
| | Lateral MP 0.5 | 43.49054 | 106.40719 |
| | Lateral MP 6.7 | 43.43155 | 106.30830 |
| | 238.5 | 43.59305 | 106.30320 |