DECISION RECORD
Environmental Assessment (EA), WY-070-EA13-224
Iberlin 1-9H and Iberlin 1-9TH Horizontal Oil Wells, Plan of Development (POD)
Peak Powder River Resources, LLC's
Bureau of Land Management, Buffalo Field Office, Wyoming

DECISION. The BLM approves Peak Powder River Resources, LLC's (Peak's) Iberlin 1-9H and Iberlin 1-9TH gas and oil well application for permit to drill (APD) as described in Alternative B of the environmental assessment (EA), WY-070-EA13-224. This approval includes the well's support facilities.

Compliance. This decision complies with:

- Federal Land Policy and Management Act of 1976 (FLPMA) (43 USC 1701); DOI Order 3310.
- Mineral Leasing Act of 1920 (MLA) (30 U.S.C. 181); to include Onshore Order No. 1.
- National Environmental Policy Act of 1969 (NEPA) (42 USC 4321).
- National Historic Preservation Act of 1966 (NHPA) (16 USC 470).
- Buffalo Resource Management Plan (RMP) 1985, Amendments 2001, 2003, 2011.

BLM summarizes the details of the approval of Alternative B, below. The EA includes the project description, including specific changes made at the onsites, and site-specific mitigation measures.

Well Site. BLM approves the following APDs and support facilities:

Well Name & Number	Qtr	Sec	Twp	Rng	Lease #	Status
Iberlin 1-9H	SESW	9	42N	74W	WYW127711	APD
Iberlin 1-9TH	SESW	9	42N	74W	WYW127711	APD

Limitations: There are no denials or deferrals. Also see the conditions of approval (COAs).

THE FINDING OF NO SIGNIFICANT IMPACT (FONSI). Analysis of Alternative B of the EA, WY-070-EA13-224, and the FONSI, both incorporated here by reference, found Devon's proposal for the Iberlin 1-9H and Iberlin 1-9TH will have no significant impacts on the human environment, beyond those described in the PRB FEIS. There is no requirement for an EIS.

COMMENT OR NEW INFORMATION SUMMARY. BLM posted the proposed APD for 30 days, received no comments, and then internally scoped it. BLM's experience in the PRB (outside of the Fortification Creek Planning Area) revealed little public input or new issue discovery other than those revealed after public scoping during development of the PRB FEIS. Since development of Peak's Iberlin 1-9H and Iberlin 1-9TH proposal BFO received recommendations for management of Greater Sage-Grouse (GSG) populations and population viability analysis.

DECISION RATIONALE. BLM bases the decision authorizing the selected project on:

1. BLM and Peak included mitigation measures to reduce environmental impacts while meeting the BLM's need. For a complete description of all site-specific COAs, see the COAs. The PRB FEIS analyzed and predicted that the PRB oil and gas development would have significant impacts to the region's GSG population. The impact of this development cumulatively contributes to the potential for local extirpation yet its effect is acceptable because it is outside priority habitats and is within the parameters of the PRB FEIS and ROD and current BLM and Wyoming GSG conservation strategies.

2. BLM adopts the analysis and condition of approval for burrowing owl conservation from the similarly situated sagebrush and short grass prairie found in the PRB's Thunder Basin National Grassland Land and RMP, 2002, 2006, pp. 1-13 to 1-22; the supporting FEIS, 2002, and its Records

of Decision, 2002, p. D-15, 2006. This is the least restrictive COA for burrowing owl conservation benefiting the owl and this project.

3. Peak will conduct operations to minimize adverse effects to surface and subsurface resources, prevent unnecessary surface disturbance, and conform to currently available technology and practice.

4. The selected alternative will help meet the nation's energy needs, and help stimulate local economies by maintaining workforce stability.

5. Peak committed to:
   - Comply with the approved APD, applicable laws, regulations, orders, and notices to lessees.
   - Obtain necessary permits from agencies.
   - Offer water well agreements to the owners of record for permitted wells.
   - Incorporate several measures to alleviate resource impacts into their submitted surface use plan and drilling plan.

6. Peak certified it has a surface access agreement or posted a bond.

7. The project is clearly lacking in wilderness characteristics as there is no federally owned surface.

8. This APD is pursuant to the Mineral Leasing Act for the purpose of exploring or developing oil or gas and do not satisfy the categorical exclusion directive of the Energy Policy Act of 2005, Section 390 because the proposed drilling is at a site where drilling occurred more than 5 years prior.

ADMINISTRATIVE REVIEW AND APPEAL. This decision is subject to administrative review according to 43 CFR 3165. Request for administrative review of this decision must include information required under 43 CFR 3165.3(b) (State Director Review), including all supporting documentation. Such a request must be filed in writing with the State Director, Bureau of Land Management, P.O. Box 1828, Cheyenne, Wyoming 82003, no later than 20 business days after this Decision Record is received or considered to have been received. Parties adversely affected by the State Director's decision may appeal that decision to the Interior Board of Land Appeals, as provided in 43 CFR 3165.4.

Acting Field Manager: _____ Date: 8/16/13

FINDING OF NO SIGNIFICANT IMPACT
Environmental Assessment (EA), WY-070-EA13-224
Iberlin 1-9H and Iberlin 1-9TH Horizontal Oil Wells, Plan of Development (POD)
Peak Powder River Resources, LLC's
Bureau of Land Management, Buffalo Field Office, Wyoming

FINDING OF NO SIGNIFICANT IMPACT (FONSI). Based on the information in the EA, WY-070-EA13-224, which BLM incorporates here reference; I find that: (1) the implementation of Alternative B will not have significant environmental impacts beyond those addressed in the Buffalo Final Environmental Impact Statement (FEIS) 1985, and the Powder River Basin (PRB) FEIS, 2003 to which the EA tiers; (2) Alternative B conforms to the Buffalo Field Office (BFO) Resource Management Plan (RMP) (1985, 2001, 2003, 2011); and (3) Alternative B does not constitute a major federal action having a significant effect on the human environment. Thus an EIS is not required. I base this finding on consideration of the Council on Environmental Quality's (CEQ) criteria for significance (40 CFR 1508.27), with regard to the context and to the intensity of the impacts described in the EA, and Interior Department Order 3310.

CONTEXT. Mineral development is a common PRB land use, sourcing over 42% of the nation's coal. The PRB FEIS foreseeable development analyzed the development of 54,200 wells. The additional development analyzed in Alternative B is insignificant in the national, regional, and local context.

INTENSITY. The implementation of Alternative B will result in beneficial effects in the forms of energy and revenue production however; there will also be adverse effects to the environment. Design features and mitigation measures included in Alternative B will minimize adverse environmental effects. The preferred alternative does not pose a significant risk to public health and safety. The geographic area of project does not contain unique characteristics identified in the 1985 RMP, 2003 PRB FEIS, or other legislative or regulatory processes. BLM used relevant scientific literature and professional expertise in preparing the EA. The scientific community is reasonably consistent with their conclusions on environmental effects relative to oil and gas development. Research findings on the nature of the environmental effects are not highly controversial, highly uncertain, or involve unique or unknown risks. The PRB FEIS predicted and analyzed oil development of the nature proposed with this project and similar projects. The selected alternative does not establish a precedent for future actions with significant effects. The proposal may relate to the PRB Greater Sage-Grouse and its habitat decline having cumulative significant impacts; yet the small size of this project is within the parameters of the impacts in the PRB FEIS. There are no cultural or historical resources present that will be adversely affected by the selected alternative. The project area is clearly lacking in wilderness characteristics as there is no federal surface. No species listed under the Endangered Species Act or their designated critical habitat will be adversely affected. The selected alternative will not have any anticipated effects that would threaten a violation of federal, state, or local law or requirements imposed for the protection of the environment.

ADMINISTRATIVE REVIEW AND APPEAL. This finding is subject to administrative review according to 43 CFR 3165. Request for administrative review of this finding must include information required under 43 CFR 3165.3(b) (State Director Review), including all supporting documentation. Such a request must be filed in writing with the State Director, Bureau of Land Management, P.O. Box 1828, Cheyenne, Wyoming 82003, no later than 20 business days after this FONSI is received or considered to have been received. Parties adversely affected by the State Director's finding may appeal that finding to the Interior Board of Land Appeals, as provided in 43 CFR 3165.4.

Acting Field Manager: _____ Date: 8/16/13

ENVIRONMENTAL ASSESSMENT (EA), WY-070-EA13-224
Iberlin 1-9H and Iberlin 1-9TH Horizontal Oil Wells, Plan of Development
Peak Powder River Resources, LLC's
Bureau of Land Management, Buffalo Field Office, Wyoming

1. INTRODUCTION

BLM provides an EA for Peak Powder River Resources, LLC's (Peak) Iberlin 1-9H and Iberlin 1-9TH applications for permit to drill (APDs) using standard jurisdiction of federal lands: with fee surface over federal minerals. This site-specific analysis tiers into and incorporates by reference the information and analysis in the Final Environmental Impact Statement and Proposed Plan Amendment for the Powder River Basin Oil and Gas Project (PRB FEIS), WY-070-02-065, 2003 and the PRB FEIS Record of Decision (ROD) per 40 CFR 1508.28 and 1502.21. One may review these documents at the BLM Buffalo Field Office (BFO) and on our website: http://www.blm.gov/wy/st/en/field_offices/Buffalo/bfoplan.html. These APDs are pursuant to the Mineral Leasing Act for the purpose of exploring or developing oil or gas and do not satisfy the categorical exclusion directive of the Energy Policy Act of 2005, Section 390 because the proposed drilling is at a site where drilling occurred more than 5 years prior.

Congress made a 4-part process for federal fluid mineral decisions under the long-term needs of multiple-use. First is the land use / resource management plan (RMP); here the PRB FEIS and ROD amendment to the BFO RMP. Second are the decisions of whether and, if so, under what conditions, to lease lands for fluid mineral development. Courts held leasing decisions are an almost irrevocable resource commitment. Third, (this phase) is deciding on the proposed APDs: the site-specific analysis, and mitigation. Fourth is the monitoring and reclamation of wells and their features. (Pendery 2010)

1.1. Background

Peak submitted the Iberlin 1-9H and Iberlin 1-9TH proposal on November 14, 2011to the BFO to produce oil and natural gas from federally managed fluid mineral bearing formations of the PRB, covered by privately owned lands with rolling hills, broad bottom drainages and some steep slopes.

- January 24, 2013: BLM received the Iberlin 1-9H and Iberlin 1-9TH notices of staking (NOSs).
- January 25, 2013: BLM posted the Iberlin 1-9H and Iberlin 1-9TH NOS.
- February 20, 2013: BFO assigned the Iberlin 1-9H and Iberlin 1-9TH NOS.
- March 13, 2013: BLM conducted onsite visits to evaluate the proposal and modify it as necessary to alleviate environmental impacts.
- April 22, 2012: Peak submitted Iberlin 1-9H and Iberlin 1-9TH APDs to the BFO.
- April 23, 2012: BLM sent Iberlin 1-9H and Iberlin 1-9TH a component review letter to Peak.
- May 29, 2013: BLM conducted a second onsite visits to review the field staking following the changes made following the initial onsite visit.
- May 31, 2013: BLM sent Peak the Post onsite deficiency letter identifying Onshore Order No. 1 deficiencies for the 2 APDs
- June 26, 2013: Peak submitted additional information and revisions to address the APD deficiencies.
- July 20, 2013: BLM requested additional information from Peak to satisfy Onshore Order No. 1 deficiencies.
- June 24, 2013: Peak submitted remaining information to address the APD deficiencies for complete APD packages.

1.2. Need for the Proposed Project

BLM's need for this project is to determine whether, how, and under what conditions to support the Buffalo Resource Management Plan's (RMP) goals, objectives, and management actions (2003

Amendment) with allowing the exercise of the operator's conditional lease rights to develop fluid minerals on federal leases. APD information is an integral part of this EA, which BLM incorporates here by reference. Conditional fluid mineral development supports the RMP and the Mineral Leasing Act of 1920, the Federal Land Policy Management Act (FLPMA), and other laws and regulations.

1.3. Decision to be Made

The BLM will decide whether or not to approve the proposed development, and if so, under what terms and conditions agreeing with the Bureau's multiple use mandate, environmental protection, and RMP.

1.4. Scoping and Issues

BFO external scoping included a 30 day posting of proposed APDs and the EA's timely publication on the BFO website. Previously BFO conducted extensive external scoping for the PRB FEIS - discussed on p. 2-1 of the PRB FEIS and on p. 15 of the PRB ROD. This project is similar in scope to other fluid mineral development the BFO analyzed. External scoping is unlikely to identify new issues, as verified with recent fluid mineral EAs BLM recently externally scoped. External scoping of the horizontal drilling in the Hornbuckle project EA, WY-060-EA11-181, 2011, in the PRB area received 2 comments, revealing no new issues. (BLM incorporates by reference those portions of the Samson EA that describe and analyze hydraulic fracturing and its effects on other resource issues.) External scoping in 2010 and 2011 for a proposed RMP amendment revealed no new issues outside of geographically-specific ones.

The BFO interdisciplinary team (ID team) conducted internal scoping by reviewing the proposed development and project location to identify potentially affected resources and land uses. This EA will not discuss resources and land uses that are either not present, not affected, or that the PRB FEIS adequately addressed. The ID team identified important issues for the affected resources to focus the analysis. This EA addresses the project and its site-specific impacts that were unknown and unavailable for review at the time of the PRB FEIS analysis to help the decision maker come to a reasoned decision. Project issues include:

- Air quality
- Soils and vegetation
- Water: ground water, quality, and quantity of produced water.
- Wildlife: raptor productivity, migratory birds, special status species
- Cultural: National Register eligible sites

2.1. Alternative A – No Action

The no action alternative would deny this APD requiring the operator to resubmit an APD that complies with statutes and the reasonable measures in the PRB RMP Record of Decision (ROD) in order to lawfully exercise conditional lease rights. The PRB FEIS considered a no action alternative, pp. 2-54 to 2-62. The BLM keeps the no action alternative current using the aggregated effects analysis approach – tiering to or incorporating by reference the analyses and developments approved by the subsequent NEPA analyses for adjacent and intermingled developments to the proposal area.

2.2. Alternative B Proposed Action (Proposal)

Project Name: Iberlin 1-9H and Iberlin 1-9TH

Well Name/#/Lease/Location:

Well Name & Number	Qtr	Sec	Twp	Rng	Lease #	Status
Iberlin 1-9H	SESW	9	42N	74W	WYW127711	APD
Iberlin 1-9TH	SESW	9	42N	74W	WYW127711	APD

Operator/Applicant: Peak Energy Production Company, LLC

Surface Owner: The proposal includes an area of approximately 580 acres which are 100% privately owned surface estate. Iberlin Ranch LP is the sole surface owner of the property. See Figure 2.1 below.

Overview: Company proposes drilling and developing 2 horizontal oil wells into federal mineral estate from a single new proposed well pad location. The proposed well is 18 miles west of Wright, Campbell County, Wyoming. The primary objective of the Iberlin 1-9H is to drill to the Shannon formation at 9,925-9,975 feet total vertical distance. The surface hole location is SESW, Section 9, T42N/ R74W. The bottom hole location is NENW Section 9, T42N/ R74W. See Figure 2.1 below.

Drilling, Construction and Production Design Features Include:

- Peak anticipates completing drilling and construction in 2 years. Drilling and construction is year-round in the region. Weather may cause delays but delays rarely last multiple weeks. Timing limitations in the form of conditions of approval (COAs) and/or agreements with surface owners may impose longer temporal restrictions.
- A road network consisting of 1,404 feet of proposed crown and ditch road with 16 foot running surface.
- 2,093 feet of overhead power line network and 1 power meter.
- Construction of a temporary water storage tank 150 feet in diameter and 12 feet high (41,000 bbls capacity) for drilling, completion and hydraulic stimulation of the well.
- Hydraulic stimulation using 12-20, 500 barrel (bbl) hydraulic fracturing (HF) tanks on location for:
  - storage vessels to heat HF water,
  - store and mixing of HF chemicals prior to pumping down hole
  - Storage of HF flow back fluids for disposal at an authorized off site facility.
- Potential production facilities including 2 pumping unit (1 for each well), a 4 tank battery, and 2 heater treater and separator units on the well pad and placed on the cut portion of the well location.
- All engines will be equipped with an adequate muffler system, decibel level not to exceed 50 decibels at sensitive receptors (e.g. raptor nests, GSG nesting habitat)
  - An on location drilling mud system comprised of a closed loop mud system utilizing four, 500bbl HF tanks and one, 6,600 square foot, L-shaped, lined cutting pit 10 deep.
- There will be no pits at the producing oil well location.

For a detailed description of design features listed in Table 2.1 below and construction practices associated with the proposed project, refer to the master surface use plan (MSUP) and drilling plan included with the APDs. Also see the subject APDs for maps showing the proposed well location and associated facilities described above.

Table 2.1. Disturbance Summary for Iberlin 1-9H and Iberlin 1-9TH well:

Facility	Number or Miles	Disturbance	Interim Disturbance
Engineered Well Pad	1	6.01 acres	3.04 acres
Improved Roads No Corridor	 1,404 feet	 1.61 acres	0.58 acres
Proposed Overhead Powerline	2,093 feet	1.44 acres	1.44 acres
	Total Surface Disturbance	**9.06 acres**	**5.06 acres**

Best management practices to be implemented are in the Iberlin 1-9H and Iberlin 1-9TH surface use plan (SUP) and mitigation measures to be applied are included in the BLM conditions of approval (COAs). BLM incorporated and analyzed the implementation of committed mitigation measures in the MSUP and drilling plan, in addition to the COAs in the PRB FEIS ROD, as well as changes made at the onsite. Additionally, the operator, in their APDs, committed to:

1. Comply with the approved APDs, applicable laws, regulations, orders, and notices to lessees.
2. Obtain necessary permits from agencies.

Figure 2.1. Surface and Bottom Hole Locations for Iberlin 1-9H and Iberlin 1-9TH Well

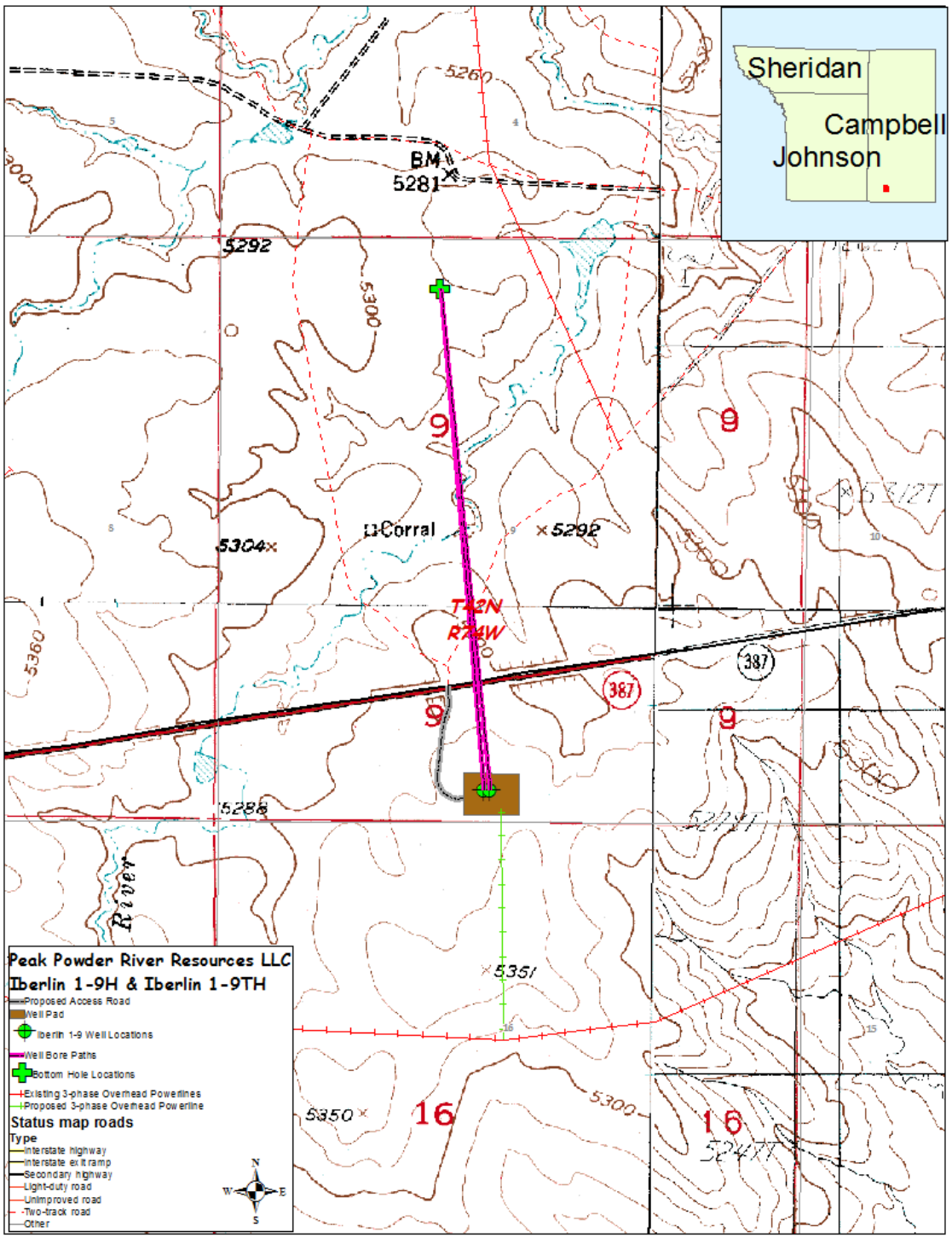

Peak estimates that during the drilling phase of each individual well (a 6-8 week period) the average daily truck traffic to and from the location is approximately 2 large trucks (water haulers, cement trucks, etc.) and 6 personal pickup trucks per day. During the well completion process (a 3-4 week period) the average daily traffic increases to 4-6 large trucks and 6 personal pickup trucks per day. Finally, during the

Production phase the average daily traffic will decrease to 1-2 pickup trucks per day and 1 large truck daily or weekly depending on well production rates.

The reasonably foreseeable development within a 4 mile radius (an area of 32,170 acres) of the Iberlin 1-9H and Iberlin 1-9TH location is 402 CBNG wells on 80 acre spacing and 100 conventional oil wells on 320 acres spacing. To date, there are applications for 34 addition federal oil and gas wells (WOGCC July 22, 2013): 322 CBNG and 7 conventional wells.

2.3. Conformance with the Land Use Plan and Other Environmental Assessments

This proposal does not diverge from the goals and objectives in the Buffalo Resource Management Plan (RMP), 1985, 2001, 2003, 2011, and generally conforms to the terms and conditions of that land use plan, its amendments, and supporting FEISs, 1985, 2003.

3. AFFECTED ENVIRONMENT

This section briefly describes the physical and regulatory environment that may be significantly affected by the alternatives in Section 2, or where changes in circumstances or regulations occurred since adoption of analyses to which the EA tiers or incorporates by reference. The PRB FEIS considered a no action alternative (pp. 2-54 to 2-62) in evaluating a development of up to 54,200 fluid mineral wells. Nearly all of the PRB's CBNG wells and over 60% of the deep oil and gas wells are hydraulically fractured; BLM and Goolsby 2012. The BLM uses the aggregated effects analysis approach incorporating by reference the circumstances and developments approved via the subsequent NEPA analyses for adjacent and intermingled developments coincident to proposal area to retain currency in the no action alternative. 615 F. 3d 1122 (9th Cir. 2010); see Table 3.1, below. There are 328 wells in the cumulative effects analysis area, Wyoming Oil and Gas Conservation Commission (WOGCC) 2013. The total number of conventional wells in the Buffalo planning area is 1313, which includes 783 horizontal wells (federal, fee, and state) (as of April 2013). This represents 41% of the projected 3,200 in the 2003 PRB ROD. (The current surface disturbance in the analysis area is about 70 acres.) This agrees with the PRB FEIS which analyzed the reasonably foreseeable development rolling across the PRB of 51,000 CBNG and 3,200 natural gas and oil wells. The State of Wyoming and BLM also approved wells that operators may develop in the near future. In addition, and other operators are likely to continue seeking permits to develop unconnected leases in or in the affects analysis areas near the project area; decisions to approve or deny future proposals will occur following APD submittal. Development occurring on non-federal surface and non-federal mineral estate would continue. A summary of the proposed disturbance is in Section 2, above. BLM's position is there is a rare lack of surface disturbance impacts attributable to well type, subject to showing a distinction, not a mere difference. See, State Director Reviews WY-2010-023, Part 2, p. 3, and fn. 7, and 2013-005, pp. 2-3. This supports BLM and national policy in 43 CFR 3160 et seq, leasing, APD Form 3160-3, and 2005's Energy Policy Act (Kreckel 2007). The US Geological Survey noted there is only a remote chance of induced seismic activity from the nations hydraulic fracturing and water injection at volumes contemplated in the PRB.

BLM incorporates by reference the hydraulic fracturing analysis in Crazy Cat East EA, Devon's Barlow Ranch Federal 074974-3NH, and the raptor and migratory bird analysis in Lance's Sahara POD for these projects use similar operations and are in the PRB analysis area.

Project Area Description

The proposed well, access road and associated infrastructure would be developed within an area of approximately 180 acres. Elevations range from 5,323 to 5,275 feet above sea level.

Topography ranges from gentle to moderately rugged with steep slopes and deeply incised draws. Much of the project area consists of rolling hills and broad bottom drainages giving way to dissected uplands

with steep down-cut channel. This topography was created predominately by summer thunderstorms and spring runoff in ephemeral drainages with steep gradients and fine sediment substrate, which lead to the Powder River. The project area is drained south to north by South Prong of Belle Fourche River tributary of Belle Fourche River. Upper Belle Fourche River lies northeast of the project area. Stream banks are vegetated with tree and shrub species consisting of widely scattered cottonwood trees, patches of greasewood, and dense sagebrush. The overall project area is considered rangeland.

Table 3.1. Adjacent Project NEPA Analyses Incorporated Here by Reference by Decision Date

#	POD / Well Name	NEPA Document #	# / Type Wells	Decision Date
1	All Day POD	WY-070-EA08-026	35/CBNG	8/28/2009
2	Pine Tree Rainbow POD	WY-070-EA04-230	34/CBNG	9/30/2004
3	All Night Creek 4 Additions 2 POD	WY-070-EA07-29	4/CBNG	1/12/2007
4	All Night Creek 5 POD	WY-070-EA04-239	81/CBNG	9/24/2004
5	Barlow Ranch Federal 074974-3NH well	WY-070-EA12-173	1 Oil	8/10/2012
6	Hornbuckle well	WY-060-EA11-181	96 Oil	8/30/2011
7	Crazy Cat East EA	WY-070-EA13-028	36 Oil	3/5/2013
8	Mufasa Fed 11-31H well	WY-070-EA12-062	1 Oil	4/20/2012
9	Lance Sahara POD	WY-070-EA13-072	5 Oil	3/5/2013

South Prong of Belle Fourche River flows through the project area converging with Belle Fourche River approximately 0.8 miles to the northeast. It is an intermittent stream. Development potential exists for salable minerals, including sand and gravel deposits and clinker (USDI BLM 2009). Salable minerals are mined from surface deposits and outcrops. Alluvial and colluvial deposits consist of gradational and dissected alluvial fans (USDI BLM 2009). The underlying bedrock within the project area consists entirely of the Wasatch Formation. Within the vicinity of the project area, the Wasatch Formation is primarily variegated mudstone with sandstone and conglomeratic lenses (Love and Christiansen 1985). The Wasatch Formation is underlain by the Fort Union Formation, which is further subdivided into three different members. The upper member of the Fort Union Formation, the Tongue River Member, is known to contain thick, continuous coal beds, including the Anderson-Wyodak coal zone (Bartos and Ogle 2002). The Big George coal seam is considered a deeper equivalent to the Anderson-Wyodak coal zone within the Fort Union Formation (Bartos and Ogle 2002).

3.1. Air Quality

The Wyoming Department of Environmental Quality (WDEQ) regulates air quality with oversight provided by the Environmental Protection Agency (EPA). Refer to the PRB FEIS pp. 3-291 to 3-299, for a 2003-era description of the air quality conditions. BLM incorporates by reference, Update of Task 3A Report for the Powder River Basin Coal Review Cumulative Air Quality Effects for 2020, BLM (AECOM), 2009, (Cumulative Air Quality Effects, 2009) as it captures the cumulative air quality effects of present and projected PRB fluid and solid mineral development. The EPA established ozone standards in 2008, finalizing them in 2011. Existing air quality in the PRB is “unclassified/attainment” with all ambient air quality standards. It is also in an area that is in prevention of significant deterioration zone. PRB air quality is a rising concern due to ozone in the oil and gas producing Upper Green River Basin that became 1 of the nation’s 40 “nonattainment” zones for ozone in 2012; in addition to PRB-area air quality alerts issued in 2011and 2012 for particulate matter (PM), attributed to coal dust. Four sites monitor the air quality in the PRB: Cloud Peak in the Bighorn Mountains, Thunder Basin northeast of Gillette, Campbell County south of Gillette, and Gillette. In addition, the Wyoming Air Resource Monitoring System (WARMS) measures meteorological parameters from 6 sites, and particulate concentrations from 5 of those sites, monitors speciated aerosol (3 locations), and evapotranspiration rates (3 locations). These sites are at Sheridan, Taylor Reservoir, South Coal Reservoir, Buffalo, Juniper, and Newcastle. The northeast Wyoming visibility study is ongoing by the WDEQ. Sites adjacent to the

Wyoming PRB-area are at Birney on the Tongue River 24 miles north of the Wyoming-Montana border, Broadus on the Powder River in Montana, and Devils Tower.

Existing air pollutant emission sources in the region include:

- Exhaust emissions (primarily CO and nitrogen oxides (NOx)) from existing natural gas fired compressor engines used in production of natural gas and CBNG; and, gasoline and diesel vehicle tailpipe emissions of combustion pollutants;
- PM (dust) generated by vehicle travel on unpaved roads, windblown dust from neighboring areas, road sanding during the winter months, coal mines, and trains;
- Transport of air pollutants from emission sources located outside the region;
- NOx, PM, and other emissions from diesel trains; and
- SO2 and NOx from power plants.

3.2. Soils

Information on major land resource areas and soil types was obtained from Natural Resources Conservation Service (NRCS) information, including the Land Resource Regions and Major Land Resource Areas of the United States (U.S.), the Caribbean, and the Pacific Basin, U.S. Department of Agriculture (USDA) Handbook 296 (USDA 2006) and the Soil Survey Geographic Database (SSURGO). Soil baseline characterization for the project area is based on SSURGO database review and analyses. SSURGO is the most detailed level of soil mapping done by the USDA NRCS. Soils in the project area were identified from the South Campbell County Survey Area, Wyoming (WY605). The NRCS performed the survey using National Cooperative Soil Survey standards.

The BLM uses SSURGO soil survey information to predict soil behavior, limitations, and suitability for a given action. The BLM's long term goal for soil resource management is to maintain, improve, or restore soil health and productivity, and to prevent or minimize soil erosion and compaction. Soil management objectives are to ensure that adequate soil protection is consistent with the resource capabilities.

The project area is located within the Southern Part of the Northern Rolling High Plains Major Land Resource Area (MLRA). This area is in the Missouri Plateau, Unglaciated Section of the Great Plains Province of the Interior Plains. It is an area of old plateaus and terraces that are deeply eroded. Typically, local relief is about 150 to 250 feet. Slopes generally are gently rolling to steep, with wide belts of steeply sloping badlands bordering a few of the larger river valleys. Terraces are common along most of the major river systems in the area. In places, flat-topped, steep-sided buttes rise sharply above the plains.

The dominant soil orders in this MLRA are Aridisols and Entisols. Aridisols are well developed soils that have a very low concentration of organic matter and form in an arid or semi-arid climate. In contrast, Entisols are considered recent soils that lack soil development because erosion or deposition rates occur faster than the rate of soil development. Soils in the project area have developed in alluvium and residuum derived mainly from the Wasatch Formation. Lithology consists of light to dark yellow and tan siltstone and sandstones with minor coal seams.

Soils differ with topographic location, slope, and elevation. Soil depths vary from deep in the draw and creek bottoms to shallow in the uplands with very shallow soils on steeper slopes and ridge tops. Topsoil depths that can be salvaged for reclamation range from 0 inches on miscellaneous areas (such as badlands) to 2 inches on ridges and side slopes to in excess of 6 inches in bottomlands. Slopes vary with steep slopes occurring primarily along drainages. The primary soil limitations in the project area are depth to bedrock, low organic matter content, low water holding capacity, and high water erosion potential.

The project area contains a total of 2 soil map units affected by the proposed action. A map unit consists of the named soils or miscellaneous areas that are dominant or co-dominant in extent. Map units may also contain large areas of similar soils or miscellaneous areas not as extensive as the named components, and minor inclusions (dissimilar soils or miscellaneous areas that are minor in extent). The soil series is the most specific category of the national soil classification system, commonly used to designate soil map units. Soil series describe soils that have similar chemistry, physical properties, and perform similarly for land use purposes. Dominant soil map units found within the project area are listed in Table 3.2. Soil map units representing one percent or greater are identified. Additional soil information is included in the Ecological site descriptions. Ecological site descriptions are soil and vegetation community descriptions compiled by the NRCS for the purpose of resource identification providing management and reclamation recommendations (provided below).

Table 3.2. Dominant Soils Affected by the Proposed Action

Map Unit	Map Unit Name	Approximate Acres[1]	% Project Area
147	Forkwood-Cushman loams, 6 to 15% slopes	8.07	89
214	Theedle-Kishona loams, 0 to 6% slopes	0.74	9
216	Theedle-Kishona-Shingle loams, 3 to 30% slopes	0.23	2

1 The dominant soils are soil types that cover at least 1 percent or more of the project area. NRCS 2010.

Areas of soils of a single taxonomic class rarely, if ever, can be mapped without including areas of other taxonomic classes. Consequently, every map unit is made up of the soils or miscellaneous areas for which it is named and some minor components that belong to a taxonomic class other than those of the major soils. Minor components may have properties and behavioral characteristics divergent enough to affect use or to require different management. Areas of minor components were identified during the onsite investigations especially where the soil pattern was so complex that it was impractical to identify all the soils and miscellaneous areas on the landscape.

The map unit that makes up the minority of the project area (2%) also holds the soil with most limiting chemical and physical soil properties, Theedle-Kishona-Shingle loams, 3 to 30% slopes. The dominant components of the Theedle-Kishona-Shingle loams, have a fair to poor rating as a source of topsoil or reclamation material. Map unit, has similar limiting soil properties and rating as a source of topsoil. The majority of the proposed access road lies over this map unit.

The map units that make up the majority of the project area (95%) also hold the soil with least limiting chemical and physical soil properties. The entire well pad and most of the access road falls over map unit Forkwood-Cushman loams, 6 to 15% slopes (89%) with Theedle-Kishona loams, 0 to 6% slopes having complimentary properties. The dominant components of the Forkwood-Cushman loams have a fair rating as a source of topsoil or reclamation material. Topsoil depth ranges from 0 to 23 inches with low organic content of 0 to 2%. The soil has a slightly sodic horizon within 30 inches of the surface. The subsoil below 30 inches in depth is the component is of greatest concern due to the lack of organic matter, high EC, high SAR with high erosion potential. Approximately 80% (up to 41,060 cubic yards) of the material excavated to construct the well pad will be material from the *Cr*[1] soil horizon. In its current undisturbed state, the sterile *Cr* material is isolated from the surface by 30 to 60 inches of overlying soil horizons.

1 - Soil horizons differ in a number of physical properties such as color, texture, structure, and thickness. Other properties such as chemical and mineral content, consistence, and reaction require special laboratory tests. All these properties are used to define types of soil horizons. Soil scientists use the capital letters A**,** B, C**,** Cr and R to identify the soil horizons. Most soils have three major horizons -- the surface horizon (A), the subsoil (B**),** and the substratum (C or Cr**).** Hard bedrock, which is not soil, uses the letter R (NRCS 2010).

These three map units are all poorly rated as construction material sources due to high clay content and low soil strength. See the NRCS Soil Survey WY605 – Campbell County (SSURGO) data for more detailed soil information. Ecological Site interpretations include additional site-specific soil information.

3.2.1. Soils Susceptible to Erosion

Productivity loss is likely to occur on most disturbed soils if erosion is not mitigated. The development of a favorable rooting zone by the weathering of parent rock is much slower than development of the surface horizon. One estimate of this renewal rate is 0.5 tons per acre per year for unconsolidated parent materials and much less for consolidated materials. Loss of organic matter, resulting from erosion and tillage, is one of the primary causes for reduction in production yields. As organic matter decreases, soil aggregate stability, soil moisture holding capacity, and cation exchange capacity decline (USDA 1998). The NRSC (2010) soil interpretations indicate that the soils in the project area are not highly susceptibility to water and wind erosion however the sub-soils that will be exposed from construction are. Drastically disturbed site such as well pads create an environment that is highly susceptibility to water and wind erosion

3.3. Vegetation and Ecological Sites

Ecological site descriptions provide site and vegetation information needed for resource identification, management, and reclamation recommendations. To determine the appropriate ecological sites for the area contained within this proposed project area, BLM specialists analyzed data from on-site field reconnaissance and from NRCS published soil survey information. A summary of the Ecological sites within the project area and their corresponding map units, approximate acreage, and percentage of the total area identified within the POD boundary are listed in Table 3.3.

Table 3.3. Ecological Sites and Soils Map Units within the Project Area

Map Unit	Ecological Site	Approximate Acres	% of Project Area
147	Loamy (10-14NP)	1,131.2	100
214			
216			

3.4. Water Resources

Peak will truck water to the location for drilling and hydraulic fracturing operations. The source of water will be from either a CBNG well located NESE Section 18, T43N/R74W producing water from the Big George coal seams or a stock water reservoir located NWNW Section 17, T43N/R74W which is most likely receiving discharge water from CBNG wells producing water from the Big George. The water will be loaded onto trucks transported roughly 7.6 miles to the Iberlin 1-9H and Iberlin 1-9TH site. The operator did not disclose the volume to of water needed for drilling and well completion but water will be stored on location in a 41,000 barrel temporary tank. During the initial phase of well production the produced oil and water will be stored in tanks and then periodically transported by truck off location. The operator did not disclose the disposal methods but it is assumed that produced water will be taken to either an approved Class II disposal wells or/and an evaporation facility listed below:

WDEQ regulates Wyoming's water quality with oversight provided by the US Environmental Protection Agency (EPA). The Wyoming State Engineer's Office (WSEO) has authority for regulating water rights issues and permitting impoundments for the containment of the State's surface waters. The Wyoming Oil and Gas Conservation Commission (WYOGCC) permits and approves bonding for off channel pits located over state and fee minerals.

3.4.1. Groundwater

The historical use for groundwater in this area has been for stock or domestic water. There are 324 CBNG and 4 producing oil wells within 4 miles of the project area. A search of the WSEO Ground Water Rights

Database showed 3 registered stock water wells within 1 mile of the proposed wells in the project area with depths from 275 to 300 feet. Refer to the PRB FEIS for additional information on groundwater, pp. 3-1 to 3-36. The 2004 EPA study found it unlikely that hydraulically fractured CBNG wells would contaminate ground water, p. 7-5. The EPA has an expansive, on-going study looking at more aspects of hydraulic fracturing and has yet to issue guidance resultant from the study. See Table 3.4 below. For additional information on groundwater, refer to the PRB FEIS, pp. 3-1 to 3-36.

Table 3.4. Permitted Water Wells within 1 Mile of the Iberlin 1-9H and 1-9TH

#	Well Name/ #	Permit #	Location	Total Depth	Static Water Level	Uses
1	Taylor #54-1	P14679.0P	NESW Sec 9, T42N/R74W	275 feet	100 feet	Stock
2	Taylor #58-3	P14685.0P	SWSE Sec 16, T42N/R74W	275 feet	150 feet	Stock
3	PT-WW#1	P85802.0W	SWSE Sec 4, 42N/R74W	300 feet	180 feet	Stock

The Operator Proposes to run surface casing to 2,500 feet, total vertical depth to protect shallow aquifers. The Fox Hills, the deepest known fresh water zone in the PRB lies well above the target Shannon formation. Table 3.5 shows the depths where the drill hole will have casing set and cemented in place 200 feet above the Fox Hills.

Table 3.5. Casing Set and Cementing Depths in relation to the Fox Hills

#	Well Name/ #	Depth of Surface Casing	Depth of Intermediate Casing	Depth to Fox Hills
1	Iberlin 1-9H	2,500 feet	9,385 feet	7,127 – 7,207 feet
2	Iberlin 1-9TH	2,500 feet	10,988 feet	7,125 – 7,205 feet

3.4.2. Surface Water

The project area is in the South Prong Belle Fourche River drainage which is tributary to the Belle Fourche River. South Prong Belle Fourche River is ephemeral (flowing only in response to a precipitation event or snow melt). The channels are primarily well vegetated grassy swales, without defined bed and bank. See generally the PRB FEIS for a surface water quality discussion, pp. 3-48 to 3-49. A search of WSEO Ground Water Rights Database did not identified any natural springs within a 1 mile radius of Iberlin 1-9H and Iberlin 1-9TH project. However, there are 5 permitted stock reservoirs within a mile of the project that may charge seeps and surface water downstream. For more information on surface water refer to the PRB FEIS, pp. 3-36 to 3-56.

3.5. Wetlands/Riparian

South Prong Belle Fourche River is included in the National Wetlands Index listed as a freshwater emergent wetland. The Iberlin 1-9H and Iberlin 1-9TH wellbores are sited in the drainage less than 2,000 feet from the stream channel. Other ephemeral drainages, which flow into intermittent South Prong Belle Fourche River, dissect the area. The ephemeral drainages have gentle slope with well vegetated bottoms with numerous small head-cut features.

3.6. Invasive Species

The BLM discovered Scotch thistle, a state-listed noxious weed, by a search of inventory maps and/or databases and were observed during subsequent field investigation. The Operator contacted the Campbell County weed and pest district who reports spotted knapweed Scotch thistle and buffalo bur being prevalent in the vicinity of the project area. During the onsite field investigation, cheatgrass or downy brome (*Bromus tectorum*) and to a lesser extent, Japanese brome (*B. japonicus*) were identified in the affected environment. These 2 species are found in high densities and numerous locations throughout NE Wyoming. Scientists attribute infestation of cheat grass in the semi-arid west with increasing the frequency and intensity of wildfire; Balch 2013.

3.7. Locatable Minerals

There are a total of 18 individual mining claims located in the same section as these 2 proposed oil wells. Although mining claimants are not required to list the mineral(s) they are locating their claim(s) for, given the number of uranium projects in this area, these mining claims were likely located for uranium.

3.8. Fish and Wildlife

The PRB FEIS identified wildlife species occurring in the PRB, pp. 3-113 to 3-206. The Operator employed Grouse Mountain Environmental Consultants (GMEC) to complete wildlife surveys and habitat assessment within 0.5 miles of the project area. Likewise, the BLM wildlife biologists performed a habitat assessment in the project area during the onsite field visits. The biologist evaluated impacts to wildlife resources and recommended project modifications where wildlife issues arose. BLM wildlife biologists also consulted databases compiled and managed by BLM BFO wildlife staff, the PRB FEIS, Wyoming Game and Fish Department (WGFD) datasets, and the Wyoming Natural Diversity Database (WYNDD) to evaluate the affected environment for wildlife species that may occur in the project area. This section describes the affected environment and impacts to wildlife known or likely to occur in the area of the proposal. The majority of the total acreage surveyed is comprised of rolling hills with an understory dominated by go-back land consisting of crested wheatgrass (*Agropyron cristatum*), cheatgrass (*Bromus tectorum*), western wheatgrass (Pascopyrum smithii), intermediate wheatgrass, and blue gramma (*Bouteloua gracilis*). Vegetation in the northern portion of the surveyed area consists of sagebrush (*Artemesia tridentate* ssp.) Several rock outcroppings and cliff banks were also surveyed during the habitat assessment. Livestock grazing (sheep and cattle) and mineral development are the predominant land uses in the area. (GMEC 2013) Wyoming State Highway 387 lies 760 feet north of the edge of the proposed well pad and in clear line of sight. The rangeland at the well location and the immediate area has been intensively grazed leaving the area with sparse standing vegetation.

3.8.1. Big Game

The big game species occurring in the project area are mule deer, pronghorn and white-tailed deer. Yearlong use is when a population of animals makes general use of suitable documented habitat sites within the range on a year-round basis. Animals may leave the area under severe conditions. Winter-yearlong use is when a population or a portion of a population of animals makes general use of the documented suitable habitat sites within this range on a year-round basis, but during the winter months there is a significant influx of additional animals into the area from other seasonal ranges. The project is in the range of the Pumpkin Buttes mule deer pronghorn herds. The mule deer herd was 13% below the population objective in 2010 (WGFD 2011a). The herd declined 21.6% since 2006 falling below population objectives for the past 2 years. The white-tailed deer herd on the other hand was 100% above objective and has been above objectives for the past 10 years. The pronghorn herd was 46% above population objectives and has been for the past 12 years. The PRB FEIS discussed the affected environment for pronghorn, mule deer, and white-tailed deer on pp. 3-117 to 3-122, pp. 3-127 to 3-132, and 3-122 to 3-127 respectively.

3.8.2. Raptors

The PRB FEIS discussed the affected environment for raptors, pp. 3-141 to 3-148. There are no known raptor nests are within 0.5 miles of the proposed well site. GMEC completed 3 surveys between April 15 and June 15, 2013 to search for undocumented raptor nests with special attention given to rock outcrops, cliffs, ridges knolls and other likely areas. No new nests were located and known nest locations within 1 mile of the well location were noted to be gone. Raptor nesting habitat is present thought out the area an unidentified raptors in flight were noted by the BLM biologist during the onsite inspection.

3.8.3. Migratory Birds

The PRB FEIS discussed the affected environment for migratory birds, pp. 3-150 to 3-153. Migratory birds migrate for breeding and foraging at some point in the year. The BLM-Fish and Wildlife Service

(FWS) Memorandum of Understanding (MOU) (2010) promotes migratory birds' conservation, per Executive Order 13186 (Federal Register V. 66, No. 11). BLM includes migratory birds in every NEPA analysis of actions having potential to affect migratory bird species of concern to fulfill obligations under the Migratory Bird Treaty Act (MBTA). BLM encourages voluntary design features and conservation measures agreeing with those in the programmatic mitigation in Appendix A of the PRB ROD.

Habitats occurring near the proposed well location include sage-brush steppe grasslands, mixed grass prairie, and mature deciduous trees. Many species that are of high management concern use these areas for their primary breeding habitats (Saab and Rich 1997). Nationally, grassland and shrubland birds declined more consistently than any other ecological association of birds over the last 30 years (WGFD 2009). The FWS's Birds of Conservation Concern (BCC 2008) report identifies species of all migratory nongame birds that, without additional conservation actions, are likely to become candidates for listing under the Endangered Species Act. Species in this list that have the potential to occur in the project area are: Brewer's sparrow, sage thrasher, loggerhead shrike, short-eared owl, and grasshopper sparrow. Of these, 3 species are identified on the BLM Wyoming Sensitive Species list.

The WGFD Wyoming Bird Conservation Plan (Nicholoff 2003) identified 3 groups of Wyoming's high-priority bird species: Level I – those that clearly need conservation action, Level II – species where the focus should be on monitoring, rather than active conservation, and Level III – species that are not of high priority but are of local interest. Species likely occurring in the project area are in Table 3.5.

Table 3.5. Migratory Birds Occurring in Shrub-Steppe Habitat in NE Wyoming (Nicholoff 2003)

Level	Species	Wyoming BLM Sensitive
Level I	Brewer's sparrow	Yes
Level II	Lark bunting	No
	Lark sparrow	No
	Loggerhead shrike	Yes
	Sage thrasher	Yes
	Vesper sparrow	No

3.8.4. Threatened, Endangered, Candidate, Special Status (Sensitive) Species

Project effects will not impact threatened, endangered, candidate, and proposed species occurring in the area beyond the level analyzed in the PRB FEIS. A discussion of the affected environment is in the PRB FEIS, pp. 3-174 to 3-179. A description of habitat and presence for threatened and endangered species is in Table 4.3, in Section 4.9.5 below. Ute ladies'-tresses (ULT) habitat is not present in the project area and the species is not expected to occur.

3.8.4.1. Ute Ladies'-Tresses Orchid (ULT)

Within the project area, South Prong Belle Fourche River, was surveyed in 2013 for ULT as a listed species under the Endangered Species Act (ESA). Suitable habitat or individuals was not found to be present (GMEC 2013). The area has been intensely grazed by sheep including the drainage bottoms. Soil types were primarily loamy with moderately high clay content. No known populations of the ULT are present in Campbell County. The closest known population is near Wind Creek in Converse County, 12.3 miles southwest. The nearest known suitable habitat for ULT is 4 miles to the southeast.

3.8.5. Candidate Species - Greater Sage-Grouse (GSG)

The PRB FEIS has a detailed discussion on GSG ecology and habitat, pp. 3-194 to 3-199. Subsequently the FWS determined the (GSG warrants federal listing as threatened across its range, but precluded listing due to other higher priority listing actions, 75 Fed. Reg. 13910 to 14014, Mar. 23, 2010; 75 Fed. Reg. 69222 to 69294, Nov. 10, 2010. GSG are a WY BLM special status (sensitive) species (SSS) and a

WGFD species of greatest conservation need because of population decline and ongoing habitat loss. The 2012 population viability analysis for the Northeast Wyoming GSG found there remains a viable population of GSG in the PRB (Taylor et al. 2012). However, threats from energy development and West Nile virus (WNv) are impacting future viability (Taylor et al. 2012). The BLM IM WY-2012-019 establishes interim management policies for proposed activities on BLM-administered lands, including federal mineral estate, until RMP updates are complete.

The State Wildlife Agencies' Ad Hoc Committee for Consideration of Oil and Gas Development Effects to Nesting Habitat (2008) recommends that impacts to leks occur within 4 miles of oil and gas developments. WGFD records show there are no GSG leks within 4 miles of the project area. In its Recommendations for Development of Oil and Gas Resources within Important Wildlife Habitats (2009), WGFD categorized impacts to GSG by number of well pad locations per square mile within 2 miles of a lek and within identified nesting/brood-rearing habitats greater than 2 miles from a lek. Moderate impacts occur when well density is between 1 and 2 well pad locations per square mile or where there is less than 20 acres of disturbance per square mile. High impacts occur when well density is between 2 and 3 well pad locations per square mile or when there are between 20 and 60 acres of disturbance per square mile. Extreme impacts occur when well density exceeds 3 well pad locations per square mile or when there are greater than 60 acres of disturbance per square mile.

The GSG population in northeast Wyoming is exhibiting a steady long term downward trend, as measured by lek attendance (WGFD 2011b). Figure 3.1 illustrates a 10-year cycle of periodic highs and lows. Each subsequent population peak is lower than the previous peak. Research suggests that the declines since 2001 are a result, in part, of energy development (FWS 2010, Taylor et. al. 2012). Impacts from oil and gas development are most discernible at the spatial scale of 20 km (12.4 mi) (Taylor et al. 2012). These findings echo results from previous studies conducted in the basin, wherein biologists observed basin-wide population declines (Walker et al. 2007). There are 24 documented leks within 12.4 miles of the Iberlin 1-9H and Iberlin 1-9TH well site, none of which are in GSG priority habitat. Currently there are 9,114 existing wells (2,634 are abandoned) within 12.4 miles of the 24 leks, an area of 1,242 square miles.

Figure 3.1. Average Peak Number of Sage-Grouse Males at WGFD Count Leks by Year in the PRB

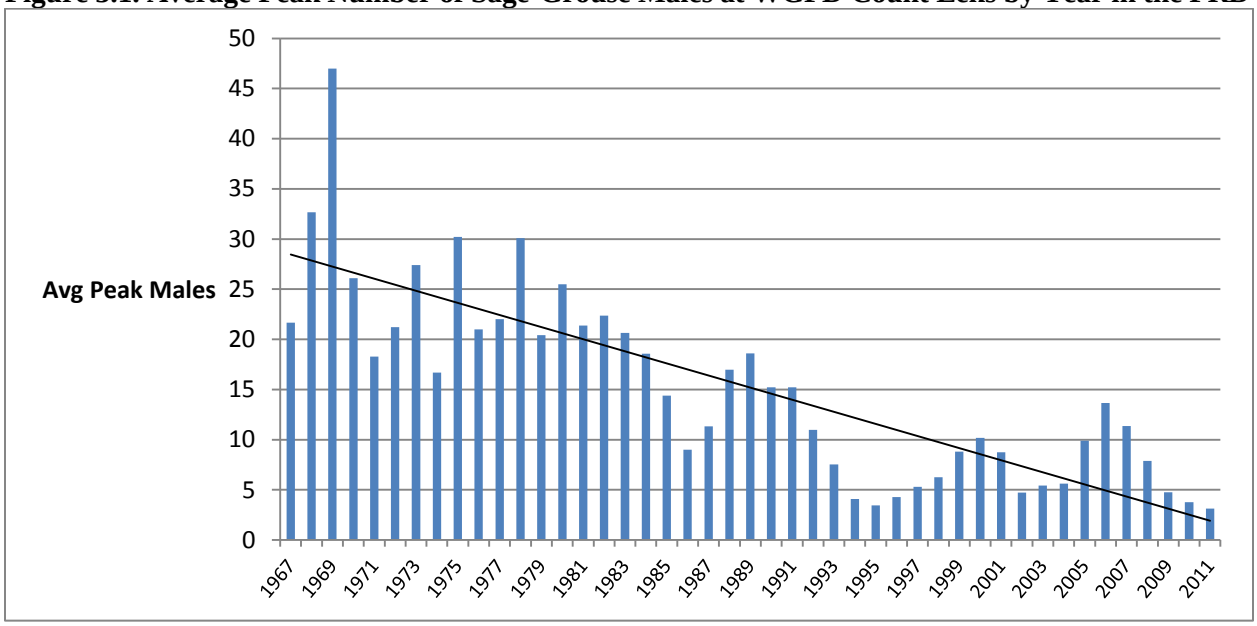

Site Specific Habitat

The project area is approximately 5.3 miles from the nearest GSG lek, Little Black Butte, and 23.6 miles from GSG priority habitat, as identified in EO 2011-5, Greater Sage-grouse Core Area Protection. GSG habitat models indicate that the project area may contain high quality GSG nesting habitat (Walker et al. 2007). The BLM biologist confirmed no suitable nesting and brood rearing habitat exists within 0.5 mile survey area surrounding the Iberlin 1-9H and Iberlin 1-9TH well site and access road. Suitable habitat does exist within 2 miles of the proposed action. Sagebrush stands located north of the project area and north of Wyoming Highway 387 consist of 5-8% canopy cover with an average height of 12-14 inches. However the majority of the sagebrush stands have been fragmented by CBN and oil field development reducing the likelihood that GSG would select the area(GMEC 2013).

3.8.6. Special Status (Sensitive) Species (SSS)

Sensitive species are discussed in the PRB FEIS pp. 3-189 to 3-201. Wyoming BLM manages habitats for Sensitive Species and Species of Concern to preclude listings as threatened or endangered species. The authority for the sensitive species policy and guidance comes from the Endangered Species Act (ESA) of 1973, as amended; the FLPMA of 1976; the U.S. Department of the Interior (USDI) Manual 235.1.1A, and BLM Manual 6840. The policy goals are to:

- Maintain vulnerable species and habitat components in functional BLM ecosystems
- Ensure sensitive species are considered in land management decisions
- Prevent a need for species listing under the ESA
- Prioritize needed conservation work with an emphasis on habitat

Only potentially affected species are discussed below. Evaluations of all Wyoming BLM-Sensitive Species are in Appendix B of this EA, Table B.1. For the species listed below, where habitat is present but there were no recorded observations, surveys specifically targeting these species were not conducted unless otherwise stated. Some may be present, but are unrecorded, and others likely are not present.

3.8.6.1. Black-tailed Prairie Dog

The PRB FEIS discussed the affected environment for black-tailed prairie dogs, p. 3-179. The black-tailed prairie dog was on the list of candidate species for federal listing in 2000 (USFWS 2000). It was removed from the list in 2004. Comparisons with 1994 aerial imagery indicated that black-tailed prairie dog acreage remained stable from 1994 to 2001, but aerial surveys in 2003 indicated that approximately 47% of the prairie dog acreage was impacted by Sylvatic plague and/or control efforts (Grenier et al. 2004). Due to human-caused factors, black-tailed prairie dog populations are now highly fragmented and isolated (Miller et al. 1994). Most colonies are small and subject to potential extirpation due to inbreeding, population fluctuations, and other problems that affect long term population viability, such as landowner poisoning and disease (Primack 1993, Meffe and Carroll 1994, Noss and Cooperrider 1994). Records show the nearest known black-tailed prairie dog colony lies approximately 5 miles northwest of the project area. GMEC did observe a small abandoned prairie dog colony southeast of the well location.

3.8.6.2. Bald Eagle

The PRB FEIS discussed the affected environment for bald eagles, p. 3-175. The FWS listed the bald eagle as a threatened species when BLM approved the PRB FEIS. FWS removed the bald eagle from the ESA on August 8, 2007 due to its successful recovery. The bald eagle has protection under the Bald and Golden Eagle Protection and the Migratory Bird Treaty Acts. Mature cottonwoods along are sparse and none sufficient to support the construction of a large balk eagle nest or substrate that could support roosting eagles within 1 mile of the project area. GMEC did not did not survey for roosting bald eagles within 1 mile of the project area during winter roost surveys (GMEC 2013). Historic surveys dating back to 2005 did report roosting bald eagle in the vicinity of the project area the nearest being over a mile away back in January 2008.

3.8.6.3. Ferruginous Hawk

The PRB FEIS discussed the affected environment for ferruginous hawk, p. 3-183. The species is widely distributed; its population status and trends are unknown but are suspected as stable. Populations are experiencing habitat loss, and they are sensitive to human disturbance. In the Powder River Basin, this hawk inhabits grasslands and sage shrublands in the PRB. They typically nest on the ground, increasing its exposure to ground predators. Suitable foraging habitat for the ferruginous hawk is present throughout the project area as well as suitable nesting sites.

3.8.6.4. Western Burrowing Owl

The affected environment for the Western burrowing owl (burrowing owl) is discussed in the PRB FEIS on p. 3-186. Current population estimates for the U.S. are not well known but trend data suggest declines throughout the burrowing owls' North American range (McDonald et al. 2004). Primary threats are habitat loss and fragmentation, mostly due to intensive agricultural and urban development and habitat degradation, due to declines in populations of colonial burrowing mammals (Klute et al. 2003).Historic survey information at the BFO indicates there are no burrowing owl nests within 0.25 mile of the project area. The lack of an active prairie dog colony within the vicinity of the project area negates the presence suitable western burrowing owl habitat in the project area as documented; see Appendix B, Table B.1.

3.8.6.5. Mountain Plover

The PRB FEIS discussed the affected environment for mountain plover on pp. 3-177 to 3-178. FWS proposed the mountain plover as a threatened species under the ESA when the PRB EIS was written. In 2003, FWS withdrew the proposal, finding that the population was larger than thought and was no longer declining. On May 12, 2011, after a review of the current scientific and commercial information, the FWS, found mountain plover not warranted for listing, citing threats to its habitat as less significant than previously thought. Suitable habitat for mountain plover within the project area is limited and they typically seek out large prairie dog colonies (10 or more acres). Surveys for nesting mountain plovers were conducted by GMEC in 2013 following the USFWS guidelines for mountain plover surveys (USFWS 2002a). Surveys were conducted and extended buffer of 0.25 mile from proposed construction areas, paying particular attention to black-tailed prairie dog colonies and other positive habitat images. No mountain plover individuals or nests were observed during the 2013 surveys. However, the abandoned prairie dog colony including relatively flat terrain and the heavy livestock grazing all constitute suitable breeding and nesting habitat for mountain plover.

3.8.6.6. Brewer's Sparrow

The PRB FEIS discussed the affected environment for Brewer's sparrow, p. 3-200. Sagebrush grassland areas in the project area provide suitable nesting habitat for Brewer's sparrows, and the species is suspected to occur.

3.8.6.7. Northern Leopard Frog

The affected environment for northern leopard frog is discussed in the PRB FEIS on p. 3-181. Suitable habitat is present along South Prong Belle Fourche River, the 4 stock reservoirs and within the wetland and riparian areas of the project area. There are no recorded observations of northern leopard frogs within the project area, but it is suspected to be present.

3.8.6.8. Columbia Spotted Frog

The PRB FEIS discussed the affected environment for the Columbia spotted frog, p. 3-193. The species is relatively common range-wide but uncommon in the project area due to the lack of existing habitat (perennial waters).

3.9. Cultural Resources

A class III cultural resource inventory was performed for the Iberlin 1-9H and Iberlin 1-9TH prior to on-the-ground project work (BFO project no. 70130050). A class III cultural resource inventory following the Archeology and Historic Preservation, Secretary of the Interior's Standards and Guidelines (48CFR190) and the *Wyoming State Historic Preservation Office Format, Guidelines, and Standards for Class II and III Reports* was provided by Peak Powder River Resources. Seth Lambert, BLM Archaeologist, reviewed the report for technical adequacy and compliance with BLM standards, and determined it to be adequate. No Cultural resources are in the project area.

3.10. Transportation

The Iberlin 1-9H and Iberlin 1-9TH well location is located only 950 feet off Wyoming State Highway 387. There is an existing easement with a metal gate off the highway to the well location but there is no road. The terrain from the Highway 387 and the well location is relatively flat across loamy soils that are prone to wheel rutting when exposed to heavy vehicle loads especially when the soil is wet.

4. ENVIRONMENTAL EFFECTS

This section describes the environmental effects of Alternatives A and B. This analysis addresses the direct and indirect effects of implementing the proposed wells, the cumulative effects of the proposed well, combined with reasonably foreseeable federal and non-federal actions, identifies and analyzes mitigation measures (COAs), and discloses any residual effects remaining, following mitigation.

4.1. Alternative A: No Action Alternative

BLM analyzed the no action alternative as Alternative 3 in the PRB FEIS, see Table 4.1, below, and it subsequently received augmentation of the effects analysis in this EA through the analysis of mineral projects, their approval, and construction; and through the analysis and approval of other projects. BLM incorporates by reference these analyses in this EA; see Table 3-1, above. This updated the no action alternative and cumulative effects. The project area has about 70 acres of surface disturbance from existing roads, well pads, and oil and gas facilities. Under the no action alternative, on-going well field operations would continue as would the development of approved single and multi-well pads (approximately 10 acres of new disturbance). The drilling, completion and production of these new wells would result in noise and human presence that could affect resources in the project area; these effects could include the disruption of wildlife, the dispersal of noxious and invasive weed species, and dust effects from traffic on unpaved roads. Present fluid mineral development in the PRB is under half of that envisioned and analyzed in the PRB FEIS. There is only a remote potential for significant effects above those identified in the PRB FEIS to resource issues as a result of implementing the no action alternative.

Table 4.1. Location of Discussion of the No Action Alternative in the PRB FEIS

Resource		Type of Effect	Page(s) of PRB FEIS
Project Area Description	Geologic Features and Mineral Resources	Direct and Indirect Effects	4-164 and 4-134
		Cumulative Effects	4-164 and 4-134
Soils, Vegetation, and Ecological Sites	Soils	Direct and Indirect Effects	4-150
		Cumulative Effects	4-152
	Vegetation	Direct and Indirect Effects	4-163
		Cumulative Effects	4-164
	Wetlands/Riparian	Direct and Indirect Effects	4-178
		Cumulative Effects	4-178

Resource		Type of Effect	Page(s) of PRB FEIS
Wildlife	Sensitive Species - Greater Sage-Grouse	Direct and Indirect Effects	4-271
		Cumulative Effects	4-271
	Aquatic Species	Direct and Indirect Effects	4-246
		Cumulative Effects	4-249
	Migratory Birds	Direct and Indirect Effects	4-234
		Cumulative Effects	4-235
	Waterfowl	Direct and Indirect Effects	4-230
		Cumulative Effects	4-230
	Big Game	Direct and Indirect Effects	4-186
		Cumulative Effects	4-211
	Raptors	Direct and Indirect Effects	4-224
		Cumulative Effects	4-225
Water	Ground Water	Direct and Indirect Effects	4-63
		Cumulative Effects	4-69
	Surface Water	Direct and Indirect Effects	4-77
		Cumulative Effects	4-69
Economics and Fluid Mineral Recovery		Direct and Indirect Effects	4-362
		Cumulative Effects	4-370
Cultural Resources		Direct and Indirect Effects	4-286
Air Quality		Direct and Indirect Effects	4-386
		Cumulative Effects	4-386
Visual Resources		Direct and Indirect Effects	4-313
		Cumulative Effects	4-314

4.2. Alternative B

Considering the precautions described in Section 2, the drilling plan, the plan of development (see the administrative record), best management practices, and the drilling history in the area (over 305 wells), the potential for hydrocarbon communication with fresh water aquifers (surface to 1,000 feet) is remote. This analysis presumes Peak and BLM enforce the APDs' drilling plan, plan of development, and Onshore Oil and Gas Order No.'s 2 and 7.

Project Area Description

Short-term direct effects (2 years or less) will exist for land uses within or adjacent to the project area due to construction activities, including surface disturbance, dust generation, and noise associated with heavy equipment operation. Construction, initial operation, and well servicing and maintenance would likely displace wildlife. Consequently, this would reduce the success of big game hunting in the area. Likewise, livestock grazing would be reduced impacting the success of stock growers' operations. These effects would continue until drilling and construction activities are complete, interim reclamation and stabilization measures achieve a steady state, and well visitation and generator refueling is minimized.

Interim reclamation is proposed to revegetate portions of the well pads, and access roads no longer needed after construction. Project impacts that will be long term (greater than 2 years) result from the use of pad and road needed for operations and maintenance for the life of the project (approximately 30-50 years). It is anticipated that these lands would not be available for wildlife or livestock grazing or other land uses during that time. Land use at the well site and along the access road and utility corridors would be converted for the duration of the well operation (and until final reclamation is achieved) to a mineral development. During this timeframe, the proposed lands would offer marginal if any grazing potential.

Cumulative effects to land uses from oil and gas development are discussed in the PRB FEIS, pp. 4-298 and 4-107 to 4-129.

4.3. Air Quality

In the project area, air quality impacts would occur during construction (due to surface disturbance by earth-moving equipment, vehicle traffic fugitive dust, well testing, as well as drilling rig and vehicle engine exhaust) and production (including well production equipment, booster and pipeline compression engine exhaust). The operator will control the amount of air pollutant emissions during construction by watering disturbed soils, and by air pollutant emission limitations imposed by applicable air quality regulatory agencies. Air quality impacts modeled in the PRB FEIS and Cumulative Air Quality Effects, 2009 concluded that PRB projected fluid and solid development would not violate state, tribal, or federal air quality standards and this project is well within the projected development parameters.

4.4. Soils and Vegetation

4.4.1. Direct and Indirect Effects

The PRB FEIS analyzed direct and indirect impacts to soils associated with fluid mineral development. For these affects refer to p. 4-134 of the PRB EIS.

4.4.2. Constructed Well Pad

The greatest impacts to the soil resources associated with this project include the construction of pads larger than the typical size considered by the PRB FEIS. The well pads to facilitate horizontal well drilling and hydraulic fracturing operations may exceed 5.5 acres including cut and fill slopes depending on site topography. Initial pad size is reduced per APD through interim reclamation and, if the well produces, the industry practice is drilling multiple wells from 1 pad. It can cost $7-10 million per well so prudent economics require a company to find a proven producer prior to designing and drilling new wells from the pad. Of course the drilling of additional wells from the pad drives down the average well surface disturbance; and if the first well is unsuccessful then reclamation accounts for the entire surface disturbance. The other unanticipated impact associated with hydraulic fracturing involves the amount of large truck traffic (between 200 and 700 trucks/well) to transport water storage containers, water and other hydraulic fracturing materials to the location as well as truck traffic anticipated for removing the storage tanks and flow-back fluid from the hydraulic fracturing.

Anticipated impacts occurring include soil rutting and mixing, compaction, increased erosion potential, and loss of soil productivity. The most notable impacts would occur in association with the construction of well pads, staging areas, and roads. Construction of these facilities requires grading and leveling, with the greatest level of effort required on more steeply sloping areas. Construction activities mix the soil profiles with a corresponding loss of soil structure. Mixing may result in removal, dilution, or relocation of organic matter and nutrients to depths where it would be unavailable for vegetative use. Less desirable inorganic compounds such as carbonates, salts, or weathered materials could be relocated and have a negative impact on revegetation.

Rutting affects the surface hydrology of a site as well as the rooting environment. The process of rutting physically severs roots, thus reducing soil aeration and infiltration thereby degrading the rooting environment. Rutting may result in topsoil and subsoil mixing, thereby reducing soil productivity. Rutting also disrupts natural surface water hydrology by diverting and concentrating water flow thus accelerating erosion. Soil mixing typically results in a decrease in soil fertility and a disruption of soil structure.

Soils compaction results from the construction of wells and associated facilities, continued vehicle and foot traffic as well as operational activities. Factors affecting compaction include soil texture, moisture, organic matter, clay content and type, pressure exerted, and the number of passes by vehicle traffic or machinery. Compaction leads to a loss of soil structure; decreased infiltration, permeability, and soil

aeration; as well as increased runoff and erosion.
Increased erosion can lead to a decrease in soil fertility and an increase in sedimentation. The duration and intensity of these impacts would vary according to the type of construction activity to be completed and the inherent characteristics of the soils to be impacted.

The potential for erosion would increase through the loss of vegetation cover and soil structure as compared to an undisturbed state. Soil productivity would decrease, primarily as a result of profile mixing and compaction along with the loss in vegetative cover. These impacts would begin immediately as the soils would be subjected to grading and construction activities and impacts would continue for the term of operations. The impacts on soils would move to a steady state as construction activities were completed and well production/maintenance operations begin.

An important component of soils in Wyoming's semiarid rangelands, especially in the Wyoming big sagebrush cover type, are biological soil crusts, or cryptogamic soils that occupy ground area not covered with vascular plants. Biological soil crusts are important in maintaining soil stability, controlling erosion, fixing nitrogen, providing nutrients to vascular plants, increasing precipitation infiltration rates, and providing suitable seed beds (Belnap et al. 2001). They are adapted to growing in severe climates; however, they take many years to develop (20 to 100) and can be easily damaged or destroyed by surface disturbances associated with construction activities. These impacts, singly or in combination, could increase the potential for valuable soil loss, reduction in soil quality, invasive/noxious/poisonous plant spread, invasion and establishment, and increased sedimentation and salt loads to the watershed system, if applicable mitigation measures are not used.

4.4.3. Pad Construction with a Closed Loop System

Peak proposes a pad design for the Iberlin 1-9H and Iberlin 1-9TH wells that would be using a closed loop system. Drilling water would be stored on location in three, 500 bbl HF tanks and drilling fluids would be stored in two, 500bbl HF tanks. A "shaker" separates the cutting from the fluids which are removed to two, 60 by 150 foot, lined bermed containment areas on location. Minimal additional excavation is required to construct the containment areas. After the well is drilled and completed, the dried cuttings would be either be buried on location or disposed of at an authorized facility. Drilling fluids would be disposed of at an authorized facility or location. The total working pad is approximately 4.2 acres with additional space needed to store 3,760 cubic yards of excess spoil and 4,570 cubic yards of topsoil which if stock piled 10 feet high will require 1.23 acres. The entire disturbance area will be enclosed within a 6.01 acre fenced area to exclude livestock and wildlife. This closed loop alternative is consistent with Wyoming BLM's Instruction Memorandum (IM)-WY-2012-007.

4.4.4. Access Road

There is increased soil disturbance associated with construction and/or upgrade of roads with running surface often 18 feet or more, with sub grade ranging from 20 to 28 feet, greatly increasing the soil disturbance depending on site topography. Geomorphic effects of roads and other surface disturbance range from chronic and long-term contributions of sediment into waters of the state to catastrophic effects associated with mass failures of road fill material during large storms. Roads can affect geomorphic processes primarily by: accelerating erosion from the road surface and prism itself through mass failures and surface erosion processes; directly affecting stream channel structure and geometry; altering surface flow paths, leading to diversion or extension of channels onto previously unchannelized portions of the landscape; and causing interactions among water, sediment, and debris at road-stream crossings.

The operator's proposed crown and ditched access road has minimal cuts/fills across relatively flat terrain. The operator is responsible for having the construction of the road meet Bureau standards. The road should be completed, including any culverts, cattleguards and required surfacing, before the drilling rig or other drilling equipment moves onto the pad in order to protect erodible soils.

Operator propose to utilize a seed mixes for the Iberlin 1-9H and Iberlin 1-9TH project area developed by the surface owner that is comprised of 5 grass species with the goals being to revegetate the area and provide forage opportunity for livestock. The seed mix does compliment the loamy soils and ecological sites found in the project area, and the mixing of soil horizons in disturbed areas.

The BLM will evaluate reclamation success using the requirements in the BLM State Wide Reclamation Policy found at: http://www.blm.gov/wy/st/en/programs/reclamation.

4.4.5. Soils Susceptible to Erosion

Areas that are difficult to reclaim include drastically disturbed sites, steep slopes, sandy sites and areas where the parent material is very shallow (typically less than 10 inches deep). Sandy sites and areas where the parent material is very shallow were identified during initial site visits to the well sites. The preferred access road was aligned to avoid these areas as described in previously in this document. The access route is to be improved road including an engineered section to accommodate runoff and minimize soil erosion. Other important though less visible soil characteristics were identified in the project area using SSURGO Data, onsite investigation, and project design review, these are listed below.

- Predicted disturbance would impact soils by exposing material deep in the soil material, which may have chemical and physical properties contributing to limited reclamation potential (LRP) properties.
- Amount of bareground, physical and chemical properties, and site conditions create sites classified as highly erosive to wind and water erosion.
- The proposed cut and fill slopes 1½:1 (67%) will contribute to the erosion classification and exceed the 25% slope restriction.

During the construction and drilling phase of the project, the operator plans to maintain cut and fill slopes at 1.5H: 1V slopes. This slope is very steep equivalent to 67% slope and is very challenging if not impractical to stabilize, and revegetate to meet the requirements of the Wyoming Reclamation Policy. These constructed slopes will be bare ground void of vegetation with the fill slopes being less stable due to soil mixing. Sediment transport from the surface disturbance areas is likely to be extensive even with proposed mitigation measures implemented.

The proposed well pad needed requires a 5.43 acres area to safely drill the wells with minimal cuts and fills. The Operator has chosen a relatively flat location where the native slope is 2% within undulating topography where slope typically range from 6 to 30%.

The soil depth identified in the SSURGO data ranges from 23 to 60 inches deep (A and B Horizons); an adequate depth to isolated or buffer the rooting zone from the *C* and *Cr* soil horizons that inhibit plant growth. The predicted cut depth exceeds the identified soil depth, thus impacting *C* and *Cr* horizons which are described as “little affected by pedogenic processes”, or unaltered parent material. The physical and chemical properties of the material is variable and very limiting in its potential to support plant growth, variable in erosion potential and suitability for construction material. During the construction process, the topsoil A Horizon will be stripped and the underlying soil horizons will be inverted and mixed; thus the exposure and creation of material described as Limited Reclamation Potential areas. During the construction process, this material is mixed and exposed to the surface creating and opportunity to contaminate surface soil. Even after the well pad is reduced during the production phase of the project, topsoil depth distributed over this parent material will be 11 inches or less. Suitable topsoil and subsoil material to an adequate depth is required to support desired vegetation.

The MSUP states production facilities will have cut and fill slopes reduced to3V:1H (33% slope). These slopes exceed 25%. These slopes need to have mitigation applied to reduce the slope length to address erosion and stability issues. Highly erosive soils due to the loss of vegetation and the physical and

chemical properties encountered make the site susceptible to wind erosion. Slope length and steepness are components in defining water erosion potential thus creating a highly erosive site to wind and water erosion. Modeled erosion amounts far exceeded the soil loss tolerance factor of the soils in the area, therefore expedient stabilization is required.

The reclamation plans developed by Peak and BLM applied COAs that would be implemented to mitigate or reduce the impacts associated with construction and operation. Interim reclamation consists of minimizing the footprint of disturbance by reclaiming all portions of construction disturbance not needed during production operations. Final reclamation would meet the guidelines outlined in the statewide reclamation policy. These actions would notably reduce intensity of the impacts to soils as well as the estimated time it would take to return the disturbed soils to a stable and productive state.

4.4.6. Cumulative Effects

The PRB FEIS defined the duration of disturbance, pp. 4-1 and 4-15. The PRB FEIS's analysis estimated an average of 5.5 acres (p. 4-312) of short-tern surface disturbance, per typical conventional oil well pad with long-term disturbance to encompass only 82% of the original disturbance area. Peak's proposed 6.01 acre pad and supporting access creates a total surface disturbance of approximately 9.06 acres. Yet when Peak reduces the drilling pad by 3 acres and completes interim reclamation on the access road, Peak reduces the total surface disturbance by over 55% of that in the construction phase, or to 5.04 acres, Table 2.2. There is nothing pre-decisional in this analysis, yet it is a useful metric for BLM to measure whether, or how close it is to meeting PRB FEIS analysis. Tremendous economics of modern horizontal drilling ($7-10 million per well) drive prudent companies to confirm a producing well prior to undertaking investing and planning for others. Conversely if the well is not productive past practice shows reclamation is likely for the surface disturbance.

The total surface disturbance analyzed in the PRB FEIS for all conventional (non-CBNG) drilling was 8,800 acres. Combined BLM and WOGCC have approved 14% of the projected 3,200 conventional wells (PRB FEIS, pp. 2-40 to 2-42). It is important to note that if the average well pad disturbance for conventional oil wells consistently exceeds the 5.5 acres average analyzed in the PRB FEIS, the total surface disturbance allowed will be exceeded before the full complement of wells projected can be completed. However, potential oil reservoir drainage from a horizontal well bore such as the Iberlin 1-9H and Iberlin 1-9TH is likely to far exceed that of the vertical well bore into the same formation utilizing a smaller surface footprint. Most soil and vegetation disturbances would be short term impacts with expedient interim reclamation and site stabilization, as committed to by the operator in their POD Surface Use Plan and as required by the BLM in COAs.

Geomorphic effects of roads and other surface disturbance range from chronic and long-term contributions of sediment into waters of the state to catastrophic effects associated with mass failures of road fill material during large storms. Roads can affect geomorphic processes primarily by: accelerating erosion from the road surface and prism itself through mass failures and surface erosion processes; directly affecting stream channel structure and geometry; altering surface flow paths, leading to diversion or extension of channels onto previously unchannelized portions of the landscape; and causing interactions among water, sediment, and debris at road-stream crossings.

These impacts, singly or in combination, could increase the potential for valuable soil loss due to increased water and wind erosion, invasive/noxious/poisonous plant spread, invasion and establishment, and increased sedimentation and salt loads to the watershed system, if applicable mitigation measures are not used. The National Academy of Sciences found very little risk of induced seismic activity from hydraulic fracturing.

4.4.7. Mitigation Measures

Peak will reduce impacts to vegetation and soils from surface disturbance by following its plans, using BLM applied mitigation, and the BLM Wyoming Reclamation Policy. These practices, as well as other mitigation measures identified in the MSUP and COAs, will results in less surface disturbance and overall environmental impacts.

Use of a closed loop system will reduce surface disturbance minimize impacts to the soil resource.

The operator will stabilize areas not needed for production during and within 30 days after construction is initiated.

For safety of travel, to reduce rutting and increase traction, place a minimum average of 4 inches of aggregate across the roadway.

To protect erodible soils, all road construction should be completed, including any culvert(s), cattleguard(s) and required surfacing, before the drilling rig or other drilling equipment moves to the pad.

The Operator will ensure that the construction of the road meets the design criteria(s) and BLM standards.

Provide erosion control along all cut and fill slopes to achieve successful reclamation. Erosion control features include water bars, mulching, straw crimping, or erosion blankets, etc.

The BLM will evaluate reclamation success using the requirements set forth in the State Wide Reclamation Policy revised 2011.

Peak will provide for construction oversight of the well pad.

Straw/Excelsior wattles are most effective as erosion control if applied on slopes less than 3H:1V. In the absence of manufacture's specifications included in the operator's MSUP, the minimum spacing requirements will be as follows:

Slope	6-inch waddle	9-inch waddle	12-inch waddle
≤4H:1V	20 feet	40 feet	60 feet
3H:1V	15 feet	30 feet	45 feet
2H:1V	10 feet	20 feet	30 feet
1H:1V	5 feet	10 feet	15 feet

Topsoil stored for a period greater than 90 days will not exceed piles of 10 feet in depth and will be seeded with the BLM-approved seed mix to prevent wind and water erosion.

The well pad cut and fill slopes at the 1.5V:1H constructed slopes are features that exhibit severe erosion potential that will require disturbed areas to be stabilized (stabilization efforts may include mulching, matting, soil amendments, et. cetera) in a manner which eliminates accelerated erosion and stabilizes the site in accordance with the Wyoming Reclamation Policy. Stabilization efforts shall be finished within 30 days of the initiation of construction activities. This applies to all surface disturbances within the Iberlin 1-9H and Iberlin 1-9TH well pad area.

Production Pad

Erosion control fabric used for reclamation of steep slopes should be photodegradable or biodegradable. Non-photodegradable/biodegradable erosion control fabric will be removed from the federal leases following establishment of a self-perpetuating native plant community and sustained soil stability.

In the absence of manufacture's specifications included in the operator's MSUP, erosion control fabric will be installed as follows:

a. The fabric will be 'keyed' into the slope by digging a small trench at the top of the slope;
b. Lay the top end of the material into the trench to line it;
c. To line it the edge is folded underneath itself and then it is secured using staples;
d. The trench is then filled in to the previous soil level; and
e. Fabric should be overlapped no less than 1 foot on edges and stapled on 3 foot spacing and at every seam.

Stabilization of steep slopes greater than 4H:1V will include but is not limited to the following components to minimize soil erosion and loss of seed:

a. Surface roughening/pocking or scarification perpendicular to the slope;
b. Install slope breakers such as waddles and water bars at the appropriate spacing;
c. Seed with appropriate seed mix; and

4.4.8. Residual Effects

Residual effects across the project area would include a long-term loss of soil productivity associated with well pads and roads. The PRB FEIS identified residual effects (p. 4-408) such as the loss of vegetative cover, despite expedient reclamation, for several years until reclamation is successfully established. In spite of the above residual effects, the BLM considers that Alternative B is within the parameters for surface disturbance and surface disturbance reclamation in PRB FEIS ROD**.**

4.5. Vegetation and Ecological Sites

4.5.1. Direct and Indirect Effects

The PRB FEIS discusses most direct and indirect effects to ecological sites and vegetation (p. 4-153 to 4-164). The proposed action would impact the common plant communities that occur on the site and the transition between the communities. Other impacts anticipated to occur include those in the direct and indirect effects listed above under soils section. Direct effects to ecological sites would occur from ground disturbance caused by construction of well pads, ancillary facilities, associated pipelines, and roads. Short term effects would occur where vegetated areas are disturbed but later reclaimed within 1 to 3 years of the initial disturbance. Long-term effects would occur where well pads, compressor stations, roads, water-handling facilities or other semi-permanent facilities would result in loss of vegetation and prevent reclamation for the life of the project.

Sagebrush does not regenerate easily after human disturbance such as urban or agricultural development, or even after natural occurrences such as wildfire. It takes years, even generations, for sagebrush to fully grow back. Sagebrush still has not returned to some areas of the Columbia Basin burned by a large fire 40 years ago (Pacific Northwest National Laboratory Shrub Steppe Ecology Series May 2010).

Soil impacted by the road and well location in the project area is susceptible to wind and water erosion especially once stripped of vegetation. This is primarily due to the low annual precipitation, low organic matter content, physical and chemical properties of the soils in the area. Soils are either well drained or excessively drained which results in low water holding capacity, and low potential for restoration. These properties create unstable soils and physical and chemical properties that limit plant growth along the access routes. These locations have very thin fragile topsoil with fragile root systems used to stabilize the surface and allow plant growth. Authorizations for surface disturbing actions are based upon the assumptions that a disturbance can ultimately be successfully reclaimed.

4.5.2. Cumulative Effects

The PRB FEIS discusses the cumulative effects to ecological sites (pp. 4-153 to 4-172). Cumulative

effects to ecological sites include the further alteration of disturbance regimes from the increased disturbance, increase in noxious weeds, and alterations in vegetation community's diversity and cover.

4.5.3. Mitigation Measures

Implementation of the soils COAs and mitigation measures listed above the operator's Integrated Weed and Pest Management Plan and the BLM listed in the MSUP (specifically Plans for Reclamation of the Surface) will reduce surface disturbance impacts to ecological sites and vegetation. See the administrative record for some of these documents. BLM selected seed mixes which contain native grasses and forbs could restore disturbed areas to properly functioning vegetation communities with the exception of sage-brush since it's not in the current seed mixes. BLM offers the same protections to privately owned surfaces that are disturbed as a result of federal mineral development as those administered by the BLM and therefore BLM developed a site specific seed mix for the access/pipeline corridors for the proposed project. The company will apply these mitigation measures to the Iberlin 1-9H and Iberlin 1-9TH well pad which will require expedient reclamation. The surface owner may choose a seed mix that may be more beneficial for grazing. The operator will submit a site specific reclamation plan and adapted to the drastically altered conditions and utilizing modern technologies.

A 30 day stabilization requirement is applied to all cut and fill slopes of the well pad and access/pipelines which will have impacts to sensitive areas identified in the field. If applied correctly, the seed mix which contains native grasses, in addition to residual seed from forbs, and shrubs could restore disturbed areas to properly functioning vegetation communities. The private landowner has chosen a seed mix only grass species that is more beneficial to ranch operations. The Operator will follow the reclamation requirements in the BLM State Wide Reclamation Policy found at: http://www.blm.gov/wy/st/en/programs/reclamation. See mitigation section in the soils section above for a full description of the policy as it applies equally to ecological sites.

4.5.4. Residual Effects

Residual effects were also identified in the PRB FEIS, p. 4-408 such as the loss of vegetative cover, despite expedient reclamation, for several years until reclamation is successfully established. The alteration of biodiversity of ecological sites could result from disturbance, alterations in vegetation in reclaimed areas, and the spread and establishment of weed species. The production portion of the well pad and the access roads will present a long term challenge for BLM and the operator to stabilize; interim reclamation which should create a stable functioning ecosystem that prepares the site for eventual final reclamation according to guidance provided in the Wyoming Reclamation Policy.

4.6. Water Resources

Adherence to the drilling COAs, the setting of casing at appropriate depths, following safe remedial procedures in the event of casing failure, and using proper cementing procedures should protect fresh water aquifers above the drilling target zone. Compliance with the drilling and completion plans and Onshore Oil and Gas Orders Nos. 2 and 7 will ensure there is no adverse impact on ground water. The Operator will run surface casing to 2,500 feet, total vertical depth to protect shallow aquifers. The top of cement for the production string will be calculated to 200 feet above the Fox Hills formation.

4.6.1. Groundwater

4.6.1.1. Direct and Indirect Effects

With applied mitigation measures there are no reasonable/foreseeable direct/indirect/cumulative or residual effects with the drilling of the proposed wells. Additionally the cumulative industry and regulatory experience shows that thousands of wells pierce the nation's largest aquifer in western Texas, Oklahoma, and Kansas with essentially no direct or indirect impact to that groundwater, see generally,

http://www.spe.org/jpt/print/archives/2010/12/10Hydraulic.pdf. Lastly, the EPA 2004 study and its ongoing, detailed study of hydraulic fracturing yielded no immediate cautions, concerns, or warnings that present industry and regulatory practices endanger ground water or require immediate changes.

4.6.1.2. Cumulative Effects

The volume of water produced by this federal mineral development is unknowable at the time of permitting. Peak will have to produce the well(s) for a time to be able to estimate the volume and quantity of water production. To comply with Onshore Order Oil and Gas Order No. 7 Disposal of Produced Water, Peak will submit a Sundry to the BLM within 90 days of first production which includes a representative water analysis and the final proposal for water management. The quality of water produced in association with conventional oil and gas historically was such that surface discharge would not be possible without treatment. Initial water production is quite low in most cases. There are 2 alternatives for water management: deep disposal via re-injection or disposal into evaporation pits. Both alternatives are protective of groundwater resources when performed in compliance with state and federal regulations.

4.6.1.3. Mitigation Measures

Adherence to the drilling COAs, the setting of casing at appropriate depths, following safe remedial procedures in the event of casing failure, and utilizing proper cementing procedures should protect fresh water aquifers above the target coal zone. Adherence to WDEQ permits and regulations will also mitigate impacts from produced water. This will ensure that groundwater will not be adversely impacted by well drilling and completion operations.

4.6.1.4. Residual Effects

No residual effects are anticipated.

4.6.2. Surface Water

4.6.2.1. Direct and Indirect Effects

Peak's preference, as well as BLM's, is to utilize a closed loop drilling system which is consistent with Instruction Memorandum No. WY-2012-007. WSEO well log records of the 3 existing stock water wells within 1 mile of the proposed wells and the nearest CBNG well (1,068 feet to the SW) indicate that the top of the ground water table is at least 140 feet. A closed loop drilling system would avoid possible contamination from an open reserve pit/drilling mud system.

Springs

Iberlin 1-9H and Iberlin 1-9TH will have no effect on springs as none exist in the area; however the stock water reserviors likely charge through active seeps with surface flow downstream.

Storm Water Controls

A WYPDES non-point source permit for construction activities would address potential surface water impacts from storm water runoff. The Iberlin 1-9H and Iberlin 1-9TH wells will be incorporated into Peak's discharge stormwater associated with large construction activities as required by WYDEQ

4.6.2.2. Cumulative Effects

Refer to the PRB FEIS, p. 4-115 to 4-117 and Table 4-13 for cumulative effects relative to the watershed and p. 117 for cumulative effects common to all sub-watersheds. The designation of the duration of disturbance is defined in the PRB FEIS (pp. 4-1 and 4-151). Most soil disturbances would be short term impacts with expedient interim reclamation and site stabilization.

4.6.2.3. Mitigation Measures

Use of a closed loop system will reduce surface disturbance minimize surface water impacts.

4.6.2.4. Residual Effects

Residual effects will similar to residual effects associated with wetlands.

4.7. Wetland/Riparian

4.7.1. Direct and Indirect Effects

Peak's closed loop proposal, with properly applied mitigation, should not adversely impact watershed values, including natural drainages. There is little to no evidence the proposal will adversely impact other water resources.

Watershed values, including natural drainages, would not be adversely impacted by the proposal with properly applied mitigation. Other water resources will not be adversely impacted by the proposal. Possible contamination effects of fresh water aquifers will be reduced through the use of tested casing, by setting casing at appropriate depths and by following safe repair procedures in the event of casing failure. Other downhole well operations are expected to cause minimal impacts using standard engineering practices.

The cumulative impacts of the proposed action, when considered with other existing and proposed development in the project area should not be significant. The project may provide a positive benefit using CBNG produced "waste" water beneficially for oil production while also slowly contributing to returning the local riparian and wetland waters to their long-term, natural state, by in part, reducing their contribution to flows. The application of mitigation measures will ensure that the incremental impacts of this well, when considered with any existing development are insignificant. Refer to the PRB FEIS for more information on cumulative impacts, 4-69 to 4-125.

4.7.2. Cumulative Effects

Cumulative effects to wetland/riparian areas from oil and gas development are discussed in the PRB FEIS, pp. 4-178 and 4-179. Proposed surface disturbances would result in temporary, construction-related impacts to wetlands which would be reclaimed through interim reclamation and site stabilization, as committed to by the operator and as required by the BLM in COAs.

Changes in surface water flow due to project disturbances associated with construction and operation activities could lead to increased erosion, increased sediment in streams, and changes in water levels in channels located within and near the project site. These impacts would be mitigated by expediently stabilizing the disturbance and reducing the amount of sediment reaching the streams.

4.7.3. Mitigation Measures

No crossings of wetland/riparian areas by linear features, such as pipelines, roads, and power lines are proposed with this action.

Use of a closed loop system will reduce surface disturbance minimize potential sediment deposition into the wetlands/riparian area.

The lower edge of soil or other material stockpiles will be located outside the active flood plain.

4.7.4. Residual Effects

Turbidity and sediment loading in the streams would probably increase due to erosion of project disturbed areas and sediment transport to the associated drainages due to storm water runoff. These impacts are mitigated by expediently stabilizing the disturbance and reducing the amount of sediment reaching the streams.

4.8. Invasive Species

4.8.1. Direct and Indirect Effects

The operator has committed to the control of noxious weeds and species of concern using the following measures identified in their Integrated Pest Management Plan (IPMP):

1. Control Methods, including frequency
2. Preventive practices
3. Education

Cheatgrass or downy brome (*Bromus tectorum*) and to a lesser extent, Japanese brome (*B. japonicus*) exist in the affected environment. These 2 species are found in such high densities and numerous locations throughout NE Wyoming that a control program is not presently feasible. The use of existing facilities along with the surface disturbance associated with construction of proposed access roads, pipelines, and related facilities would present opportunities for weed invasion and spread. The activities related to the performance of the proposed project would create a favorable environment for the establishment and spread of noxious weeds/invasive plants such as Scotch thistle, spotted knapweed and buffalo burr. However, expedient reclamation and other mitigation as required by BLM applied COAs will reduce potential impacts from noxious weeds and invasive plants.

4.8.2. Cumulative Effects

Cumulative effects resulting from noxious and invasive weed species are discussed in the PRB FEIS, p. 4-171. Species of concern identified in the IPMP, include the following: Scotch thistle, common cocklebur, buffalo bur, and spotted knapweed.

4.8.3. Mitigation Measures

The operator has committed to the control of noxious weeds and weed species of concern using measures identified in their IPMP. Successful reclamation through application of the operator's reclamation plans will discourage establishment of invasive species during operations. In addition, measures incorporated into the programmatic COAs listed in the COA document will further mitigate the potential spread and establishment of weed species.

The operator will be responsible for prevention and control of noxious weeds and weeds of concern on all areas of surface disturbance associated with this project (well locations, roads, water management facilities, etc.). Use of pesticides shall comply with the applicable Federal and State laws. Pesticides shall be used only in accordance with their registered uses and within limitations imposed by the Secretary of Interior. Prior to the use of pesticides on public land, the holder shall obtain from the BLM authorized officer written approval of a plan showing the type and quantity of material to be used, pest(s) to be controlled, method of application, location of storage and disposal of containers, and any other information deemed necessary by the authorized officer to such use.

Phased reclamation plans will be submitted to BLM for approval prior to individual well abandonment via a Notice of Intent (NOI) Sundry Notice. Individual facilities, such as well location and road need to be addressed in these plans as they are no longer needed. Individual items that will need to be addressed in reclamation plans include:

- Cuttings Pit closure (Close ASAP after suitably dry, but no later than 180 days from time of drilling unless an extension is given by BLM Authorized Officer.)
- Configuration of reshaped topography, drainage systems, and other surface manipulations
- Waste disposal
- Revegetation methods, including specific seed mix (pounds pure live seed/acre) and soil treatments (seedbed preparation, fertilization, mulching, etc.). On private surface, the landowner should be consulted for the specific seed mix.

- Other practices that will be used to reclaim and stabilize all disturbed areas, such as water bars, erosion fabric, hydro-mulching, etc.
- An estimate of the timetables for beginning and completing various reclamation operations relative to weather and local land uses.
- Methods and measures that will be used to control noxious weeds, addressing both ingress and egress to the individual well.
- Decommissioning/removal of all surface facilities
- Any mulch utilized for reclamation needs to be certified weed free.

Based on the implementation of the COAs, and the measures outlined within the MSUP and its associated plans including the IPMP and Reclamation Plan, no additional mitigation measures are recommended.

4.8.4. Residual Effects

Control efforts by the Operator would be limited to the surface disturbance associated the construction and operation of the project. Cheatgrass and other weed species that are present within non-physically disturbed areas of the project area are anticipated to continue to spread unless control efforts are expanded. Cheatgrass and to a lesser extent, Japanese brome (*Bromus japonicus*) are found in high densities and numerous locations throughout northeast Wyoming. Efforts are being made by BLM, USDA, WGFD and other partners at some small infestation areas are being treated but for the most part, control programs are not considered feasible at this time and these annual bromes will continue to be found within the project area.

4.9. Locatable Minerals

4.9.1. Direct and Indirect Effects

There are a total of 18 individual mining claims located in the same section as surrounding the 2 proposed oil wells. As indicated in Chapter 3, these mining claims were very likely located for uranium. A number of actual and proposed uranium projects (all using in-situ recovery, ISR) occur within up to about 20 miles of the proposed well location. Possible conflict(s) may occur between any uranium projects planned/underway and these proposed wells. For example, Pine Tree is a proposed uranium project whose boundary includes and surrounds these wells. It is unlikely, however, that this project will be developed for quite some time, due to recent lowering of uranium price and other uranium projects in the area are already producing or in development. For another example, AUC, LLC, is beginning the approval process for its proposed Reno Creek uranium project, and this project lies approximately 5 miles NE of Iberlin 1-9H and Iberlin 1-9TH location. Peak should ensure they've checked for uranium projects in the areas of these wells, and contact those companies. Uranium recovery would entail the addition of disturbance activities for construction of roads, facilities and well locations. Earth-moving activities associated with ISR uranium recovery are nearly the same for those of CBNG projects. It involves construction of surface facilities, access roads, well fields, and pipelines and would include clearing of top soil, land grading, and interim reclamation. There is potential for timing and/or location conflicts between the Peak's Iberlin 1-9H and Iberlin 1-9TH project and future uranium exploration and/or mining projects. Different situations may occur that could change the location or layout of the approved APDs or the infrastructure associated with the APDs. It is important that all companies potentially affected take the initiative to keep the others informed about their status and design plans for pipelines, electrical power, roads, so they may optimize their own project(s) without impeding the others' project(s) and thus preclude top-down federal or state solutions being imposed.

4.9.2. Cumulative Effects

Drilling of wells and installation of pipelines will occur. Low levels of traffic generated by construction activities and daily operations when the project is operational would not significantly increase traffic or accidents on roads in the vicinity. However, the addition of ISR uranium recovery project(s) within the

Project vicinity will add to the cumulative effect of soil disturbances and may delay interim and final reclamation on some of the roads proposed for use in Peak's horizontal oil well project.

4.9.3. Mitigation Measures

It is between the operators to coordinate their projects as the BLM may have little jurisdiction over this. In the event Peak alters one or both the approved oil wells' locations, then Peak will need to apply for the changes via Sundry Notice (Form No. 3160-5) and BLM will analyze it in a separate NEPA document.

4.9.4. Residual Effects

Residual effects across the Project area would include a relatively short-term loss of soil productivity within with the uranium project area(s). This would occur due to surface disturbances for installation or uranium well fields, roads, and associated infrastructure. As these uranium ISR projects are typically relatively short-term in length (8-15 years), long-term soil productivity should not be significantly affected. The PRB FEIS identified residual effects (p. 4-408) such as the loss of vegetative cover, despite expedient reclamation, for several years until reclamation is successfully established.

4.10. Fish and Wildlife

4.10.1. Big Game

4.10.1.1. Direct and Indirect Effects

The PRB FEIS analyzed impacts to big game, pp. 4-181 to 4-210. As discussed in that document, impacts to mule deer may occur through alterations in hunting and/or poaching, increased vehicle collisions, harassment and displacement, increased noise, increased dust, alterations in nutritional status and reproductive success, increased fragmentation, loss or degradation of habitats, reduction in habitat effectiveness, and declines in populations. The current populations for pronghorn, white-tailed deer, and mule deer are above, above, and below WGFD goals, respectively.

4.10.1.2. Cumulative Effects

The cumulative effects associated with Alternative B, are within the analysis parameters and impacts described in the PRB FEIS. Refer to the PRB FEIS, pp. 4-181 to 4-215, for details on expected cumulative impacts.

4.10.1.3. Mitigation Measures

BLM proposes no mitigation with Alternative B.

4.10.1.4. Residual Effects

The incorporated design features and mitigation will not eliminate all project effects. Irretrievable impacts are listed in the PRB-EIS p. 4-408 that include loss of wildlife habitats beyond the life of the project, depending on the success of reclamation and decreased wildlife populations. Habitat effectiveness, nutrition status, and reproductive success of big game species would decrease (PRB-EIS, p. 4-406).

4.10.2. Plains Sharp-tailed GrouseDirect and Indirect Effects

The PRB FEIS analyzed direct and indirect impacts to sharp-tailed grouse from oil and gas development, pp. 4-221 to 4-225. Sharp-tailed grouse may avoid habitats adjacent to the project area. BLM expects no impact to the nearest known lek due to its distance from the project.

4.10.2.1. Cumulative Effects

The cumulative effects associated with Alternative B are within the analysis parameters described in the PRB FEIS. Refer to the PRB FEIS for details on expected cumulative impacts, pp. 4-225 to 4-226.

4.10.2.2. Mitigation Measures

BLM proposes no mitigation with Alternative B.

4.10.2.3. Residual Impacts

BLM anticipates no residual effects.

4.10.3. Raptors

4.10.3.1. Direct and Indirect Effects

Direct and indirect impacts to raptors, from oil and gas development, are analyzed in the PRB FEIS, pp. 4-216 to 4-221. No direct impacts to raptor nests are anticipated from the project. However, indirect impacts may occur as a result of project activities. This project will result in disturbance in proximity of nesting raptors, including direct loss of foraging habitats and indirect losses associated with declines in habitat effectiveness.

All raptors using nests in the vicinity of the project will likely be impacted to some extent by the human disturbance associated with operation and maintenance. Human activities in close proximity to active raptor nests may interfere with nest productivity. Romin and Muck (1999) indicate that activities within 0.5 mile of a nest are prone to cause adverse impacts to nesting raptors. If mineral activities occur during nesting, they could be sufficient to cause adult birds to remain away from the nest and their chicks for the duration of the activities. This absence can lead to overheating or chilling of eggs or chicks and can result in egg or chick mortality. Prolonged disturbance also can lead to the abandonment of the nest by the adults. Routine human activities near these nests also can draw increased predator activity to the area and resulting in increased nest predation.

There are no known raptor nests located within 0.5 miles of project components, however, suitable nesting habitat is present. To reduce the risk of decreased productivity or nest failure, the BFO requires a 0.5-mile radius timing limitation during the breeding season around active raptor nests and recommends all infrastructures requiring human visitation be located in such a way as to provide adequate biologic buffer for nesting raptors. A biologic buffer is a combination of distance and visual screening that provides nesting raptors with security such that they will not be flushed by routine activities. Construction, drilling and production could deter raptors from selecting a nest site in the vicinity of the wells' location.

If Peak would voluntarily restrict well site visits and work-over operations at the Iberlin 1-9H and Iberlin 1-9TH well location during the raptor breeding season, raptor may not avoid selecting the area for nesting. The operator did not volunteer any such mitigation and such a measure is more restrictive than BLM-BFO land use plans provide for. Additional direct and indirect impacts to raptors, from oil and gas development, are analyzed in the PRB FEIS (pp. 4-216 to 4-221).

4.10.3.2. Cumulative Effects

It is likely that impacts to raptors will be greater than those analyzed in this plan as the operator proposes up to 2,093 feet of overhead power line to supply power to the wells but the powerline will be constructed by a "third party" and not the Operator so it is unclear where those powerlines will fall on the landscape making it impossible at this time to adequately analyze the impacts of the overhead power lines. The cumulative effects associated with Alternatives B are within the analysis parameters and impacts described in the PRB FEIS, p. 4-221.

4.10.3.3. Mitigation Measures

Measures intended to avoid, minimize, and mitigate impacts to raptors are outlined in the COA document, including operator committed measures and site-specific COAs. For example, to reduce the risk of adverse impacts to nesting raptors, no surface-disturbing activity will occur prior to surveys to document nest occupancy shall be conducted by a biologist following BLM protocol, between April 15 and June 30. All survey results shall be submitted in writing to a Buffalo BLM biologist and approved prior to surface-disturbing activities. Surveys outside this window may not depict nesting activity. If a survey identifies

active raptor nests, a 0.5 mile timing buffer will be implemented. The timing buffer restricts surface-disturbing activities within 0.5 mile of occupied raptor nests from February 1 to July 31.

4.10.3.4. Residual Impacts

There would be an increase in traffic, construction activity, and human presence in the area throughout the life of the project that would affect the quality of the area for nesting raptors. Disturbance to nesting raptors can cause nest failure, nest abandonment, and unsuccessful fledging of young (PRB FEIS, p. 4-218). Timing limitations would protect nests from disturbance during the construction phase of the project. Timing limitations will not apply during well operation, well monitoring and maintenance activities and would possibly discourage raptors from using nest locations or abandon the nest if a pair had initiated nesting prior to such disruptive activities occurring.

4.10.4. Migratory Birds

4.10.4.1. Direct and Indirect Effects

The PRB FEIS discussed direct and indirect effects to migratory birds, pp. 4-231 to 4-235. The PRB FEIS states on page 4-231, "Surface disturbance associated with construction, operation, and abandonment of facilities, including roads, has the potential to result in direct mortality of migratory birds. Most birds would be able to avoid construction equipment; however, nests in locations subject to disturbance would be lost, as would any eggs or nestlings." Direct mortality of a bird or destruction of an active nest due to construction activities would result in a "take" as defined (and prohibited) by the MBTA, a non-discretionary statute, and in turn a violation of the law. Disturbance of habitat in the project area is likely to impact migratory birds. Native habitats will be lost directly with the construction of the well, access road, and buried power. Surface disturbing activities that occur in the nesting season may kill migratory birds. Prompt re-vegetation of short-term disturbance areas should reduce habitat loss impacts. Pad construction, drilling, and to a lesser degree production, will displace edge sensitive migratory birds from otherwise suitable habitat adjacent to the well pad. Drilling and construction noise can be troublesome for songbirds by interfering with the males' ability to attract mates and defend territory, and the ability to recognize calls from conspecifics (BLM 2003).

Habitat fragmentation will result in more than just a quantitative loss in the total area of habitat available; the remaining habitat area will also be qualitatively altered (Temple and Wilcox 1986). Ingelfinger (2004) identified that the density of breeding Brewer's sparrows declined by 36% and breeding sage sparrows declined by 57% within 100 m of dirt roads in a natural gas field. Effects occurred along roads with light traffic volume (less than 12 vehicles per day). The increasing density of roads constructed in developing natural gas fields exacerbated the problem creating substantial areas of impact where indirect habitat losses through displacement were much greater than the direct physical habitat losses. Those species that are edge-sensitive will be displaced further away from vegetative edges due to increased human activity, causing otherwise suitable habitat to be abandoned. If the interior habitat is at carrying capacity, then birds displaced from the edges will have no place to relocate. One consequence of habitat fragmentation is a geometric increase in the proportion of the remaining habitat that is near edges (Temple 1986). In severely fragmented habitats, all of the remaining habitat may be so close to edges that no interior habitat remains (Temple and Cary 1988). Over time, this leads to a loss of interior habitat species in favor of edge habitat species. Other migratory bird species that use the disturbed areas for nesting may be disrupted by the human activity, and nests may be destroyed by equipment.

During the onsites, the BLM biologist identified suitable nesting habitat for several BLM sensitive sagebrush obligates to be sparse at the well site. The habitat at the well location and along the proposed access road lacks any sagebrush and dominated by grass species. Vegetative cover is low with 35-50% of the surface being bare ground as a result of long-term, intense sheep grazing operations severely reduced the habitat quality. Migratory bird species in the PRB nest in the spring and summer and are vulnerable to the same effects as GSG and raptor species. Though no timing restrictions are typically applied

specifically to protect migratory bird breeding or nesting, where GSG or raptor nesting timing limitations are applied, nesting migratory birds are also protected. Where these timing limitations are not applied and migratory bird species are nesting, migratory birds are vulnerable. Surface disturbing activities associated with the Iberlin 1-9H and Iberlin 1-9TH well will not have GSG or raptor timing limitations applied, thereby providing no protection to migratory birds.

Peak proposes using a heater treater during the production phase of the project. Heater treaters, and similar facilities, having vertical open-topped stacks or pipes can attract birds. Those facilities without exclusionary devices can pose a mortality risk. Once birds crawl into the stack, escape can become difficult and the bird may become trapped (U.S. v. Apollo Energies Inc., 611 F.3d 679 (10th Cir. 2010); see also, Colorado Oil and Gas Commission, Migratory Bird Policy, accessed February 13, 2012).

Use of a closed loop system will minimize impacts to the migratory birds that may become trapped in an open drilling/reserved pit or exposed to hazardous vapors from drilling fluids.

4.10.4.2. Cumulative Effects

The cumulative effects associated with Alternative B, are within the analysis parameters and impacts described in the PRB FEIS. For details on expected cumulative impacts, refer to the PRB FEIS, p. 4-235.

4.10.4.3. Mitigation Measures

BLM proposes no timing limitations on surface disturbing activities for migratory birds. Use of a closed loop system will minimize impacts to the migratory birds that may become trapped in an open drilling/reserved pit or exposed to hazardous vapors from drilling fluids. Peak made no specific commitments to exclude birds from exhaust stacks (particularly with a circumference of greater than 2 inches), pits, ponds, and open-topped tanks, and other facilities that may pose a threat. Therefore, BLM will apply a COA to ensure that migratory birds are excluded from all facilities that pose a mortality risk, including, but not limited to, heater treaters, flare stacks, and secondary containment where escape may be difficult or hydrocarbons or toxic substances are present.

4.10.4.4. Residual Effects

Although it is unlikely that migratory birds would nest in the area that construction would occur, any migratory bird species and individuals that are, may have nests destroyed, or be disturbed, by construction activities. Disruption from construction activities may also cause abandonment of active nests. If Peak does not properly maintain all exclusionary devices implemented for the project, birds may remain at risk of direct mortality.

4.11. Threatened, Endangered, Candidate, Special Status (Sensitive) Species

BLM summarized the effects to threatened, endangered, and candidate species in Table 4.3, below and described them in the PRB FEIS, pp. 4-250 to 4-257.

Table 4.3. Summary of Threatened and Endangered Species Habitat and Project Effects

Common Name (scientific name)	Habitat	Presence	Project Effects	Rationale
Threatened				
Ute ladies'-tresses orchid	Riparian areas with permanent water	NS	NE	Habitat is no present. No known Ute ladies'-tresses orchid or seed source exists within the drainage.

Common Name (scientific name)	Habitat	Presence	Project Effects	Rationale
Candidate				
Greater Sage-grouse	Basin-prairie shrub, mountain-foothill shrub	K	WIPV	Suitable nesting and brood rearing habitat is present and the project will negatively affect sage-grouse.

Presence	Project Effects
K – Known, documented observation in project area. **NS -** Habitat suitable but species is not suspected to occur within the project area.	**NE** – No Effect **WIPV -** Will Impact Individuals or Habitat with a consequence that the action may contribute to a trend towards Federal listing or cause a loss of viability to the population or species.

4.11.1. Threatened and Endangered Species

4.11.1.1. Ute Ladies'-Tresses Orchid (ULT)

4.11.1.1.1. Direct and Indirect Effects

Suitable habitat is not present in the project area and there are no known populations of Ute ladies'-tresses orchid in the South Prong Belle Fourche River drainage. Implementation of the proposed project would not affect the Ute ladies'-tresses orchid.

4.11.1.1.2. Cumulative Effects

The PRB FEIS discussed the cumulative effects to ULT, pp. 4-253 to 4-254).

4.11.1.1.3. Mitigation Measures

BLM proposes no mitigation with Alternative B.

4.11.1.1.4. Residual Effects

BLM anticipates no residual effects.

4.11.2. Candidate Species

4.11.2.1. Greater Sage-Grouse (GSG)

4.11.2.1.1. Direct and Indirect Effects

The 2010 FWS listing decision discussed impacts to GSG associated with energy development in detail. Impacts to GSG are generally a result of loss and fragmentation of sagebrush habitats associated with roads and infrastructure. Research indicates that yearling GSG hens also avoid nesting in developed areas, while older hens will continue nesting attempts in impacted habitats (Lyon and Anderson 2003, Holloran 2005, Holloran et al. 2010, FWS 2010).

The Iberlin 1-9H and Iberlin 1-9TH well location, access road and associated infrastructure are not located within 2 miles of occupied GSG leks or suitable nesting habitat (See Figure 4.1). Construction of the well pad, access road and overhead powerline (not with the access road) will not result in a direct loss of GSG habitat. For a specific breakdown of proposed disturbance see Table 2.2. Alternative B. Implementation of the project will not adversely impact nesting habitat, both through direct loss and avoidance of the area by GSG.

4.11.2.1.2. Cumulative Effects

There are currently 9,114 existing wells according to the WOGCC database, August 1, 2013 (2,634 are abandoned) in the cumulative impact assessment area, an area of 1,538 square miles, which amounts to a density of approximately 7.3 wells per square mile. Currently, there are approximately 764 proposed wells (WOGCC, August 1, 2013) (including the 1 from this project) within 12.4 miles of the 24 GSG leks. With the addition of the proposed wells, the well density within 12.4 miles of the leks, 8 times the 1

well per square mile recommendation made by the State Wildlife Agencies' Ad Hoc Committee for Sage-Grouse and Oil and Gas Development. Table 4.4, below, shows the well density within the 12.4 mile analysis area. Table B1, in Appendix B, further describes well density at 12.4 miles by individual lek.

Table 4.4. Well Density within the 12.4 Mile Impact Area

Analysis Area	Area mi^2	# of Existing & Approved Wells	Well Density (Existing)	Proposed Wells	Well Density (including proposed)
buffer of leks within 12.4 miles of the well	1,242	9,114	7.3 wells/mi^2	764	8.0 wells/mi^2

The 2012 BLM-contracted population viability analysis for the Northeast Wyoming GSG found there remains a viable population of GSG in the PRB (Taylor et al. 2012). Threats from energy development and West Nile Virus (WNv) are impacting future viability (Taylor et al. 2012). The study indicated that effects from energy development, as measured by male lek attendance, are discernible out to a distance of 12.4 miles. Figure 4.2 below illustrates the distribution of existing and proposed wells in relation to those 24 leks that occur within 12.4 miles of the Iberlin 1-9H and Iberlin 1-9TH well location.

Figure 4.1. Photo of the Habitat Quality at the Iberlin 1-9H and Iberlin 1-9TH Location

Figure 4.1. Greater Sage-Grouse Nesting Habitat

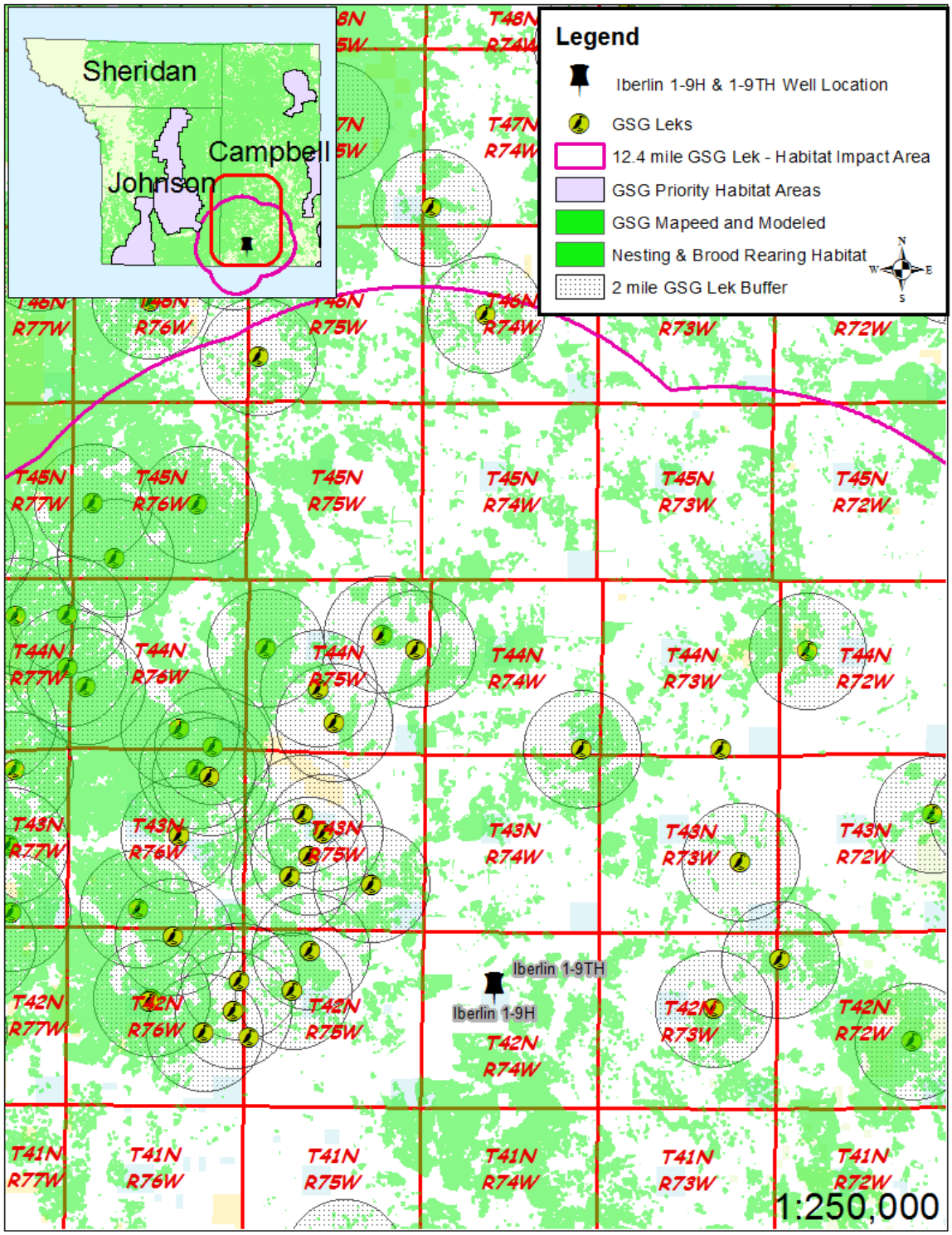

Figure 4.2. Wells within the Greater Sage-Grouse Affected Area

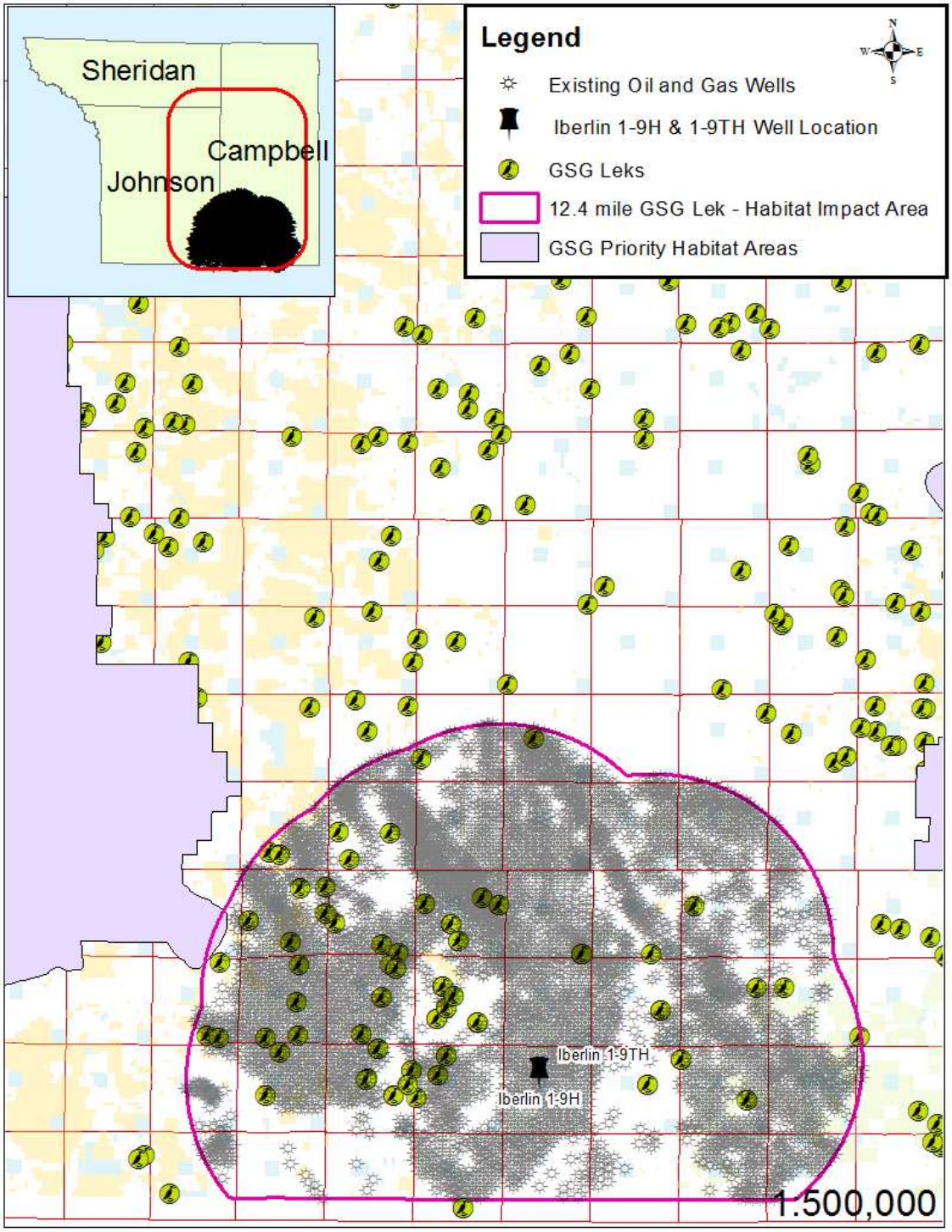

Studies document the additive impacts of energy development and WNv as a threat to GSG persistence in the PRB (Taylor et al. 2012, Garton et al. 2011). The cumulative and synergistic effects of CBNG development and WNv in the PRB area will continue to impact the local GSG population, causing further declines in lek attendance, and could result in local extirpation: "[f]indings reflect the status of a small remaining GSG population that has already experienced an 82% decline within the expansive energy

fields (Walker et al. 2007a), a level of impact that has severely reduced options for delineating priority habitats that are large enough and in high enough quality habitats to sustain populations." (Taylor et al. 2012).

Current well densities reduced the function of PRB priority habitats, affecting all of the remaining active leks within core (Taylor et al. 2012). Continued energy development around the priority habitats will continue to impact their remaining value. Declines in active leks and male attendance indicate that the WNv outbreaks and energy development reduce GSG populations and that they interact to exacerbate population declines. The effects of one WNv outbreak year could cut a population in half. Absent a WNV outbreak, or another stochastic event of similar magnitude, immediate extirpation is unlikely. Results suggest that if current oil and gas development rates continue, they may compromise future viability of NE Wyoming GSG, with an increased chance of extirpation with additional WNv outbreaks (Taylor et al. 2012).

It is likely that impacts to GSG habitat will be greater than those analyzed in this EA as the Operator proposes 2,093 feet of overhead power lines across open rangeland to supply power to the well The powerlines will be constructed by a "third party" and not the operator so it is unclear where those powerlines will fall on the landscape making it impossible at this time to adequately analyze the impacts of the overhead power lines. BLM's preference is to bury the powerlines in or adjacent to a surface disturbance such as a road or pipeline. The operator plans to install buried gas and/or oil pipelines to the well location if the well is productive that may or may not follow the access road.

4.11.2.1.3. Mitigation Measures

In order to reduce the impacts to GSG associated with noise, construction, and human disturbance resulting from implementation of the proposed project, BLM will consider a timing limitation (March 15-June 30) on surface-disturbing activities, however, the lack of suitable nesting and brood rearing habitat adjacent to the project area does not warrant such protective measures.

The BLM agreed to implement the State of Wyoming's Sage-grouse Core Area Strategy (IM 2012-019); which protects approximately 80 percent of GSG leks in the State. However in the PRB approximately 20 percent of leks are in core designated habitats, and the shape and size of the Buffalo priority habitats limits the protections afforded these leks. Additional mitigation may be necessary to maintain populations in the PRB. Such mitigation could include; increasing WNv control efforts, avoiding/minimizing surface water discharges, enhancing priority habitat habitat quality, accelerating the pace of development by modifying or eliminating timing restrictions in some areas, efficiently suspending leases in (or habitats supporting) core, identifying areas in core, or undeveloped areas adjacent to core, that are appropriate for off-site mitigation, reducing supplemental predator habitat, and increased reclamation.

Aggressive reclamation of plugged and abandoned well fields, combined with habitat enhancements in functional core and supporting areas, may provide a population of birds to re-populate areas that can be successfully reclaimed.

GSG habitat restoration efforts in the PRB are ongoing. The BLM identified historical GSG population centers that are ready for oil and gas reclamation where stakeholders will apply enhanced reclamation techniques. The intent is maintaining and enhancing those areas with remaining GSG and increase suitability of currently uninhabited areas that are important for connectivity. The WY BLM initiated the PRB Restoration Program to implement strategies for accelerated reclamation and GSG habitat restoration in areas affected by federal oil and gas developments.

BLM proposes no timing limitations on surface disturbing activities to minimize impacts to GSG for this Project.

4.11.2.1.4. Residual Effects

The PRB FEIS predicted that the PRB oil and gas development would have significant impacts to the GSG population. The impact of the Iberlin 1-9H and Iberlin 1-9TH development cumulatively contributes to the potential for local extirpation yet its effect is acceptable because it is outside priority habitats and is within the parameters of the PRB FEIS/ROD and current BLM and Wyoming GSG conservation strategies.

Current research does not identify specific components of energy development that BLM or operators can alter to measurably decrease impacts to GSG or functionality of their habitats. Even in areas where BLM applied a variety of mitigation measures, negative population impacts are still measurable when well density exceeds approximately 1 well per square mile. Management of energy development based on current priority habitat configurations and associated lease stipulations, conditions of approval, and best management practices (BMPs), may not provide enough contiguous habitats sufficient to protect the remaining population viability of PRB GSG without a substantial investment in restoration. The PRB FEIS based its analysis and decision, in part, on the removal of all CBNG wells and most infrastructures at final well abandonment after the CBNG played out 10-15 years after drilling. In areas that are or were important to GSG, leaving infrastructure on the landscape may hamper restoration efforts (Taylor et al. 2012).

4.11.3. Special Status (Sensitive) Species (SSS)

The PRB FEIS discusses impacts to sensitive species on pp. 4-257 to 4-265. BLM will take actions to meet the policies set forth in sensitive species policy (BLM Manual 6840). BLM Manual 6840.22A states that "The BLM should obtain and use the best available information deemed necessary to evaluate the status of special status species in areas affected by land use plans or other proposed actions and to develop sound conservation practices. Implementation-level planning should consider all site-specific methods and procedures which are needed to bring the species and their habitats to the condition under which the provisions of the ESA are not necessary, current listings under special status species categories are no longer necessary, and future listings under special status species categories would not be necessary."

The effects to sensitive species resulting from implementation of the project are in Table B-2 in Appendix B. Information regarding bald eagles is discussed below.

4.11.3.1. Bald Eagle

4.11.3.1.1. Direct and Indirect Effects

Impacts to bald eagles are discussed in the PRB FEIS, pp. 4-251 to 4-253. A study completed in 2004 suggests that two-tracks and improved project roads pose minimal collision risk to bald eagles. In 1 year of monitoring road-side carcasses, the BFO reported 439 carcasses, 226 along interstates (51%), 193 along paved highways (44%), 19 along gravel county roads (4%), and 1 along an improved CBNG road (less than 1%) (Bills 2004). No road-killed eagles were reported; bald and golden eagles were observed feeding on 16 of the reported road-side carcasses (less than 4%). The risk of big-game vehicle-related mortality along CBNG project roads is insignificant or discountable, when combined with the lack of bald eagle mortalities associated with highway foraging, leads to the conclusion that CBNG project roads do not affect bald eagles. No bald eagle nests or winter roosts were identified within 1 mile of the project area. Suitable habitat existing within the project area South Prong Belle Fourche River is sparse. The Project lies 1.2 miles south of the Belle Fourche River where roosting bald eagle have been observed during 2008 and 2012 surveys. The nearest recorded observation was a single adult perched on a powerline pole 1.8 miles west of the well location in 2008. There is an existing powerline 0.4 miles south to the well location. Implementation of the proposed project would not likely adversely impact bald eagle nesting or roosting due to the lack of suitable nesting and roosting structure available within a 1 mile of the well location but eagles would likely avoid the roosting on power poles within 1 mile of the well site during construction, drilling and fracing operations.

4.11.3.1.2. Cumulative Effects

The PRB FEIS discussed the cumulative effects for bald eagles, pp. 4-251 to 4-253.

4.11.3.1.3. Mitigation Measures

To reduce the risk of disruption to the winter roosting activities of bald eagles, BFO will consider a timing limitation on surface disturbing activities within 1.0 mile of winter roost habitat (Belle Fourche River) between November 1and April 1 annually, until habitat surveys document eagles are not roosting in the area for that season.

To reduce the risk of disruption to nesting bald eagles, BFO will consider a timing limitation on surface disturbing activities within 1.0 miles of bald eagle nesting habitat (Belle Fourche River) between February 1 and August 15 annually, until habitat surveys document eagles are not nesting in the area for that season.

4.11.3.1.4. Residual Effects

Even with timing limitations, habitat may be degraded to a point that the area no longer provides habitat requirements for wintering bald eagles. A 1.0 mile timing restriction on construction activities does nothing to protect valuable habitats from disturbance and also does not mitigate impacts associated with fee development, and habitat may be degraded over time to such an extent that productivity of bald eagles may be reduced, resulting in possible violations of the Bald and Golden Eagle Protection Act.

4.11.3.2. Ferruginous Hawk

4.11.3.2.1. Direct and Indirect Effects

The PRB FEIS discusses impacts, including direct and indirect effects, to sensitive species on pp. 4-257 to 4-273. Additional impacts expected from project actions are described in the Raptor Section, above. Additionally, due to the territorial nature of ferruginous hawks, there is greater potential for disturbance to nesting ferruginous hawks. However, no active ferruginous hawk nests were identified during the past survey efforts (See Table 3.3) (ICF 2012) and therefore, adverse impacts to this species are not anticipated.

4.11.3.2.2. Cumulative Effects

The PRB FEIS discusses impacts, including cumulative effects, to sensitive species on pp. 4-257 to 4 273.

4.11.3.2.3. Mitigation Measures

An annual survey will be required for nesting raptors and a TLS will apply (February 1 through July 31) if an active ferruginous hawk nest is located.

4.11.3.2.4. Residual Effects

Residual effects will be similar to residual effects of other raptors.

4.11.3.3. Western Burrowing Owl

4.11.3.3.1. Direct and Indirect Effects

There are no known burrowing owl nests within the project area. Direct impacts to prairie dog colonies are discussed in the black-tailed prairie dog section below. Impacts expected from project actions are the same as those described on p. 4-263 of the PRB FEIS. In addition to the impacts listed in these sections, use of roads may increase owl vulnerability to vehicle collision.

4.11.3.3.2. Cumulative Effects

The cumulative impacts to burrowing owls are similar to those discussed for all raptor and migratory bird species and are discussed in the PRB FEIS, pp. 4-221 and 4-235.

4.11.3.3.3. Mitigation Measures

The Thunder Basin National Grasslands (TBNG), Forest Service (FS) analyzed and used a 0.25 mile timing restriction buffer zone on surface disturbing activities for burrowing nest locations during their nesting season (April 15 to August 31) in this same ecosystem of sagebrush-short grass prairie. BLM finds the minor distance from the TBNG is immaterial in adopting the FS analysis and applying it to the substantially similar habitat here. Instruction Memorandum No. 2006-197, directs field offices to "use the least restrictive stipulations that effectively accomplish the resource objectives or uses." Alteration of the general raptor nest timing limitation (Feb 1 to July 31) to a more specific burrowing owl nesting season timing limitation will effectively reduce the vulnerability of owls to collision while shortening the timing restriction period to 4.5 months from 6.5 months, and from 0.5 mile to 0.25 mile. Burrowing owls will benefit from the general raptor nest timing limitation (Feb 1 to July 31). If a burrowing owl nest is observed during seasonal raptor surveys, then the more specific burrowing owl nesting season timing limitation (April 15 to August 31) will apply.

4.11.3.3.4. Residual Effects

There would be an increase in traffic, construction activity, and human presence in the area throughout the life of the project that would affect the quality of the area for nesting burrowing owls. Timing limitations during the construction phase of the project would protect nests from disturbance, but there would be activities during well operation that may discourage burrowing owls from nesting near the affect area locations.

4.11.3.4. Mountain Plover

4.11.3.4.1. Direct and Indirect Effects

Direct and indirect effects to mountain plover are discussed in the PRB FEIS, pp. 4-254 to 4-255. Suitable mountain plover habitat is limited to the inactive prairie dog colony within the project area. Impacts to prairie dog colonies are discussed in the black-tailed prairie dog effects Section, of this document. No mountain plover were observed in the area from surveys conducted in 2013 (GMEC 2013) and are not suspected to be present.

Mountain plovers seek habitat that may be of poor quality when loss or alteration of their natural breeding habitat (predominantly prairie dog colonies) occurs, such as heavily grazed land, burned fields, fallow agriculture lands, roads, oil and gas well pads, and pipelines. These areas could become reproductive sinks. Although adult mountain plovers may breed in areas with poor quality habitat, lay eggs and hatch chicks; however, the young may not reach fledging age due to the poor quality of the habitat.

Recent analysis of the FWS Breeding Bird Survey data suggests that mountain plover populations have declined at an annual rate of 3.7 percent a year over the last 30 years, which represents a cumulative decline of 63 percent during the last 25 years (Knopf and Rupert 1995).

Use of roads and disturbed construction areas by mountain plovers may increase their vulnerability to vehicle collision. Designing roads for a travel speed up to 25 miles per hour provides drivers an opportunity to notice and avoid mountain plovers and allow mountain plovers sufficient time to escape from approaching vehicles.

4.11.3.4.2. Cumulative Effects

It is likely that impact to mountain plovers will be greater than those analyzed in this plan as the operator proposes up to 2,093 feet of overhead power line to supply power to the well but the powerline will be

constructed by a "third party" and not the operator so it is unclear where those powerlines will fall on the landscape making it impossible at this time to adequately analyze the impacts of the overhead power lines.

The cumulative impacts to mountain plovers are discussed in the PRB FEIS.

4.11.3.4.3. Mitigation Measures

BLM proposes no mitigation with Alternative B.

4.11.3.4.4. Residual Effects

There is potential for plovers to be impacted by project-related traffic outside the project boundary and a potential for impacts if individuals were undetected at the time of survey.

4.11.3.5. Black-tailed Prairie Dog

4.11.3.5.1. Direct and Indirect Effects

The small prairie dog colony GMEC observed northeast the Iberlin 1-9H and Iberlin 1-9TH well location in 2013 appears to be inactive. It is possible that the private surface owner poisoned the prairie dogs to improve grazing for cattle and the site is now over grown with vegetation. Aerial imagery of the site supports this. The PRB FEIS discusses impacts to black-tailed prairie dog on pp. 4-255 and pp. 4-256.

4.11.3.5.2. Cumulative Effects

Throughout Northeastern Wyoming black-tailed prairie dogs are poisoned on private lands. BLM does not poison prairie dogs and as such those lands, along with FS National Grasslands, have become essential to the species.

4.11.3.5.3. Mitigation Measure

BLM proposes no mitigation with Alternative B.

4.11.3.5.4. Residual Effects

The PRB FEIS discusses residual effects to sensitive species on pp. 4-257 to 4-273.

4.12. West Nile Virus

4.12.1. Cumulative Effects

There are many sources of native standing water throughout the PRB that add mosquito habitat. Summer thunderstorms, that pool water for more than 4 days in hot weather, can result in large Culex mosquito hatches. Other sources of water include; natural flows, livestock watering facilities, coal mining operations, and human outdoor water use and features in and around communities.

4.12.2. Mitigation Measures

The IPMP prepared by GMEC for Peak did not discuss West Nile. No additional mitigation measures are required.

4.12.3. Residual Effects

With over 3,300 existing stock reservoirs permitted by WYSEO and countless others that are not permitted as well as shallow pools along brood bottom drainages spread across the Powder River Basin, it is likely that the Culex mosquito will persist and continue to be a threat to humans, livestock and wildlife in northeast Wyoming.

4.13. Cultural Resources

4.13.1. Direct and Indirect Effects

No historic properties will be impacted by the proposed project. Following the Wyoming State Protocol

Section VI(A)(1) the BLM electronically notified the Wyoming State Historic Preservation Officer (WSHPO) on August 12, 2013 that no historic properties exist within the area of potential effect. If any cultural values [sites, artifacts, human remains (Appendix L PRB FEIS and ROD)] are observed during operation of this lease/permit/right-of-way, they will be left intact and the Buffalo Field Manager notified. Further discovery procedures are explained in the Standard COA (General)(A)(1).

4.13.2. Cumulative Effects

Construction and development of oil and gas resources impacts cultural resources through ground disturbance, unauthorized collection, and visual intrusion of the setting of historic properties. This results in fewer archaeological resources available for study of past human life-ways, changes in human behavior through time, and interpreting the past to the public. Additionally, these impacts may compromise the aspects of integrity that make a historic property eligible for the National Register of Historic Places. Recording and archiving basic information about archaeological sites and the potential for subsurface cultural materials in the proposed project area serve to partially mitigate potential cumulative effects to cultural resources.

Fee actions constructed in support of federal actions can result in impacts to historic properties. Construction of large plans of coalbed natural gas development on split estate often include associated infrastructure that is not permitted through BLM. Project applicants may connect wells draining fee minerals, or previously constructed pipelines on fee surface with a federal plan of development. BLM has no authority over such development which can impact historic properties. BLM has the authority to modify or deny approval of federal undertakings on private surface, but that authority is limited to the extent of the federal approval. Historic properties on private surface belong to the surface owner and they are not obligated to preserve or protect them. The BLM may go to great lengths to protect a site on private surface from a federal undertaking, but the same site can be legally impacted by the landowner at any time. The cumulative effect of numerous federal approvals can result in impacts to historic properties.

Archeological inventories reveal the location of sites and although the BLM goes to great lengths to protect site location data, information can potentially get into the wrong hands. BLM authorizations that result in new access can inadvertently lead to impacts to sites from increased visitation by the public.

4.13.3. Mitigation Measures

If operators observe any cultural values [sites, artifacts, human remains (Appendix L PRB FEIS and ROD)] during operation of this lease/permit/right-of-way, they will be left intact and the Buffalo Field Manager notified. Standard COA (General)(A)(1) further explains discovery procedures.

4.13.4. Residual Effects

During the construction phase, there will be numerous crews working across the project area using heavy construction equipment without the presence of archaeological monitors. Due to the extent of work and the surface disturbance caused by large vehicles, it is possible that unidentified cultural resources can be damaged by construction activities. The increased human presence associated with the construction phase can also lead to unauthorized collection of artifacts or vandalism of historic properties.

4.14. Transportation

4.14.1. Direct and Indirect Effects

The Peak proposes an additional 1,4,04 feet (0.27 miles) of proposed crown and ditch resource roads. The main access to the well location is off of Wyoming State Highway 387. The road is proposed with a minimum travel way surface of 16 feet. The design speed for the road is 20 mph with an average daily traffic (ADT) ranging from 2 to 20 trips per day. Dust may become a periodic driving visibility and human health issue. The crown and ditch road has a maximum grade of 4%. There is 1 existing culvert 18 inches in diameter and additional cross drain culverts will be added as needed during construction.

Culvert installation will follow the typical installation details provided in the engineered diagrams. Additional culverts and wing ditches may be needed through the life of the project and will be addressed via the sundry process.

Transportation within the project area would be affected on a long-term basis. The proposed development will increase the ADT on all of the roads within the Project area for the duration of well production. Well lifespan is anticipated to be 10 to 20 years. During this period both the proposed and existing roads will have accelerated erosion and sedimentation, increased dust, dust abatement, higher noise levels, and additional traffic increasing accident potential. The roads will be used by the local ranchers, oil and gas personnel, federal government personnel, and to a lesser extent, the general public for recreational purposes. Long term impacts would be if the private land owners wish to keep the roads when the wells are no longer in production for their ranching operation.

The two main surfacing materials used in the PRB are gravel and clinker (sometimes referenced as scoria). Gravel is a hard/durable material and by definition it is loose rock that has a particle distribution from 0.8 to 2.5 inches in diameter. One cubic yard of gravel typically weighs around 3,000 pounds. Clinker rock is a red-brown shale that has been baked and fused by in situ burning of underlying coal. Clinker rock found in the PRB (called porcelanite) has similar properties to ceramic; it readily breaks down into smaller fragments and has sharp edges when broken. Its weight varies depending upon the parent material but it usually is fairly light and has a specific gravity greater than one.

Vehicles have better traction with a road when the surfacing material is compacted, creating a safer driving surface. Because clinker rock is a soft, non-durable, material, during compaction it breaks down into dust rather than being compacted. It typically lacks a distribution of particle sizes. Regular gravel without gradation parameters is a hard durable material but lacks the distribution of particle sizes required for compaction. Whereas gravel from crushed aggregate that is screened to meet Gradation W parameters, is a hard durable material that has a distribution of particle sizes that are designed to interlock when compacted - creating a solid driving surface. A solid driving surface also promotes sheet flow of surface run-off directing water away from the road; whereas clinker rock tends to promote infiltration into the road bed due to the porosity of burnt shale resulting in rutting and erosion. The benefit of keeping water off or away from the road is to lessen maintenance costs.
Although it is less suitable material for road surfacing, clinker rock is more readily available and less costly. There are fewer gravel sources and gravel is more costly due to the supply and demand as well as hauling fees.

4.14.2. Cumulative Effects

Conditions of existing roads in the project area are highly variable. Roads generally are unpaved, and are constructed of native soils rated as marginal construction material. Mobilization of drilling and construction equipment relies on semi-trucks with trailers typically designed for use on paved roads and highways. The gross vehicle weight of these combination vehicles often exceeds 80,000 pounds with drilling rigs exceeding 100,000 pounds. There is concern that the use of these vehicles, especially when loaded, on roads not completely constructed leads to a higher than average potential for motor-vehicle accidents.

4.14.3. Mitigation Measures

All constructed road segments will be completed, including any culverts, low water crossings and required surfacing, before the drilling rig or other drilling equipment moves onto the pad.

The operator is responsible for having the licensed professional engineer(s) certify that the actual construction of the road meets the design criteria and is constructed to Bureau standards.

BLM will apply a COA that requires the operator to provide for construction oversight of the road and well pad. In addition, the operator will be required to contact the BLM at least 4-days prior to construction to provide BLM the opportunity to complete onsite construction inspection. Peak may mitigate excessive dust with magnesium chloride or other treatments.

4.14.4. Residual Effects

Transportation use along the roads would be converted either for the duration of the well operation to primarily oil and gas use. During this timeframe, the road network would experience all weather use with an Average Daily Traffic (ADT) of 2-20 vehicles. This is far in excess of seasonal fair-weather use of primitive roads used for livestock operations and recreational use. Additional traffic, risks of accidents, and indirect effects would be proportionate to the number of employees and activates for each year of the project. If roads are constructed as proposed, stabilized, and well maintained the residual effects associated with road high traffic us should be minimal.

5. CONSULTATION/COORDINATION:

BLM consulted or coordinated with the following on this project:

Contact	Organization	Onsite Presence?
Bud Stewart	Wyoming Game & Fish Dept.	No

List of Preparers (BFO unless otherwise noted)

Position/Organization	Name	Position/Organization	Name
NRS/ Wildlife Biologist Team Lead	Jim Verplancke	Archaeologist	Seth Lambert
Supr NRS - Minerals	Casey Freise	Geologist	Warren Garrett
Petroleum Engineer	Will Robbie	Supr NRS – Tech Services	Kathy Brus
LIE	Kristine Phillips	Supr NRS – Resources	Bill Ostheimer
Soils	Arnie Irwin	Assistant Field Manager	Chris Durham
Assistant Field Manager	Clark Bennett	NEPA Coordinator	John Kelley
Lead Archaeologist	Buck Damone	Acting Supr NRS - Minerals	Ray Stott

6. References and Authorities

Agnew, W. D. 1983. Flora and Fauna Associated with Prairie Dog Ecosystems. Unpublished thesis. Colorado State University, Fort Collins. 47pp.

Agnew, W. D. 1988. Arthropod Consumption by Small Mammals on Prairie Dog Colonies and Adjacent Ungrazed Mixed-grass Prairie in Western South Dakota. Eighth Great Plains Wildlife Damage Control Workshop Proceedings. USDA Forest Service General Technical Report RM 154. pgs. 81-87.

Agnew, W., D. W. Uresk. and R. M. Mansen. 1986. Flora and Fauna Associated with Prairie Dog Colonies and Adjacent Ungrazed Mixed-grass Prairie in Western South Dakota. Journal of Range Management 39, pgs 135-139

AHPIS, Animal and Plant Health Inspection Service. 2002. General information available online at http://www.aphis.usda.gov/lpa/issues/wnv/wnv.html.

Aldridge, C. L., and M. S. Boyce. 2007. Linking occurrence and fitness to persistence: a habitat-based approach for endangered greater sage-grouse. Ecological Applications 17:508-526.

Apa, A. D. 1985. Efficiency of Two Black-tailed Prairie Dog Rodenticides and Their Impacts on Non-target Bird Species. Unpublished thesis, South Dakota State University Brookings. 71pp.

Avian Power Line Interaction Committee (APLIC) 2006. R. Harness, contributing author to: Suggested Practices for Avian Protection on Power Lines: State of the Art in 2006. 207pp.

Balch, J.K, B.A. Bradley C.M D'Antonio, and J. Gomez-Dans. 2013. Introduced Annual Grass Increases Annual Fire Activity Across the Arid West (1980-2009). Global Change Biology. 19-1, pp 173-183.

Bills, Thomas E. 2004. Powder River Basin Oil & Gas Project Semi-Annual Report: May 1, 2003 – October 31, 2003. BLM Buffalo Field Office. Buffalo, WY. 8pp.

Big Horn Environmental Consultants. 2008. Powder Valley Unit – Delta POD Wildlife Survey and Habitat Report. Sheridan, WY. 11pp.

Braun C. E. 1998. Sage-grouse declines in western North America: what are the problems? Proceedings of the Western Association of State Fish and Wildlife Agencies. 67:134–144.

Braun C. E., M. F. Baker, R. L. Eng, J. S. Gashwiler, and M. H. Schroeder. 1976. Conservation committee report on effects of alteration of sagebrush communities on the associated avifauna. Wilson Bulletin. 88:165–171.

Braun, C.E., O.O. Oedekoven, and C.L. Aldridge. 2002. Oil and Gas Development in Western North America: Effects on Sagebrush Steppe Avifauna with Particular Emphasis on Sage Grouse. In: Transactions of the 67th North American Wildlife and Natural Resources Conference. pp337-349.

Bureau of Land Management. 2004. Instruction Memorandum No. WY-2005-057: Statement of Policy Regarding Sage-Grouse Management Definitions, and Use of Protective Stipulations, and Conditions of Approval. Bureau of Land Management, Wyoming State Office. Cheyenne, WY.

Bureau of Land Management. 2008. Fact Sheet Greater Sage-Grouse Buffalo Field Office RMP Amendment. May 28, 2008

Bureau of Land Management. 1990. Instruction Memorandum No. WY-90-564: Resource Management Plan Action and Wyoming BLM Standard Mitigation Guidelines for Surface Disturbing Activities. Bureau of Land Management, Wyoming State Office. Cheyenne, WY.

Campbell, Thomas and Tim Clark. 1981. Colony Characteristics and Vertebrate Associates of White-tailed and Black-tailed Prairie Dogs. American Midland Naturalist, Vol. 105, No. 2 (April 1981). pp. 269-276.

Canfield, J. E., L. J. Lyon, J. M. Hillis, and M. J. Thompson. 1999. Ungulates. Chapter 6 in Effects of Recreation on Rocky Mountain Wildlife: A Review for Montana, coordinated by G. Joslin and H. Youmans. Committee on Effects of Recreation on Wildlife, Montana Chapter of The Wildlife Society.

Clark, L., J. Hall, R. McLEan, M. Dunbar, K. Klenk, R. Bowen, and C. A, Smeraski. 2006. Susceptibility of greater sage-grouse to experimental infection with West Nile virus. Journal of Wildlife Diseases 42:14-22.

Clark, T. W., T. M. Campbell, D. G. Socha, and D. E. Casey. 1982. Prairie Dog Colony attributes and Associated Vertebrate Species. Great Basin Naturalist 42: 572-582.

Code of Federal Regulations (CFR)

1. 40 CFR All Parts and Sections inclusive Protection of Environment. Revised as of July 1, 2004.
2. 43 CFR All Parts and Sections inclusive - Public Lands: Interior. Revised as of October 1, 2006.

Confluence Consulting, Inc. 2004. Powder River Biological Survey and Implications for Coalbed Methane Development. Bozeman, MT. 179pp.

Connelly, J. W., M. A. Schroeder, A. R. Sands, and C. E. Braun. 2000. Guidelines for management of sage grouse populations and habitats. Wildlife Society Bulletin 28:967-985.

Connelly, J. W., S. T. Knick, M. A. Schroeder, and S. J. Stiver. 2004. Conservation Assessment of Greater Sage-grouse and Sagebrush Habitats. Western Association of Fish and Wildlife Agencies. Unpublished Report. Cheyenne, Wyoming.

Cornish, Todd; Terry Creekmore; Walter Cook; and Elizabeth Williams. 2003. "West Nile Virus - Wildlife Mortality in Wyoming 2002-2003". In: The Wildlife Society Wyoming Chapter Program and Abstracts for the Annual Meeting at the Inn in Lander, WY November 18-21, 2003. Wildlife Society Wyoming Chapter. 17pp.

Cornish, Todd. Personal Communication. 2004. Wyoming State Veterinary Laboratory, University of Wyoming. Laramie, WY. (307) 742-6638. tcornish@uwyo.edu.

Dantzker, M. S., Deane, G. B. & Bradbury, J. W. 1999. Directional acoustic radiation in the strut display of male sage grouse Centrocercus urophasianus. Journal of Experimental Biology, 202, 2893–2909.

Danvir, Rick E. 2002. Sage Grouse Ecology and Management in Northern Utah Sagebrush-Steppe: A Deseret Land and Livestock Wildlife Research Report. Deseret Land and Livestock Ranch and the Utah Foundation for Quality Resource Management. Woodruff, UT.

Deisch, M. S., D. W. Uresk, and R. L. Linder. 1989. Effects of Two Prairie Dog Rodenticides on Ground Dwelling Invertebrates in Western South Dakota. Ninth Great Plains Wildlife Damage Control Workshop Proceedings. USDA Forest Service General Technical Report RM. Pgs 171-181.

Dobkin D. S. 1994. *Conservation and management of Neotropical migrant landbirds in the northern Rockies and Great Plains*. University of Idaho Press, Moscow, ID.

Doherty, K.E., D.E. Naugle, B.L. Walker, J.M. Graham. 2008. Greater sage-grouse winter habitat selection and energy development. Journal of Wildlife Management. In press.

Ebert, Jamies I., and Timothy A. Kohler. 1988. The Theoretical Basis of Archaeological Predictive Modeling and a Consideration of Appropriate Data-Collection Methods, in *Quantifying the Present and Predicting the Past: Theory, Method, and Application of Archaeological Predictive Modeling* edited by W. James Judge and Lynne Sebastian, pp 97-171. U.S. Department of the Interior, Bureau of Land Management Service Center, Denver, CO.

Eckerle, William. 2005. Experimental: Archaeological Burial Model for Powder River and Tongue River Hydrological Basins, Wyoming. In *Adaptive Management and Planning Models for Cultural Resource in Oil and Gas Fields in New Mexico and Wyoming*, by Eric Ingbar, Lynne Sebastian, Jeffrey Altschul, Mary Hopkins, William Eckerle, Peggy Robinson, Judson Finley, Stephen A. Hall, William E. Hayden, Chris M. Rohe, Tim Seaman, Sasha Taddie, and Scott Thompson, pp. 39-102. Prepared for the Department of Energy, National Energy Technology Laboratory by Gnomon, Inc. Electronic Document, http://www.gnomon.com/DOEPumpIII/FinalCombinedReport.pdf, accessed August and September 2010.

Fahrig, L., and J. Paloheimo. 1988. Determinations of local population size in patchy habitats. Theorectical Population Biology 34:194-213.

Fertig, W. 2000. *Status Review of the Ute Ladies Tresses (Spiranthes diluvialis) in Wyoming*. Wyoming Natural Diversity Database, Laramie, Wyoming.

Geist, V. 1978. Behavior. Big Game of North America; ecology and management. Stackpole Books, Harrisburg, Pennsylvania.

Gelbard J. L., and J. Belnap. 2003. Roads as conduits for exotic plant invasions in a semiarid landscape. Conservation Biology. 17:420–432.

Gibson, R. M. 1989. Field playback of male display attracts females in lek breeding Sage Grouse. Behavioral Ecology and Sociobiology 24: 439-443.

Gibson, R. M. and J. W. Bradbury. 1986. *Male and female mating strategies on sage grouse leks*. Pp. 379-398 in Ecological aspects of social evolution: birds and mammals (D. I. Rubenstein and R. W. Wrangham, eds.). Princeton Univ. Press, Princeton, New Jersey.

Grenier, M., B. Oakleaf, K. Taylor, and M. Hymas. 2004. *Inventory and Mapping of Black tailed Prairie Dogs in Wyoming – An Estimate of Acreage Completion Report*.

Grenier, M. 2003. An Evaluation of Black-footed Ferret Block Clearances in Wyoming: Completion Report. Wyoming Game and Fish Department. Lander, WY. 16pp

Griscom, H., W. Estes-Zumpf, D. Keinath. 2009. Pre-drilling surveys of amphibian and reptile habitats in the Powder River Basin of Wyoming. Prepared by the Wyoming Natural Diversity Database, Laramie, Wyoming. January 2009.

Haug, E. A. and L. W. Oliphant. 1985. Movements, Activity Patterns, and Habitat Use of Burrowing Owls in Saskatchewan. Journal of Wildlife Management. 54(1):27-35.

Hazlett, D.L. 1996. *The discovery of Spiranthes diluvialis along the Niobrara River in Wyoming and Nebraska*. Report prepared for the Bureau of Land Management Wyoming State Office.

Hazlett, D.L. 1997. *A 1997 search for Spiranthes diluvialis in southeastern Wyoming and western Nebraska*. Report prepared for the Bureau of Land Management Wyoming State Office.

Heidel, Bonnie. Botanist. Wyoming Natural Diversity Database. University of Wyoming. Laramie, WY.

Hiat, G.S. and D. Baker. 1981. Effects of oil/gas drilling on elk and mule deer winter distributions on Crooks Mountain, Wyoming. Wyoming Game and Fish Department.

Holloran, M. J. 2005. Greater sage-grouse (Centrocercus urophasianus) population response to natural gas field development in western Wyoming. Dissertation, University of Wyoming, Laramie.

Holloran, M. J, and S. H. Anderson. 2005. Spatial distribution of Greater Sage-Grouse nests in relatively contiguous sagebrush habitats. Condor 107:742-752.

Holloran, M J.; B. J. Heath; A. G. Lyon; S. J. Slater; J. L. Kuppiers; and S. H. Anderson. 2005. Greater sage-grouse nesting habitat selection and success in Wyoming. J. Wildl. Manage. 69(2):638-649.

Holloran, M. J., R. C. Kaiser, and W. A. Hubert. 2007. Population Response of yearling greater sage-grouse to the infrastructure of natural gas fields in southwestern Wyoming. Completion report. Wyoming Cooperative Fish and Wildlife Research Unit, Laramie, WY, USA. 34pp.

Hoogland, J. 1995. *The black-tailed prairie dog: Social life of a burrowing mammal*. Chicago University Press.

Hubert, W. A. 1993. *The Powder River: a relatively pristine stream on the Great Plains*. Pages 387-395 in L. W. Hesse, C. B. Stalnaker, N. G. Benson, and J. R. Zuboy, editors. Restoration planning for the rivers of the Mississippi River ecosystem. Biological Report 19, National Biological Survey, Washington, D.C.

ICF International. 2012. Iberlin 1-9H and Iberlin 1-9TH Well Habitat Assessment and Biological Surveys. Prepared for: Peak Energy Production Company, L.P.

Ingelfinger, F., and S. Anderson. 2004. Passerine response to roads associated with natural gas extraction in a sagebrush steppe habitat. Western North American Naturalist 64:385-395

Ingelfinger F. 2001. *The effects of natural gas development on sagebrush steppe passerines in Sublette County, Wyoming*. M.Sc. thesis, University of Wyoming, Laramie, WY.

Jalkotzy, M.G., P.I. Ross, and M.D. Nasserden. 1997. The Effects of Linear Developments on Wildlife: A Review of Selected Scientific Literature. Arc Wildlife Services Ltd., Calgary, Alberta, Canada.

Jellison, Bert. 2005. Sage-Grouse Restoration Project: Lake DeSmet Conservation District. Wyoming Game and Fish Department. Sheridan, WY.

Ken Kreckel. 2007. Direction Drilling: The Key to Smart Growth of Oil and Gas Development in the Rocky Mountain Region. The Wilderness Society, http://wilderness.org/files/Directional-Drilling.pdf .

Kelly Brian T. 2004. Letter to interested parties: Black-footed ferret clearance surveys. U.S. Fish and Wildlife Service (February 2, 2004). Cheyenne, WY. 4pp.

King, J. A. 1955. Social Behavior, Social Organization and Population Dynamics in a Black-tailed Prairie Dog Town in the Black Hills of South Dakota. Contr. Lab. Vert. Biol., University of Michigan. 67pp.

Klute, D. S., L.W. Ayers, M.T. Green, W.H. Howe, S.L. Jones, J.A. Shaffer, S.R. Sheffield, and T.S. Zimmerman. 2003. *Status Assessment and Conservation Plan for the Western Burrowing Owl in the United States*. U.S. Department of the Interior; Fish and Wildlife Service, Biological Technical Publication FWS/BTP-R6001-2003, Washington, D.C.

Knick, S. T., and J. T. Rotenberry. 1995. Landscape characteristics of fragmented shrubsteppe habitats and breeding passerine birds. Conservation Biology 9:1059-1071.

Knick S. T., D. S. Dobkin, J. T. Rotenberry, M. A. Schroeder, W. M. Vander Haegen, and C. van Riper III. 2003. Teetering on the edge or too late? Conservation and research issues for avifauna of sagebrush habitats. Condor. 105:611–634.

Knight R. L., and J. Y. Kawashima. 1993. Responses of raven and Red-tailed Hawk populations to linear right-of-ways. Journal of Wildlife Management. 57:266–271.

Knopf F.L. and J.R Rupert. 1995. Habits and habitats of Mountain Plovers in California. Condor 97:743-751.

Landry, R.E. 1979. *Growth and development of the Burrowing Owl*. M.S. thesis, California State University, Long Beach, CA.

Lowham, H.W. Streamflows in Wyoming WRIR 88-4045 U.S. Geological Survey 1988

Lustig, Thomas D., March. 2003. Where Would You Like the Holes Drilled into Your Crucial Winter Range? Transactions of the 67th North American Wildlife and Natural Resources Conference.

Marra PP, Griffing SM, McLean RG. West Nile virus and wildlife health. Emerg Infect Dis [serial online] 2003 Jul. Available from: URL: http://www.cdc.gov/ncidod/vol9no7/03-0277.htm.

McCraken, J. G., D. W. Uresk and R. M. Mansen. 1985. Burrowing Owl Foods in Conata Basin, South Dakota. Great Basin Naturalist 45: 287-290.

McDonald, D., N.M. Korfanta, and S.J. Lantz. 2004. *The Burrowing Owl (Athene cunicularia): a technical conservation assessment*. USDA Forest Service, Rocky Mountain Region.

Meffe, G.K. and C.R. Carroll. 1994. *Principles of Conservation Biology*. Sinauer Associates, Inc. Sunderland, MA.

Miller, B.K., G. Ceballos, and R.P. Reading. 1994. "The Prairie Dog and Biotic Diversity." Conservation Biology 8(3):677-81.

Miller, K.A. 2003. Peak-Flow Characteristics of Wyoming Streams, WRIR 03-4107 U.S. Geological Survey.

Moynahan, B. J. and M. S. Lindberg. 2004. *Nest Locations of Greater Sage-Grouse in Relation to Leks in North-Central Montana*. *Presented at* Montana Sage-Grouse Workshop, Montana Chapter of The Wildlife Society, Billings.

Moynahan, B. J.; M. S. Lindberg; J. J. Rotella; and J. W. Thomas. 2005. Factors Affecting Nest Survival of Greater Sage-Grouse in Northcentral Montana. J. Wildl. Manage.

Moynahan, B. J., M. S. Lindberg, J. J. Rotella, and J. W. Thomas. 2007. Factors affecting nest survival of greater sage-grouse in north-central Montana. Journal of Wildlife Management 71:1773-1783.

Naugle, D. E. K. E. Doherty, B. L. Walker, M. J. Holloran, and H. E. Copeland. 2011. Energy Development and Greater Sage-Grouse. Pp. 489-529 in Greater Sage-Grouse: ecology and conservation of a landscape species and its habitats, S. T. Knick, J. W. Connelly, C. E. Braun (eds.) Studies in Avian Biology, Number 38, University of California Press, Berkley.

Naugle, D. E.; C. L. Aldridge; B. L. Walker; T. E. Cornish; B. J. Moynahan; M. J. Holloran; K. Brown; G. D. Johnson; E. T. Schmidtmann; R. T. Mayer; C. Y. Kato; M. R. Matchett; T. J. Christiansen; W. E. Cook; T. Creekmore; R. D. Falise; E. T. Rinkes; and M. S. Boyce. 2004. West Nile virus: Pending Crisis of Greater Sage-grouse. Ecology Letters. 7:704-713.

Naugle, David E.; Brett L. Walker; and Kevin E. Doherty. 2006. Sage Grouse Population Response to Coal-bed Natural Gas Development in the Powder River Basin: Interim Progress Report on Region-wide Lek Analyses. May 26, 2006. University of Montana. Missoula, MT. 10pp

Nicholoff, S.H., compiler. 2003. Wyoming Bird Conservation Plan, Version 2.0. Wyoming Partners in Flight. Wyoming Game and Fish Department, Lander.

North Dakota Industrial Commission Oil and Gas Research Program. 2011. Investigation of Methodologies to Control Dust on County Roads in Western North Dakota. Grant Applicants: Dunn and Mckenzie County.

Noss, R. F. and A. Cooperrider. 1994. *Saving Nature's Legacy: Protecting and Restoring Biodiversity*. Defenders of Wildlife and Island Press, Washington, D. C.

NRCS Web Soil Survey. n.d. Electronic document, http://websoilsurvey.nrcs.usda.gov/app/WebSoilSurvey.aspx Oakleaf, Bob. January 13, 1988. Letter to BFAT: Preliminary BFF Reintroduction Site Analysis, Meeteetse Management Plan Assignments. Wyoming Game and Fish Department. Lander, WY. 10pp.

Olendorff, R.R. 1993. Status, Biology, and Management of Ferruginous Hawks: A review. Raptor Res. and Tech. Asst. Cen., Spec. Rep. USDI, BLM, Biose, ID.

Olenick, B. E. 1990. *Breeding biology of burrowing owls using artificial nest burrows in southeastern Idaho*. Thesis, Idaho State University, Pocatello, Idaho, USA.

Paige, C., and S. A. Ritter. 1999. *Birds in a sagebrush sea: managing sagebrush habitats for bird communities*. Partners in Western Flight working group, Boise, ID.

Patterson, C. T. and S. H. Anderson. 1985. Distributions of Eagles and a Survey for Habitat Characteristics of Communal Roosts of Bald Eagles (Haliaeetus leucocephalus) Wintering in Northeastern Wyoming. Wyoming Cooperative Fishery and Wildlife Research Unit. University of Wyoming. Laramie, WY.

Pendery, Bruce M. 2010, BLM's Retained Rights: How Requiring Environmental Protection Fulfills Oil and Gas Lease Obligations, 40 Environmental Law, 599-685.

Porneluzi, P, J. C. Bednarz, L. J. Goodrich, N. Zawada, and J. Hoover. 1993. Reproductive performance of territorial Ovenbirds occupying forest fragments and a contiguous forest in Pennsylvania. Conservation Biology 7:618-622.

Primack, R.B. 1993. Essentials of conservation biology. Sinauer Associates, Sunderland, Massachusetts, USA.

Reading, R. P., S. R. Beissinger, J. J. Grensten, and T. W. Clark. 1989. Attributes of Black-tailed Prairie Dog Colonies in North Central Montana with Management Recommendations for the Conservation of Biodiversity. Attributes of Black-tailed Prairie Dog Colonies in North Central Montana with Management Recommendations for the Conservation of Biodiversity. pgs 13-28.

Reading, R., and Randy Matchet. 1997. Attributes of Black-tailed Prairie Dog Colonies in Northcentral Montana. Journal of Wildlife Management 61(3): 664-673.

Robinson, S. K. 1992. *Population dynamics of breeding birds in a fragmented Illinois landscape*. Pages 408-418 in J. Hagan and D. W. Johnston, editors. Ecology and conservation of neotropical migrant land birds. Smithsonian Institution press, Washington, D. C.

Romin, Laura A., and Muck, James A. May 1999. Utah Field Office Guidelines For Raptor Protection From Human And Land Use Disturbances. U.S. Fish and Wildlife Service, Salt Lake City, Utah

Rotenberry J. T., and J. A. Wiens. 1980a. Habitat structure, patchiness, and avian communities in North American steppe vegetation: a multivariate analysis. Ecology. 61:1228–1250.

Rowland, M. M., M. Leu, , S. P. Finn, S. Hanser, L. H. Suring, J. M. Boyd, C. W. Meinke, S. T. Knick, and M. J. Wisdom. 2005. Assessment of threats to sagebrush habitats and associated species of concern in the Wyoming Basins. Version 1.1, June 2005, unpublished report on file at USGS Biological Resources Discipline, Snake River Field Station, 970 Lusk St., Boise, ID 83706.

Rowland, M. M., M. Leu, , S. P. Finn, S. Hanser, L. H. Suring, J. M. Boyd, C. W. Meinke, S. T. Knick, and M. J. Wisdom. 2005. Assessment of threats to sagebrush habitats and associated species of concern in the Wyoming Basins. Version 1.1, June 2005, unpublished report on file at USGS Biological Resources Discipline, Snake River Field Station, 970 Lusk St., Boise, ID 83706.

Ruggiero, L.F., K.B. Aubry, S.W. Buskirk, G.M. Koehler, C.J. Krebs, K.S. McKelvey, and J.R. Squires. 1999. The Scientific Basis for Lynx Conservation: Qualified Insights. Ch16. USDA Forest Service Technical Report RMRS-GTR-30.

Saab, V., and T. Rich. 1997. *Large-scale conservation assessment for neotropical migratory landbirds in the Interior Columbia River Basin*. USDA Forest Service General Technical Report PNW-GTR-399, Portland, Oregon, USA.

Smith D.G., and J.R. Murphy. 1978. Biology of ferruginous hawk in central Utah. Sociobiology 3:79-95.

State wildlife agencies' ad hoc committee for sage-grouse and oil and gas development. 2008. Using the best available science to coordinate conservation actions that benefit greater sage-grouse across states affected by oil and gas development in Management Zones I-II (Colorado, Montana, North Dakota, South Dakota, Utah and Wyoming). Unpublished report. Colorado Division of Wildlife, Denver; Montana Fish, Wildlife and Parks, Helena; North Dakota Game and Fish Department, Bismarck; Utah Division of Wildlife Resources, Salt Lake City; Wyoming Game and Fish Department, Cheyenne.

Steenhof K., M. N. Kochert, and J. A. Roppe. 1993. Nesting by raptors and Common Ravens on electrical transmission line towers. Journal of Wildlife Management. 57:272–281.

Stinson, D. W., D. W. Hays, and M. A. Schroeder. 2004. Washington State Recovery Plan for the Sage-grouse. Washington Department of Fish and Wildlife, Olympia, Washington. 109 pages.

Taylor, R. L., D. E. Naugle, L. S. Mills. 2012. Viability analyses for conservation of sage-grouse populations: Buffalo Field Office, Wyoming. Final Report. February 27, 2012. University of Montana, Missoula, MT.

Temple S. A. 1986. Predicting impacts of habitat fragmentation on forest birds: A comparison of two models. Pages 301-304 in Wildlife 2000 (J. Verner, C. J. Ralph, and M. L. Morrison, Eds.). Univ. Wisconsin Press, Madison.

Temple S.A., and J. R. Cary. 1988. Modeling dynamics of habitat-interior bird populations in fragmented landscapes Conserv. Biol.2 :340-347.

Temple, S.A., and B.A. Wilcox. 1986. Introduction: Predicting effects of habitat patchiness and fragmentation. In *Wildlife 2000: Modeling Habitat Relationships of Terrestrial Vertebrates*, ed. J. Verner, M.L. Morrison, and C.J. Ralph, 261-62. Madison: University of Wisconsin Press.

The National Environmental Policy Act of 1969 (NEPA), as amended (Pub. L. 91-90, 42 U.S.C. 4321 et seq.).

Turner, W. 2007. Survey of herpefauna in the Powder River Basin. Prepared by the Wyoming Game and Fish Department for the US Environmental Protection Agency.

Urban, D. L., and H. H. Shugart, Jr. 1984. Avian demography in mosaic landscapes: modeling paradigm and preliminary results. Pages 273-280 in J. Verner, M. L. Morrison, and C. J. Ralph editors. Wildlife 2000: Modeling habitat relationships of terrestrial vertebrates. University of Wisconsin Press, Madison.

U.S. National Academy of Sciences, 2012. Induced Seismicity Potential in Energy Technologies. Washington, D.C.

U.S. Bureau of Labor Statistics (BLS). 2008. Fatal occupational injuries resulting from transportation incidents and homicides. http://www.bls.gov/iif/oshwc/cfoi/cftb0233.pdf. Website accessed January 5, 2010.

U.S. Bureau of Labor Statistics (BLS). 2009a. Fatal occupational injuries resulting from transportation incidents and homicides. http://www.bls.gov/iif/oshwc/cfoi/cftb0242.pdf. Website accessed January 5, 2010.

U.S. Department of Agriculture, National Resource Conservation Service. 2010. Keys to Soil Taxonomy, 11th Ed.

U.S. Department of the Interior, Bureau of Land Management and Office of the Solicitor (editors). 2001. The Federal Land Policy and Management Act, as amended. Public Law 94-579.

U.S. Department of the Interior 2009, Bureau of Land Management, Instruction Memorandum 2009-078. Processing Oil and Gas Applications for Permit to Drill for Directional Drilling into Federal Mineral Estate from Multiple-Well Pads on Non-Federal Surface and Mineral Estate Locations.

U.S. Department of the Interior 1985, Bureau of Land Management, Buffalo Field Office. Buffalo Resource Management Plan Final Environmental Impact Statement, Record of Decision; see also Approved Resource Management Plan for Public Lands Administered by the Bureau of Land Management Buffalo Field Office 2001; and see: Powder River Oil and Gas Project Environmental Impact Statement and Resource Management Plan Amendment. 2003.

U.S. Department of the Interior 2009, Bureau of Land Management, High Plains District, Update of Task 3A Report for the Powder River Basin Coal Review Cumulative Air Quality Effects for 2020, (AECOM).

U.S. Department of the Interior 2011, Bureau of Land Management, Casper Field Office, Environmental Assessment of Samson Resources Company's Proposed Field Development Program in and adjacent to the Hornbuckle Field, Converse County, Wyoming, WY-060-EA11-181.

U.S. Department of the Interior 2011, Bureau of Land Management. State Director Review, SDR WY-2011-010.

U.S. Department of the Interior 2012, Bureau of Land Management, Buffalo Field Office, Viability Analysis for Conservation of Sage-grouse Populations, R. L. Taylor, D. E. Naugle, and L. S. Mills, Univ. of Montana.

U.S. Department of the Interior 2007, US Fish and Wildlife Service. Reinitiation of Formal Consultation for Powder River Oil and Gas Project. March 23, 2007

U.S. Department of the Interior, Fish and Wildlife Service. 2002. Final Biological and Conference Opinion for the Powder River Oil and Gas Project, Campbell, Converse, Johnson, and Sheridan Counties (WY6633). December 17, 2002. Cheyenne, WY. 58pp.

U.S. Department of the Interior, Fish and Wildlife Service. *Report Mountain Plover (Charadrius Montanus) Biological Evaluation*. March 9, 2007.

U.S. Department of the Interior, Fish and Wildlife Service. 2010. Endangered and Threatened Wildlife and Plants; 12-Month Findings for Petitions to List the Greater Sage-Grouse (*Centrocercus urophasianus*) as Threatened or Endangered. 50 CFR Part 17.

U.S. Department of the Interior, Fish and Wildlife Service. 1989. Black-footed ferret Survey Guidelines for Compliance with the Endangered Species Act. Denver, CO and Albuquerque, NM.

U.S. Department of the Interior, Geological Service. 1996. Occurrences of Erionite in Sedimentary Rocks of the Western United States, R.A. Shepherd, Report 96-018.

U.S. Department of the Interior, Geological Survey. 2007. Organic Compounds in Produced Waters from Coalbed Natural Gas Wells in the Powder River Basin, Wyoming. Applied Geochemistry 22, 2240–2256.

U.S. Department of the Interior, Geological Survey. 2010. Assessment of Potential Effects of Water Produced from Coalbed Methane Natural Gas Development on Macroinvertebrate and Algal Communities in the Powder River and Tongue River, Wyoming and Montana.

U.S. Environmental Protection Agency. 2004. Evaluation of Impacts to Underground Sources of Drinking Water by Hydraulic Fracturing of Coalbed Methane Reservoirs Study, EPA 816-R-04-003, http://water.epa.gov/type/groundwater/uic/upload/completestudy.zip .

Vander Haegen, W. M., F. C. Dobler, and D. J. Pierce. 2000. Shrubsteppe bird response to habitat and landscape variables in eastern Washington, USA. Conservation Biology 14:1145-1160.

Walker, B. L., and D. E. Naugle. 2011.West Nile virus ecology in sagebrush habitats and impacts on greater sage-grouse populations. Pages 127-142 in Greater sage-grouse: ecology and conservation of a landscape species and its habitats, S. T. Knick, J. W. Connelly, C. E. Braun (eds). Studies in Avian Biology, Number 38, University of California Press, Berkley.

Walker, B. L., D. E. Naugle, K. E. Doherty, and T. E. Cornish. 2007. West Nile virus and greater sage-grouse; estimating infection rate in a wild bird population. Avian Diseases 51:691-696.

Walker B, Naugle D, Rinkes T. 2003. The Response of Sage Grouse to Coal-bed Methane Development and West Nile virus in the Powder River Basin: Is There a Link ? Page 6 in: Program and Abstracts for the Annual Wildlife Society Meeting, Wyoming Chapter.

Walker, B.L., D. E. Naugle, and K.E. Doherty. 2007. Greater sage-grouse population response to energy development and habitat loss. Journal of Wildlife Management 71:2644-2654.

WDEQ, June 14, 2004. Compliance Monitoring for Ground Water Protection Beneath Unlined Coalbed Methane Produced Water Impoundments

Windingstad, R. M., F. X. Kartch, R. K. Stroud, and M. R. Smith. 1987. Salt toxicosis in waterfowl in North Dakota. Jour. Wildlife Diseases 23(3):443-446.

Wyoming Game and Fish Department (WGFD). 2004. Minimum Recommendations for Development of Oil and Gas Resources within Crucial and Important Wildlife Habitats on BLM Lands. WGFD. Cheyenne, WY

WGFD. 2003. Wyoming Greater Sage-Grouse Conservation Plan. WGFD. Cheyenne, WY

WGFD. 2004. Sheridan Region Wyoming Game and Fish Department: Annual Sage-Grouse Completion Report for 2004. Wyoming Game and Fish Department. Gillette, WY.

WGFD. 2005. Northeast Wyoming Local Working Group Area: Annual Sage-Grouse Completion Report for 2005. Wyoming Game and Fish Department. Buffalo, WY. 42pp.

WGFD. 2008. Hunting and Sage-Grouse: A Technical Review of Harvest Management On a Species of Concern in Wyoming. Wyoming Game and Fish Department. Green River, WY. 21pp.

WGFD. 2009. Minimum Recommendations for Development of Oil and Gas Resources within Crucial and Important Wildlife Habitats on BLM Lands. WGFD. Cheyenne, WY.

WGFD. 2010. Recommendations for Development of Oil and Gas Resources Within Important Wildlife Habitats, Version 6.0, Revised: April 2010. Wyoming Game and Fish Department. Cheyenne, WY.

WGFD. 2011. Sheridan Region Wyoming Game and Fish Department: Annual Big Game Completion Report for 2011. Wyoming Game and Fish Department. Sheridan, WY.

WGFD. 2011b. 2011 Sheridan Region Lek Monitoring Results.

White, C.M. and T.L. Thurow**.** 1985. ReProduction of Ferruginous Hawks exposed to controlled disturbance. Condor. 87:14-22.

Zou, L., S. N. Miller, and E. T. Schmidtmann. 2006. Mosquito larval habitat mapping using remote sensing and GIS: implications of coalbed methane development and West Nile virus. Journal of Medical Entomology 43:1034-1041.

APPENDIX B. RESOURCE AND SPECIES WORKSHEETS

Table B.1. Affected Resources Worksheet

Resource	Resource Present	Resource Affected	PRB FEIS Sufficient	Notes
Air quality	Yes	Yes	Yes	See PRB EIS 3-291, 3-298, 4-404-4-406, 4-377, 4-386
Cultural	Yes	Yes	No	See PRB EIS 3-206, 3-228, 4-273, 4-287, 4-394;
Native American religious concerns	No	No	No	PBTCP & PRB EIS 3-228, 4-227
Traditional Cultural Properties	No	No	No	PBTCP
Mineral Potential				See PRB EIS 3-66, 3-70, 3-230, 4-127 through 4-129
Coal	Yes	No	Yes	3-66,
Fluid Minerals	Yes	Yes	Yes	3-68, 3-69
Locatable Minerals	Yes	No	Yes	Address in EA
Other leasables	Yes	No	Yes	
Salable minerals	Yes	Yes	Yes	
Paleontology				See PRB EIS 3-65-66, 4-125-127
PFYC 3	No	No	No	
PFYC 5	No	No	No	
Rangeland management				
Existing range improvements	Yes	Yes	Yes	Pasture boundary fences installed, livestock watering systems installed and livestock reservoir constructed.
Proposed range improvements	NA	NA	NA	
Realty	No	No	Yes	None; no federal lands are crossed.
Recreation	Yes	Yes	Yes	See PRB EIS 3-263, 3-273, 4-319 -4-328
Developed site	No	No	No	3-266, 4-326
Walk-in-Area	No	No	No	
Social & Economic	Yes	Yes	Yes	Analyze in EA. See PRB EIS 3-275-3-289, 4-336-4-370
Soils & Vegetation	Yes	Yes	No	Analyze in EA. See PRB EIS 3-80-3-107, 4-134-4-152, 4-153-4-164, 4-343-4-391, 4-406
Erosion Hazard	Yes	Yes	No	Analyze in EA. See PRB EIS 3-82, 4-35
Poor Reclamation	Yes	Yes	No	

Resource	Resource Present	Resource Affected	PRB FEIS Sufficient	Notes
Potential				Analyze in EA.
Slope hazard	No	No	No	
Forest products	No	No	Yes	
Invasive Species	Yes	Yes	No	Analyze in EA. See PRB EIS 3-103-3-108, 4-153
Wetlands/Riparian	Yes	No	No	Analyze in EA. See PRB EIS 3-108-3-111, 4-172-4-178, 4-406, 4-395-4-396
Special Designations				
Proposed ACEC	No	No	No	
Wild & Scenic River	No	No	No	
Wilderness Characteristics/Citizen Proposed	No	No	No	
WSA	No	No	No	
Visual Resources				See PRB EIS 3-252-3-263, 4-302-4-314, 4-403
Class II	No	No	No	
Class III	No	No	No	Class IV bordered by Class III
Water	Yes			
Floodplains	No	No	Yes	See PRB EIS 3-1-3-56, 4-1-4-122, 4-135, 4-393, 4-405; ROD (A32), Vol. 1 (3-108 to 113)
Ground water	Yes	Yes	No	Analyze in EA. See PRB EIS 3-1-3-30, 4-1-4-69, 4-392, 4-405; ROD pg 7&8 (App. D), Vol.1 (3-1 to 36)
Surface water	Yes	Yes	No	Analyze in EA. See PRB EIS 3-36-3-56, 4-69-4-122, 4-393, 4-405; ROD pg 7&8 (App. D) (App. A pg 30 to 310, Vol.1 (3-36 to 56)
Drinking water	Yes	Yes	Yes	ROD pg 7&8 (App. D), Vol. 1 (3-1 to 56)
Wildland Urban Interface	No			
Wildlife	Yes	Yes	No	
ESA listed, proposed, or candidate species	Yes	Yes	Yes	Sage-grouse will be affected by this proposal and will require thorough analysis of effects including cumulative effects
BLM sensitive species	Yes	Yes	No	See attached sensitive species wildlife checklist
General wildlife	Yes	Yes	No	Nesting raptor; Migratory birds; GSG site-specific effects
West Nile virus potential	Yes	No	No	

Presence
K Known, documented observation within project area.
S Habitat suitable and species suspected, to occur within the project area.
NS Habitat suitable but species is not suspected to occur within the project area.
NP Habitat not present and species unlikely to occur within the project area.

Effect Determinations

Listed Species
LAA Likely to adversely affect
NE No Effect.
NLAA May Affect, not likely to adversely affect individuals or habitat.

Candidate Species
J Is likely to jeopardize candidate.
NJ Is not likely to jeopardize candidate species.

Table B.2 Sensitive Species worksheet

Common Name	Habitat	Habitat Present?	Individual Presence	Project Effects	Direct, Indirect, and/or Cumulative Impacts Anticipated Beyond the Level Analyzed within the PRB FEIS?
Amphibians					**4-258**
Northern leopard frog	Beaver ponds and cattail marshes from plains to montane zones.	Yes	S	MIIH	EA treatment required
Columbia spotted frog	Ponds, sloughs, small streams, and cattails in foothills and montane zones. Confined to headwaters of the S Tongue R drainage and tributaries.	No	NP	NI	No
Fish					**4-259 & 4-260**
Yellowstone cutthroat trout	Cold-water rivers, creeks, beaver ponds, and large lakes in the Upper Tongue sub-watershed	No	NP	NI	No
Birds					**4-260 to 4-264**
Baird's sparrow	Shortgrass prairie and basin-prairie shrubland habitats; plowed and stubble fields; grazed pastures; dry lakebeds; and other sparse, bare, dry ground.	Yea	S	MIIH	EA treatment required
Bald eagle	Mature forest cover often within one mile of large water body with reliable prey source nearby.	Yes	NS	MIIH	EA treatment required
Brewer's sparrow	Sagebrush shrubland	Yes	S	MIIH	EA treatment required
Ferruginous hawk	Basin-prairie shrub, grasslands, rock outcrops	Yes	S	MIIH	EA treatment required
Loggerhead shrike	Basin-prairie shrub, mountain-foothill shrub	Yes	NS	MIIH EA treatment required	No
Long-billed curlew	Grasslands, plains, foothills, wet meadows	Yes	S	MIIH	EA treatment required

Common Name	Habitat	Habitat Present?	Individual Presence	Project Effects	Direct, Indirect, and/or Cumulative Impacts Anticipated Beyond the Level Analyzed within the PRB FEIS?
Mountain plover	Short-grass prairie with slopes < 5 percent	Yes	NS	MIIH	4-254, 4-255 & BA; EA treatment required
Northern goshawk	Conifer and deciduous forests	Yes	NS	MIIH	No
Peregrine falcon	Cliffs	Yes	NS	MIIH	No
Sage sparrow	Basin-prairie shrub, mountain-foothill shrub	Yes	NS	MIIH	No
Sage thrasher	Basin-prairie shrub, mountain-foothill shrub	Yes	NS	MIIH	No
Trumpeter swan	Lakes, ponds, livers	No	NP	NI	No
Western Burrowing owl	Grasslands, basin-prairie shrub	Yes	NS	MIIH	4-254, 4-256 & BA; EA treatment required
White-faced ibis	Marshes, wet meadows	No	NP	NI	No
Yellow-billed cuckoo	Open woodlands, streamside willow and alder groves	No	NP	NI	No
Mammals					**4-264 &4-265**
Black-tailed prairie dog	Prairie habitats with deep, firm soils and slopes less than 10 degrees.	Yes	S	MIIH	4-255, 4-256; EA treatment required
Fringed myotis	Conifer forests, woodland chaparral, caves and mines	Yes	NS	MIIH	No
Long-eared myotis	Conifer and deciduous forest, caves and mines	Yes	NS	MIIH	No
Spotted bat	Cliffs over perennial water.	No	NP	NI	No
Swift fox	Grasslands	Yes	NP	NI	No
Townsend’s big-eared bat	Caves and mines.	No	NP	NI	No

Common Name	Habitat	Habitat Present?	Individual Presence	Project Effects	Direct, Indirect, and/or Cumulative Impacts Anticipated Beyond the Level Analyzed within the PRB FEIS?
Plants					**4-258**
Limber pine	Mountains, associated with high elevation conifer species	No	NP	NI	No
Porter's sagebrush	Sparsely vegetated badlands of ashy or tufaceous mudstone and clay slopes 5,300-6,500 ft.	No	NP	NI	No
William's wafer parsnip	Open ridgetops and upper slopes with exposed limestone outcrops or rockslides, 6,000-8,300 ft.	No	NP	NI	No

Presence
K Known, documented observation within project area.
S Habitat suitable and species suspected, to occur within the project area.
NS Habitat suitable but species is not suspected to occur within the project area.
NP Habitat not present and species unlikely to occur within the project area.

Sensitive Species - Effect Determinations
NI - No Impact.
MIIH - May Impact Individuals or Habitat, but will not likely contribute to a trend towards Federal listing or a loss of viability to the population or species.
WIPV - Will Impact Individuals or Habitat with a consequence that the action may contribute to a trend towards Federal listing or cause a loss of viability to the population or species.
BI - Beneficial Impact
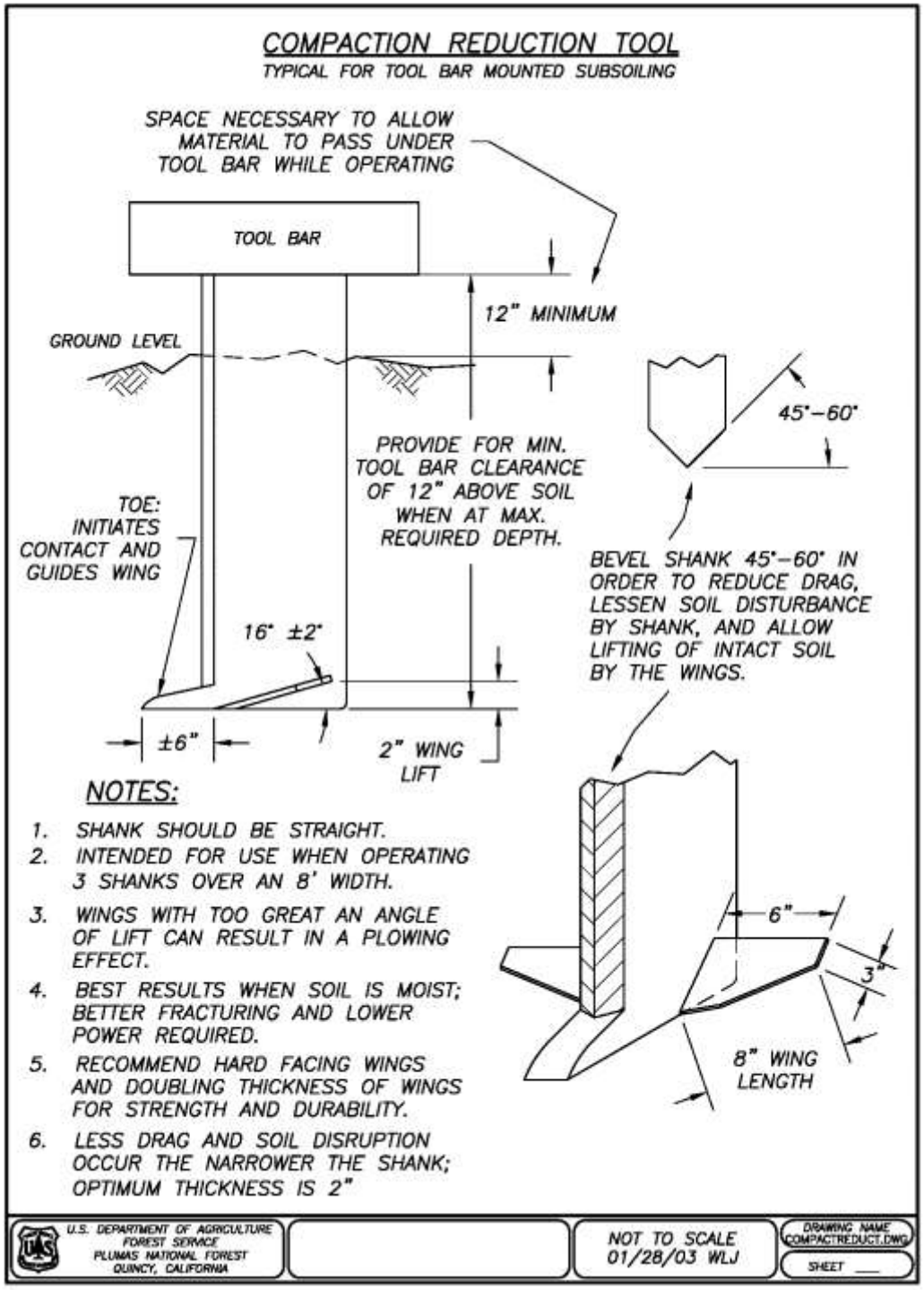
APPENDIX C. DIAGRAM OF COMPACTION REDUCTION TOOL