Appendix V

Site Specific Plans for Areas with High Susceptibility to Landslides

REPORT

SUPPLEMENTARY EVALUATION OF HIGH-SUSCEPTIBILITY LANDSLIDE CONDITIONS FOR THE BISON PIPELINE

GILLETTE, WYOMING TO GLEN ULLIN, NORTH DAKOTA

Submitted to: AMEC Paragon, Inc.
10777 Clay Road
Houston, Texas 77041 USA

Submitted by: Golder Associates Inc.
44 Union Blvd.
Suite 300
Lakewood, CO 80228 USA

April 2, 2010 **Project No. 093-81716**

A world of capabilities delivered locally

Golder Associates

Table of Contents

1.0 INTRODUCTION 1
1.1 Scope of Study 1
1.2 Project History Pertinent to this Study 1
1.3 Activities and Limitations of the Current Study 2
2.0 GENERAL DESCRIPTIONS OF LANDSLIDE FEATURES IN THE PROJECT AREA 4
2.1 Small-Scale Slumps Along Stream Channel Banks 5
2.2 Large Scale Slumps 5
2.3 Earth Flows 6
3.0 DESCRIPTION OF HIGHLY-SUSCEPTIBLE LANDSLIDE LOCATIONS AND SITE-SPECIFIC MITIGATION PLANS 7
3.1 Location 1: Milepost 19.7 – 19.9 (Hazard ID Number: 3-QlsP(e)) 7
3.1.1 Initial Identification from 2009 Study 7
3.1.2 Site Geology 7
3.1.3 Findings of the 2010 Ground Reconnaissance 7
3.1.4 Summary of High-Susceptibility Landslide Conditions at Location 1 8
3.1.5 Mitigation Plan for Location 1 8
3.2 Location 2: Milepost 27.5 (Hazard ID Number 14-QlsA(s)) 9
3.2.1 Initial Identification from 2009 Study 9
3.2.2 Site Geology 9
3.2.3 Findings of the 2010 Ground Reconnaissance 10
3.2.4 Summary of High-Susceptibility Landslide Conditions at Location 2 11
3.2.5 Mitigation Plans for Location 2 11
3.3 Location 3a and 3b: Milepost 96.1 – 96.4 (Hazard ID Number 31-QlsA(s)) 13
3.3.1 Initial Identification from 2009 Study 13
3.3.2 Site Geology 13
3.3.3 Findings of the 2010 Ground Reconnaissance 14
3.3.4 Summary of High-Susceptibility Landslide Conditions at Location 3a and 3b 14
3.3.5 Mitigation Plan for Location 3 15
3.4 Location 4: Milepost 98.1 (Hazard ID Number 32-QlsA(s)) 16
3.4.1 Initial Identification from 2009 Study 16
3.4.2 Site Geology 16
3.4.3 Findings of the 2010 Ground Reconnaissance 16
3.4.4 Summary of High-Susceptibility Landslide Conditions at Location 4 16
3.5 Location 5: Milepost 131.6 (Hazard ID Number 37-QlsA(s)) 16
3.5.1 Initial Identification from 2009 Study 16
3.5.2 Site Geology 17
3.5.3 Findings of the 2010 Ground Reconnaissance 17
3.5.4 Summary of High-Susceptibility Landslide Conditions at Location 5 17

3.5.5 Mitigation Plan for Location 5 17
3.6 Location 6: Milepost 144.3 (Hazard ID Number 38-QlsA(s)) 17
3.6.1 Initial Identification from 2009 Study 17
3.6.2 Site Geology 18
3.6.3 Findings of the 2010 Ground Reconnaissance 18
3.6.4 Summary of High-Susceptibility Landslide Conditions at Location 6 18
3.7 Location 7: Milepost 170.7 (Hazard ID Number 39-QlsP(s) 18
3.7.1 Initial Identification from 2009 Study 18
3.7.2 Site Geology 18
3.7.3 Findings of the 2010 Ground Reconnaissance 18
3.7.4 Summary of High-Susceptibility Landslide Conditions at Location 7 19
3.7.5 Mitigation Plan for Location 7 19
3.8 Location 8: Milepost 187.5 to 187.6 (Hazard ID Number 43-QlsA(s)) 19
3.8.1 Initial Identification from 2009 Study 19
3.8.2 Site Geology 19
3.8.3 Findings of the 2010 Ground Reconnaissance 19
3.8.4 Summary of High-Susceptibility Landslide Conditions at Location 8 20
3.9 Location 9: Milepost 277.7 (Hazard ID Number 62-QlsA(s)) 20
3.9.1 Initial Identification from 2009 Study 20
3.9.2 Site Geology 20
3.9.3 Findings of the 2010 Ground Reconnaissance 20
3.9.4 Summary of High-Susceptibility Landslide Conditions at Location 9 20
3.10 Location 10: Milepost 282.2 (Hazard ID Number 66-QlsA(e)) 21
3.10.1 Initial Identification from 2009 Study 21
3.10.2 Site Geology 21
3.10.3 Findings of the 2010 Ground Reconnaissance 21
3.10.4 Summary of High-Susceptibility Landslide Conditions at Location 10 22
3.10.5 Mitigation Plans for Location 10 22
3.11 Location 11: MP 32.7 to 33.4 (Hazard ID Number 21-QlsD(s)) 23
3.11.1 Initial Identification from 2009 Study 23
3.11.2 Site Geology 23
3.11.3 Findings of the 2010 Ground Reconnaissance 23
3.11.4 Summary of High-Susceptibility Landslide Conditions at Location 11 24
3.11.5 Mitigation Plans for Location 11a-c 25
4.0 LIMITATIONS 26
5.0 REFERENCES 27

List of Tables

Table 1 Geologic Hazards Identified Along Proposed Pipeline Route and Recommended Actions

List of Figures

Figure 1-0 Vicinity Map
Figure 1-1 Location 1 – MP 19.7 to 19.9
Figure 2-1 Location 2 – MP 27.5 to 27.6
Figure 2-2 Location 2 – MP 27.5 to 27.6
Figure 3-1 Location 3 – MP 96.0 to 96.6
Figure 5-1 Location 5 – MP 131.6
Figure 7-1 Location 7 – MP 170.7
Figure 10-1 Location 10 – MP 282.1 to 282.2
Figure 11-1 Location 11 – MP 32.7 to 33.0

List of Appendices

Appendix A Site photographs
Appendix B TransCanada Typical Mitigation Details
Appendix C TransCanada General Mitigation Guidelines

1.0 INTRODUCTION

TransCanada Pipelines is proposing to construct a natural gas pipeline from Gillette, Wyoming to Glen Ullin, North Dakota, where it will tie into the Northern Border Pipeline System in Morton County, ND. This pipeline is referred to as the Bison Pipeline Project. The proposed 30-inch diameter pipeline will traverse portions of Wyoming, Montana and North Dakota in a roughly northeast direction and cross a variety of terrain over its approximately 302-mile long alignment. The current study was conducted to provide supplemental information for high-susceptibility landslide conditions along the proposed pipeline alignment and provide mitigation recommendations as needed. This study was conducted in accordance with AMEC/Paragon Work Order Number C-2007-085-RFS-18, authorized by Mr. Robert D. Sease on January 26, 2010.

1.1 Scope of Study

The purpose of the study was to conduct a more detailed evaluation of potential high susceptibility landslides along the proposed alignment and to provide preliminary mitigation recommendations for these potential landslide hazards. The alignment used in this evaluation is revision LV17, provided to us by AMEC/Paragon. The work conducted for this study included:

- Site specific aerial and ground-based reconnaissance for the ten locations of high-susceptibility landslide conditions identified in our letter report entitled *Identification and Recommended Mitigation for Locations that are Highly Susceptible to Landslides Along the Proposed Pipeline Right-of-Way, Proposed Bison Pipeline Project, Wyoming to North Dakota*, dated October 8, 2009.
- Review of aerial photography in stereo pairs for portions of the alignment between approximate Mileposts (MP) 95.7 – 96.7, MP 187 – 188, and MP 281.5 – 282.5.
- Revising, as appropriate, the list of locations of high-susceptibility landslide conditions based on the results of the ground reconnaissance.
- Providing site-specific mitigation recommendations for each of those areas identified in the current study as locations of high-susceptibility landslide conditions.

1.2 Project History Pertinent to this Study

The current study is supplemental to work completed between September and December 2009 by Golder Associates, as presented in:

- *Identification and Recommended Mitigation for Locations that are Highly Susceptible to Landslides Along the Proposed Pipeline Right-of-Way, Proposed Bison Pipeline Project, Wyoming to North Dakota,* dated October 8, 2009.

The October letter report (Golder 2009) provided a summary table specific to the identification of high-susceptibility landslide locations.

Prior to the 2009 studies, the Environmental Impact Statement (DEIS) presented identification of Landslide Incidence and Susceptibility in Table 3.1.1-5 of that document, dated August 21, 2009. This

table identified starting and ending milepost intervals for landslide susceptibility rankings based on U. S. Geological Survey (USGS) "landslide incidence" criteria. This criteria is based on the 1:7,500,000 scale Landslide Overview Map of the Conterminous United States (Radbruch-Hall, et. al., 1982). This map is based on landslide-susceptible geologic units within the entire United States and does not delineate the stable and unstable ground that may be present within each of the broadly-mapped hazard areas. As such, the USGS Landslide Overview Map of the Conterminous United States was not intended for site specific landslide hazard evaluations.

During Golder's previous studies, no ground-based reconnaissance for geologic hazards was conducted because access to much of the proposed pipeline Right-of-Way (ROW) was not permitted at that time, and helicopter landing was not permitted anywhere along the proposed alignment. Thus, the observations of geologic hazards and high-susceptibility landslide conditions presented in the 2009 studies were based on aerial reconnaissance and published geologic mapping. Revision LV11 of the proposed pipeline Bison alignment was used for these studies.

At the time of the 2009 aerial reconnaissance, the most recent alignment location was not plotted for a portion of the alignment between about MP 17 to MP 34. Since the location of the alignment could not be discerned on the alignment plan sheets for some portions of this area during the flight, Golder requested and obtained aerial photography for viewing as stereo pairs for this segment of the alignment. Thus, some of the geologic hazards identified between MP 17 and MP 34 of the proposed alignment were based solely upon our review of stereo-pair air photos. Stereo pairs for the entire 302-mile alignment were not reviewed due to time and budgetary constraints.

Based on the aerial reconnaissance, stereoscopic aerial photographs, and published geologic mapping, preliminary recommendations for mitigation at each of the 10 locations identified as high-susceptibility landslide locations were provided, along with the recommendation that each location be inspected on the ground and mitigation strategies revised as appropriate.

The current February 2010 study was undertaken to follow up the 2009 aerial reconnaissance with on-the-ground data gathering and updating of the previous findings, and to provide more detailed mitigation recommendations.

1.3 Activities and Limitations of the Current Study

Due to the pipeline project schedule constraints, the on-the-ground reconnaissance was conducted in early February 2010 in winter conditions. A Bell Long Ranger helicopter was used to access each of the 10 identified locations of high-susceptibility landslide conditions, during the period of February 2 through 4, 2010. At the time of the ground reconnaissance, there was considerable snow cover at most of the locations. While the geomorphic character of the ground features was apparent at most locations, smaller-scale features that might indicate recent slope movement, such as possible ground cracking on

the order of 2-4 feet or less and small-scale seepage features, would have been snow covered and not observed. At most of the locations, we were able to make sufficient observations to provide site-specific mitigation recommendations. However, at several locations, it is appropriate to conduct on-the-ground field checks following the spring snowmelt to verify conditions prior to beginning pipeline construction.

Stereoscopic aerial photographs were reviewed for Location numbers 1 and 2 during the 2009 studies, as part of the MP 17 to MP 34 photo review. Due to the presence of snow cover in areas of concern during the current study, Golder requested and obtained aerial photography for Location numbers 3, 8, and 10. Location numbers 1, 2, 8, and 10 were identified in Table 1 of the October 8, 2009 letter report (Golder 2009) as being larger features which may require mitigation measures beyond standard grading during ROW construction, and the stereoscopic aerial photos were used to further evaluate these features in light of the snow cover conditions at the time of the study. Stereoscopic aerial photos were also reviewed to further evaluate a possible larger feature at Location number 3 at about MP 96.1 to 96.6.

During the February 2010 helicopter flights, we flew over an area previously identified as containing dormant landslide features. Landing at this area was not permitted due to landowner access restrictions. However, the additional aerial observation of this area resulted in the identification of landslide features which appear to be Active and Potentially Active. This area, identified as Location 11 in this report, lies between about MP 32.8 and 33.0 of alignment revision LV17, and is discussed in Section 2.12.

Following data gathering in the field, the project team prepared this report to document findings of the on-the-ground field reconnaissance, review of additional stereoscopic aerial photos, and to present site-specific mitigation plans for each of the ten locations.

Table 1 presents updated information for each of these ten High-Susceptibility locations identified in the 2009. Based on the 2010 site reviews, several of the ten locations identified in 2009 are no longer considered to be High-Susceptibility locations. Table 1 also includes recommendations for the three Location 11 landslides in the vicinity of MP 32.8 to 33.0. Locations are listed in Table 1 by milepost, but the 2009 Location Number from the landslide letter report (Golder 2009) are also given for each location.

2.0 GENERAL DESCRIPTIONS OF LANDSLIDE FEATURES IN THE PROJECT AREA

Landslides are the down slope movement of soil and rock under the force of gravity. In most cases, slope failure is encouraged or exacerbated by the presence of groundwater in the soil/rock mass. Landslides were classified in three general categories for this study, and earlier studies for the proposed Bison Pipeline. Debris flows are fast-moving landslides, and generally have relatively high water content. Earth flows are slower moving than debris flows, but still exhibit a flow-like movement. Rotational failures, slumps, and planar landslides may be slow moving to rapid moving. All three of these landslide types have the potential to damage or break a buried pipeline, if the base of the failure lies within or below the pipe elevation. Where a pipeline is over-ridden by shallow-seated landslides, the pipe may not be damaged if the influence of ground movements remains above the level of the pipe. Only slump and earth flow type landslides represent the high landslide susceptibility areas covered in this report. Slump and earth flow type landslides are described in more detail below.

Landslides observed during geologic review of the proposed pipeline alignment (Golder 2009) are characterized as Active, Potentially Active, and Dormant. Each of these activity categories is described below.

Active landslides have features which indicate slope movement within the past 50 years. These features may include: clearly identifiable change in slope morphology such as fresh scarps (with exposed soil) or concave slopes in the source area, down-dropped blocks, back-rotated blocks, or, hummocky topography in the body of the slide, and lobate landforms at toe of slide. Fresh bedrock/soil is exposed in main scarp or minor scarps and tension cracks are fresh. Active landslides exhibit a change in drainage patterns including ponded water (sag ponds) in closed depressions or the landslide may extend into stream channels, possibly causing damming of the stream. Both older and younger trees show signs of displacement (leaning).

Potentially Active landslides lack sharp, fresh geomorphic features, but still exhibit geomorphology suggestive of movement within the past 50 to 1000 years. Potentially Active landslides may lack distinctive indicators of movement such as landslide morphology and disturbed vegetation because the potential ground movement may be slow enough that erosion and weathering obscure or alter the landslide morphology and the vegetation is able to adjust. Estimating the rate of ground movement, if any, may only be achieved through long-term monitoring of the feature.

Dormant landslide features exhibit landslide morphology suggestive of movements greater than 1,000 years ago. Weathering and erosion have partially modified the original landslide structure. Scarps and slope breaks have been rounded by erosion and are obscured by vegetation. Tension cracks have been filled in with sediment. A drainage network has begun to develop on slide surface and slopes adjacent to landslide. The toe of the landslide may have been partially removed by river/stream erosion as

river/stream attempts to re-establish its pre-slide course. Sag ponds have either completely drained or have been filled with sediment. Within the Bison Pipeline project area, the dormant features are most often characterized by significant modification of landslide geomorphology by long-term surface erosion and incised terrain.

Since ground reconnaissance was not completed for the 2009 landslide evaluations, the estimated landslide type (slump, earth flow) and landslide activity (Active, Potentially Active, or Dormant) for each of the ten identified locations was based on the observations and data available, and additional site-specific ground-based evaluations were recommended in the 2009 letter report. The more detailed observations completed for 2010 evaluation have resulted in several of the features previously identified in 2009 as high-susceptibility landslide locations now being recognized as areas that have experienced surface soil erosion or localized small-scale stream bank slumping, and as such are no longer considered a potential landslide hazard. The sections below describe each of the 11 landslide locations. The updated list of Locations of High-Susceptibility Landslide Conditions along with preliminary mitigation recommendations is presented in Table 1.

2.1 Small-Scale Slumps Along Stream Channel Banks

Small-scale, slump-type slope failures were observed along stream channel banks at Location 3 (MP 96.6) and Location 5 (MP131.6) where stream erosion has undercut the channel bank, and may also have occurred in response to soil piping erosion. These features are generally shallow enough (less than 7 deep) that they will be graded out during right-of-way construction where they occur within proximity of the proposed alignment. These features are considered Active landslides. However, because the extent of potential slope failure does not typically extend below the proposed pipe depth (7 feet) they are not classified in this report as High-Susceptibility Landslides, and are not considered to be a hazard to the proposed buried pipeline once it has been constructed.

2.2 Large Scale Slumps

Slumps are landslides that typically have curved failure surfaces and initially involve rotational movement of a relatively intact soil or rock mass (Selby, 1993). Slumps may start as single rotational failures with shearing occurring on a defined curved surface (Selby, 1993). Additional slump-type landslides may form and retrogress in the over-steepened head scarp of the original slump, and as such, the slope instability may migrate significant distances upslope from the original slump location. Additional slump-type landslides may also form in the over-steepened toe area of the original slump and the toe of the slump may be remolded to become an earth flow (Selby, 1993). Back rotation of the sliding mass often creates jumbled terrain with topographic depressions sometimes accompanied by ponded water (sag ponds). Such water, if introduced to the slide mass, may promote continuing movement of the landslide (Selby, 1993). Slumps may be identified by the presence of chaotically tilted trees, and have distinctive morphology such as intact landslide blocks separated by steep scarps, closed depressions or sag ponds. Slumps can occur rapidly or can develop slowly and continue to move over long periods of time. The

common term used to describe the disturbed surface of a slump is “hummocky” or “benched.” Slumps can be several tens to several hundreds of feet wide and long, and may be several tens of feet deep or more. Slump type landslides may pose a significant hazard to pipeline facilities because slumps typically occur of steeper slopes and, as such, movement of the slump may be sudden and rapid. Slumps are typically characterized by a well-defined head scarp, intact back-rotated blocks, and a bulging toe. Large slumps that move a significant distance down the slope may become earth flows as the slump blocks break up and the landslide mass becomes remolded. Large-scale slumps were observed on, or adjacent to, the proposed pipeline route at Site 2 (MP 27.5-27.6) and Site 11 (MP 32.8-33.0).

2.3 Earth Flows

Earth flows are mass movements of typically fine-grained soils (Baum et al., 2003) over a discrete basal shear surface within well defined lateral boundaries (Jackson, 1997). The basal shear surface is more or less parallel with the ground surface, and the earth flow terminates in lobe-like forms (Jackson, 1997). The term earth flow, as used in this report, refers to slow moving features (when active), likely on the order of a few inches to a few feet per year. Earth flows may form as a result of composite failure mechanisms, and as such, may have slump-type failure modes occurring in the head area of the earth flow.

Extremely large earth flows can measure on the order of several miles wide by several miles long. The surface of the earth flow may have hummocky morphology and may have distinctive, linear drainages and finger ridges, representing shear zones and pressure ridges on the lateral sides of the earth flows, as well as in the interior of the earth flow. The larger earth flows may have sag ponds and beheaded creek channels located on the earth flow surface. Because of the slow movement of some earth flows, the trees, where present on the surface, may be growing relatively straight with little evidence of disturbance. Identifying earth flows, and estimating their activity levels, is often difficult because of their often subdued morphology and lack of obvious movement indicators, such as fresh scarps.

Landslides with components of both slumps and earth flows are typically referred to as “composite” landslides, but in this report are referred to as slump/earth flows (s/ef). Slump/earth flows may exhibit lobate morphology at the toe of the slide. A large earth flow is crossed by the proposed pipeline route at Site 3 (MP 96.1-96.4).

3.0 DESCRIPTION OF HIGHLY-SUSCEPTIBLE LANDSLIDE LOCATIONS AND SITE-SPECIFIC MITIGATION PLANS

3.1 Location 1: Milepost 19.7 – 19.9 (Hazard ID Number: 3-QlsP(e))

3.1.1 Initial Identification from 2009 Study

The feature at MP 19.7 to 19.9 was identified in the 2009 aerial reconnaissance study as a possible Potentially Active Earth Flow, as shown on Photo 1-1 (Appendix A). At this location, the pipeline alignment drops down the approximate fall line of the slope through a geomorphic feature with the similar shape to that of an earth flow, including an eroded source area and a lobate-shape area at the base of the slope.

A secondary geologic hazard concern at this location is an approximately 50-foot-high, near-vertical, natural cut in very weak sandstone that has been formed by stream erosion at the outside bend of a stream channel that is located within the propose pipeline ROW. Although not a landslide feature, further erosion at stream cut could lead to slope instability in the vicinity of the proposed pipeline ROW. Photo 1-1 shows the Location 1 potential geologic hazard features identified in the 2009 study.

3.1.2 Site Geology

Bedrock of the Wasatch Formation is exposed in the steep channel cut at Location 1. The Wasatch Formation, of Tertiary age, includes layers of yellowish-gray to light brown, fine-grained sandstone, light gray siltstone and shale, brown carbonaceous shale, and coal. The Wasatch Formation is often observed to be susceptible to landslide formation within the weaker layers of this formation.

3.1.3 Findings of the 2010 Ground Reconnaissance

The features at Location 1 were examined by on-the-ground reconnaissance on February 4, 2010, as shown on Figure 1-1. Intact layers of sandstone were observed in erosion gullies within the limits previously defined for the suspected earth flow feature. Photo 1-2 shows an example of intact sandstone bedding, exposed in the largest of the erosion gullies. The presence of intact bedrock in the gullies at various elevations on the slope preclude the presence of an earth flow. Instead, these features indicate that the slope is experiencing active, deep erosion that should be considered during pipeline construction and slope restoration. Photo 1-3 shows the primary flow paths on the slope which are eroding deep gullies.

Figure 1-1 presents a sketch of the slope along the proposed pipe centerline. Slope angles range from about 10 to 15 degrees the upper and mid portions of the slope and steepen to near vertical at the toe of the slope where it intersects with Mooney Draw.

The near-vertical channel cut located on the west side of the proposed ROW was estimated to be approximately 50 feet in height. The proposed centerline of the pipe was estimated to be about 30 feet

east of the steep channel cut, at its closest point (Photo 1-4). The rock exposed in the 50-foot-high channel cut is yellow-gray sandstone of the Wasatch Formation, and is very weakly cemented, friable, and rock crumbles easily when disturbed (Photo 1-5). The sandstone stands at a near-vertical angle at the channel cut at Moody Draw as well as smaller draws along the east side of Location 1.

3.1.4 Summary of High-Susceptibility Landslide Conditions at Location 1

The intact materials found along the slope at Location 1 show that this feature is not the result of landsliding, but is an intact slope experiencing erosion. The lobate morphology at the toe of the slope may be overlain by layers of slopewash deposits as alluvium/colluvium, but is likely underlain by bedrock and as a result is not considered to be a hazard to the proposed pipeline in terms of landsliding.

Although the slope has been identified as stable based on the ground reconnaissance, the near-vertical stream channel cut within the boundary of the ROW is considered a potential future stability hazard for the pipeline (Photo 1-1). Future lateral erosion by the stream channel in the Moody Draw has the potential to undercut the bedrock that will support the pipeline. Lateral erosion at this location could occur in response to episodic high runoff events which produce significant flows in the Moody Draw. The existing channel cut is estimated to have developed over a time frame of thousands of years. Although it is not considered likely that this undisturbed slope will experience a stability failure independent of channel erosion, such an event could be triggered by significant slope disturbance associated with pipeline construction. Therefore we recommend mitigation measures as described below in Section 2.2.5.

Finally, the slope from about MP 19.82 to 19.89 is experiencing active, deep, gully erosion. Although not a concern for landslide movement, mitigation measures to curb slope erosion following pipeline construction is recommended, as described in the section below.

3.1.5 Mitigation Plan for Location 1

Although Location 1 is no longer considered to be a location of High-Susceptibility Landslide Conditions, mitigation measures to curb slope erosion, and to monitor possible future enlargement of the natural stream channel cut are recommended, as follows:

- The pipe should be placed as far as possible to the east side of the ROW, to maximize its distance from the steep channel cut.
- Site specific hydrotechnical engineering investigation and analysis may be required to characterize site conditions and develop corresponding designs to capture and convey surface run-off along the ROW and for trench drainage flows. Refer to Appendix C for TransCanada guidelines.
- Trench breakers (trench plug) should be used in construction of the pipeline down the slope from MP 19.82 to 19.90, using typical details located in Appendix B. These trench breakers include provision for drainage of water which may be captured behind the trench breaker, so that water is not allowed to collect in the slope.

- The slope from MP 19.82 to 19.90 should be restored/reclaimed using water bars and crowning of the slope above the pipe to direct surface runoff to the west, away from the pipeline ROW and away from the lip of the steep channel cut. Typical details located in Appendix B should be used.
- Annual visual monitoring of the slope should be done, to check for enlargement of the steep channel cut toward the pipeline, and for erosion damage along the ROW.

3.2 Location 2: Milepost 27.5 (Hazard ID Number 14-QlsA(s))

3.2.1 Initial Identification from 2009 Study

The feature at MP 27.5 was identified in the 2009 aerial reconnaissance study as a possible Active Slump. At this location, the proposed LV17 pipeline alignment descends a side hill, oblique to the approximate direction of movement of the landslide, as shown on Figure 2-1.

3.2.2 Site Geology

The slopes at Location 2 are characterized by bedrock of the Wasatch Formation, of Tertiary age. The Wasatch Formation includes layers of yellowish-gray to light brown, fine-grained sandstone, light gray siltstone and shale, brown carbonaceous shale, and coal. The Wasatch Formation is often observed to be susceptible to landslide formation where slope stability is dominated by the weaker layers. Flatter ridges and slopes adjacent to and nearby Location 2 have residual soils of the Wasatch Formation. The residual soils are materials which have weathered in place to form soils from the parent bedrock.

Thinly-bedded siltstone and shale, with occasional thin, more resistant sandstone layers, characterizes the geologic materials in the immediate vicinity of Location 2 (Photo 2-3). Carbonaceous shale was also observed in the exposures near the drainage bottom. Sandstone caps the ridge tops, and is occasionally found on the lower slopes in layers ranging from a few inches to about 2-3 feet thick.

Mapping published by the US Geological Survey (USGS) shows numerous landslides within the area including and surrounding Location 2. Most of these features are about the size of the feature documented at Location 2. These features are described by USGS as blocks or masses of bedrock and surficial materials which have moved downslope through slumping and/or earth flow. They occur primarily on steep lower hillslopes adjacent to valley bottoms. USGS describes that “some are stabilized but many continue to move”. These descriptions fit with our observations in the field of landslide features occurring in the area between about MP 17 and MP 34. Many of the features of this type that we observed from the air are at a considerable distance from the ROW. Landslides observed within or in proximity to the ROW are noted in the 2009 letter report of geologic conditions (Golder 2009), however the landslide mapping in the vicinity of the 11 locations studied in this report supersede the landslide mapping of the 2009 report.

3.2.3 Findings of the 2010 Ground Reconnaissance

Location 2 was examined by on-the-ground reconnaissance in February 2010. Based on this site visit the feature was classified a landslide complex as it has at least three slump-type landslides that are adjacent to one another. Figure 2-1 and Photos 2-1 and 2-2 (Appendix A) present a graphical representation of landslide complex, showing the configuration of landslide blocks, scarps, and other mapped features.

The landslide complex includes possibly three slump-type landslides that are adjacent to one another. The landslide complex is approximately 220 feet long, 630 feet wide (parallel to the drainage), and is estimated to be in the range of 10 to 40 feet deep. However, it is likely that the depth of the slide plane varies and is likely deeper at the north end of the landslide where the vertical block offsets are larger. The south and middle slumps within the landslide complex exhibit a more subdued morphology and exhibit less of the blocky, slump character. Depth of sliding is estimated to be on the order of 10 to 20 feet at the middle and south slumps. The proposed LV17 route crosses obliquely down the slope and crosses through the middle slump and then crosses the toe of the north slump. The middle slump area is smaller than the north slump area and is characterized by a concave slope and a convex toe. The largest and most distinct of the slumps is located on the north side of the landslide complex. The north slump area includes two distinct intact landslide slump blocks, designated as the lower and upper slump blocks. These intact slump blocks have greater relief in the north portion of the north slump. The displaced slump blocks create a benched topography within the slide mass. The slump blocks are about 70 to 80 feet wide, and range from about 15 to 25 feet high where the landslide is crossed by the proposed pipe centerline but their height increases to about 30 feet or more at the north end of the landslide (Photo 2-2). The proposed LV17 Route does not cross the upper slump block, and crosses the lower slump block at an oblique angle. Figure 2-3 shows a crude topographic profile of the proposed LV17 route as it descends obliquely across the landslide complex.

Based on the subdued and rounded nature of the slump blocks within the landslide complex it is likely that initial movement of the complex occurred over 1,000 years ago, possibly in response to downcutting of the stream channel along its toe. Small-scale indicators of recent or ongoing slope movement, if any, within the slide mass were obscured by snow during our site February 2010 site reconnaissance.

An unnamed, ephemeral stream flows through an incised channel at the base of the landslide complex. The channel bottom was mostly snow-covered at the time of the 2010 field visit, however, an approximately 4- to 6-foot-high step (nick point) was observed in the stream channel at the toe of the slump approximately 200 feet upstream from the north end of the landslide. The nick point is approximately 40 feet downstream of the proposed pipe centerline where it crosses the drainage.

Although the ground was mostly snow-covered at the time of our ground reconnaissance, a linear, shallow trough feature was observed near the north end of the lower landslide block. This feature could be related to relatively recent (within the past 50 years) ground cracking, or extensional movement in the

lower north portion of the landslide in response to stream downcutting. This portion of the landslide toe is also steeper (greater than 45 degrees) than the toe observed upstream. Although this landslide complex is likely more than 1,000 years old, it is unclear whether subsequent smaller-increment slope movement has occurred since that time. It is also a concern that the continued upstream migration of the stream channel nick point at the toe of the landslide may act to undercut the landslide and reactivate portions of the landslide over the lifespan of the pipeline. As a result of this uncertainty, we have classified the Location 1 landslide complex as Potentially Active.

3.2.4 Summary of High-Susceptibility Landslide Conditions at Location 2

The landslide complex at Location 2 is considered to be Potentially Active. Although no specific features were observed during the ground reconnaissance that indicated recent (past 50 years) landslide movement, the ground was obscured by snow cover. The Location 2 landslide complex is on a steep enough grade and contains slump block features large enough in size to damage or rupture the pipeline, should renewed ground movement occur. Even if the Location 2 landslide complex does not show indications of recent movement, we recommend that this area be treated as if movement may be expected to occur within the life of the pipeline. The mitigation plan presented in the section below provides recommended measures.

3.2.5 Mitigation Plans for Location 2

Although this landslide complex is likely more than 1,000 years old, it is unclear whether subsequent smaller-increment slope movement has occurred since that time. It is also a concern that the continued upstream migration of the stream channel nick point at the toe of the landslide may reactivate portions of the landslide over the lifespan of the pipeline. As a result of this uncertainty, we have classified the Location 2 landslide complex as Potentially Active.

The following are two possible mitigation options for constructing the pipeline in this area. We recommend Option 1 as the preferred alternative, which entails rerouting a segment of the pipeline ROW around the potential landslide hazard. Option 1 has the lowest risk of the two options. Option 2 involves conducting additional studies to characterize the landslide complex followed by the development of an intensive landslide mitigation and monitoring plan.

<u>Mitigation Option 1 (Alternative Routes)</u>

Mitigation Option 1 involves rerouting approximately 0.3 miles of the pipeline ROW, from about MP 27.4 to MP 27.7, to avoid the Location 2 landslide complex, as shown on Figure 2-2 and Photo 2-4 (Appendix A). We propose two possible alternative routes in this report, but other alternative routes may be possible. Possible Alternative Route A deviates from the LV17 route at MP 27.35 crosses the upper drainage south and east of the landslide complex and connects back with LV17 route at MP 27.7. Possible Alternative Route B deviates from the LV17 route at MP 27.4, descends the rounded nose of a

moderately sloping ridge line west of the landslide complex to the bottom of the valley where it follows the existing valley bottom and connects with the LV17 route at MP 27.2. As shown in Figure 2-2, other landslides were observed in the vicinity of Location 2, such that detailed ground reconnaissance would be needed to select the preferred location. During the February 2010 ground reconnaissance, possible Alternative Route B along the west side was walked, and appeared to be feasible. Photo 2-4 shows the two possible alternative routes.

Mitigation Option 2

Mitigation Option 2 consists of leaving the pipe in its existing proposed route. This option involves placing the pipeline across a potentially-active landslide feature, a situation we recommend to be avoided if a feasible alternative route exists. If an alternative route is not feasible, and the pipeline construction is to be attempted through the Location 2 landslide complex, further geologic studies are recommended to better understand the potential landslide hazard, followed by development of landslide mitigation and monitoring program to be followed for the lifespan of the pipeline. Repeated periodic measurement as well as event-driven measurement of slope and pipe monitoring instruments may allow for slower slope movement to be detected and addressed prior to a pipeline being damaged. However, rapid slope movement may not be detected and addressed prior to a pipeline being damaged. The landslide mitigation and monitoring program would be landslide-specific and should be developed by geotechnical professionals and would likely contain the following elements:

- Complete geologic and geotechnical studies to gather site-specific geomorphic, geologic, hydrogeologic, and geotechnical information about potentially active landslide complex crossed by the proposed pipeline route. The geologic and geotechnical studies may include additional landslide mapping studies, geophysical surveys, two subsurface explorations (soil/rock borings), and installation of two inclinometers and two piezometers, the data from which would be used to estimate the type and nature of the landslide, geometry (lateral and vertical limits) of the landslide, hydrogeology of the landslide, age of landslide, and rate and magnitude of potential landslide movement.
- Site specific hydrotechnical engineering investigation and analysis may be required to characterize site conditions and develop corresponding designs to capture and convey surface run-off along the ROW and for trench drainage flows. Refer to Appendix C for TransCanada guidelines.
- Estimate potential rates of landslide movement and define movement thresholds at which mitigation work such as stress relief excavation should be implemented. Such thresholds would depend on pipe characteristics, soil-pipe interaction analysis results, pipeline operating conditions, and code-defined maximum allowable stress levels.
- Develop specifications of engineering design mitigation measures to enhance slope stability and reduce the potential for damage to the pipeline in the event of slope movement. Typical measures contained within a mitigation plan could include surface and subsurface drainage enhancements, regrading of steeper slope segment, such as are present in the area of scarps, construction of toe berms or gravel-filled keyways through the slide plane and recommendations for the use of select, permeable and deformable backfill. The extent of such measures would be dependent upon the geometry of the current slide, existent subsurface water conditions and other factors that are currently not well defined.

- Construction observation by a geotechnical engineer or geologist to verify conditions at location specified in the mitigation plan, and to adjust mitigation measures to fit the field conditions as necessary.
- Installation and repeated measurement of slope monitoring instruments where the proposed pipeline route crosses the landslide complex. Such instruments would include inclinometers, geodetic survey points, and piezometers. Repeated, periodic measurement as well as event-driven measurement of slope monitoring instruments may allow for slope movement to be detected and addressed prior to a pipeline being damaged.
- Installation and repeated measurement of pipe monitoring instruments where the proposed pipeline route crosses potentially active landslides. Such pipe monitoring instruments can include strain gauges. Measurement of pipe strain can allow for detection and quantification of the effects of slope movement on the pipe, and can be used for development of a remedial action plan that can be implemented before the pipeline is damaged.
- Periodic visual surveys of the pipeline ROW where the pipeline passes through the landslide complex. The periodic visual surveys should be conducted by qualified professional geologists that are trained in geologic hazard identification to visually assess *changes to slopes that may indicate incipient or developing landslide movement*. Visual surveys should be both ground-based and conducted from the air, and should be conducted periodically, as well as after significant natural events (e.g., precipitation and earthquakes), as needed.

3.3 Location 3a and 3b: Milepost 96.1 – 96.4 (Hazard ID Number 31-QlsA(s))

3.3.1 Initial Identification from 2009 Study

A small slump in the stream bank was identified in the 2009 aerial reconnaissance study at about MP 96.6. The feature, designated in this report as Location 3b, is relatively small and is the direct result of over-steepening of the slope by stream bank erosion. The location and approximate extent of this feature is shown in Figure 3-1 and on Photo 3-1 (Appendix A).

3.3.2 Site Geology

Location 3 lies within an area characterized by the Pierre Shale. The Pierre Shale, of Upper Cretaceous age, consists of dark gray to black marine shale with veins and seams of gypsum, as wells as concretions of iron oxide. The unit commonly contains layers of bentonitic swelling clays. In the project area, it occurs as rolling dissected terrain. Landslides commonly occur in slope of Pierre Shale where groundwater is present, such as down-gradient of natural groundwater discharge areas (seeps, springs), or below irrigation ditches or other man-made water sources.

Rocks of the Fox Hills Formation lie along the south boundary of the Location 3 area. These units consist of interbedded light gray siltstone that coarsens upward to fine-grained sandstone, and dark gray shale, in the Trail City Member. Above the Trail City unit is the Timber Lake Member, consisting of brownish gray siltstone coarsening upward into fine to medium-grained sandstone. The relatively resistant sandstones of these units form a bounding ridge along the southwest side of the larger Location 3 earth flow feature described below.

3.3.3 Findings of the 2010 Ground Reconnaissance

Snow cover in the Location 3 area obscured the small slump feature, designated as Location 3b, along the creek which was identified in the 2009 study, as shown on Photo 3-1 (Appendix A). This small bank slump feature lies near the downslope edge of a much larger, and likely dormant earth flow complex, designated as Location 3a, which extends from the sandstone ridge along the southwest side of the area, as shown on Photos 3-1 and 3-2 (Appendix A). The large earth flow is about 1,500 feet wide, 2,800 feet long, and likely several tens of feet thick or more. The surface morphology of the earth flow is characterized by low gradient (10 percent, 6 degrees) slope with rounded hummocky topography with several ephemeral stream channels that cut across the earth flow surface. There is a 20 to 60 foot high scarp at the south edge of the earth flow complex. Despite the rounded and subdued appearance of the earth flow surface, there were several semi-intact, back-rotated blocks of sandstone observed within the slide mass, as shown on Photo 3-3 (Appendix A). These blocks appeared to have been “rafted” down slope by the earth flow from the cap rock of the Fox Hills Formation located 200-500 feet upslope along the ridge on the southwest side of the feature.

3.3.4 Summary of High-Susceptibility Landslide Conditions at Location 3a and 3b

The small slump feature (Location 3b) observed near MP 96.6 in 2009 is small enough in lateral extent and depth that it will likely be removed, and the affected portion of the slope reconstructed, during construction activities within the pipeline ROW. When the feature can be viewed on the ground after the snow cover is gone, the area for reconstruction of the slope can be delineated in detail. Recommendations for slope reconstruction associated with the slump locations are presented in the next section.

All of the prominent landslide features observed within the Location 3a large earth flow complex were subdued and subtle, such that we believe that initial movement likely occurred more than 1,000 years ago, and as a result we have classified this feature as being dormant. However, earth flows of this type may be re-activated by disturbances such as those due to pipeline construction. In the case of the Bison pipeline, the pipe trench would be cut across the toe of the large earth flow complex for a distance of approximately 0.28 miles. Despite the observed morphology that suggests that the large earth flow complex crossed by the proposed Bison LV17 route is not active, there is still some uncertainty because certain types of landslides, such as large earth flows, may have ground movement that is so slow that erosion and weathering obscure or alter evidence of movement. Estimating the rate of ground movement on these types of large earth flows can only be achieved with any degree of confidence through long-term monitoring of these features. We expect that movement, if any, within this feature is likely to be very slow, on the order of several inches to several feet per year. Therefore, we recommend mitigation measures as presented in the next section. The proposed Bison pipeline would be constructed down slope of the existing Williston Basin pipeline which crosses this same area.

3.3.5 Mitigation Plan for Location 3

The following mitigation plan should be followed to address concerns for both the bank slumping and the earth flow features at Location 3:

Small Slump at MP 96.6

- Once the snow is out of the area, the extents of the bank slump feature should be delineated to assure that it is adequately addressed during slope restoration following ROW construction.
- The slope at MP 96.6 should be regraded to a maximum slope of 4 horizontal to 1 vertical.

Large Earth Flow Complex at MP 96.09 to MP 96.38

We believe that the large earth flow complex is likely dormant and does not likely pose a potential hazard to the proposed pipeline, however, there is some uncertainty in this designation because estimating the rate of ground movement on these types of large, slow-moving, earth flows can only be achieved with any degree of confidence through long-term monitoring. As a result we recommend the following mitigation options:

- Complete detailed geologic mapping to better understand the extent and estimated activity level of the earth flow.
- Development of mitigation plans including surface and subsurface drainage enhancements if determined to be necessary as a result of the geologic mapping task.
- Define movement thresholds at which mitigation work such as stress relief excavation should be implemented should any ground movement be identified. Such thresholds would depend on pipe characteristics, soil-pipe interaction analysis results, pipeline operating conditions, and code-defined maximum allowable stress levels.
- Site specific hydrotechnical engineering investigation and analysis may be required to characterize site conditions and develop corresponding designs to capture and convey surface run-off along the ROW and for trench drainage flows. Refer to Appendix C for TransCanada guidelines.
- Construction observation by a geotechnical engineer or geologist to verify conditions at locations specified in the mitigation plan, and to adjust mitigation measures to fit the field conditions as necessary. Limit the length of open trench during pipeline construction within the earth flow boundary.
- Installation and repeated measurement of 6 to 8 geodetic survey points where the proposed pipeline route crosses the landslide complex. Repeated, periodic measurement as well as event-driven measurement of the geodetic survey points may allow for slope movement to be detected and addressed prior to a pipeline being damaged.
- Installation and repeated measurement of 4 to 5 sets of strain gauges where the proposed pipeline route crosses the large earth flow. Measurement of pipe strain can allow for detection and quantification of the effects of slope movement on the pipe, and can be used for development of a remedial action plan that can be implemented before the pipeline is damaged.

- Periodic visual surveys of the pipeline ROW where the pipeline passes through the landslide complex. The periodic visual surveys should be conducted by qualified professional geologists that are trained in geologic hazard identification to visually assess changes to slopes that may indicate incipient or developing landslide movement. Visual surveys should be both ground-based and conducted from the air, and should be conducted periodically, as well as after significant natural events (e.g., precipitation and earthquakes), as needed.

3.4 Location 4: Milepost 98.1 (Hazard ID Number 32-QlsA(s))

3.4.1 Initial Identification from 2009 Study

A possible small slump in the stream bank was identified in the 2009 aerial reconnaissance study at about MP 98.1.

3.4.2 Site Geology

Location 4 lies within an area characterized by the Pierre Shale. The Pierre Shale, of Upper Cretaceous age, consists of dark gray to black marine shale with veins and seams of gypsum, as wells as concretions of iron oxide. The unit commonly contains layers of bentonitic swelling clays. In the project area, it occurs as rolling dissected terrain. Landslides commonly occur in slope of Pierre Shale where groundwater is present, such as down-gradient of natural groundwater discharge areas (seeps, springs), or below irrigation ditches or other man-made water sources.

3.4.3 Findings of the 2010 Ground Reconnaissance

Snow cover in the Location 4 area obscured the details of small features. However, additional review of air photos, along with observations of the 2010 reconnaissance revealed that the feature identified in 2009 is the result of soil erosion and associated vegetation loss adjacent to the stream channel. The location and approximate extent of this feature is shown in Photo 4-1 (Appendix A). This location is no longer considered to be a location of High-Susceptibility Landslide Conditions.

3.4.4 Summary of High-Susceptibility Landslide Conditions at Location 4

Additional review of air photos, along with observations of the 2010 reconnaissance revealed that the feature identified in 2009 is the result of soil erosion and associated vegetation loss adjacent to the stream channel. Thus, this location is no longer considered to be a location of High-Susceptibility Landslide Conditions.

3.5 Location 5: Milepost 131.6 (Hazard ID Number 37-QlsA(s))

3.5.1 Initial Identification from 2009 Study

Small slump features in the stream bank were identified in the 2009 aerial reconnaissance study at about MP 131.6. These features are relatively small and the direct result of over-steepening of the slope by stream bank erosion. The location and approximate extent of this feature are shown in Figure 5-1. The features appear to lie within or encroach upon the ROW, but not necessarily cross the pipe centerline.

3.5.2 Site Geology

Location 5 lies near the contact of the Trail City Member of the Fox Hills Formation (Upper Cretaceous age) with the stratigraphically underlying Pierre Shale. The Trail City Member consists of interbedded light gray siltstone that coarsens upward to fine-grained sandstone and dark gray shale. The Pierre Shale consists of dark gray to black marine shale with veins and seams of gypsum, as wells as concretions of iron oxide. The unit commonly contains layers of bentonitic swelling clays. Landslides commonly occur in slope of Pierre Shale where groundwater is present, such as down-gradient of natural groundwater discharge areas (seeps, springs), or below irrigation ditches or other man-made water sources.

3.5.3 Findings of the 2010 Ground Reconnaissance

Snow cover in the Location 5 area obscured the small slump features along the creek which were identified in the 2009 study. The approximate location of the features is shown in Photo 5-1 (Appendix A).

3.5.4 Summary of High-Susceptibility Landslide Conditions at Location 5

The small slump features observed near MP 131.6 in 2009 are small enough in extent that those portions with the potential to affect the pipeline will be removed, and the affected portion of the slope reconstructed, during construction activities within the pipeline ROW. When the features can be viewed on the ground after the snow cover is gone, the area for reconstruction of the slope can be delineated in detail. Recommendations for slope reconstruction associated with the slump locations are presented in the next section.

3.5.5 Mitigation Plan for Location 5

The following mitigation plan should be followed to address concerns for the bank slumping features at Location 5:

- Once the snow is out of the area, the extents of the bank slump feature should be delineated to assure that it is adequately addressed during slope restoration following ROW construction.
- The slope at MP 131.6 slump area should be graded to a maximum inclination of 4 horizontal to 1 vertical.
- Conduct annual visual monitoring of the reconstructed slope and stream crossing to check for future erosion/slumping encroachment.

3.6 Location 6: Milepost 144.3 (Hazard ID Number 38-QlsA(s))

3.6.1 Initial Identification from 2009 Study

A small slump in the stream bank was identified in the 2009 aerial reconnaissance study at about MP 144.3. This feature is relatively small and is the direct result of over-steepening of the slope by stream bank erosion. The location of this feature is shown in Photo 6-1 (Appendix A).

3.6.2 Site Geology

Location 6 lies within stream alluvium of Buffalo Creek. Areas outside the floodplain are within the Pierre Shale Formation. The Pierre Shale, of Upper Cretaceous age, consists of dark gray to black marine shale with veins and seams of gypsum, as wells as concretions of iron oxide. The unit commonly contains layers of bentonitic swelling clays. Landslides commonly occur in slope of Pierre Shale where groundwater is present, such as down-gradient of natural groundwater discharge areas (seeps, springs), or below irrigation ditches or other man-made water sources.

3.6.3 Findings of the 2010 Ground Reconnaissance

On-the-ground reconnaissance revealed that the pipeline alignment lies approximately 250 feet to the west of the proposed pipe centerline.

3.6.4 Summary of High-Susceptibility Landslide Conditions at Location 6

Since the observed slump feature lies well outside of the pipeline ROW, and no other features of concern were observed during the ground reconnaissance, Location 6 is no longer considered to be a High-Susceptibility Landslide Location.

3.7 Location 7: Milepost 170.7 (Hazard ID Number 39-QlsP(s)

3.7.1 Initial Identification from 2009 Study

A small feature was identified in the stream bank during the 2009 aerial reconnaissance study, at about MP 170.7. The location and approximate extent of this feature are shown in Figure 7-1 and Photo 7-1 (Appendix A). The feature appears to lie within the ROW, but does not necessarily cross the pipe centerline.

3.7.2 Site Geology

Location 7 lies adjacent to the alluvium of North Fork Coal Bank Creek. The slopes adjacent to the creek are characterized by the Ludlow Member of the Fort Union Formation. This unit is of Paleocene age, and consists of gray-brown and yellow-brown silt, sand, and clay, sandstone, and lignite.

3.7.3 Findings of the 2010 Ground Reconnaissance

Snow cover in the Location 7 area obscured most of the ground features during the 2010 ground reconnaissance. However, a large area of ice was visible at the toe of the slope, the result of groundwater seepage from the slope. Upslope of the ice, an area of hydrophyllic grass and possible soft wet soils can be seen (Photo 7-1). The hydrophyllic vegetation covers the lower portion of the slope where seepage occurs. The full extent of the seepage and related possible shallow-seated instability appears to extend laterally along the stream bank for less than 100 feet. The pipe centerline crosses along the northwest boundary of the seep area and soft/wet soil area.

3.7.4 Summary of High-Susceptibility Landslide Conditions at Location 7

The feature observed near MP 170.7 includes groundwater seepage and associated potential shallow-seated slope instability. Although regrading of the slope as part of pipeline construction may stabilize the area of possible slope instability, groundwater seepage emerging from the slope during construction could lead to construction problems with maintaining an open trench, as well as perennial, shallow slope instability on the ROW at this location.

3.7.5 Mitigation Plan for Location 7

We recommend that the pipe centerline be shifted as far as feasible to the northwest within the existing proposed LV17 ROW, as shown on Photo 7-1 (Appendix A). This would place the pipe along a small ridge, and outside the areas for concern of groundwater seepage and potential slope instability. Reconstruction of the slope should follow practices and typical details included in the construction plans for use at stream crossings. During construction, the pipe trench and ROW slope should be observed by an experienced engineer to determine if specific drainage measures are needed to control groundwater. Following pipeline construction, annual visual monitoring of the reconstructed slope should be done.

Also, site specific hydrotechnical engineering investigation and analysis may be required to characterize site conditions and develop corresponding designs to capture and convey surface run-off along the ROW and for trench drainage flows. Refer to Appendix C for TransCanada guidelines.

3.8 Location 8: Milepost 187.5 to 187.6 (Hazard ID Number 43-QlsA(s))

3.8.1 Initial Identification from 2009 Study

During the 2009 aerial reconnaissance, features were observed on both sides of the creek that appeared to be possible landslides. Photo 8-1 shows the features identified on the east side of the creek. This creek is a tributary to the Little Missouri River.

3.8.2 Site Geology

Location 8 lies within an area characterized by Quaternary and Upper Tertiary sediments, largely consisting of river sediments, overlying the Fox Hills Formation, of Upper Cretaceous age. The Fox Hills Formation consists of olive-brown sand, shale, and sandstone of marine origin.

3.8.3 Findings of the 2010 Ground Reconnaissance

Suspected landslide features identified on the west side of the creek during the 2009 aerial reconnaissance were found to be channel migration features on older stream terraces. The features identified on the east side of the creek are shown on Photo 8-1 (Appendix A). The largest of these features is located approximately 200 feet south of the pipe centerline. Ground reconnaissance of this feature revealed it to be a product of surface erosion and possible subsurface erosion (piping). Contacts between distinct beds and continuous sandstone layers were traced across the lower and central portion of the feature, such that no downslope displacement was indicated. A shallower erosion area between

the deeper, main erosion feature and the pipe centerline is shown to the left-center in Photo 8-1 (Appendix A). The proposed pipe centerline lies along the north margin of this shallow erosion feature. No evidence of slope instability was observed within the pipeline ROW or adjacent areas, and thus this site is no longer considered to have High-Susceptibility Landslide Conditions. However, appropriate measures for erosion control following pipeline construction should be taken.

3.8.4 Summary of High-Susceptibility Landslide Conditions at Location 8

On-the-ground observations during the 2010 reconnaissance revealed that the feature identified in 2009 is the result of near-surface erosion of soils and weak rock units, and that no landslides are present. Thus, this location is no longer considered to be a location of High-Susceptibility Landslide Conditions.

3.9 Location 9: Milepost 277.7 (Hazard ID Number 62-QlsA(s))

3.9.1 Initial Identification from 2009 Study

During the 2009 aerial reconnaissance, features were observed on the east side of the creek that appeared to be a possible landslide. Photo 9-1 shows the features that were identified in 2009 as suspected landslide scarps.

3.9.2 Site Geology

Location 9 lies within an area characterized by the Sentinel Butte Formation, of Paleocene age. These deposits consist of interlayered lake and swamp sediments; gray-brown silt, sand, clay, sandstone, and lignite.

3.9.3 Findings of the 2010 Ground Reconnaissance

The scarp-like features identified during the 2009 aerial reconnaissance were examined on the ground during the 2010 site visit. These features, approximately 12 to 18 inches in height, appear to be the result of sub-erosion of layered soils, a process which often forms small topographic steps, particularly along slopes which steepen toward a drainage. No evidence was found of a landslide. The proposed pipe centerline crosses the highest of the sub-erosion features, as shown on Photo 9-1 (Appendix A). However, no specific measures are expected to be needed for pipeline construction other than appropriate practices for curbing erosion along the ROW following construction. Since the features were found to be the result of soil erosion rather than landslide activity, this site is no longer considered to have High-Susceptibility Landslide Conditions.

3.9.4 Summary of High-Susceptibility Landslide Conditions at Location 9

On-the-ground observations during the 2010 reconnaissance revealed that the features identified in 2009 is the result of erosion of soils, and that no landslides are present. Thus, this location is no longer considered to be a location of High-Susceptibility Landslide Conditions.

3.10 Location 10: Milepost 282.2 (Hazard ID Number 66-QlsA(e))

3.10.1 Initial Identification from 2009 Study

The feature at MP 282.2 was identified in the 2009 aerial reconnaissance study as a possible Active Earth flow feature. At this location, the pipeline alignment climbs a steep bluff at an inset where it appeared that slope failure had flattened the grade (Figure 10-1, Photos 10-1 and 10-2 in Appendix A). Displaced blocks of sandstone cap rock were visible on the slope, along with irregular topography, as shown on Photo 10-3 (Appendix A).

3.10.2 Site Geology

Location 10 lies along the bluffs on the north side of the Heart River. The bluffs consist of rock layers of the Tongue River Member of the Fort Union Formation, of Paleocene age. The units consist of weakly-consolidated yellowish-gray to grayish-yellow fined-grained sandstone and siltstone intermixed with light olive-gray to yellowish-gray claystone. The unit also contains brown carbonaceous mudstone, ironstone, concretionary limestone and lignite.

3.10.3 Findings of the 2010 Ground Reconnaissance

Landowner restrictions only permitted landing at the top of the bluff. Snow cover was thick and drifted at the time of our February 2010 site visit. However, the main features of the site were visible, including scattered landslide debris in the form of detached, semi-intact blocks of rock that had rafted down from the crest of the bluff. Photo 10-3 (Appendix A) shows displaced blocks on the slope. The landslide blocks were on the order of 8 to 10 feet wide however they were rounded and subdued and much of their original size had been reduced by weathering and erosion. As such, we believe that these landslide features are potentially active (50 to 1,000 years old) and the slope above this location is not an active landslide. Conditions on the slope are interpreted to be the result of a combination of shallow (less than 10 feet deep) slope processes, including erosion, shallow slumping. However, the dominant mass wasting process on the slope at this time appears to be surface erosion. The slumping component appears to be inactive, however, slope conditions are such that these processes could naturally recur over time as the bluff slope continues to recede, and could be accelerated by over-steepening the slope or adversely changing hydrology of the slope. The lower portions of the slope were not accessible at the time of the Feb 2010 site visit, but we observed during earlier site visits that the area of active erosion is concentrated on the steeper upper slope as shown on Photos 10-1 to 10-3 (Appendix A). The area encompassing the active erosion and potentially active landslide deposits is about 80 feet wide and 100 feet long, and is likely 10 feet deep or less. The proposed LV17 route ascends the slope about 20 feet west of the erosion area. A gently-sloping planar slope is present below the lower limit of the steeper erosion area. The gentle slope is vegetated and has no evidence of slope instability or active surface erosion within the vicinity of the proposed route. The proposed Horizontal Directional Drilling (HDD) crossing of the river to the south of Location 10 ends about mid-slope along this gentle slope. The ground at the top of the bluff is very flat. The gradient along the existing slope between the bench at the

toe and the crest of the bluff averages about 25 degrees. Natural intact slopes along the bluff range up to 35 to 40 degrees.

3.10.4 Summary of High-Susceptibility Landslide Conditions at Location 10

The feature at Location 10 is characterized as a slope debris deposit which has formed on the slope in response to various mass-wasting processes, including surface erosion and shallow landslide processes. Although no specific features were observed during the ground reconnaissance that indicated recent (past 50 years) landslide movement, the ground was obscured by snow cover. The area is considered to be Potentially Active, in terms of potential for future downslope movements of slope debris and/or sloughing from the crest of the bluff. However, the proposed pipe alignment ascends through an area where there is no evidence of shallow landsliding and a lesser degree of surface erosion.

3.10.5 Mitigation Plans for Location 10

It is our understanding that the proposed construction of the pipeline for the Location 10 slope calls for installing the pipeline at grade in the lower and mid portions of the slope and laying back the upper portion of the slope to accommodate the pipeline ROW through the steeper top crest of the bluff. We recommend that the pipe be constructed through intact bedrock below the lower limit of loose debris deposits. Figure 10-2 shows a profile of Location 10, with the estimated configuration for laying back the slope and placing the pipe. The following steps comprise the mitigation plan for Location 10:

- Prior to construction, subsurface explorations in the form of test pits should be used to determine the depth of debris deposits on the upper portions of the slope. Results will determine the required burial depth of the pipe in this slope.
- Site specific hydrotechnical engineering investigation and analysis may be required to characterize site conditions and develop corresponding designs to capture and convey surface run-off along the ROW and for trench drainage flows. Refer to Appendix C for TransCanada guidelines.
- The slope is to be laid back along the ROW alignment through the bluff. The design slope along the pipe centerline is 3 horizontal to 1 vertical, which is considered adequate for slope stability in the intact slope materials. Side slopes which may be needed to match contours to the slopes adjacent to the ROW should be cut no steeper than 1.5 horizontal to 1 vertical.
- Trench breakers (trench plugs) should be used in construction of the pipeline down the slope from the top of the bluff to the HDD exit point, using typical details located in Appendix B. These trench breakers include provision for conveyance of water which may be captured behind the trench breaker, so that water is not allowed to collect in the slope.
- The slope should be restored/reclaimed using water bars, directing surface water flows to an appropriate discharge point. Typical details located in Appendix B should be used.
- Conduct annual visual monitoring of the slope to inspect performance of surface drainage controls and overall slope condition.

3.11 Location 11: MP 32.7 to 33.4 (Hazard ID Number 21-QlsD(s))

3.11.1 Initial Identification from 2009 Study

During the 2009 aerial reconnaissance and air photo review, features were observed along the proposed alignment between MP 32.7 and MP 33.4 which appeared to be areas of dormant landslides. Since these were interpreted to be dormant features, none of these landslides were included on the 2009 list of Locations of High-Susceptibility Landslide Conditions (Golder 2009).

3.11.2 Site Geology

Location 11 lies within an area characterized by the Wasatch Formation, of Tertiary age. The Wasatch Formation includes layers of yellowish-gray to light brown, fine-grained sandstone, light gray siltstone and shale, brown carbonaceous shale, and coal. Flatter slopes through this area have residual soils of the Wasatch Formation. The residual soils are materials which have weathered in place to form soils from the parent bedrock. The Wasatch Formation is often observed to be susceptible to landslide formation where slope stability is dominated by the weaker layers.

Mapping published by the USGS shows a landslide within the Location 11 area, at about MP 32.7. Other mapped landslides are shown in areas away from the proposed ROW, indicating that landslides are common in this area. These features are described by USGS as blocks or masses of bedrock and surficial materials which have moved downslope through slumping and/or earth flow. They occur primarily on steep lower hillslopes adjacent to valley bottoms. USGS describes that “some are stabilized but many continue to move”.

3.11.3 Findings of the 2010 Ground Reconnaissance

Landing of the helicopter at this site was not permitted during any of the 2009/2010 studies, due to landowner restrictions. During the 2010 flight, several passes were made over the area to make such visual observations as could be reasonably obtained from the aircraft. Several landslide features were observed from the air, some of which exhibited evidence of recent movements. Each of these landslide features are shown on Figure 11-1, and described in the sections below. The landslides were assigned corresponding numbers in sequence with the original Location Numbers and Hazard ID Numbers used in Table 1 of the letter report (Golder 2009a) and Table 1 of the 2009 report of geologic conditions (Golder 2009b).

Location 11a (Hazard No. 21a), MP 32.7: Photo 11a-1 shows the Location 11a landslide from the air. This landslide feature exhibits both slump and earth flow characteristics including a well-defined head scarp, internal ground deformation and displacement, and a bulging lobate toe that has blocked an ephemeral stream channel at the base of the slide. A pond has formed in the stream channel as a result of the landslide dam. The landslide features appear to be very fresh and the landslide appears to be active. The landslide measures about 300 feet wide and 200 feet long. There was a 10-20 foot high

head scarp, and the depth of the landslide mass is likely on the order of several tens of feet deep. The active head scarp of this landslide is located about 150 feet east, and down slope of the proposed LV17 ROW and further upslope migration, if any, of this landslide would likely be towards the proposed ROW.

Location 11b (Hazard No. 21b), Photo 11b-1 shows the Location 11b landslide from the air. This slump-type landslide was partially covered with snow during the February 2010 aerial reconnaissance; however, the landslide morphology appeared rounded and subdued. The landslide is likely dormant but we have classified it as potentially active due to this uncertainty. The landslide measures about 150 feet wide, 150 feet long, and the depth of the landslide is likely on the order of several tens of feet deep. The proposed ROW is located approximately 10 feet from left-lateral edge of the landslide; however, the direction of landslide movement is roughly parallel to the ROW so migration of this landslide towards the proposed ROW is not likely.

Location 11c (Hazard No. 21c), Photo 11c-1 shows the Location 11c landslide from the air. This slump-type landslide was partially covered with snow during the February 2010 aerial reconnaissance, however, the landslide morphology appeared fresh, and we have therefore classified this landslide as being active. The landslide is located on a steep slope above the proposed ROW. The landslide measures about 150 feet wide, 150 feet long, about 70 feet high, and the depth of the landslide mass is likely on the order of several tens of feet deep. The toe of the active landslide is encroaching on the proposed ROW and within approximately 20-30 feet from the proposed pipeline centerline. The direction of landslide movement is towards the ROW.

3.11.4 Summary of High-Susceptibility Landslide Conditions at Location 11

On-the-ground observations were not allowed during the 2010 reconnaissance. On-the-ground reconnaissance is essential to assess conditions at each of these features and their potential to affect the proposed pipeline. Based on the most recent site observations and further review of the available aerial photography, the following sites between MP 32.7 and MP 33.4 are considered to be Locations of High-Susceptibility Landslide Conditions:

In addition to Locations 11a through 11c, additional landslides were identified in the 2009 study between MP 32.7 and 33.4, but not included in Table 1 of the letter report (Golder 2009). These are the Active Landslide Hazard ID 22-QlsA(s) which lies well off the ROW at a distance of approximately 1,300 feet from the proposed pipe centerline, and the Dormant Landslide Hazard ID 23-QlsD(s). The 2010 aerial reconnaissance allowed observation of feature number 23-QlsD(s), but did not yield any observations that would change its hazard rating.

Based on existing information of these features relative to the pipeline alignment, Locations 11a, 11b, and 11c will require specific mitigation to accommodate pipeline construction in the proposed ROW.

3.11.5 Mitigation Plans for Location 11a-c

The three landslide features 11a, 11b and 11c described above are not crossed by the proposed LV17 pipeline centerline; however, they are located close enough that a possible future hazard might develop if the landslides were to begin to encroach on the pipeline once it has been installed. We recommend the proposed pipeline be located as far west as possible within the currently proposed ROW in an effort to reduce the potential for future encroachment by the three landslides (11a, 11b and 11c). This proposed alternative route within the existing proposed ROW is shown on Figure 11-1. We also recommend the landslides should be monitored for the life of the Bison pipeline. We recommend the following mitigation.

- Locate proposed pipeline as far west as possible within the currently proposed ROW in an effort to reduce the potential for future encroachment by the three landslides.
- Complete detailed landslide surface mapping once the site is free from snow and access has been granted to further confirm our initial assessment of the potential landslide hazard.
- Site specific hydrotechnical engineering investigation and analysis may be required to characterize site conditions and develop corresponding designs to capture and convey surface run-off along the ROW and for trench drainage flows. Refer to Appendix C for TransCanada guidelines.
- No grading should occur within the mapped perimeter of the landslides.
- Construction observation by a geotechnical engineer or geologist to verify conditions at location specified in the mitigation plan, and to adjust mitigation measures to fit the field conditions as necessary.
- Conduct a civil survey of the site to delineate the extent of the landslides. Install easily identifiable survey monuments at known distances from the landslide boundaries In order to provide the ability for field staff to visually identify any potential further expansion of the landslides relative to the pipeline ROW.
- Periodic visual surveys of the pipeline ROW where the pipeline passes through the landslide complex. The periodic visual surveys should be conducted by qualified professional geologists that are trained in geologic hazard identification to visually assess changes to slopes that may indicate incipient or developing landslide movement. Visual surveys should be both ground-based and conducted from the air, and should be conducted periodically, as well as after significant natural events (e.g., precipitation and earthquakes), as needed.

4.0 LIMITATIONS

This report was prepared in general conformance with the level of effort and care exercised by other engineering geologists and geotechnical consultants, working at this time and in this area, under similar constraints of access, budget and schedule. No other warranty is express or implied.

We appreciate the opportunity to work with you on this project. If you have questions or would like to discuss the contents of this report, please contact the undersigned.

Sincerely,

GOLDER ASSOCIATES INC.

Nancy C. Dessenberger
Senior Geologist/Consultant

James W. Niehoff
Program/Practice Leader

NCD/JWN/asf

5.0 REFERENCES

Baum, R.L., Savage, W.Z, and Wasowski, J., 2003, Mechanics of Earth Flows: in International Workshop on Occurrence and Mechanisms of Flows in Natural Slopes and Earthfills, IW-Flows 2003, Sorrento, May, 14-16, 2003.

CEPA, 2005. *Pipeline Associated Watercourse Crossings, 3rd Edition*, Canadian Energy Pipeline Association (CEPA) and the Canadian Gas Association (CGA), October 2005.

Clayton, L., S.R. Moran, J.P. Bluemle, and C.G. Carlson. 1980. *Geologic Map of North Dakota*; scale: 1:500,000. Reston, VA: U.S. Geological Survey.

Federal Energy Regulatory Commission (FERC). *Upland Erosion Control, Revegetation, and Maintenance Plan*. January 17, 2003.

Federal Energy Regulatory Commission (FERC). *Wetland Construction and Mitigation Procedures*. January 17, 2003.

Golder Associates Inc. 2009. *Identification and Recommended Mitigation for Locations that are Highly Susceptible to Landslides Along the Proposed Pipeline Right-of-Way, Proposed Bison Pipeline Project, Wyoming to North Dakota*, dated October 8, 2009,

Jackson, J. A., 1997, Glossary of Geology, Fourth Edition. American Geological Institute, Alexandria, Virginia, 769p.

Mowat, George D. 1980. *Geologic Map and Lignite Resources of the Clark Butte NE Quadrangle, North Dakota*. (Coal investigations map C-86). Reston, VA: U.S. Geological Survey.

PRCI, 1996. *Water-Crossing Design and Installation Manual*. Pipeline Research Council International, Inc. (PRCI), PR-237-9428, Trow Consulting Engineers, August 1996.

Radbruch-Hall, D.H., Colton, R.B., Davies, I.L., Skipp, B.A. and Varnes, D.J. (1982) *Landslide Overview Map of the Conterminous United State*. 1:7,500,000 scale. U.S. Geological Survey Paper 1183, U.S. Government Printing Office, Washington.

Reheis, M.C. 1987. *Surficial Geologic Map of the Gillette 30' x 60' quadrangle, Campbell and Crook counties, Wyoming*. (Coal investigations map C-105). Reston, VA: U.S. Geological Survey.

Reheis, M.C. and V.S. Williams. 1984. *Surficial Geologic Map of the Recluse 30' x 60' quadrangle, Wyoming and Montana*. (Coal investigations map C-81-F). Reston, VA: U.S. Geological Survey.

Selby, M.J., 1993, Hillslope Materials and Processes: Oxford University Press, Oxford, 451p.

Vuke, S.M., E.M. Wilde, R.B. Colton, and R.N. Bergantino. 2001. *Geologic Map the Alzada Quadrangle, 30'x60' Quadrangle, Eastern Montana.* (Open File No. 433). Montana Bureau of Mines and Geology.

Vuke, S.M., E.M. Wilde, R.B. Colton, and R.N. Bergantino. 2001. *Geologic Map the Ekalaka Quadrangle, 30'x60' Quadrangle, Eastern Montana.* (Open File No. 430). Montana Bureau of Mines and Geology.

Williams, V.S. 1978c. *Surficial geologic map of the Truman Draw quadrangle, Campbell County, Wyoming.* (Miscellaneous field studies map MF-953). Reston, VA: U.S. Geological Survey. Online: http://ngmdb.usgs.gov/Prodesc/proddesc_6791.htm .

Williams, V.S. and P. McElwain. 1978. *Surficial geologic map of the Wildcat quadrangle, Campbell County, Wyoming.* (Miscellaneous field studies map MF-989). Reston, VA: U.S. Geological Survey. Online: http://ngmdb.usgs.gov/Prodesc/proddesc_6834.htm.

TABLES

TABLE 1

LOCATIONS OF HIGH-SUSCEPTIBILITY LANDSLIDE CONDITIONS, UPDATED BASED ON 2010 GROUND RECONNAISSANCE, AND RECOMMENDED ACTIONS PROPOSED BISON PIPELINE

Milepost	Hazard ID Number	Location Number from 2009 Study (Golder 2009a)	Approximate Size of Feature	Landslide Hazard Conditions	Mitigation Plan
19.7 – 19.9	3-QlsP(e)	1	NA	Not a landslide, based on 2010 site visit observations. Location contains erosion features and steep channel bank cut. See Figure 1-1.	No landslide mitigation needed. Mitigation recommended is only for slope erosion and to set back pipe from edge of steep stream bank. The pipeline alignment should be located as far as possible from the existing steep slope within the proposed Right-of-Way (ROW). This alignment may intersect with an existing drainage pathway and identified erosion features (i.e. head scarps and knick-points). The presence of localized and focused surface drainage may result in ROW surface erosion and trench backfill drainage issues. Site specific hydrotechnical engineering investigation and analysis may be required to characterize site conditions and develop corresponding designs to capture and convey surface run-off along the ROW and for trench drainage flows. Refer to Appendix B for typical examples. Trench breakers should be used in construction of the pipeline down the slope from MP 19.82 to 19.90. The slope from MP 19.82 to 19.90 should be restored/reclaimed using water bars and crowning of the slope above the pipe to direct surface runoff to the west, away from the pipeline ROW and away from the lip of the steep channel cut. Annual visual monitoring of the slope should be done, to check for enlargement of the steep channel cut toward the pipeline, and for erosion damage along the ROW.

TABLE 1

LOCATIONS OF HIGH-SUSCEPTIBILITY LANDSLIDE CONDITIONS, UPDATED BASED ON 2010 GROUND RECONNAISSANCE, AND RECOMMENDED ACTIONS PROPOSED BISON PIPELINE

Milepost	Hazard ID Number	Location Number from 2009 Study (Golder 2009a)	Approximate Size of Feature	Landslide Hazard Conditions	Mitigation Plan
27.5	14-QlsA(s)	2		Potentially Active landslide complex crossed obliquely by proposed pipe centerline. Includes possibly three slump-type landslides that are adjacent to one another. The landslide complex is approximately 220 feet long, 630 feet wide (parallel to the drainage), and is estimated to be in the range of 20 to 40 feet deep. Individual slump blocks are about 70 to 80 feet wide, and range from about 15 to 30 feet high. An unnamed, ephemeral stream flows through an incised channel at the base of the landslide complex that has 4- to 6-foot-high incised step (nick point) that appears to be migrating slowly up channel at the base of the landslide. . See Figures 2-1 and 2-2.	**Mitigation Option 1 (Alternative Route)** Reroute approximately 0.3 miles of the pipeline, from about MP 27.4 to MP 27.7, to avoid the Location 2 landslide complex. Lowest Risk Option. **Mitigation Option 2 (Additional Studies and Monitor in Place)** Higher Risk option. Complete geologic and geotechnical studies to characterize landslide complex. Advance two borings within slide mass. Define movement thresholds at which mitigation work, such as stress relief excavation, should be implemented. Provide surface and subsurface drainage enhancements. Site specific hydrotechnical engineering investigations and analysis may be required to characterize site conditions and develop corresponding designs to capture and convey surface run-off along the ROW and for trench drainage flows. Refer to Appendix C for typical examples. Use select, permeable and deformable backfill to enhance slope stability and reduce the potential for damage to the pipeline in the event of slope movement. Construction observation should be conducted by a geotechnical engineer/geologist. Slope monitoring instruments such as inclinometers (2), geodetic survey points (6), and piezometers (2), and pipe monitoring instruments such as strain gauges (3-4) should be installed and measured periodically. Visual surveys should be conducted by qualified professional geologists that are both ground-based and conducted from the air. These surveys should be conducted periodically, as well as after significant natural events (e.g., precipitation and earthquakes), as needed.

TABLE 1

LOCATIONS OF HIGH-SUSCEPTIBILITY LANDSLIDE CONDITIONS, UPDATED BASED ON 2010 GROUND RECONNAISSANCE, AND RECOMMENDED ACTIONS PROPOSED BISON PIPELINE

Milepost	Hazard ID Number	Location Number from 2009 Study (Golder 2009a)	Approximate Size of Feature	Landslide Hazard Conditions	Mitigation Plan
32.8	21a-QlsA(s/e)	NA (designated location 11a in text)		Active landslide located about 150 feet east, and down slope of the proposed LV17 ROW. Landslide measures about 200 feet wide, 140 feet long, and several tens of feet deep. The landslide toe has blocked an ephemeral stream channel at the base of the slide and water is ponded in the channel. There is a potential for this landslide to migrate upslope and encroach on the ROW during the lifespan of the pipeline. See Figure 11-1.	**Mitigations recommendations for Locations 11a, 11b, 11c** Locate proposed pipeline as far west as possible within the currently proposed ROW in an effort to reduce the potential for future encroachment by the three landslides. Complete detailed landslide surface mapping once the sites are free from snow to further confirm our initial assessment of the potential landslide hazard. No grading should occur within the mapped perimeter of the landslides. Control surface run-off on the ROW and landslide and direct surface water away from the landslides where possible. Site specific hydrotechnical engineering investigations and analysis may be required to characterize site conditions and develop corresponding designs to capture and convey surface run-off along the ROW and for trench drainage flows. Refer to Appendix C for typical examples. Construction observation should be conducted by a geotechnical engineer or geologist to verify conditions at location specified in the mitigation plan, and to adjust mitigation measures to fit the field conditions as necessary. Conduct a civil survey of the sites to delineate the extent of the landslides. Install easily identifiable survey monuments at known distances from the landslide boundaries in order to provide the ability for field staff to visually identify further expansion of the landslides relative to the pipeline ROW. Conduct periodic visual surveys of the pipeline ROW where the pipeline passes through the landslide complex. Visual surveys should be both ground-based and conducted from the air, and should be conducted periodically, as well as after significant natural events (e.g., precipitation and earthquakes), as needed.
32.85	21b-QlsP(s)	NA (designated location 11b in text)		Potentially active landslide located approximately 10 feet east and down slope of proposed ROW. Landslide measures 150 feet wide, 150 feet long, several tens of feet deep. See Figure 11-1.	
32.95	21c-QlsA(s)	NA (designated location 11c in text)		The landslide is located on a steep slope above the proposed ROW. Active landslide located about 20-30 feet from the proposed pipeline centerline and is encroaching on the proposed ROW. The direction of landslide movement is towards the ROW. The landslide measures about 150 feet wide, 150 feet long, about 70 feet high, and the depth of the landslide mass is likely on the order of several tens of feet deep. See Figure 11-1.	

TABLE 1

LOCATIONS OF HIGH-SUSCEPTIBILITY LANDSLIDE CONDITIONS, UPDATED BASED ON 2010 GROUND RECONNAISSANCE, AND RECOMMENDED ACTIONS PROPOSED BISON PIPELINE

Milepost	Hazard ID Number	Location Number from 2009 Study (Golder 2009a)	Approximate Size of Feature	Landslide Hazard Conditions	Mitigation Plan
96.09 to 96.37	QlsD(e)	3a		Large, likely dormant, earth flow complex, crossed by the proposed pipeline from MP 96.09 to 96.37. The earth flow is located on a lower gradient slope and measures about 1,500 feet wide, 2,800 feet long, and likely several tens of feet thick or more. See Figure 3-1.	**Monitor in Place** Complete detailed geologic mapping to better understand the extent and estimated activity level of the earth flow complex. Define movement thresholds at which mitigation work such as stress relief excavation should be implemented. Provide ground surface and subsurface drainage enhancements and direct water away from landslide where possible. Site specific hydrotechnical engineering investigations and analysis may be required to characterize site conditions and develop corresponding designs to capture and convey surface run-off along the ROW and for trench drainage flows. Refer to Appendix C for typical examples. Install and periodically measure 6 to 8 geodetic survey points where the proposed pipeline route crosses the landslide complex. Installation and periodically measure 4 to 5 sets of strain gauges to allow for detection and quantification of the effects of slope movement on the pipe. Construction observation should be conducted by a geotechnical engineer/geologist. Visual surveys should be conducted by qualified professional geologists that are both ground-based and conducted from the air, and should be conducted periodically, as well as after significant natural events (e.g., precipitation and earthquakes), as needed.
96.6	31-QlsA(s)	3b		Proposed centerline crossing Active Slump in creek bank, and crossing toe of dormant earthflow. See Figure 3-1.	Define extents of stream bank slump feature after spring snowmelt. Reconstruct slope at MP 96.6 slump using a 4H:1V (Horizontal:Vertical) slope.

TABLE 1

LOCATIONS OF HIGH-SUSCEPTIBILITY LANDSLIDE CONDITIONS, UPDATED BASED ON 2010 GROUND RECONNAISSANCE, AND RECOMMENDED ACTIONS PROPOSED BISON PIPELINE

Milepost	Hazard ID Number	Location Number from 2009 Study (Golder 2009a)	Approximate Size of Feature	Landslide Hazard Conditions	Mitigation Plan
98.1	32-QlsA(s)	4	NA	Not a landslide, based on 2010 site visit observations.	No landslide mitigation needed.
131.6	37-QlsA(s)	5		Active slumps encroaching on proposed ROW. See Figure 5-1.	Define extents of stream bank slumps after spring snowmelt. Reconstruct slope using a 4H:1V slope. Conduct annual visual monitoring.
144.3	38-QlsA(s)	6		No landslide within ROW. Landslide identified in 2009 is 250 feet from ROW.	No landslide mitigation needed.
170.7	39-QlsP(s)	7		Potentially unstable seepage area in ROW. See Figure 7-1.	Relocate centerline of pipe to far west side of ROW to avoid area of concern. Site specific hydrotechnical engineering investigations and analysis may be required to characterize site conditions and develop corresponding designs to capture and convey surface run-off along the ROW and for trench drainage flows. Refer to Appendix C for typical examples.
187.5-187.6	43-QlsA(s)	8	NA	Not a landslide, based on 2010 site visit observations.	No landslide mitigation needed.

TABLE 1

LOCATIONS OF HIGH-SUSCEPTIBILITY LANDSLIDE CONDITIONS, UPDATED BASED ON 2010 GROUND RECONNAISSANCE, AND RECOMMENDED ACTIONS PROPOSED BISON PIPELINE

Milepost	Hazard ID Number	Location Number from 2009 Study (Golder 2009a)	Approximate Size of Feature	Landslide Hazard Conditions	Mitigation Plan
277.7	62-QlsA(s)	9	NA	Not a landslide, based on 2010 site visit observations.	No landslide mitigation needed.
282.2	66-QlsA(e)	10		Poorly-defined depositional area for shallow potentially active landslide located within proposed ROW and about 20 feet east of proposed centerline. The landslide is about 80 feet wide, 100 feet long, and is likely 10 feet deep or less. Surface erosion is present at this location. See Figure 10-1.	Use backhoe trenching to determine depth of slope debris. Results of the trenching will determine the required burial depth of the pipe. Site specific hydrotechnical engineering investigations and analysis may be required to characterize site conditions and develop corresponding designs to capture and convey surface run-off along the ROW and for trench drainage flows. Refer to Appendix B for typical examples. Lay back slope along ROW to 3H:1V. Use proper surface water controls (water bars etc.) on completed slope. Conduct annual visual monitoring.

FIGURES

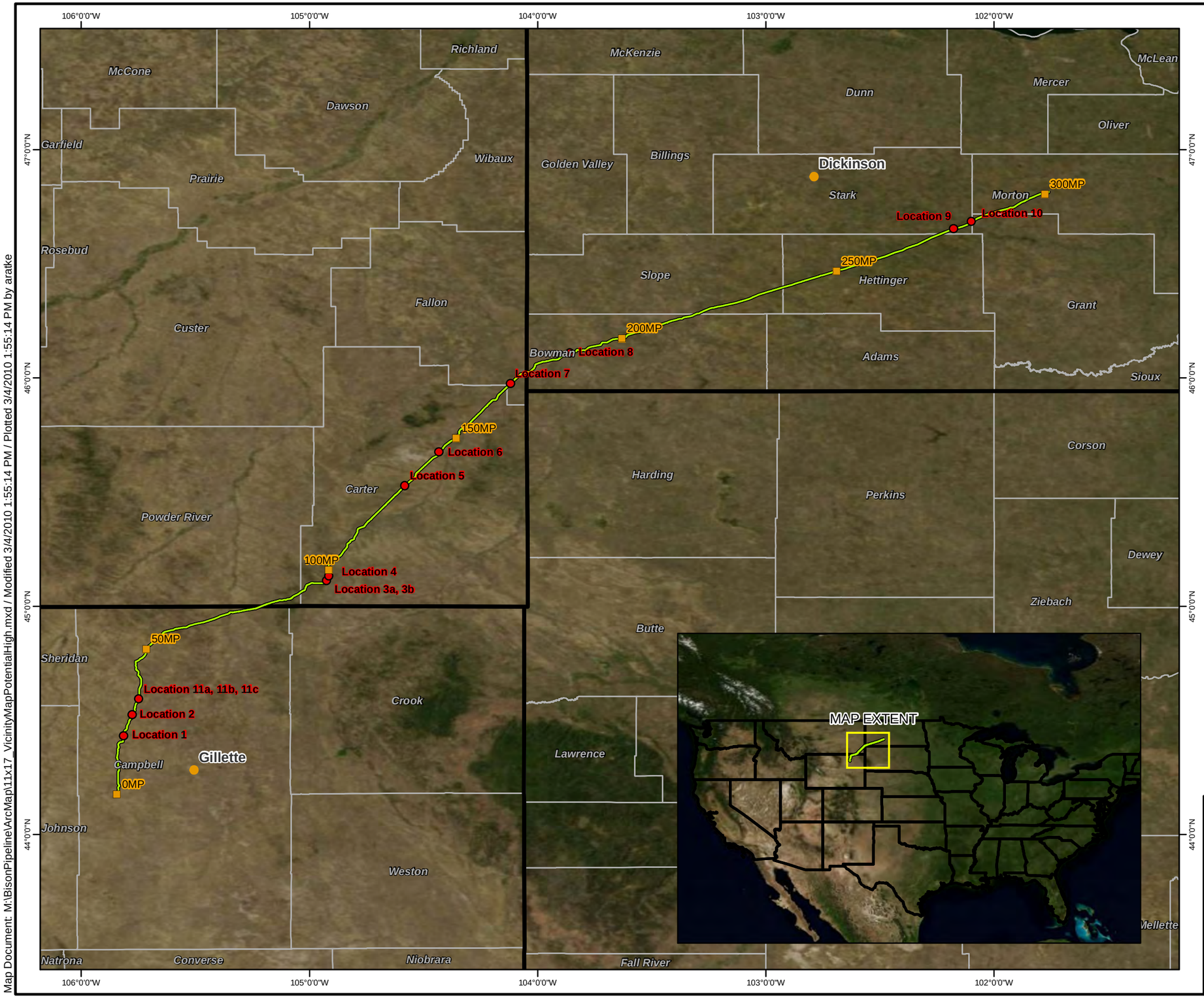

LEGEND

- City
- 50 MP Marker
- Potential Landslide Hazard Location
- Proposed Bison Pipeline (LV17)
- State Boundary
- County Boundary

REFERENCES

USGS. Various dates. Topo Quad (7.5') drawn from National Geographic TOPO! 4.0 [software] 2005:
Projection: WGS84.

30 15 0 30 MILES

SCALE 1:1,900,000 1 INCH = 30 MILES
WHEN PRODUCED AT SIZE 11X17IN

N

PROJECT

AMEC PARAGON
BISON PIPELINE PROJECT
MONTANA, NORTH DAKOTA, WYOMING

TITLE

POTENTIAL HIGH-SUSCEPTIBILITY LANDSLIDE HAZARD LOCATIONS

Golder Associates
Denver, Colorado

PROJECT No.		093-81716	FILE No. 11x17_VicinityMapPotentialHigh.mxd	
DESIGN	JD	02/17/2010	SCALE AS SHOWN	REV 0
GIS	AR	02/17/2010		
CHECK	MQ	02/17/2010	FIGURE 1-0	
REVIEW	JN	02/17/2010		

Map Document: M:\BisonPipeline\ArcMap\11x17_VicinityMapPotentialHigh.mxd / Modified 3/4/2010 1:55:14 PM / Plotted 3/4/2010 1:55:14 PM by aratke

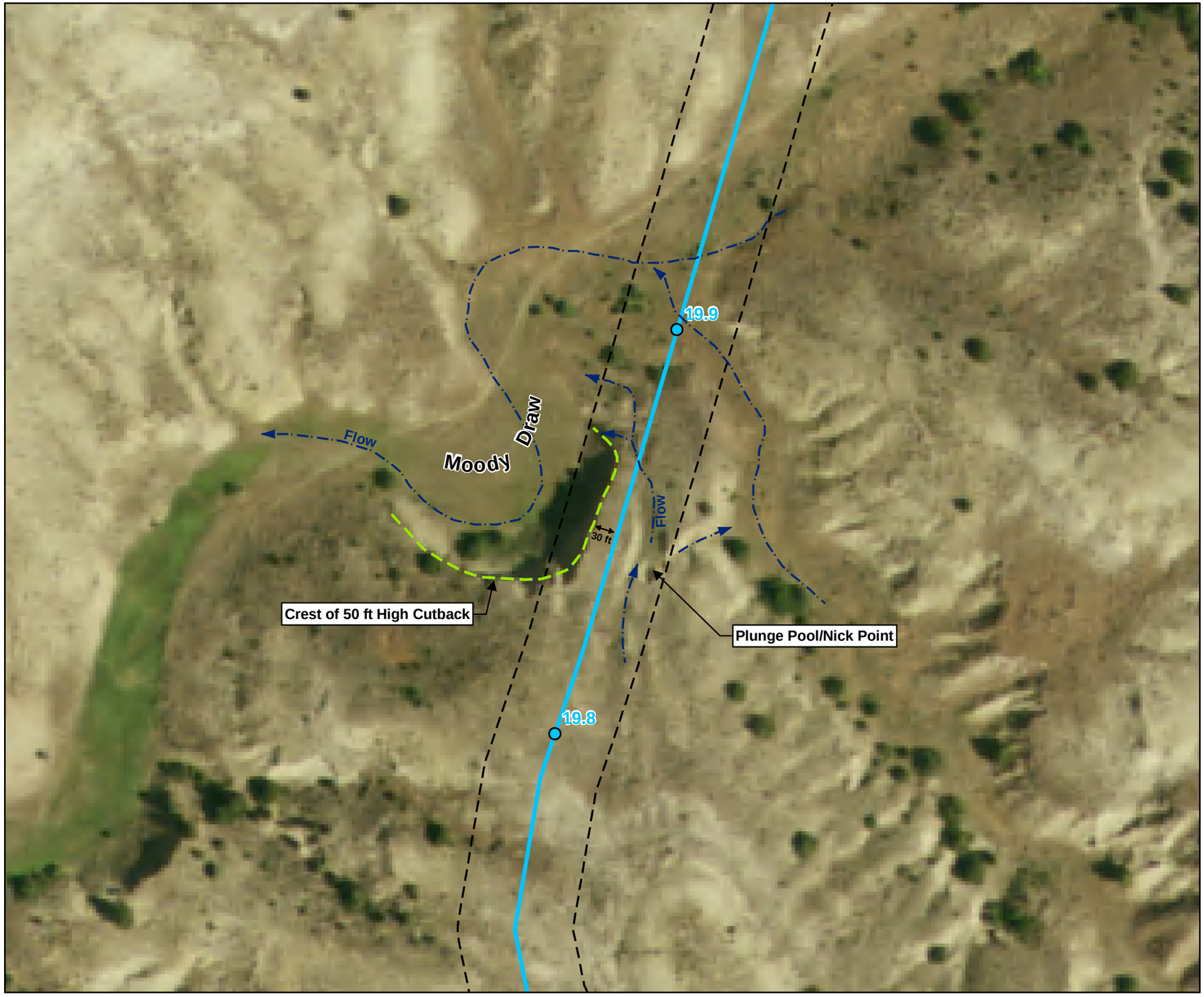

LEGEND

- Milepost Marker
- Bison Pipeline (Lv 17 Proposed Route)
- Possible Alternate Route
- Landslide Direction of Movement
- Ephemeral Stream with Direction of Flow
- Perennial River with Direction of Flow
- Proposed ROW (110 ft wide)

Landslide Classification

- Active (less than 50 yrs old)
- Potentially Active (50-1,000 yrs old, or with some uncertainty)
- Dormant (>1,000 yrs old)
- Seepage and Soft Wet Soil
- Small Stream Bank Slump and Erosion

Map Projection:
UTM Zone 13N NAD 1983

Source:
AMEC (alignment),
Golder Associates Inc. (landslide features)

0 100
Scale in Feet

SCALE 1:1,200 1 INCH = 100 FEET
WHEN PRODUCED AT SIZE 11X17IN

N

PROJECT

AMEC PARAGON
BISON PIPELINE PROJECT
CAMPBELL COUNTY, WY

TITLE

LOCATION 1 - MP 19.7 to 19.9

Golder Associates
Denver, Colorado

PROJECT No.		09381716	FILE No. 09381716F21.mxd	
DESIGN	JD	02/11/2010	SCALE AS SHOWN	REV 0
GIS	BVJ	02/12/2010	**FIGURE 1-1**	
CHECK	MRQ	02/17/2010		
REVIEW	JN	02/17/2010		

09381716F21_Location1.mxd | BVANG-JOHNSON | 2/12/2010

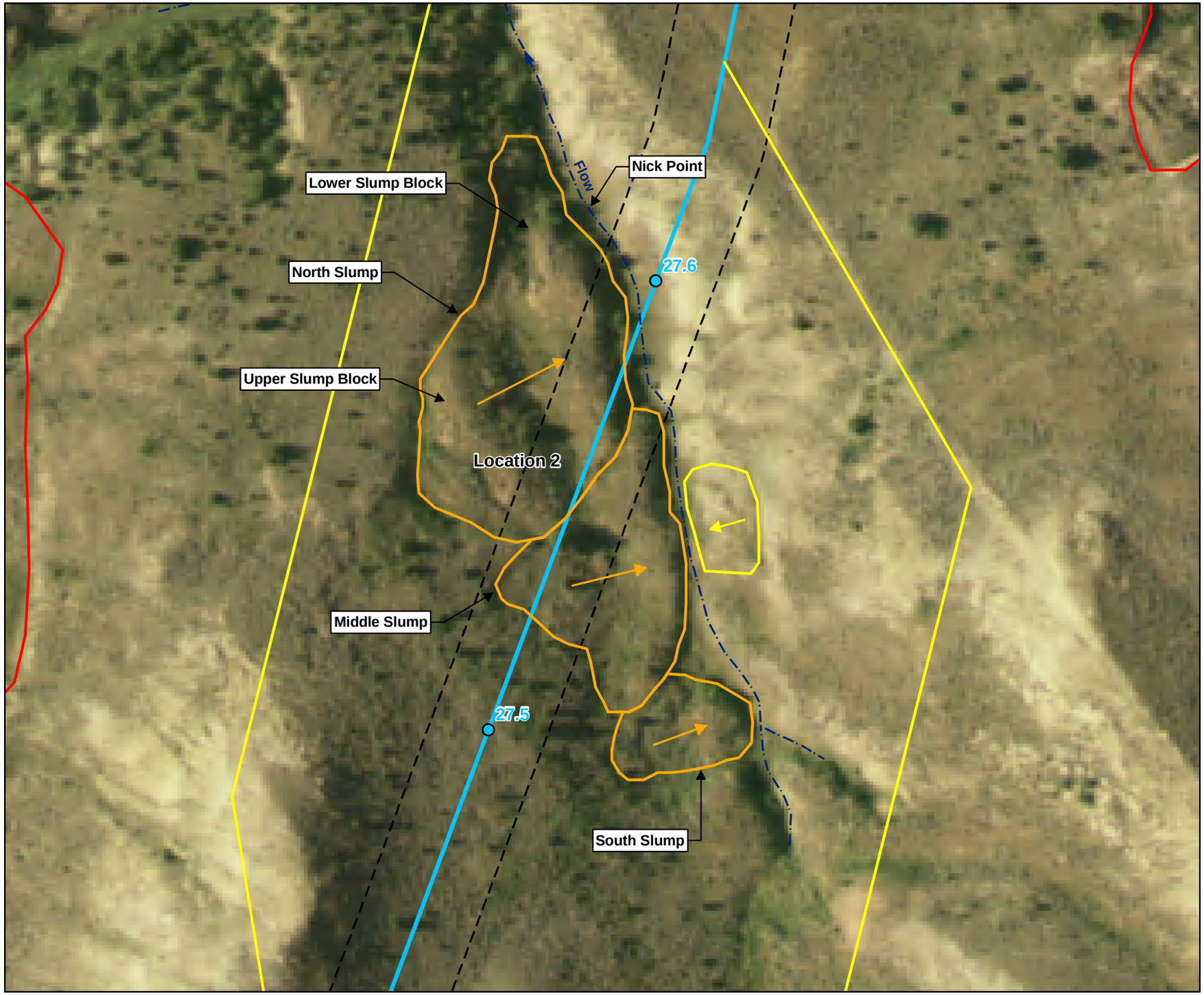

LEGEND

- Milepost Marker
- Bison Pipeline (Lv 17 Proposed Route)
- Possible Alternate Route
- Landslide Direction of Movement
- Ephemeral Stream with Direction of Flow
- Perennial River with Direction of Flow
- Proposed ROW (110 ft wide)

Landslide Classification

- Active (less than 50 yrs old)
- Potentially Active (50-1,000 yrs old, or with some uncertainty)
- Dormant (>1,000 yrs old)
- Seepage and Soft Wet Soil
- Small Stream Bank Slump and Erosion

Map Projection:
UTM Zone 13N NAD 1983
Source:
AMEC (alignment),
Golder Associates Inc. (landslide features)

0 100
Scale in Feet

N

SCALE 1:1,200 1 INCH = 100 FEET
WHEN PRODUCED AT SIZE 11X17IN

PROJECT

AMEC PARAGON
BISON PIPELINE PROJECT
CAMPBELL COUNTY, WY

TITLE

LOCATION 2 - MP 27.5 to 27.6

Golder Associates
Denver, Colorado

PROJECT No.		09381716	FILE No. 09381716F18.mxd	
DESIGN	JD	02/11/2010	SCALE AS SHOWN	REV 0
GIS	BVJ	02/11/2010	**FIGURE 2-1**	
CHECK	MRQ	02/17/2010		
REVIEW	JN	02/17/2010		

09381716F18_Location2.mxd | BVANG-JOHNSON | 2/11/2010

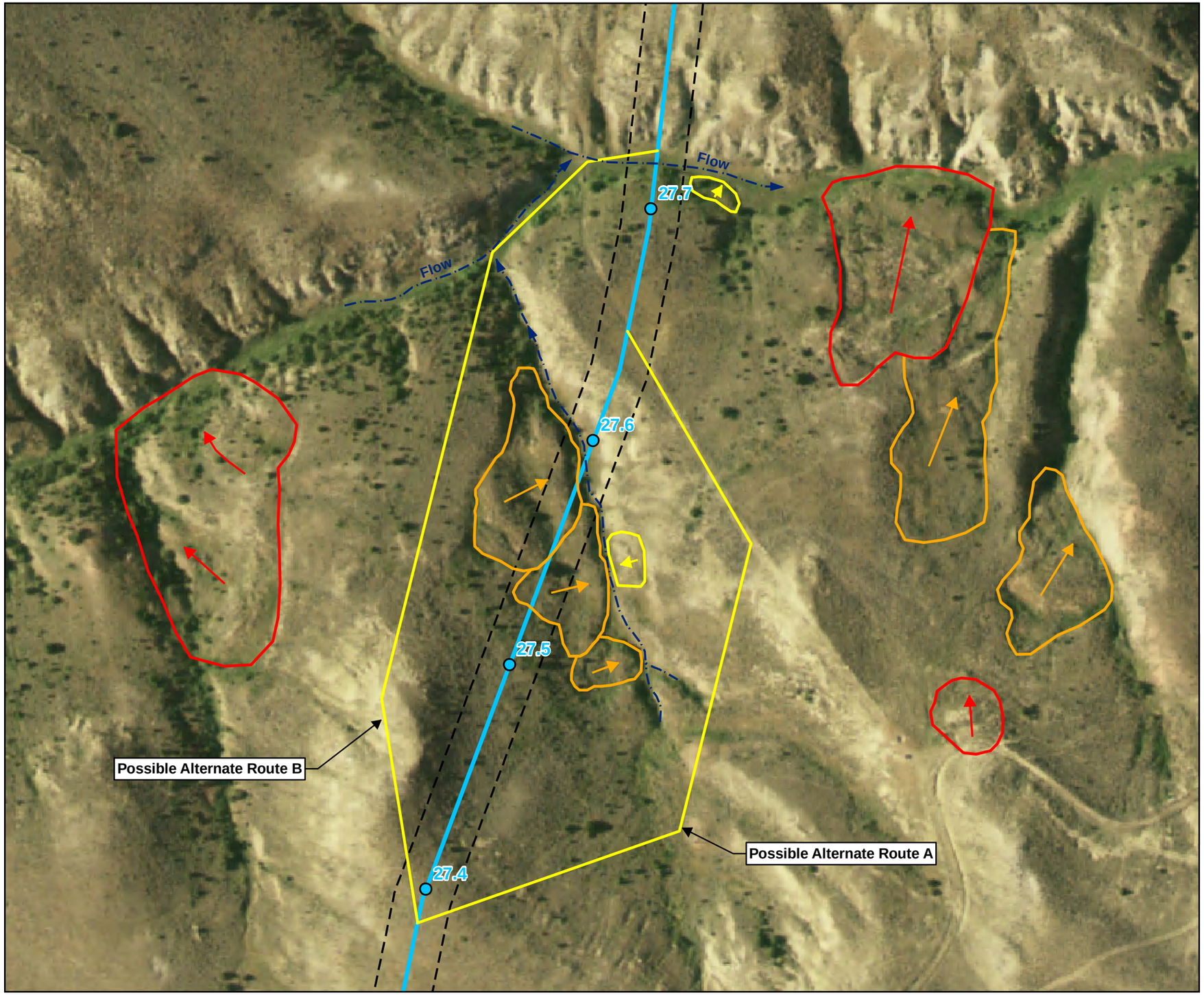

LEGEND

- Milepost Marker
- Bison Pipeline (Lv 17 Proposed Route)
- Possible Alternate Route
- Landslide Direction of Movement
- Ephemeral Stream with Direction of Flow
- Perennial River with Direction of Flow
- Proposed ROW (110 ft wide)

Landslide Classification

- Active (less than 50 yrs old)
- Potentially Active (50-1,000 yrs old, or with some uncertainty)
- Dormant (>1,000 yrs old)
- Seepage and Soft Wet Soil
- Small Stream Bank Slump and Erosion

Map Projection:
UTM Zone 13N NAD 1983
Source:
AMEC (alignment),
Golder Associates Inc. (landslide features)

0 200
Scale in Feet

N

SCALE 1:2,400 1 INCH = 200 FEET
WHEN PRODUCED AT SIZE 11X17IN

PROJECT

AMEC PARAGON
BISON PIPELINE PROJECT
CAMPBELL COUNTY, WY

TITLE

LOCATION 2 - MP 27.5 to 27.6

Golder Associates
Denver, Colorado

PROJECT No.		09381716	FILE No. 09381716F17.mxd	
DESIGN	JD	02/11/2010	SCALE AS SHOWN	REV 0
GIS	BVJ	02/11/2010	**FIGURE 2-2**	
CHECK	MRQ	02/17/2010		
REVIEW	JN	02/17/2010		

09381716F17_Location2.mxd | BVANG-JOHNSON | 2/11/2010

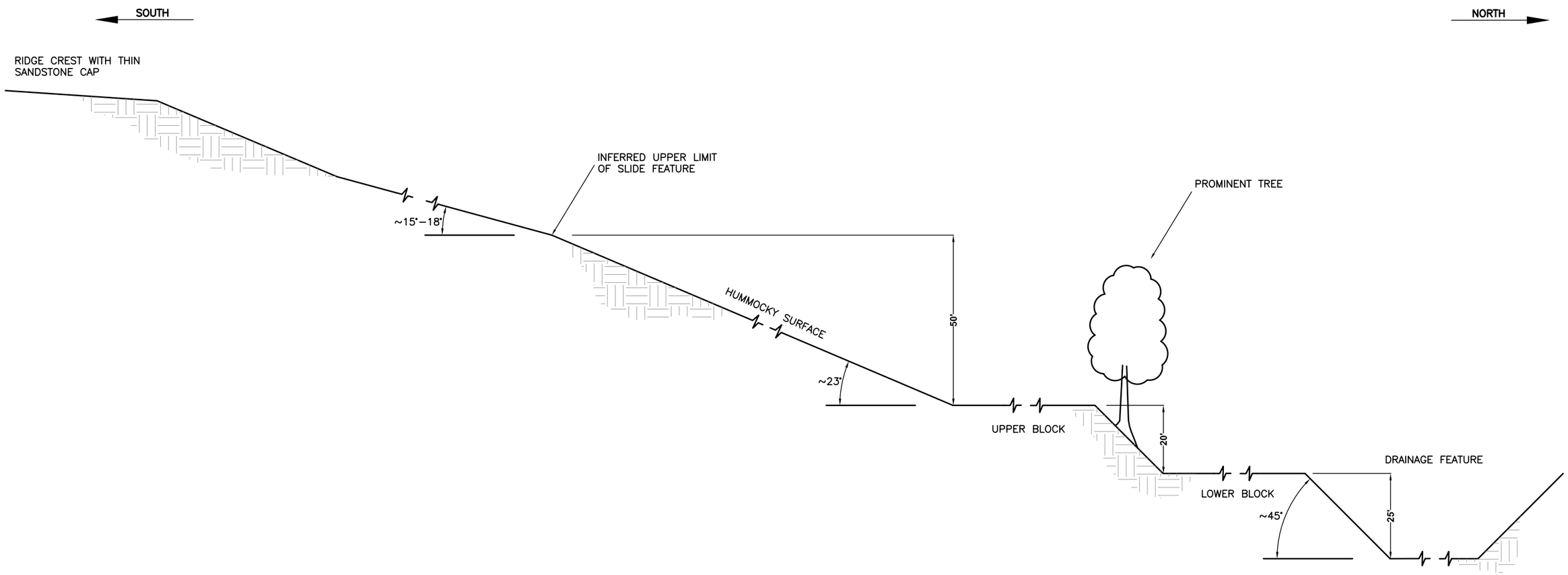

NOTES

1. MAGNITUDE OF BLOCK STEPS IS GREATER (APPROXIMATELY 30 TO 40 FEET) NORTH OF MARKED PIPELINE CENTER LINE.
2. PROFILE ALONG PIPE CENTER LINE IS OBLIQUE TO FALL LINE OF SLOPE AND APPARENT LANDSLIDE MOVEMENT DIRECTION.
3. CONCEPTUAL SKETCH BASED ON FIELD OBSERVATIONS FROM SITE VISIT PERFORMED FEBRUARY 3, 2010.

REV	DATE	DES	REVISION DESCRIPTION	CADD	CHK	RVW

PROJECT

AMEC PARAGON
BISON PIPELINE PROJECT
CAMPBELL COUNTY, WY

TITLE

PROFILE ALONG PROPOSED PIPE CENTER LINE AT LOCATION 2 - MP 27.5

Golder Associates
DENVER, COLORADO

PROJECT No.		093-81716	FILE No.	09381716A033
DESIGN	NCD	02/07/10	SCALE N.T.S.	REV. 0
CADD	MRQ	02/19/10		
CHECK	NCD	02/19/10	**FIGURE 2-3**	
REVIEW	JN	02/19/10		

Plot Time: 03/05/10 08:47

Dwg Name: N:\09\093-81716_A_ PIPELINE\09381716A033.dwg
Layout Name: 11x17 Landscape Machine: DEN1-L-MQUEVEDO
Last Update: Mar 05, 2010 08:46 By: MQuevedo
Last Plot: Mar 05, 2010 08:47 By: MQuevedo

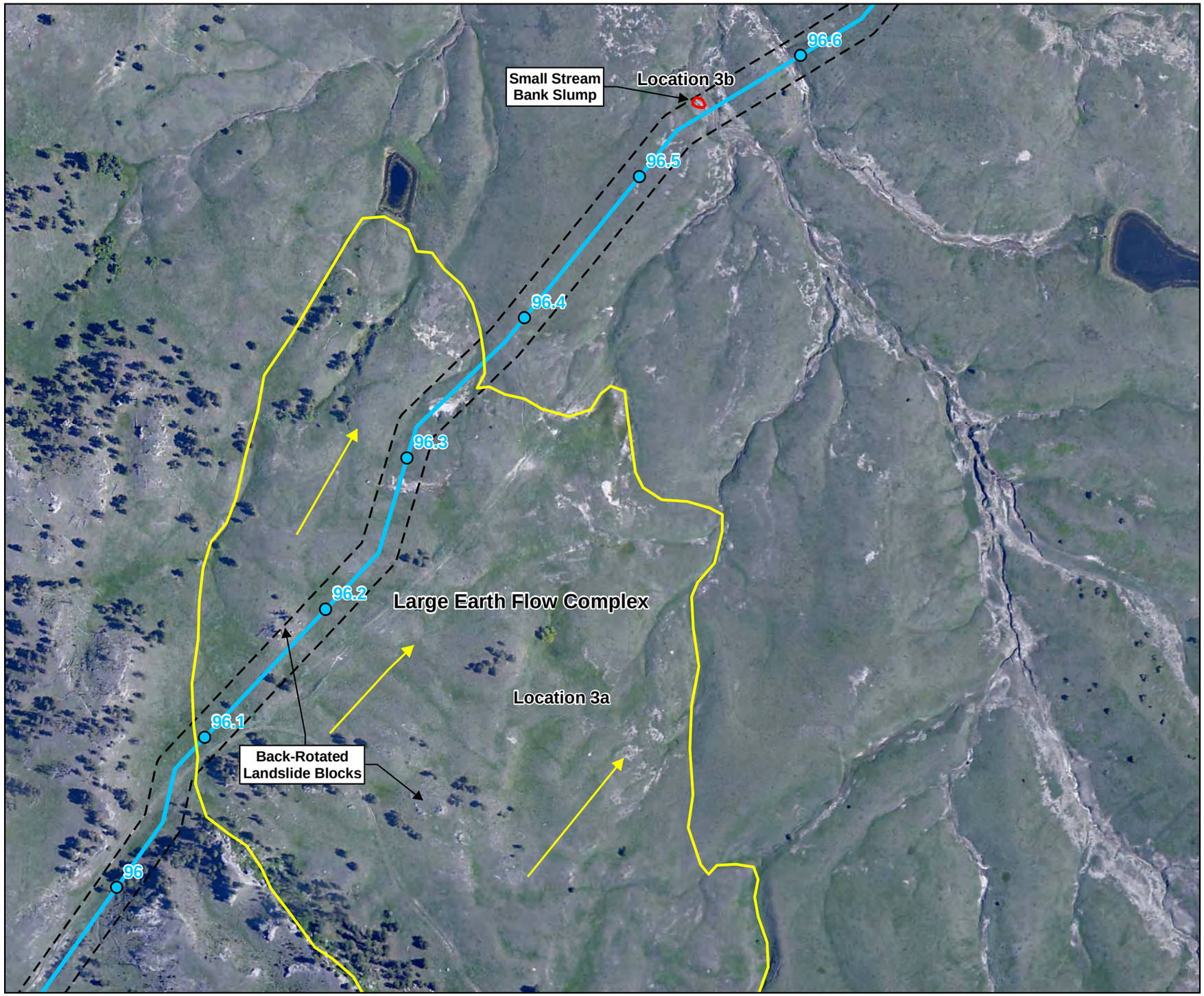

LEGEND

- Milepost Marker
- Bison Pipeline (Lv 17 Proposed Route)
- Possible Alternate Route
- Landslide Direction of Movement
- Ephemeral Stream with Direction of Flow
- Perennial River with Direction of Flow
- Proposed ROW (110 ft wide)

Landslide Classification

- Active (less than 50 yrs old)
- Potentially Active (50-1,000 yrs old, or with some uncertainty)
- Dormant (>1,000 yrs old)
- Seepage and Soft Wet Soil
- Small Stream Bank Slump and Erosion

Map Projection:
UTM Zone 13N NAD 1983
Source:
AMEC (alignment),
Golder Associates Inc. (landslide features)

0 300
Scale in Feet

N

SCALE 1:3,600 1 INCH = 300 FEET
WHEN PRODUCED AT SIZE 11X17IN

PROJECT

AMEC PARAGON
BISON PIPELINE PROJECT
CARTER COUNTY, MT

TITLE

LOCATION 3a AND 3b -
MP 96.0 to 96.6

Golder Associates
Denver, Colorado

PROJECT No.		09381716	FILE No. 09381716F20.mxd	
DESIGN	JD	02/11/2010	SCALE AS SHOWN	REV 0
GIS	BVJ	02/11/2010	**FIGURE 3-1**	
CHECK	MRQ	02/17/2010		
REVIEW	JN	02/17/2010		

09381716F20_Location3ab.mxd | BVANG-JOHNSON | 2/11/2010

LEGEND

- Milepost Marker
- Bison Pipeline (Lv 17 Proposed Route)
- Possible Alternate Route
- Landslide Direction of Movement
- Ephemeral Stream with Direction of Flow
- Perennial River with Direction of Flow
- Proposed ROW (110 ft wide)

Landslide Classification

- Active (less than 50 yrs old)
- Potentially Active (50-1,000 yrs old, or with some uncertainty)
- Dormant (>1,000 yrs old)
- Seepage and Soft Wet Soil
- Small Stream Bank Slump and Erosion

Map Projection:
UTM Zone 13N NAD 1983
Source:
AMEC (alignment),
Golder Associates Inc. (landslide features)

0 50
Scale in Feet

N

SCALE 1:600 1 INCH = 50 FEET
WHEN PRODUCED AT SIZE 11X17IN

PROJECT

AMEC PARAGON
BISON PIPELINE PROJECT
CARTER COUNTY, MT

TITLE

LOCATION 5 - MP 131.6

Golder Associates
Denver, Colorado

PROJECT No.	09381716		FILE No. 09381716F22.mxd	
DESIGN	JD	02/11/2010	SCALE AS SHOWN	REV 0
GIS	BVJ	02/12/2010	**FIGURE 5-1**	
CHECK	MRQ	02/17/2010		
REVIEW	JN	02/17/2010		

09381716F22_Location5.mxd | BVANG-JOHNSON | 2/12/2010

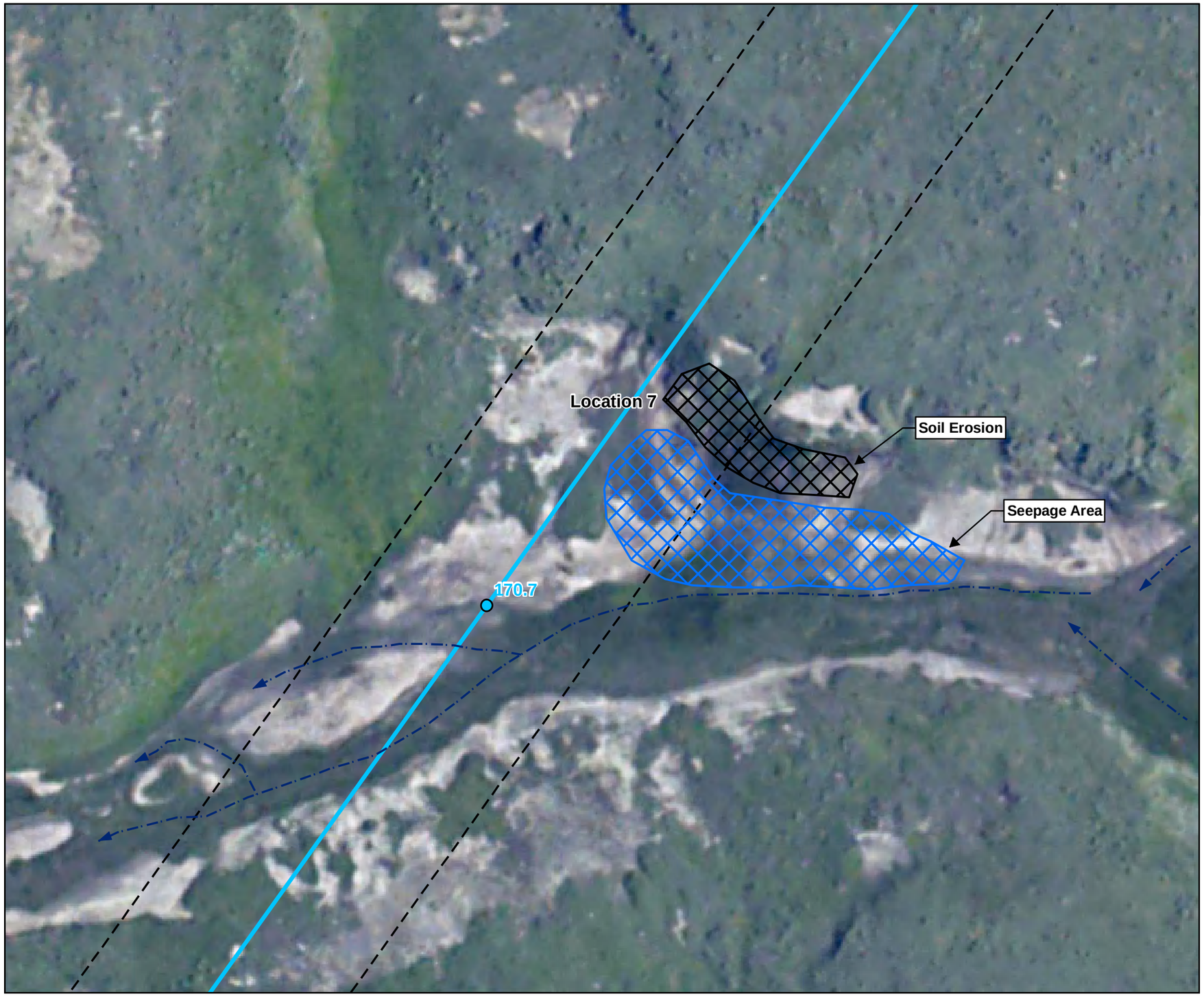

LEGEND

- Milepost Marker
- Bison Pipeline (Lv 17 Proposed Route)
- Possible Alternate Route
- Landslide Direction of Movement
- Ephemeral Stream with Direction of Flow
- Perennial River with Direction of Flow
- Proposed ROW (110 ft wide)

Landslide Classification

- Active (less than 50 yrs old)
- Potentially Active (50-1,000 yrs old, or with some uncertainty)
- Dormant (>1,000 yrs old)
- Seepage and Soft Wet Soil
- Small Stream Bank Slump and Erosion

Map Projection:
UTM Zone 13N NAD 1983
Source:
AMEC (alignment),
Golder Associates Inc. (landslide features)

0 50
Scale in Feet

N

SCALE 1:600 1 INCH = 50 FEET
WHEN PRODUCED AT SIZE 11X17IN

PROJECT

AMEC PARAGON
BISON PIPELINE PROJECT
FALLON COUNTY, MT

TITLE

LOCATION 7 - MP 170.7

Golder Associates
Denver, Colorado

PROJECT No.		09381716	FILE No. 09381716F23.mxd	
DESIGN	JD	02/11/2010	SCALE AS SHOWN	REV 0
GIS	BVJ	02/12/2010	**FIGURE 7-1**	
CHECK	MRQ	02/17/2010		
REVIEW	JN	02/17/2010		

09381716F23_Location7.mxd | BVANG-JOHNSON | 2/12/2010

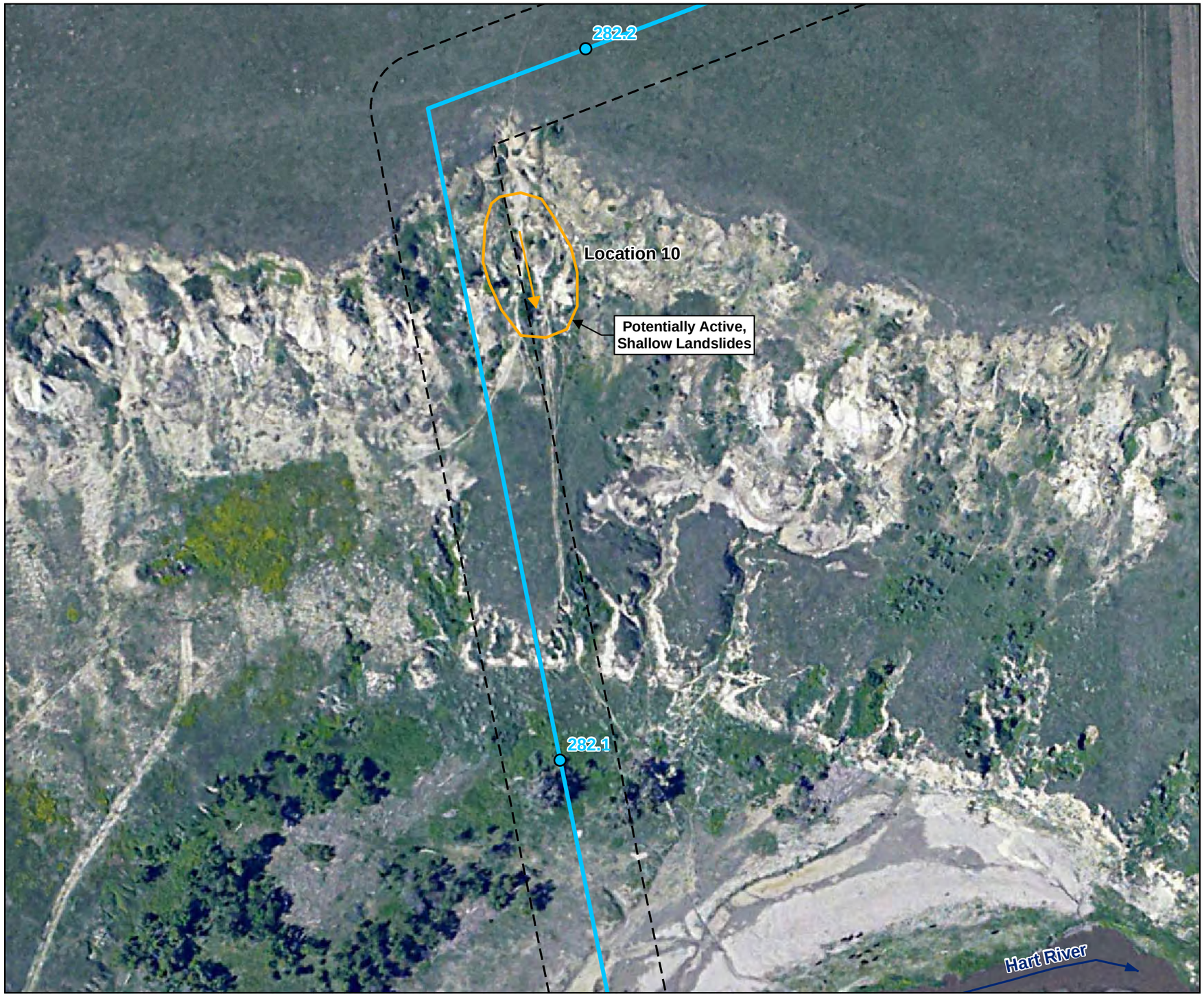

LEGEND

- Milepost Marker
- Bison Pipeline (Lv 17 Proposed Route)
- Possible Alternate Route
- Landslide Direction of Movement
- Ephemeral Stream with Direction of Flow
- Perennial River with Direction of Flow
- Proposed ROW (110 ft wide)

Landslide Classification

- Active (less than 50 yrs old)
- Potentially Active (50-1,000 yrs old, or with some uncertainty)
- Dormant (>1,000 yrs old)
- Seepage and Soft Wet Soil
- Small Stream Bank Slump and Erosion

Map Projection:
UTM Zone 13N NAD 1983
Source:
AMEC (alignment),
Golder Associates Inc. (landslide features)

0 100
Scale in Feet

N

SCALE 1:1,200 1 INCH = 100 FEET
WHEN PRODUCED AT SIZE 11X17IN

PROJECT

AMEC PARAGON
BISON PIPELINE PROJECT
STARK COUNTY, ND

TITLE

LOCATION 10 - MP 282.1 to 282.2

Golder Associates
Denver, Colorado

PROJECT No.		09381716	FILE No. 09381716F24.mxd	
DESIGN	JD	02/11/2010	SCALE AS SHOWN	REV 0
GIS	BVJ	02/12/2010	**FIGURE 10-1**	
CHECK	MRQ	02/17/2010		
REVIEW	JN	02/17/2010		

09381716F24_Location10.mxd | BVANG-JOHNSON | 2/12/2010

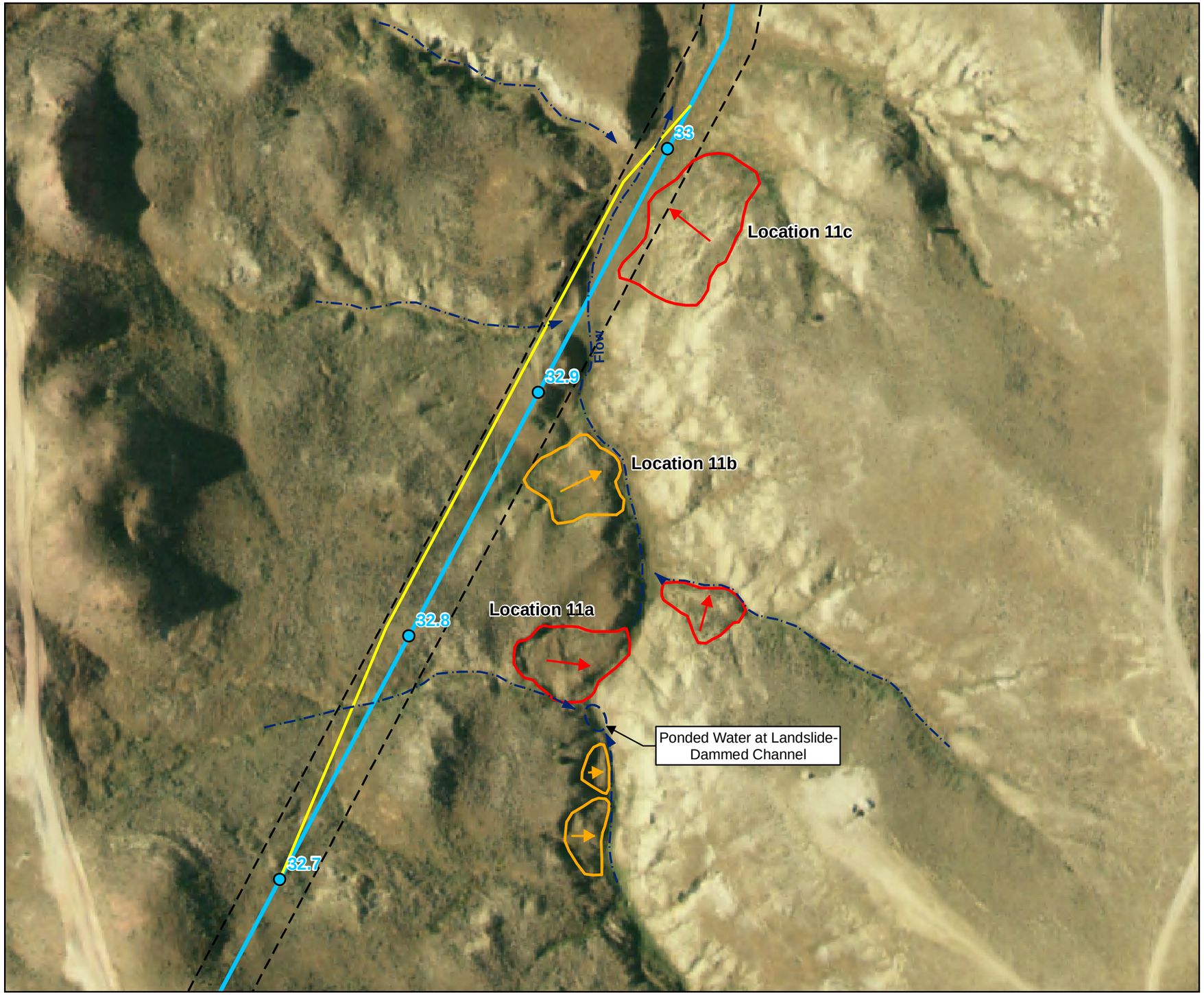

LEGEND

- Milepost Marker
- Bison Pipeline (Lv 17 Proposed Route)
- Possible Alternate Route
- Landslide Direction of Movement
- Ephemeral Stream with Direction of Flow
- Perennial River with Direction of Flow
- Proposed ROW (110 ft wide)

Landslide Classification

- Active (less than 50 yrs old)
- Potentially Active (50-1,000 yrs old, or with some uncertainty)
- Dormant (>1,000 yrs old)
- Seepage and Soft Wet Soil
- Small Stream Bank Slump and Erosion

Map Projection:
UTM Zone 13N NAD 1983
Source:
AMEC (alignment),
Golder Associates Inc. (landslide features)

0 200
Scale in Feet

N

SCALE 1:2,400 1 INCH = 200 FEET
WHEN PRODUCED AT SIZE 11X17IN

PROJECT

AMEC PARAGON
BISON PIPELINE PROJECT
CAMPBELL COUNTY, WY

TITLE

LOCATION 11a-c - MP 32.7 to 33.0

Golder Associates
Denver, Colorado

PROJECT No.		09381716	FILE No. 09381716F19.mxd	
DESIGN	JD	02/11/2010	SCALE AS SHOWN	REV 0
GIS	BVJ	02/11/2010		
CHECK	MRQ	02/17/2010	**FIGURE 11-1**	
REVIEW	JN	02/17/2010		

09381716F19_Location11abc.mxd | BVANG-JOHNSON | 2/11/2010

APPENDIX A
SITE PHOTOGRAPHS

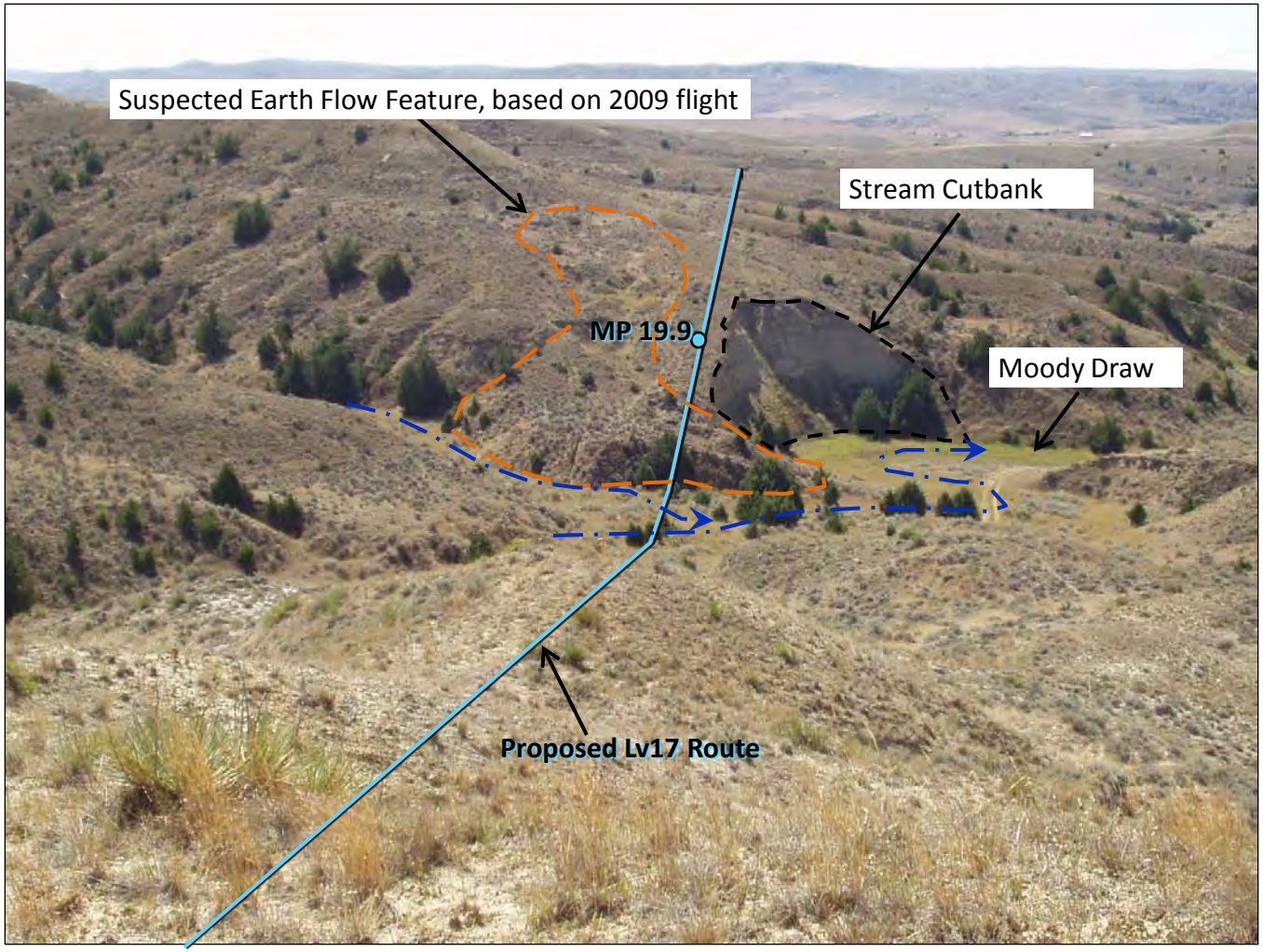

Photo 1-1: Looking south along proposed Bison Pipeline (blue line). The proposed pipeline crosses within 30 feet of a 50-foot-high cliff at the outside bend of the Moody Draw. The area indicated by the orange dashed line was suspected to be an earth flow during the 2009 geologic hazard evaluation but has been reclassified as an erosion area based on the February 2010 study.

Photo 1-2: Looking south and upslope at a plunge pool within an active erosion gully located within the proposed ROW, and located about 40 feet east of the proposed pipeline route at about MP 19.89. The proposed pipeline crosses this erosion gully down slope of this location.

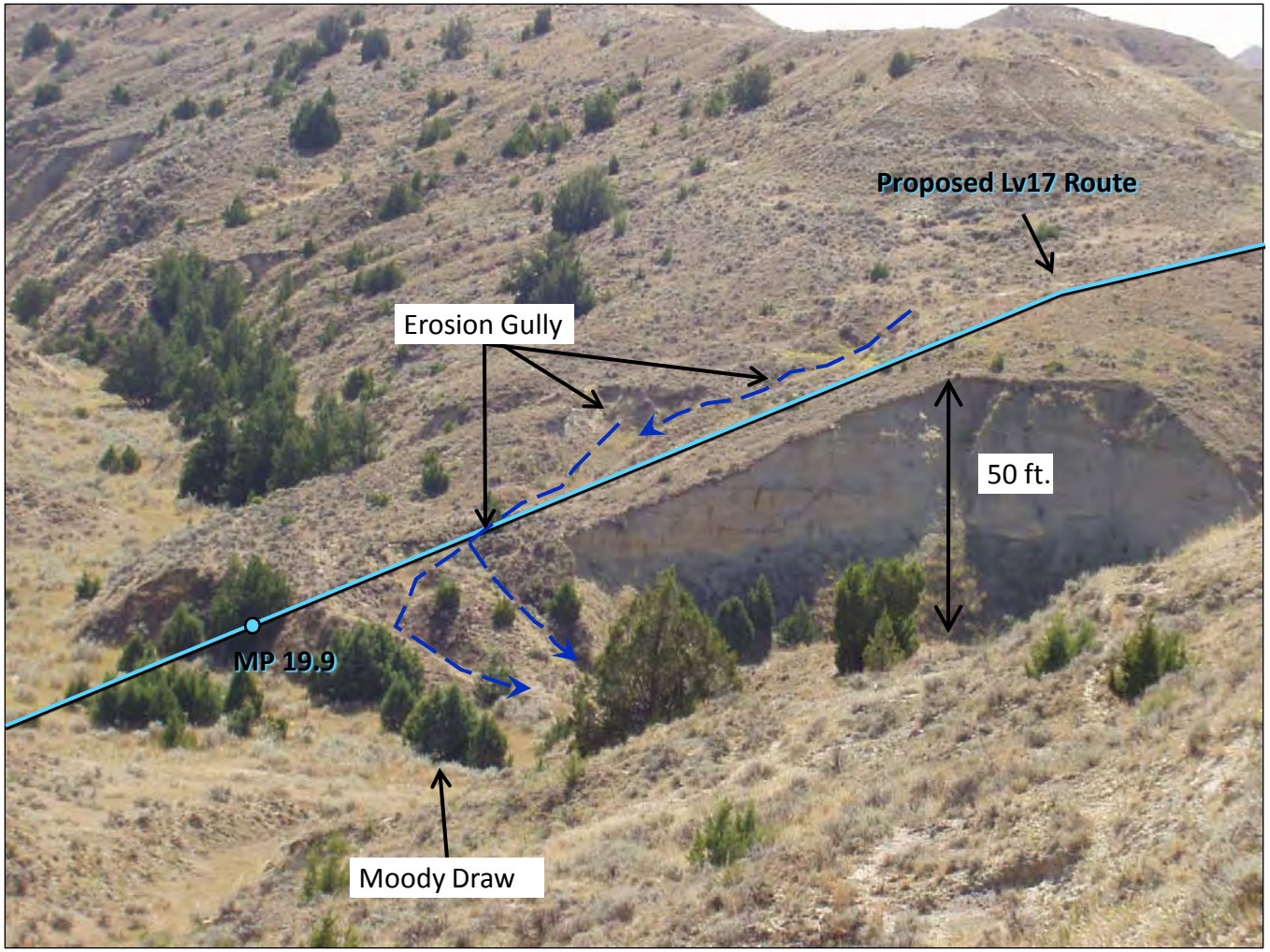

Photo 1-3: Looking southeast at proposed pipeline route where it crosses within 30 feet of the crest of a 50-foot-high cliff at the outside bend of the Moody Draw. The proposed pipeline route crosses an active erosion gully.

Photo 1-4: Looking south along proposed pipeline route where it crosses within 30 feet of a 50-foot-high cliff at an outside bend of Moody Draw.

Photo 1-5: Exposed bedrock of the Wasatch Formation. Here the sandstone bedrock can retain a vertical slope however the bedrock is poorly-cemented, jointed, friable, crumbles easily when disturbed, and is subject to erosion by concentrated water flow such as in a stream channel.

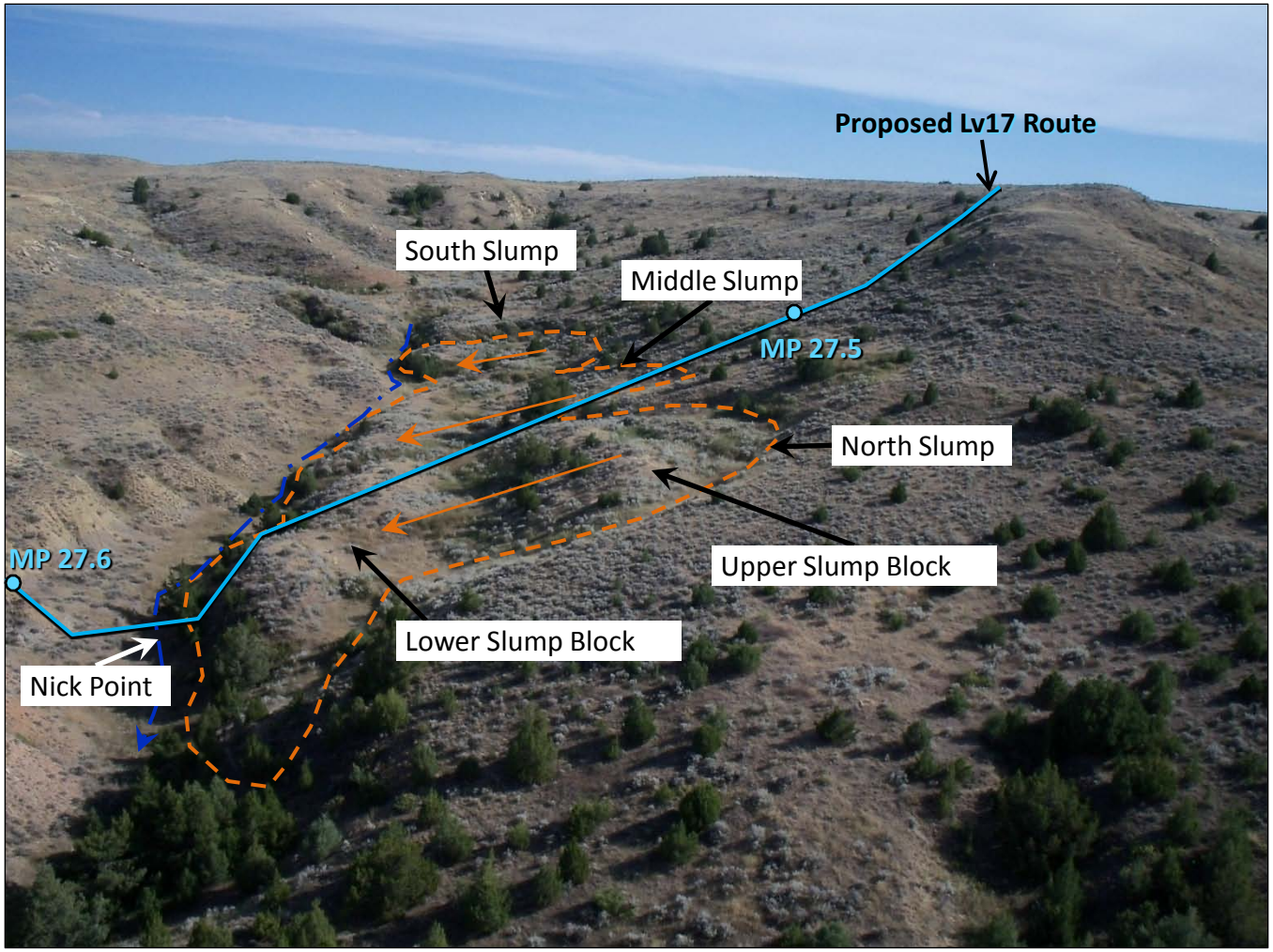

Photo 2-1 : Looking south across proposed pipeline route (blue line) where it descends across a potentially active landslide complex (dashed orange line). The landslide complex is composed of three slump-type landslides, designated the North, South, and Middle Slumps. The North Slump has two, large slump blocks. An un-named, ephemeral stream channel is located at the base of the landslide complex. A 4- to 6-foot-high nick point is located in the stream channel downstream of the proposed pipeline crossing of the channel.

Golder Associates

Photo 2-3: Thinly-bedded siltstone and shale, with scattered more-resistant sandstone layers, characterize the geologic materials in the immediate vicinity of Landslide Location 2 (MP 27.6).

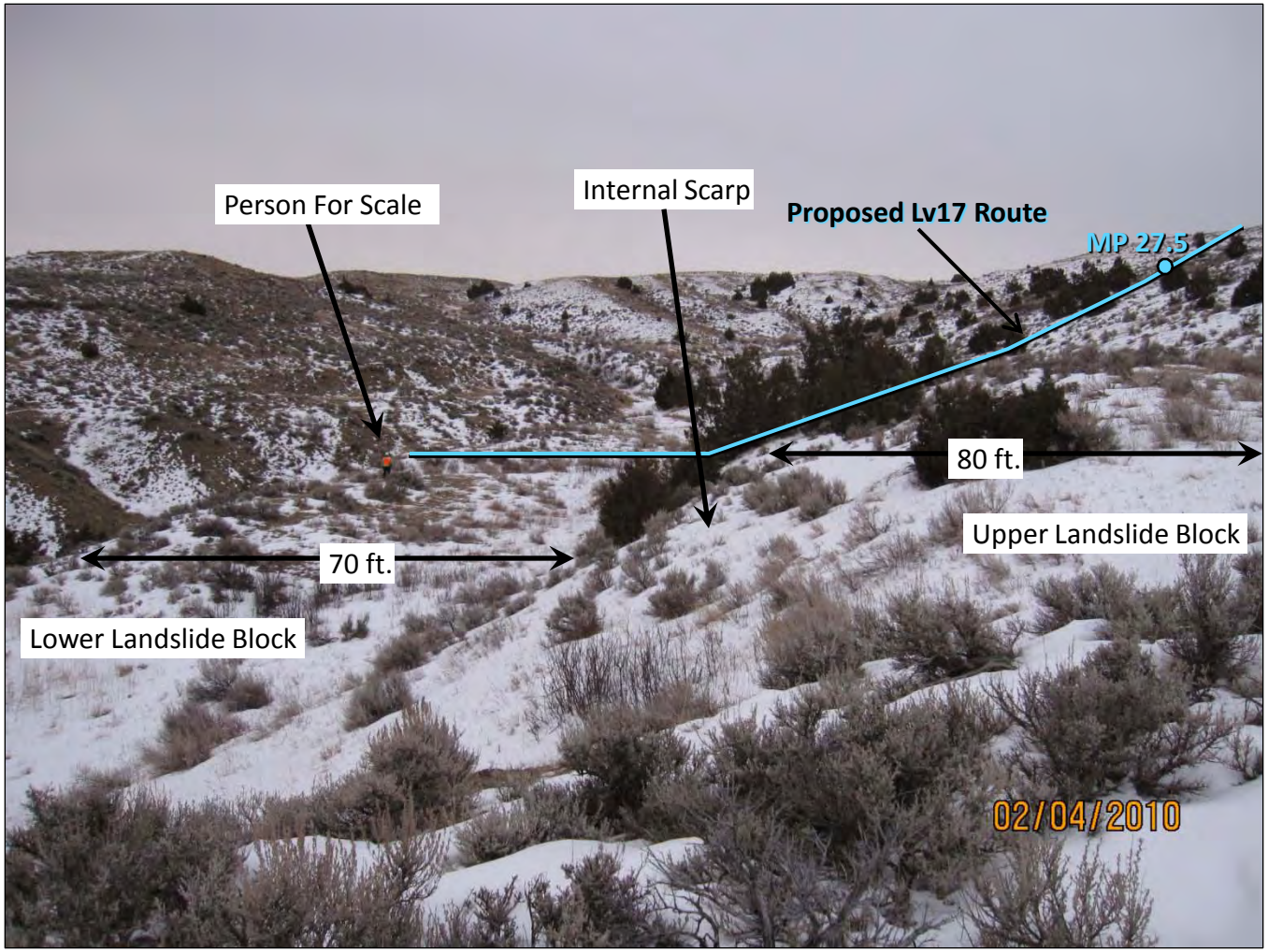

Photo 2-2: Looking south across the lower and upper slump blocks of the North Slump (Location 2). Each of these slump blocks is 70- to 80-feet wide and are separated by an internal shear zone, represented as a steep scarp within the slump feature. Note person for scale.

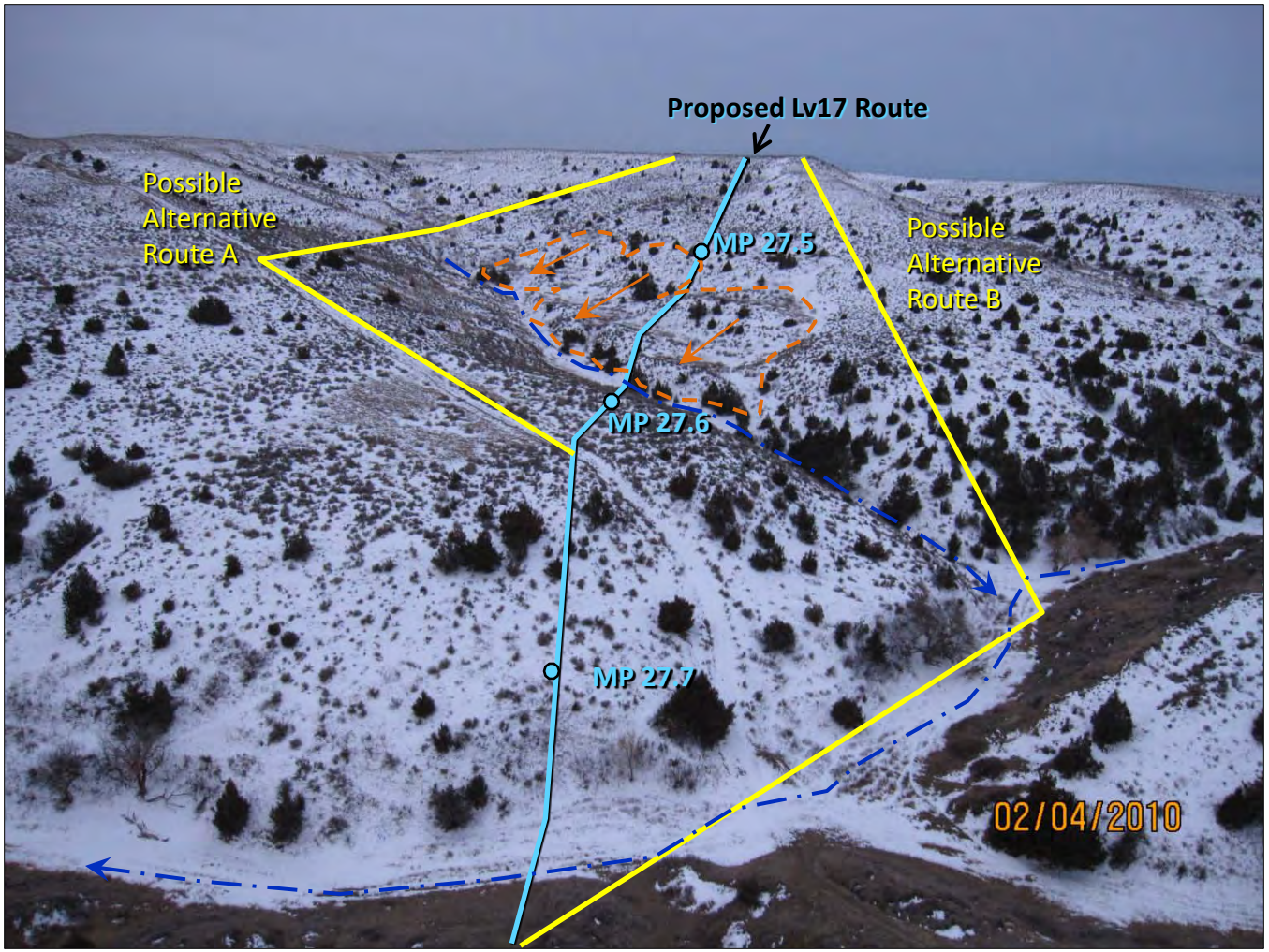

Photo 2-4: Looking roughly south at the Location 2 potentially active landslide complex (MP 27.5 to 27.6), shown as dashed orange line. Two possible alternative routes to avoid the potential landslide hazard are shown as yellow lines.

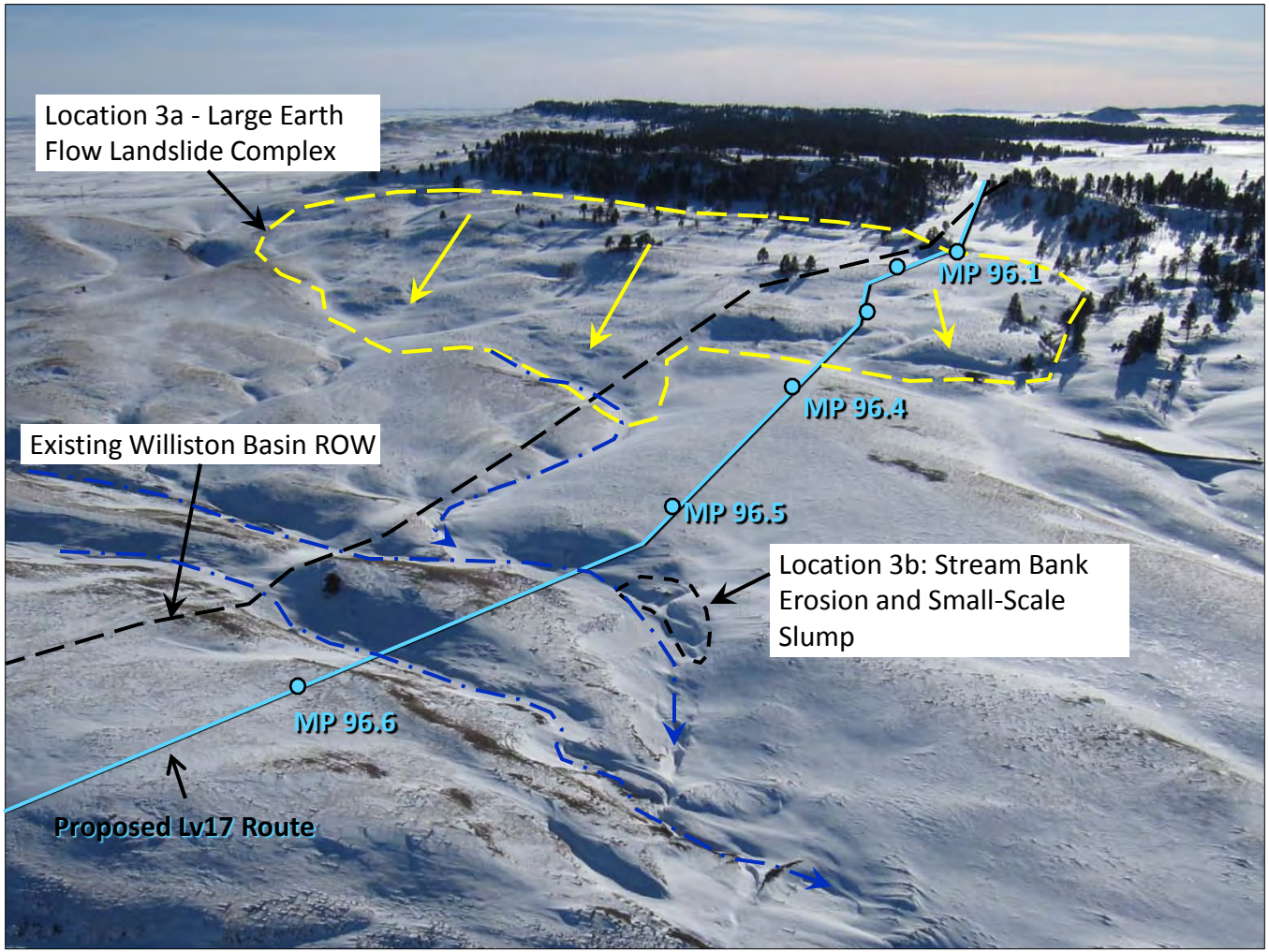

Photo 3-1: Looking roughly south at the proposed pipeline route where it crosses over a large, dormant earth flow complex (Location 3a), and crosses near a small stream bank slump (Location 3b). The black dashed line represents the existing Williston Basin ROW.

Golder Associates

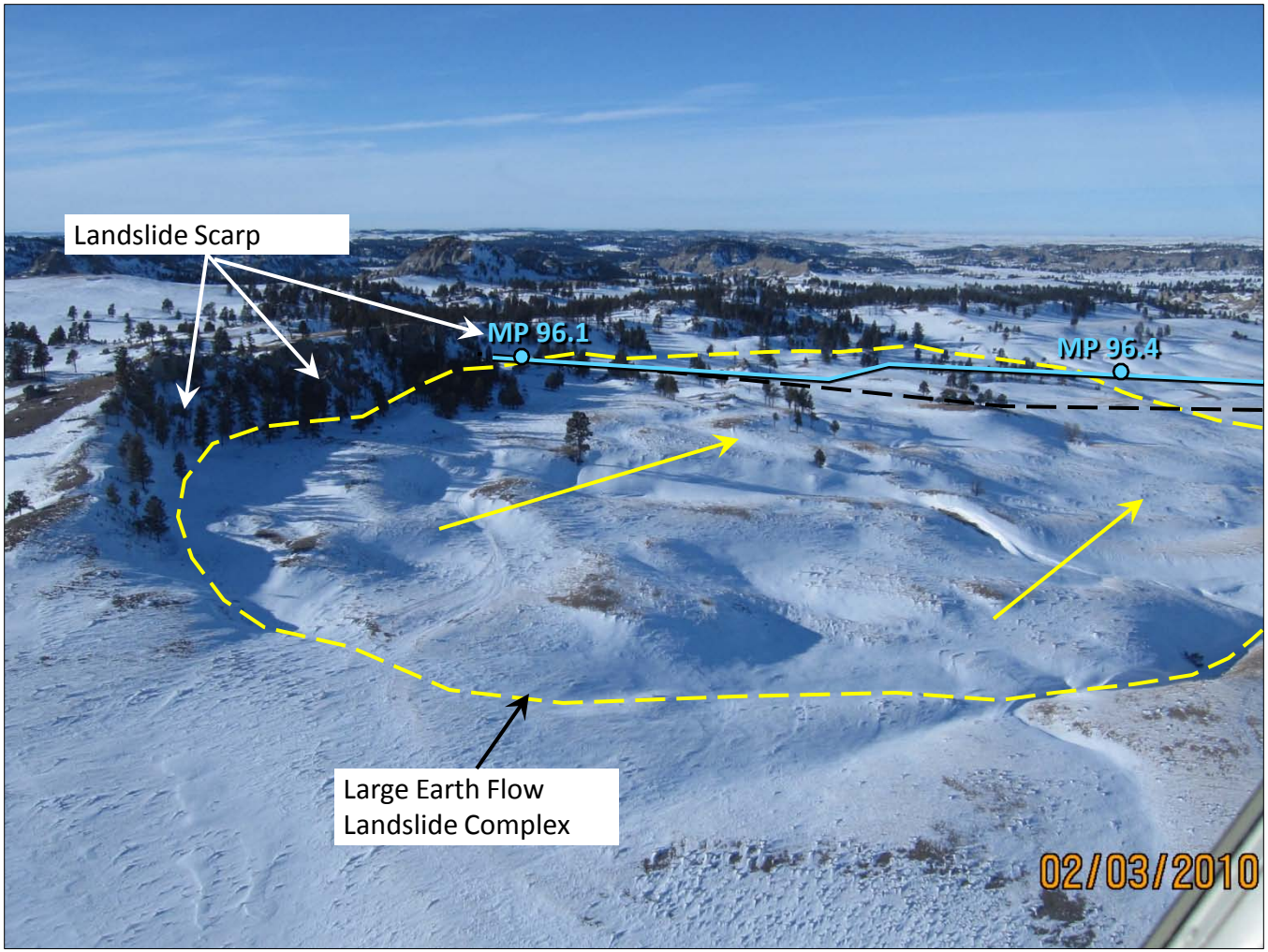

Photo 3-2: Looking northwest at the proposed pipeline route where it crosses over a large, dormant earth flow complex (Location 3a). Note rounded and subdued morphology of the earth flow surface and the 20- to 60-foot high landslide scarp at the upslope (south) boundary of the earth flow complex. The black dashed line represents the existing Williston Basin ROW.

Golder Associates

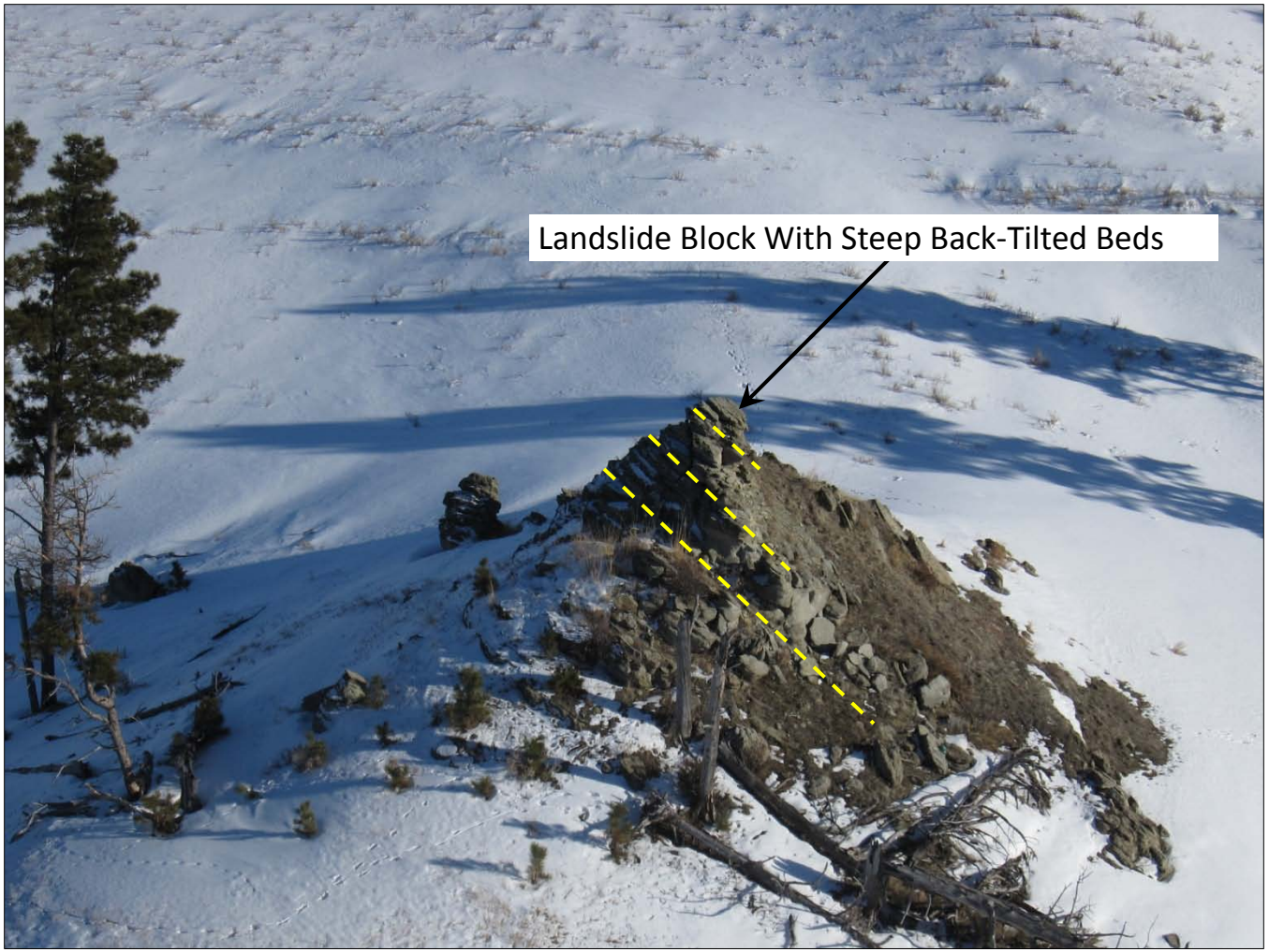

Photo 3-3: Looking southeast at one of several semi-intact landslide blocks observed within the slide mass (location 3a). These blocks appeared to have been "rafted" down slope by the earth flow from the cap rock of the Fox Hills Formation located 200 to 500 feet upslope along the ridge on the southwest side of the feature. The back-tilted nature of the landslide blocks is evidence of landslide movement. The rounded and eroded nature of the blocks suggests that initial movement of the landslide likely occurred more than 1,000 years ago.

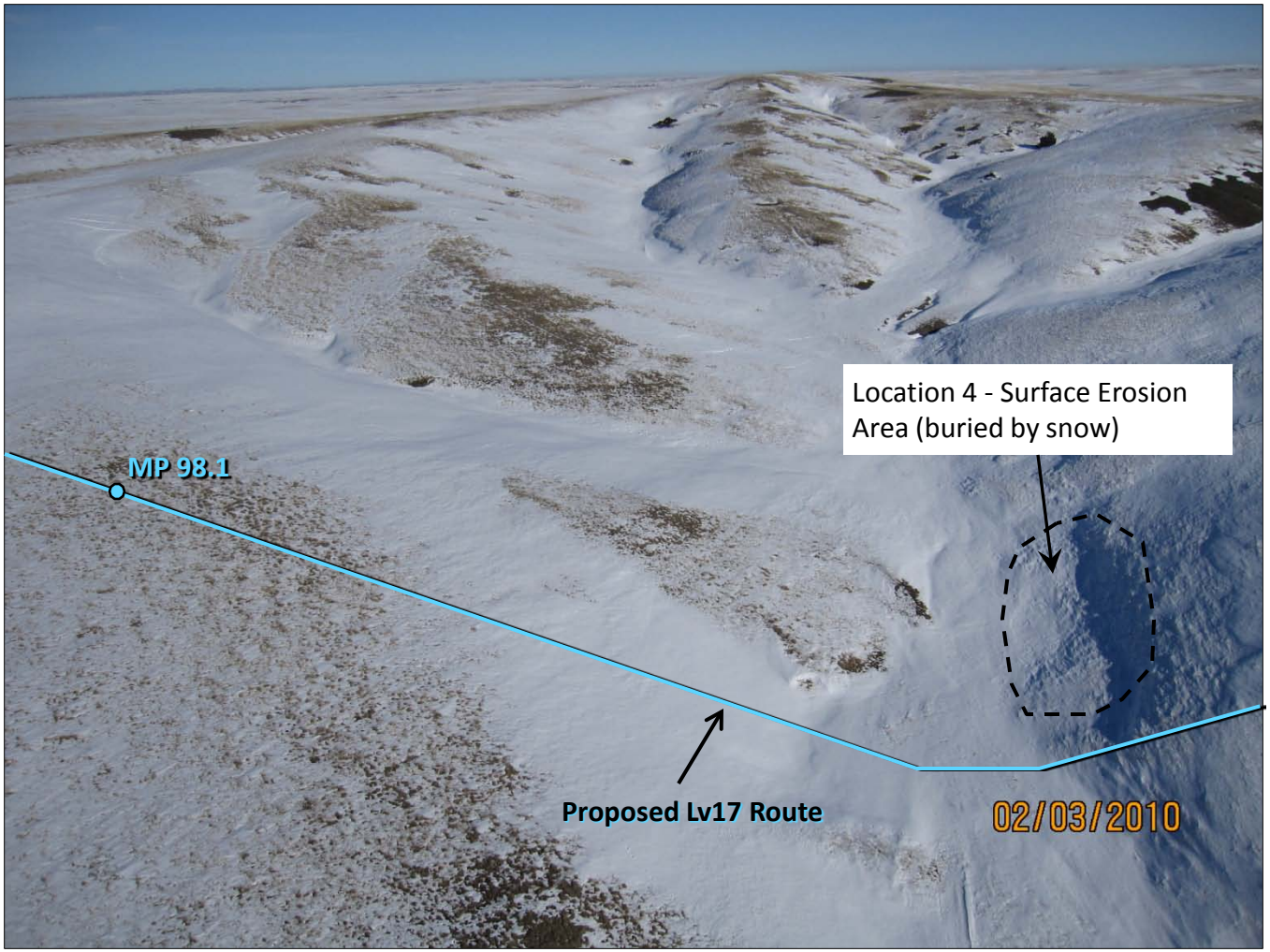

Photo 4-1: Looking east across the proposed pipeline route where it crosses a small drainage channel at Location 4. A possible small slump in the stream bank was identified in the 2009 aerial reconnaissance study at about MP 98.1. During the February 2010 evaluation, this feature was interpreted to be the the result of localized soil erosion and associated vegetation loss adjacent to the stream channel. This feature is no longer considered a high landslide susceptible site.

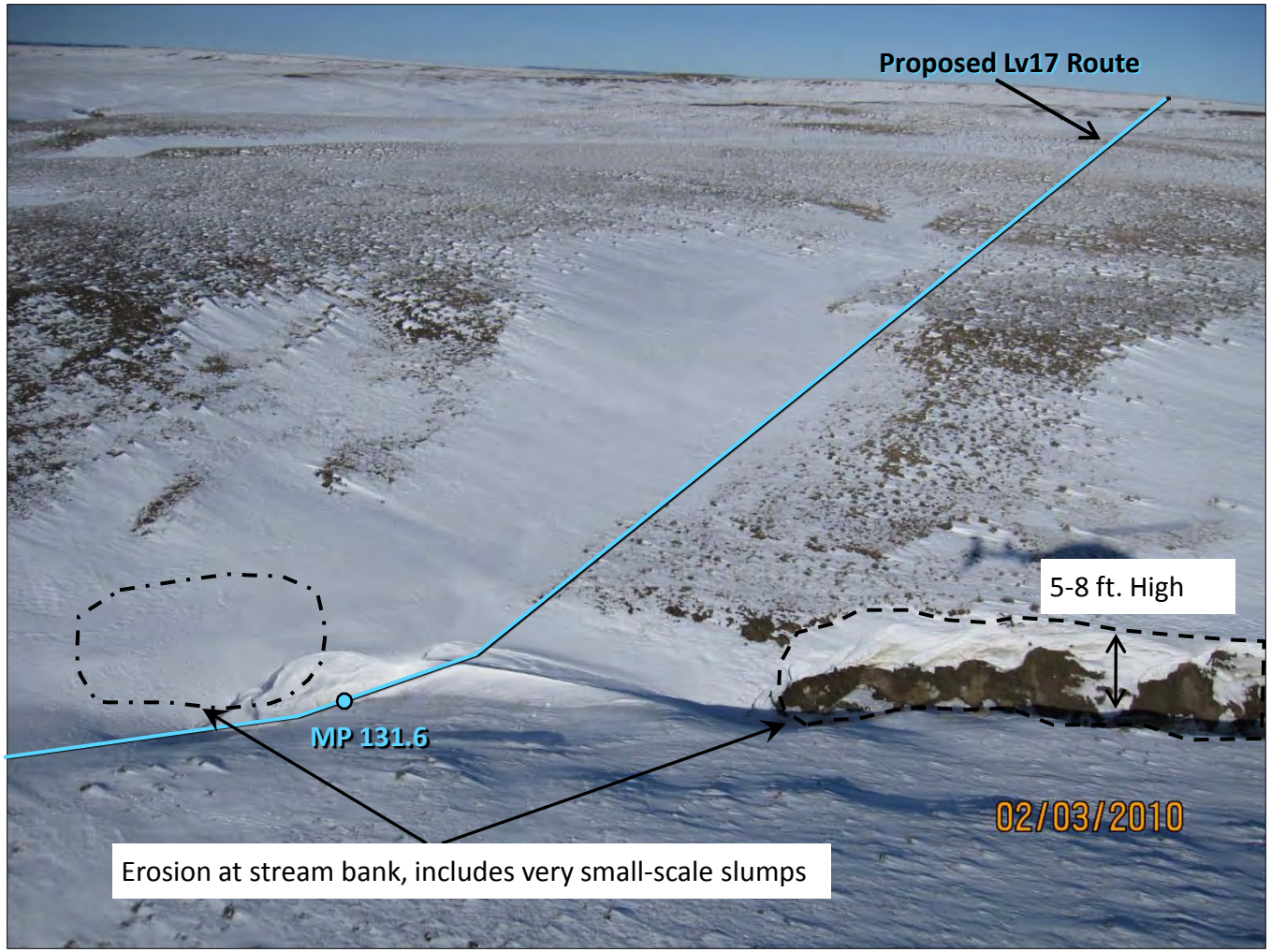

Photo 5-1: Looking north across the proposed pipeline route where it crosses a small drainage channel at MP 131.6 (Location 5). Possible small slumps in the stream bank on either side of the proposed pipeline route were identified in the 2009 aerial reconnaissance study. During the February 2010 evaluation, these features were interpreted to be caused by channel bank erosion.

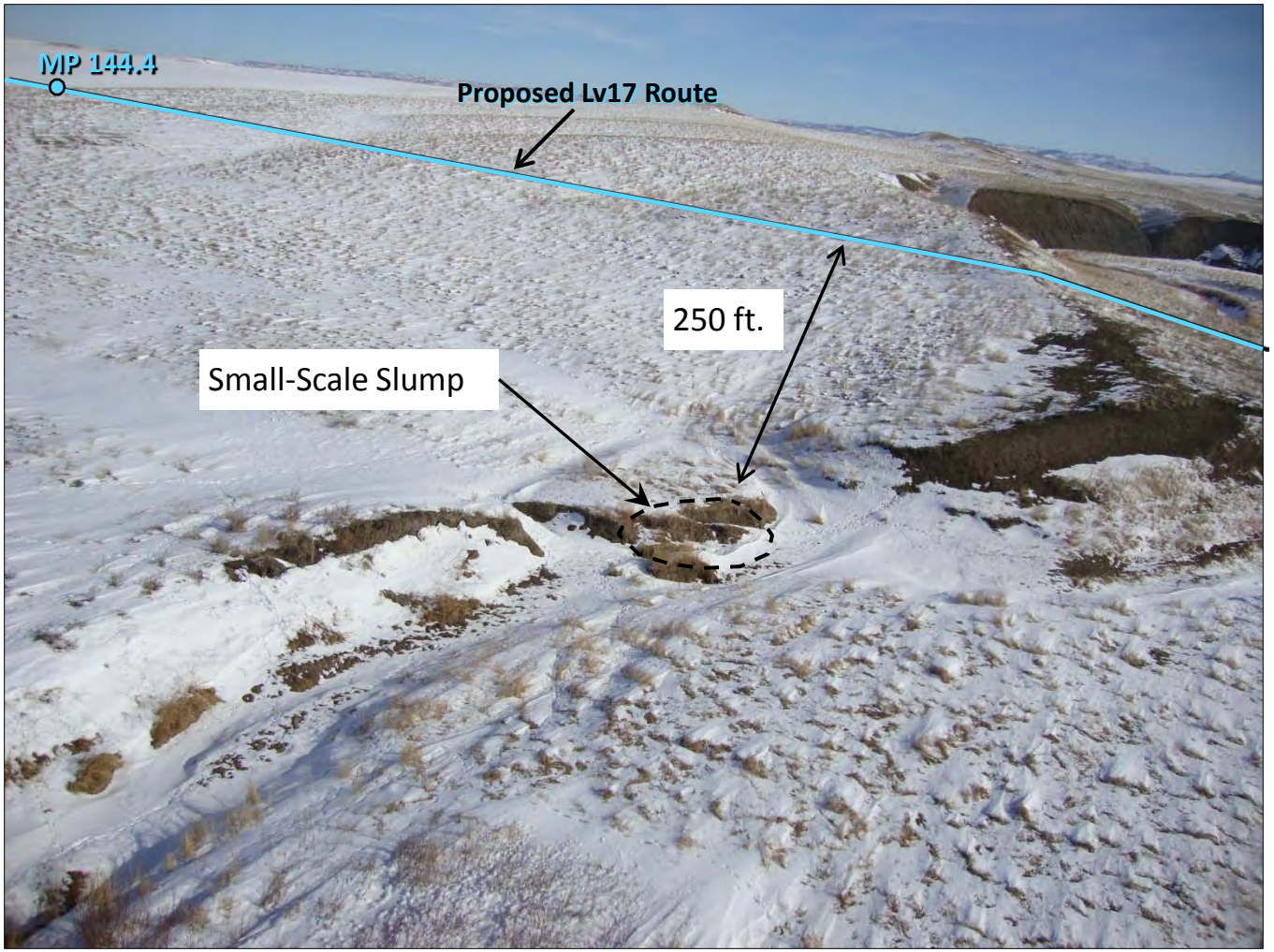

Photo 6-1: Looking east at Location 6. Here a small slump in the stream bank was identified in the 2009 aerial reconnaissance study at about MP 144.3. On-the-ground reconnaissance revealed that the pipeline alignment lies approximately 250 feet to the west of the proposed pipe centerline. Location 6 is no longer considered to be a High-Susceptibility Landslide Location.

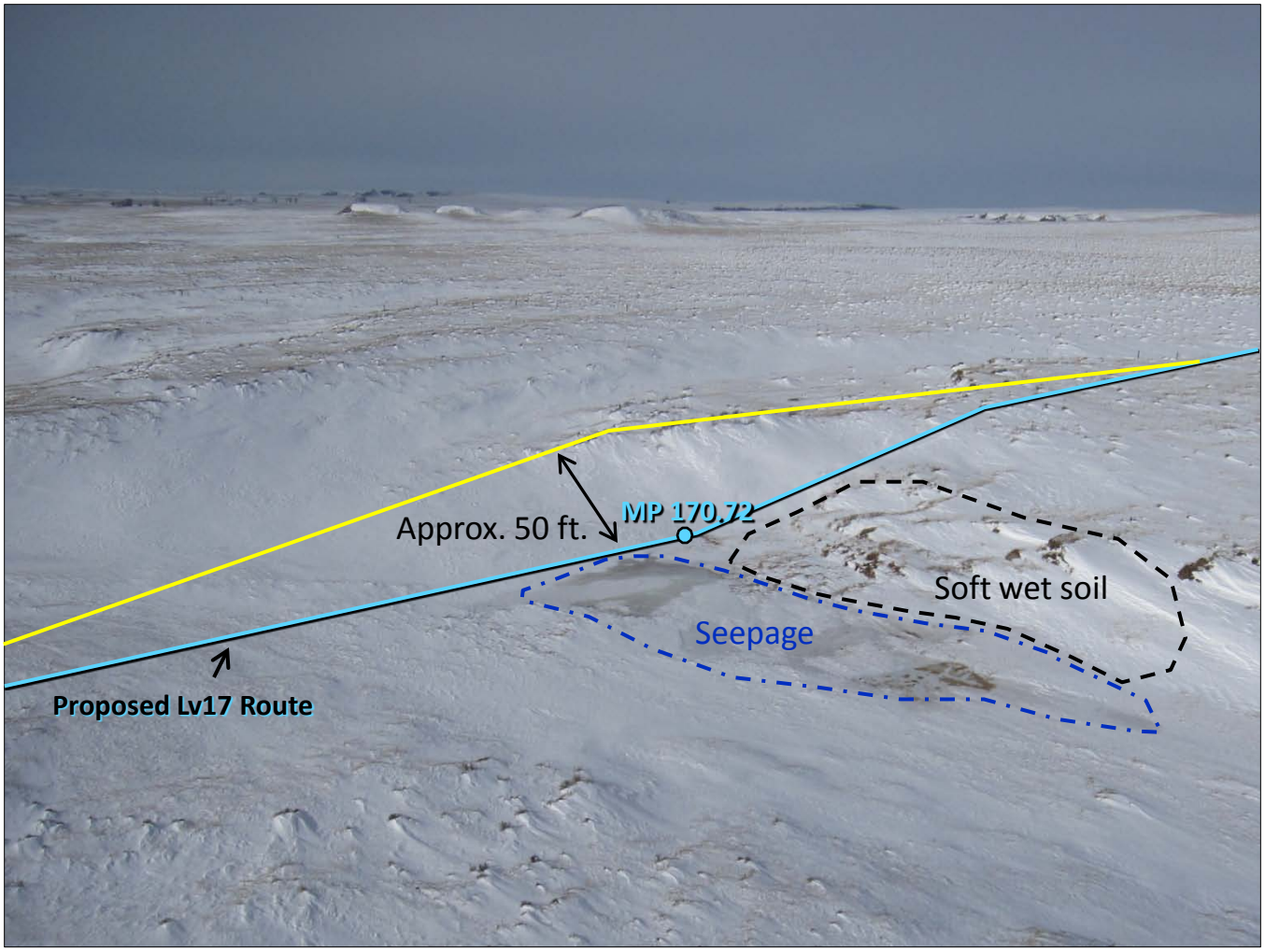

Photo 7-1: Looking northwest along proposed pipeline at Location 7 where groundwater seepage and associated soft wet soils may lead to shallow slope instability. A small reroute of the pipeline about 50 feet to the northwest would avoid the potential hazard, yet the pipeline would still be located within the LV17 proposed ROW.

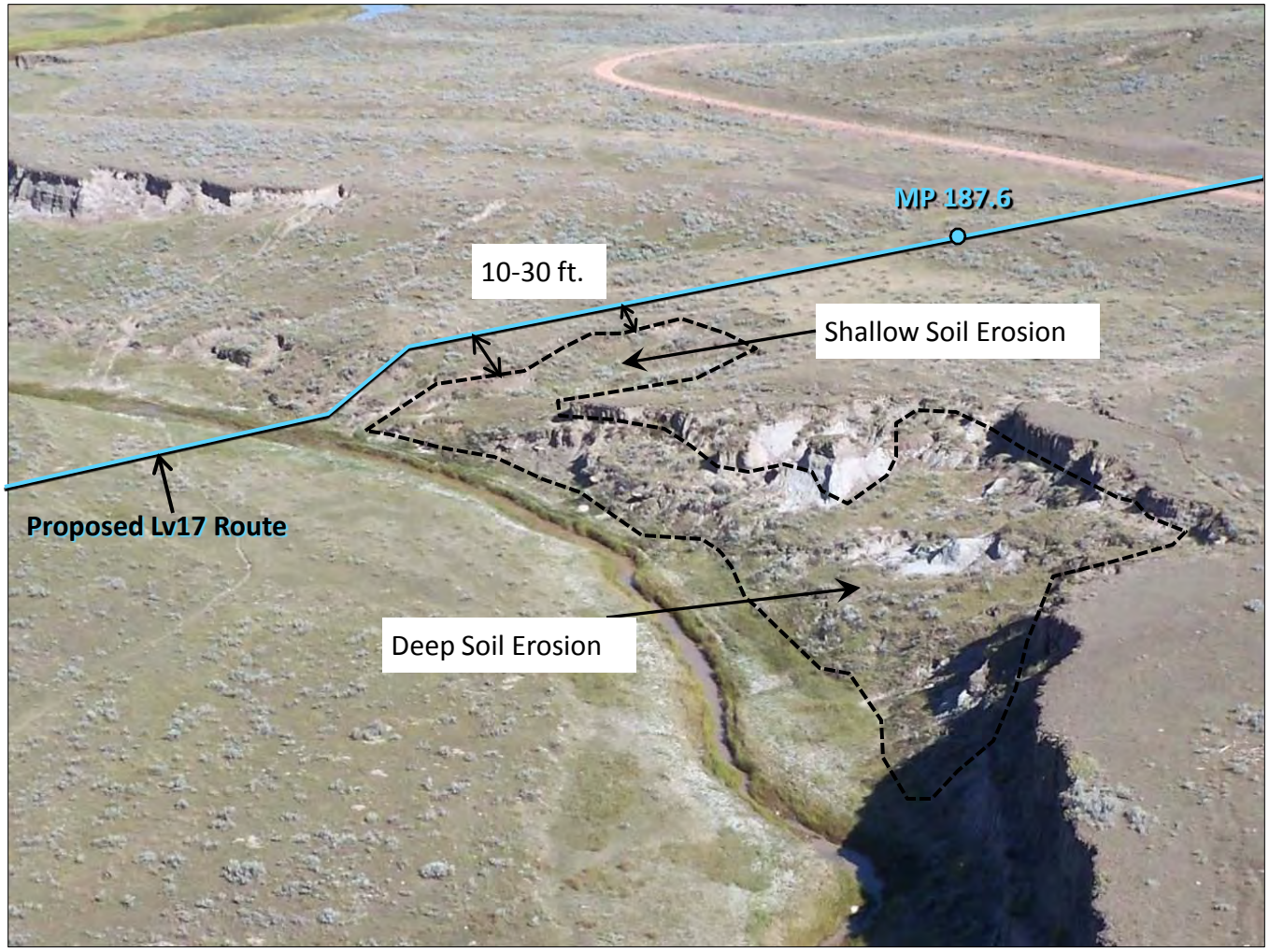

Photo 8-1: Looking north across the proposed Lv17 pipeline route (Location 8). Suspected landslide features identified on the west side of the creek during the 2009 aerial reconnaissance were found during the February 2010 ground reconnaissance to be a product of surface erosion and possible subsurface erosion (piping). Thus, this feature is no longer considered to be a location of High-Susceptibility Landslide Conditions.

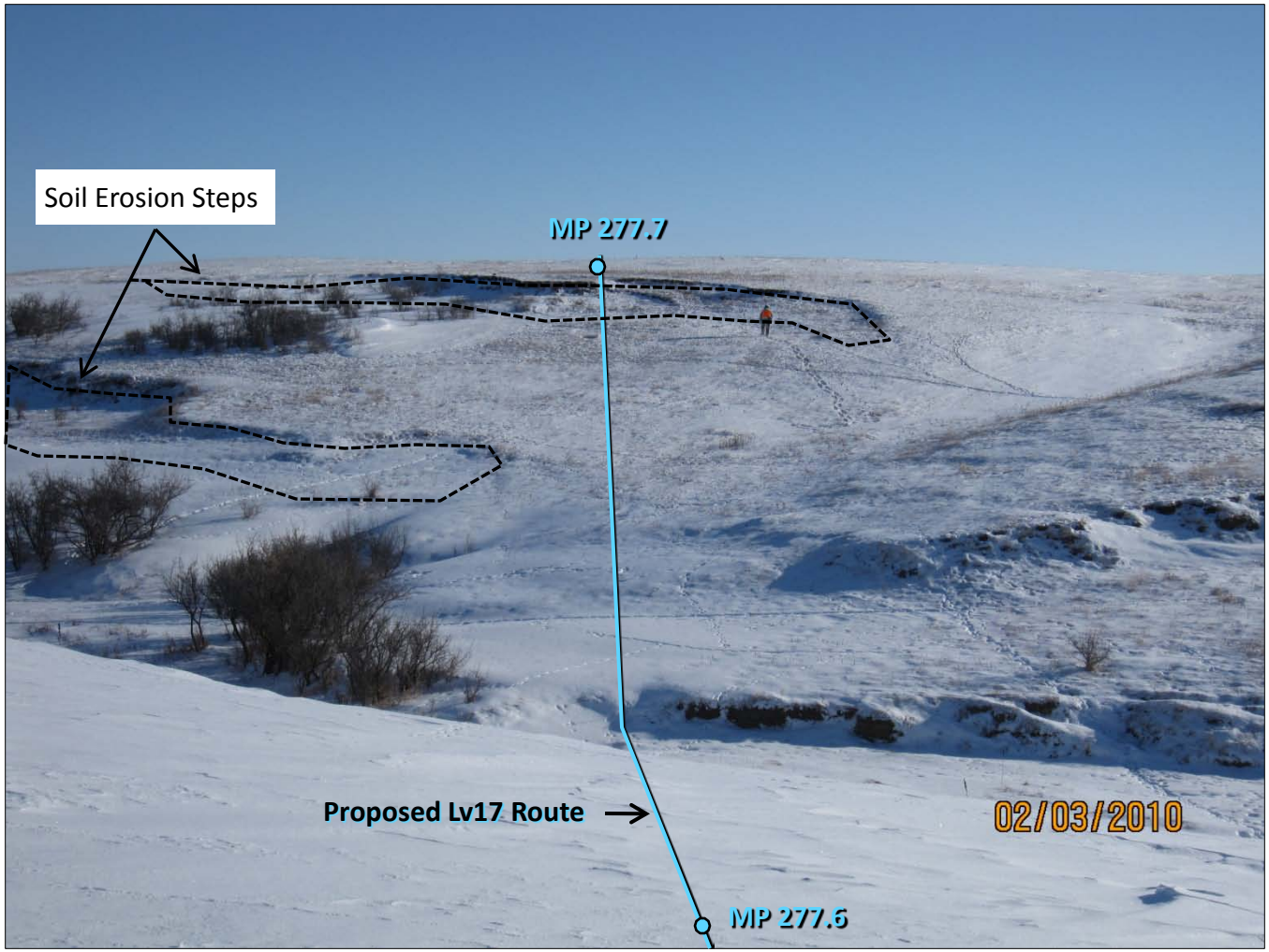

Photo 9-1: Looking northeast along the proposed Lv17 pipeline route (Location 9). Suspected landslide features identified on the northeast side of the creek during the 2009 aerial reconnaissance were found during the February 2010 ground reconnaissance to be a product of surface erosion and possible subsurface erosion (piping). Thus, this feature is no longer considered to be a location of High-Susceptibility Landslide Conditions.

Golder Associates

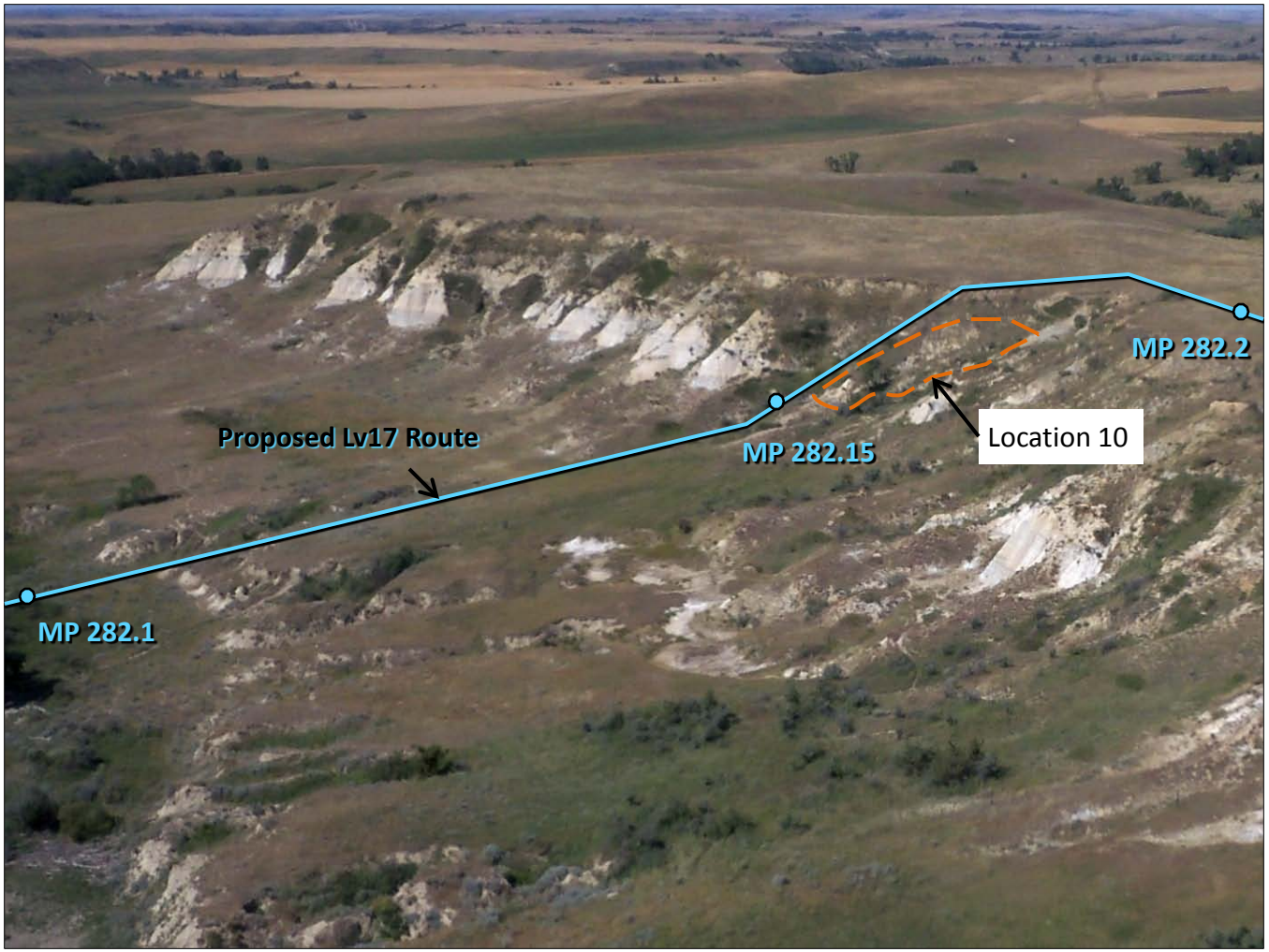

Photo 10-1: Looking west across proposed Bison Pipeline where it ascends a steep slope on the north side of the Heart River (Location 10). Conditions on this potentially active landslide slope, delineated with dashed orange line, are result of a combination of shallow (less than 10 feet deep) slope processes, including erosion, shallow slumping, however, the dominant mass wasting process on the slope at this time appears to be surface erosion.

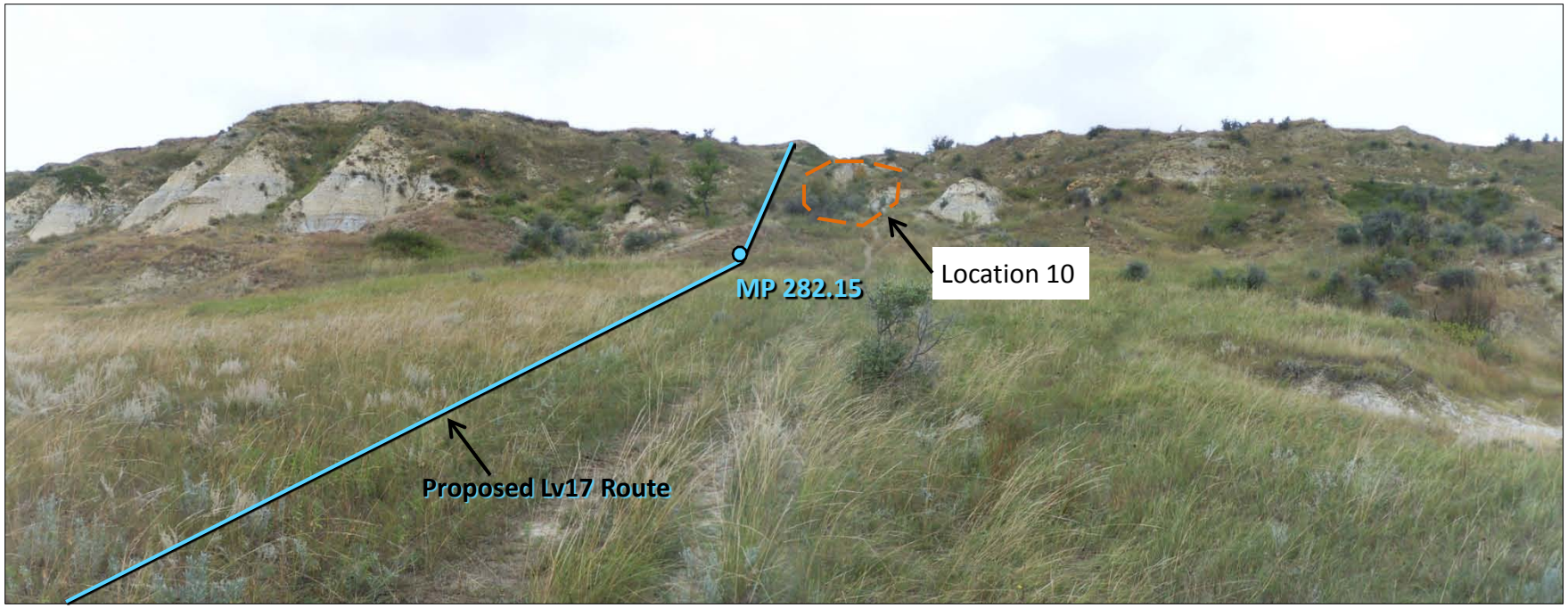

Photo 10-2: Looking north along proposed Bison Pipeline where it ascends a steep slope on the north side of the Heart River (Location 10). Conditions on this potentially active landslide slope, delineated with dashed orange line, are result of a combination of shallow (less than 10 feet deep) slope processes, including erosion, shallow slumping, however, the dominant mass wasting process on the slope at this time appears to be surface erosion.

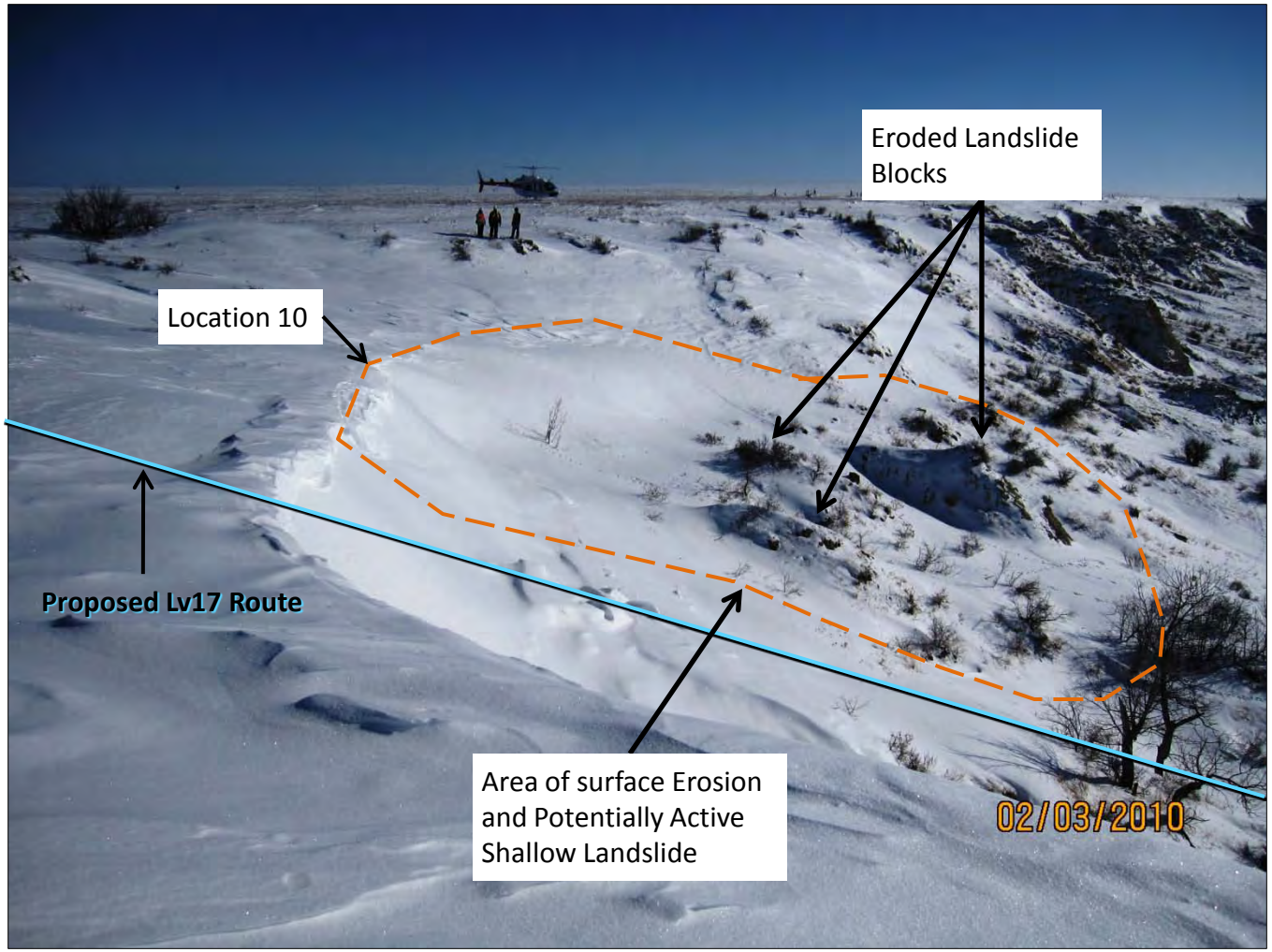

Photo 10-3: Looking east along proposed Bison Pipeline where it ascends a steep slope on the north side of the Heart River (Location 10). Conditions on this potentially active landslide slope are result of a combination of shallow (less than 10 feet deep) slope processes, including erosion, shallow slumping. Although snow covered during the February 2010 site visit, the main features of site were visible, including scattered, semi-intact blocks of rock that had rafted down from crest of the bluff. The landslide blocks were on the order of 8 to 10 feet wide however they were rounded and subdued and much of their original size had been reduced by weathering and erosion.

Golder Associates

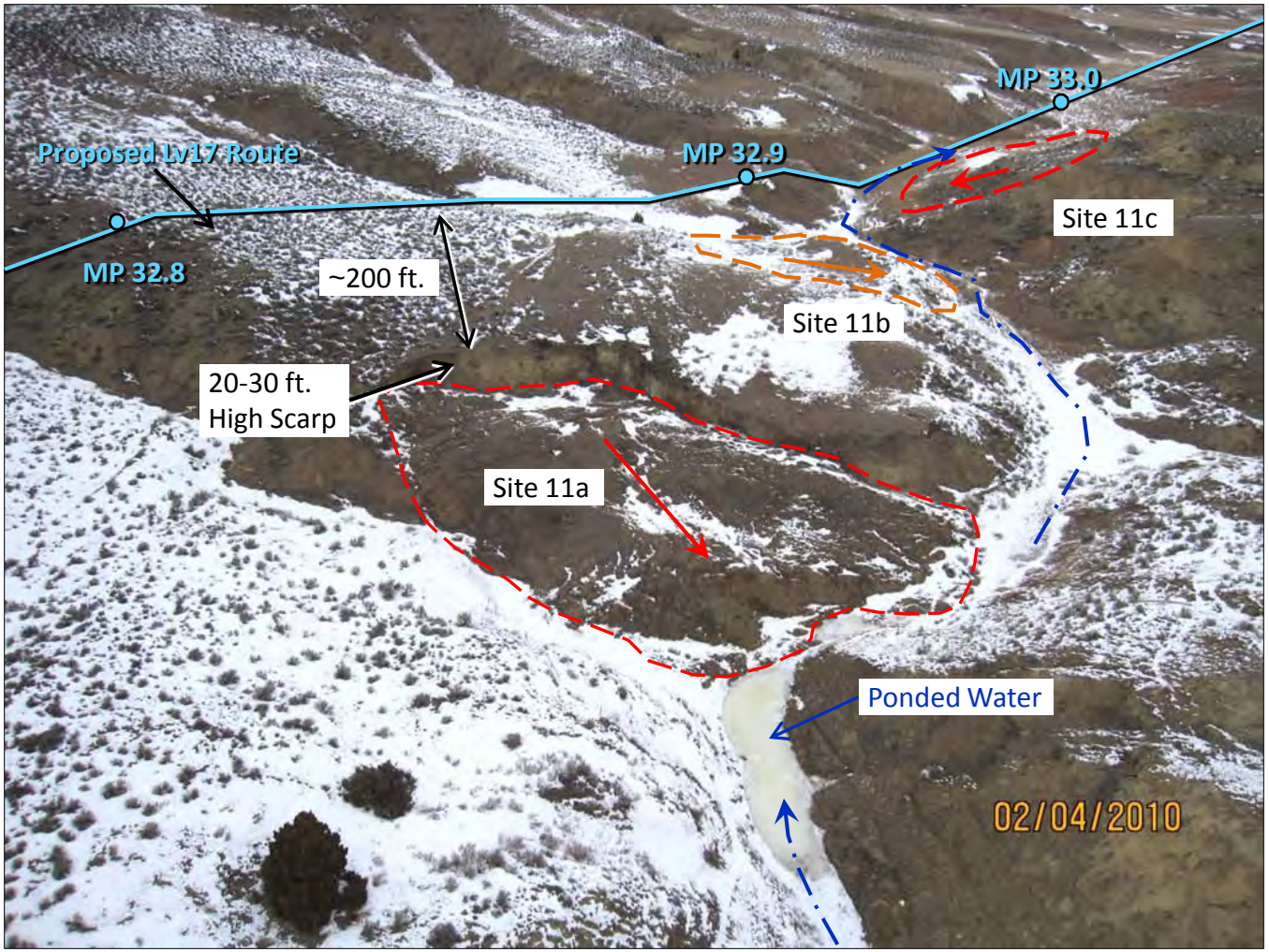

Photo 11a-1: Looking northeast across the proposed Bison Pipeline route crosses within 20 to 200 feet of three landslides (Locations 11a, 11b, 11c). The Location 11a landslide feature exhibits both slump and earth flow characteristics including a well-defined head scarp and a bulging lobate toe that has blocked an ephemeral stream channel at the base of the slide. The 200 feet wide and 140 feet long Location 11a landslide is active. The active head scarp of this landslide is located about 150 feet east, and down slope of the proposed Lv17 ROW and further upslope migration, if any, of this landslide would likely be towards the proposed ROW.

Golder Associates

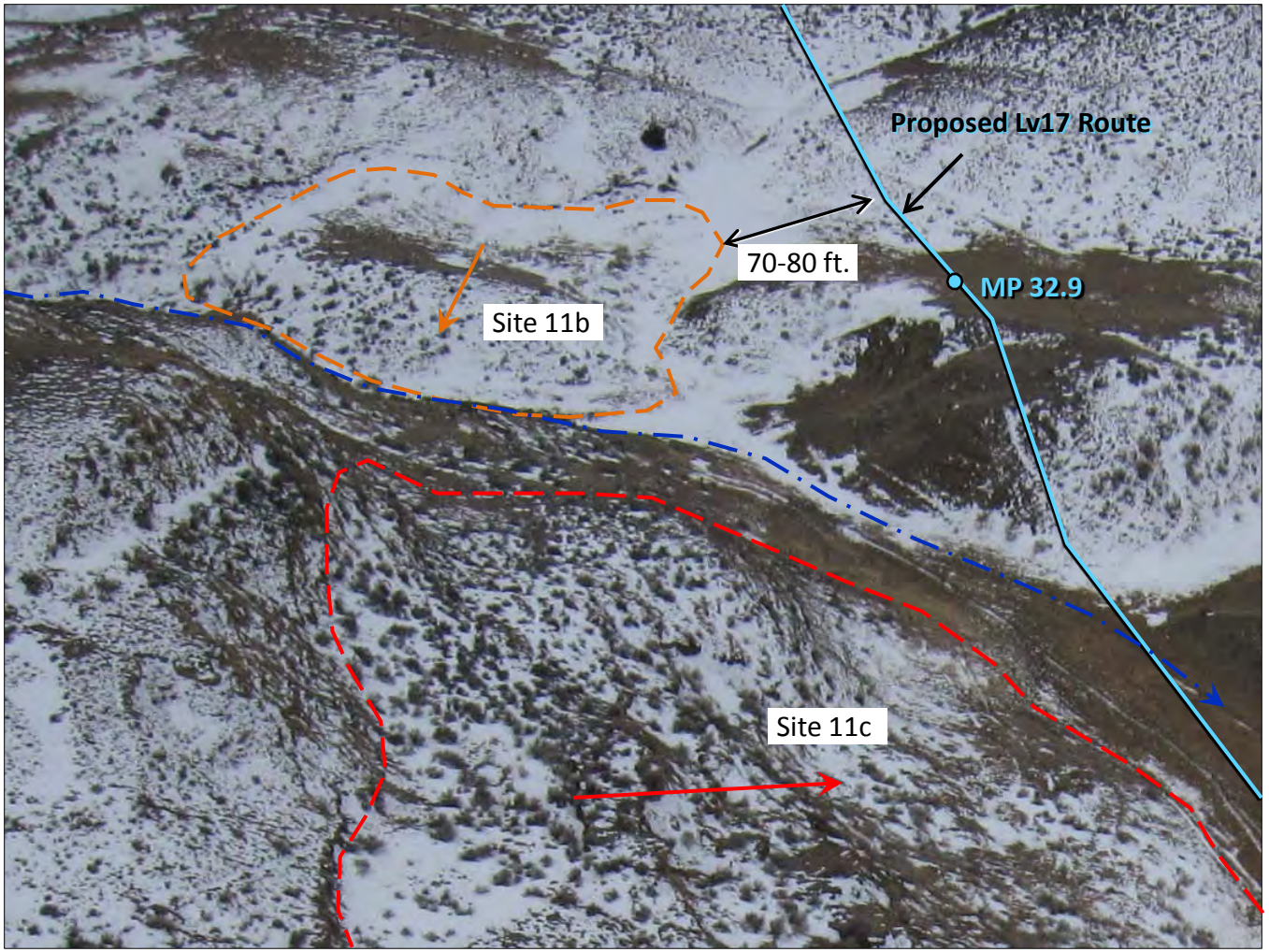

Photo 11b-1: Looking south across the proposed Bison Pipeline route where crosses near two landslides (Locations 11b, 11c). Location 11b is a potentially active slump-type landslide that measures about 150 feet wide, 150 feet long, likely several tens of feet deep. The proposed ROW is located approximately 10 feet from left-lateral edge of the landslide, however, the direction of landslide movement is roughly parallel to the ROW so migration of this landslide towards the proposed ROW is not likely.

Golder Associates

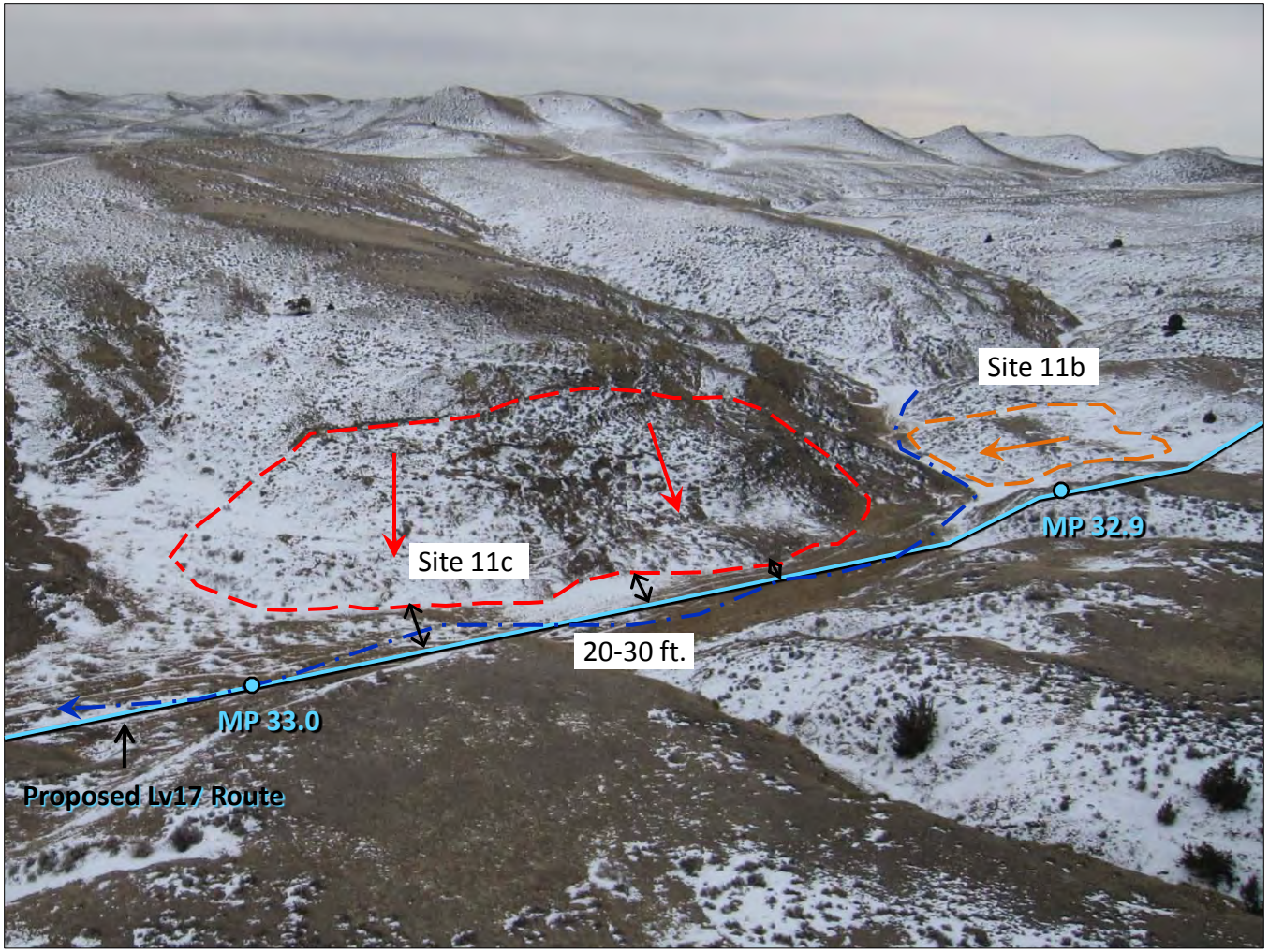

Photo 11c-1 – Looking southeast Looking south across the proposed Bison Pipeline route where crosses near two landslides (Locations 11b, 11c). Location 11c is an active slump-type landslide that measures about 300 feet wide, 200 feet long, about 70 feet high, and the depth of the landslide mass is likely on the order of several tens of feet deep. The toe of the active landslide is encroaching on the proposed ROW and within approximately 20-30 feet from the proposed pipeline centerline. The direction of landslide movement is towards the ROW.

Golder Associates

APPENDIX B

TRANSCANADA TYPICAL MITIGATION DETAILS

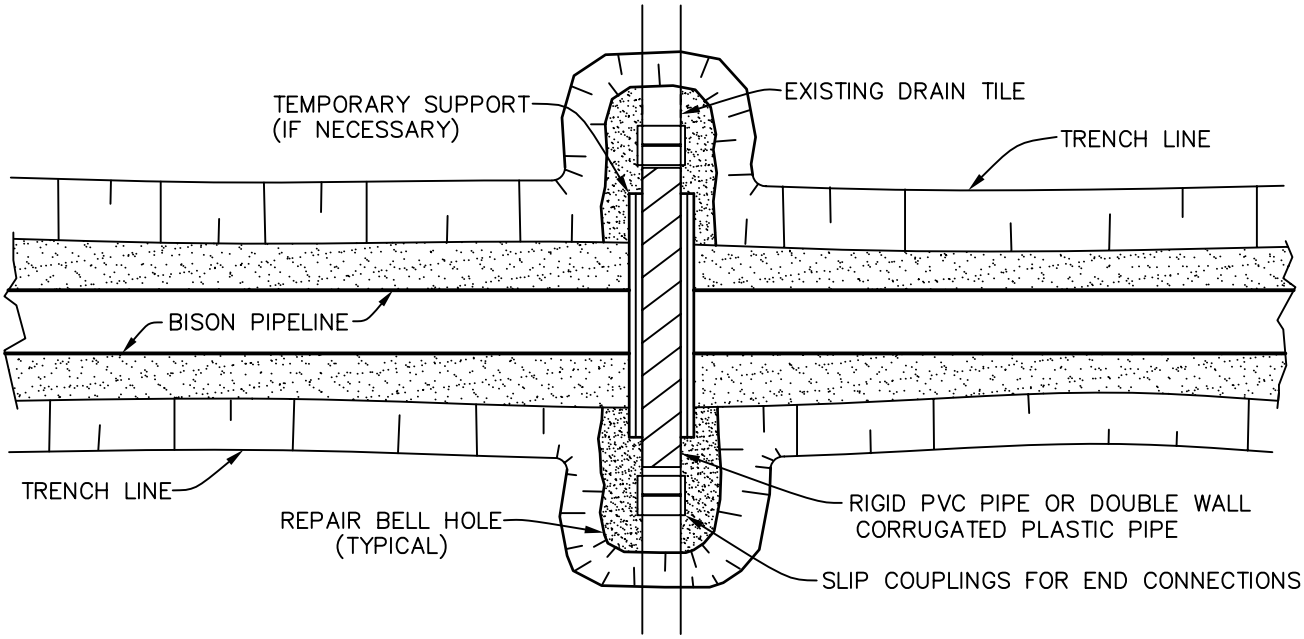

PLAN

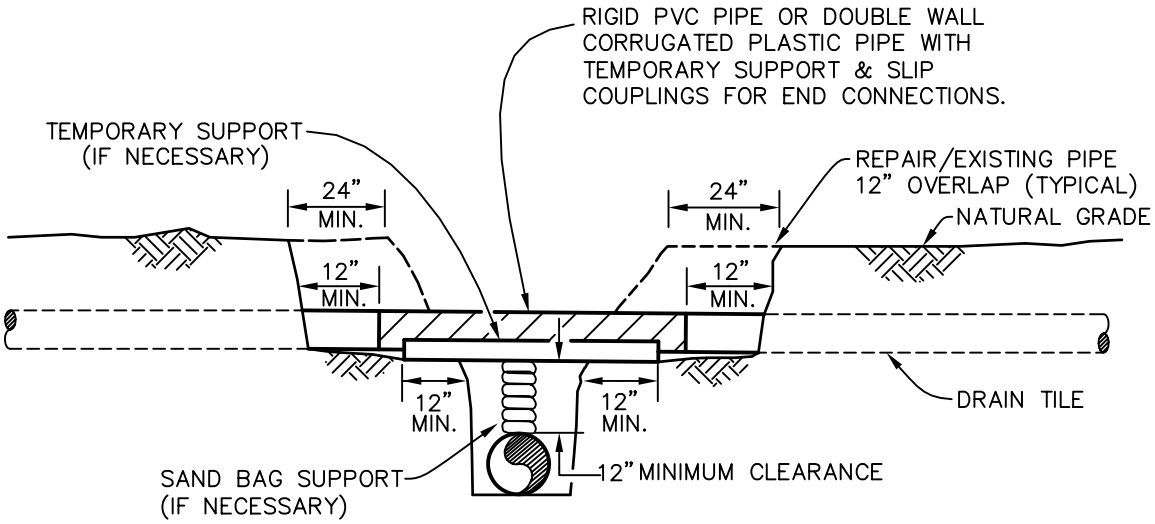

CROSS SECTION

NOTES:

1. IMMEDIATELY REPAIR TILE IF WATER IS FLOWING THROUGH TILE AT TIME OF TRENCHING.
2. SCREEN ALL EXPOSED ENDS OF TILE LINES.

REVISIONS		
0	11/12/09	ISSUED FOR CONSTRUCTION

ID

TIME

DESIGNER

UNIVERSAL ENSCO, INC.

TransCanada
In business to deliver

ORIGINATOR:		TITLE
WHH (NAME)	11/12/09 (DATE)	Bison Pipeline Project DRAINAGE AND IRRIGATION TEMPORARY DRAIN TILE REPAIR
CHECKED BY: DWA	APPROVED BY: DWA	SCALE N.T.S. / DWG No 4489-03-ML-04-001 / REV 0

TB_BOR_A4

CADD DRAWING: DO NOT MAKE MANUAL REVISIONS

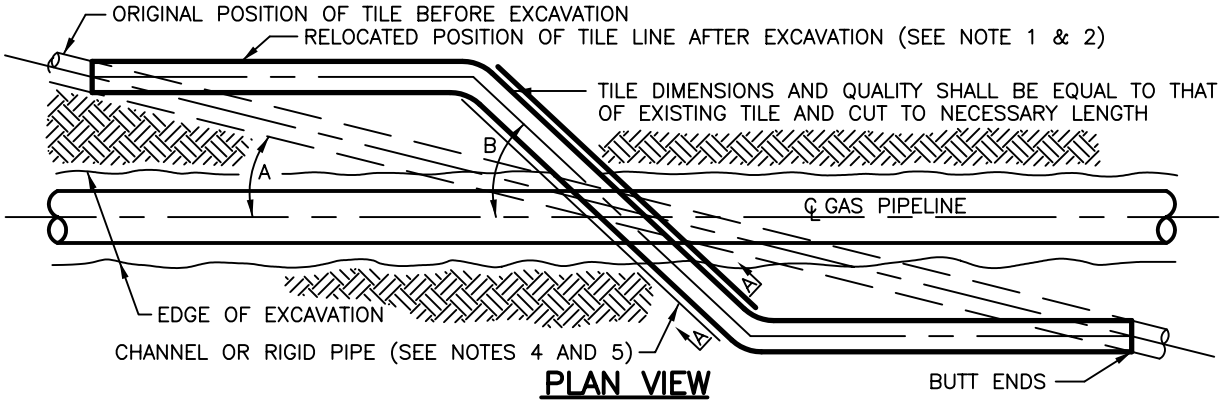

PLAN VIEW

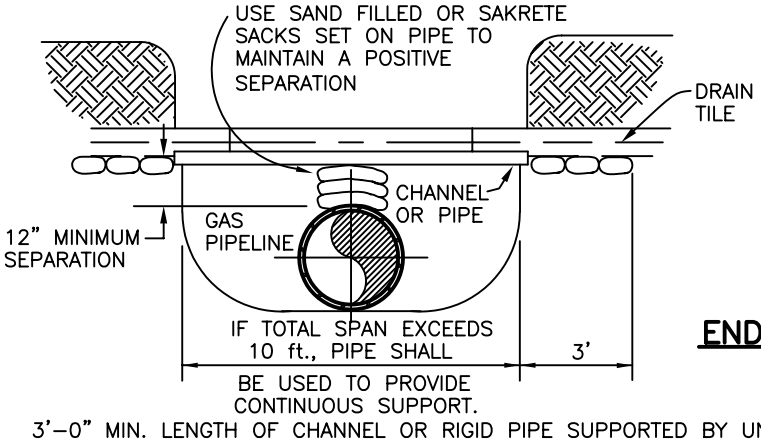

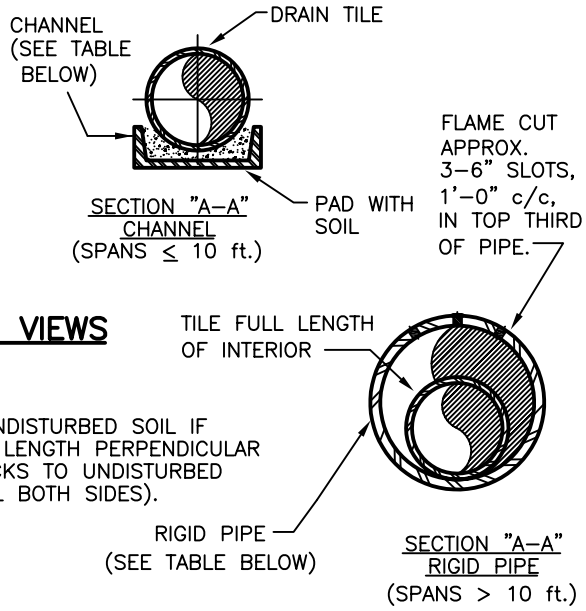

END VIEWS

3'–0" MIN. LENGTH OF CHANNEL OR RIGID PIPE SUPPORTED BY UNDISTURBED SOIL IF CROSSING IS NOT AT RIGHT ANGLES TO GAS PIPELINE, EQUIVALENT LENGTH PERPENDICULAR TO TRENCH. SHIM WITH SCARETE, SAND BAGS OR CONCRETE BLOCKS TO UNDISTURBED SOIL FOR SUPPORT AND DRAINAGE GRADIENT MAINTENANCE (TYPICAL BOTH SIDES).

NOTES

1. TILE REPAIR SHALL MAINTAIN ORIGINAL ALIGNMENT AND GRADIENT WHEN ANGLE "A", BETWEEN PIPELINE AND ORIGINAL TILE, IS MORE THAN 20° UNLESS OTHERWISE DIRECTED BY COMPANY REPRESENTATIVE.
2. WHEN ANGLE A IS LESS THAN 20°, UNLESS OTHERWISE DIRECTED BY COMPANY, ANGLE "B" SHALL BE 45° FOR USUAL WIDTHS OF TRENCH. FOR EXTRA WIDTHS IT MAY BE GREATER AS DIRECTED BY COMPANY REPRESENTATIVE.
3. DRAINAGE TILE SHALL BE REPLACED SO THAT ITS FORMER GRADIENT AND ALIGNMENT IS RESTORED.
4. DIAMETER OF RIGID PIPE SHALL BE OF ADEQUATE SIZE TO ALLOW FOR THE INSTALLATION OF THE TILE FOR THE FULL LENGTH OF THE RIGID PIPE.
5. OTHER METHODS OF SUPPORTING DRAIN TILE MAY BE USED IF THE ALTERNATE PROPOSED IS EQUIVALENT IN STRENGTH TO THE CHANNEL/PIPE SECTIONS SHOWN AND IF APPROVED BY THE COMPANY REPRESENTATIVE IN ADVANCE. SITE SPECIFIC ALTERNATE SUPPORT SYSTEM TO BE DEVELOPED BY COMPANY REPRESENTATIVE AND FURNISHED TO CONTRACTOR FOR SPANS IN EXCESS OF 20FT, TILE GREATER THAN 10" DIAMETER AND FOR "HEADER" SYSTEMS.
6. ALL MATERIAL TO BE FURNISHED BY CONTRACTOR.
7. PRIOR TO REPAIRING TILE, CONTRACTOR SHALL PROBE INTO THE EXISTING TILE TO THE FULL WIDTH OF THE RIGHT OF WAY TO DETERMINE IF ADDITIONAL DAMAGE HAS OCCURRED. ALL DAMAGED/DISTURBED TILE SHALL BE REPAIRED AS NEAR AS PRACTICAL TO ITS ORIGINAL OR BETTER CONDITION.
8. "NIGHT CAP" OPEN ENDS OF PIPE AND/OR DRAIN TILES IF REPAIRS ARE NOT COMPLETED BY END OF WORK DAY.
9. THE ENDS OF THE EXISTING TILE SHALL NOT BE PLUGGED AND CONTINUOUS FLOW SHALL BE MAINTAINED IN THE TILE SYSTEM DURING THE CONSTRUCTION ACTIVITY UNLESS OTHERWISE AUTHORIZED.

MINIMUM SUPPORT TABLE

TILE SIZE	CHANNEL SIZE	PIPE SIZE	
3"	4" @ 5.4 #/ft.	4"	STD. WT
4"–5"	5" @ 6.7 #/ft.	6"	STD. WT
6"–9"	7" @ 9.8 #/ft.	8"–10"	STD. WT
10"	10" @ 15.3 #/ft.	12"	STD. WT

REVISIONS | 0 | 11/12/09 | ISSUED FOR CONSTRUCTION

ID | TIME | DESIGNER

UNIVERSAL ENSCO, INC.

TransCanada — In business to deliver

ORIGINATOR: WHH (NAME) 11/12/09 (DATE)

CHECKED BY: DWA | APPROVED BY: DWA

TITLE: Bison Pipeline Project

DRAINAGE AND IRRIGATION PERMANENT DRAIN TILE REPAIR

SCALE N.T.S. | DWG No 4489–03–ML–04–002 | REV 0

TB_BOR_A4

CADD DRAWING: DO NOT MAKE MANUAL REVISIONS

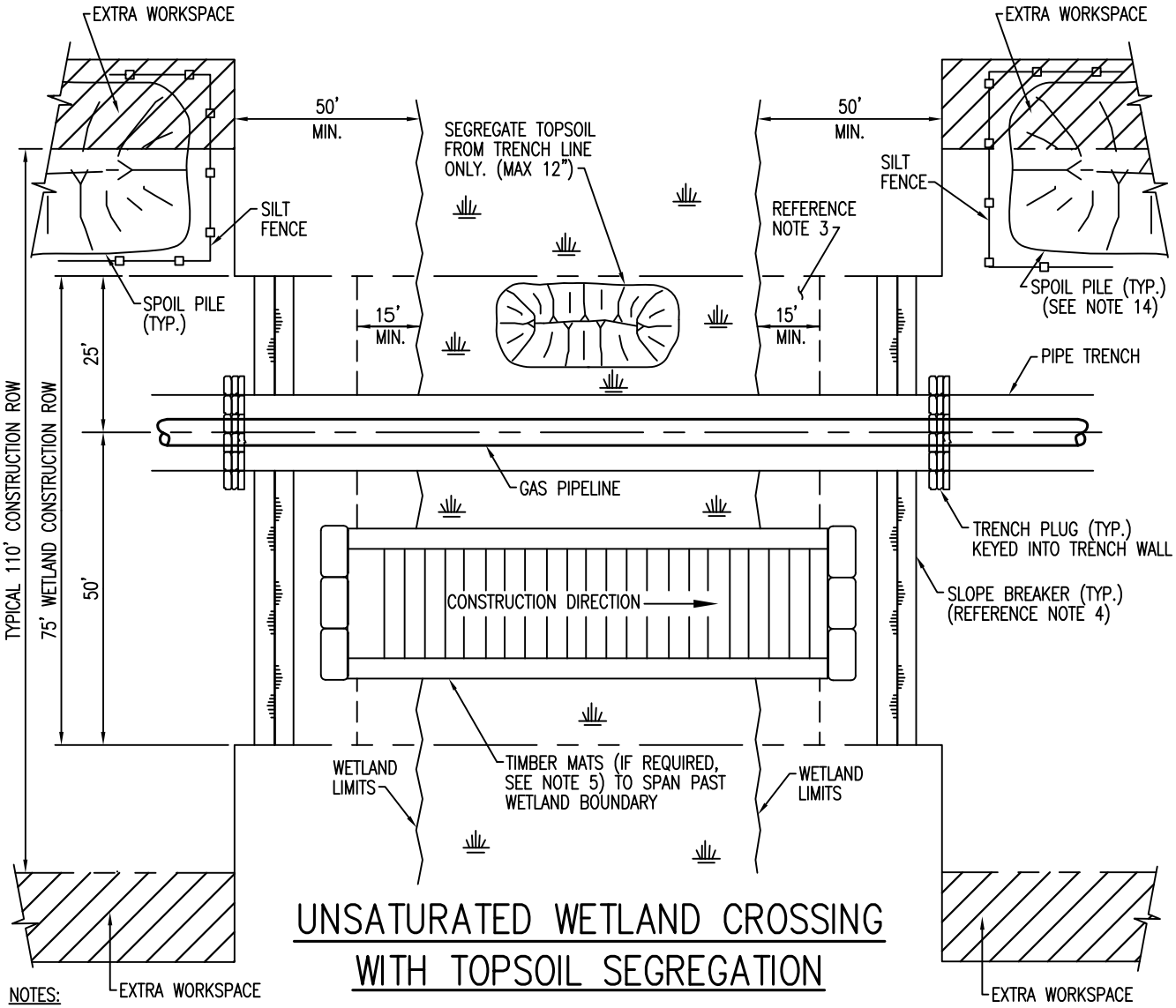

UNSATURATED WETLAND CROSSING WITH TOPSOIL SEGREGATION

NOTES:

1. THIS METHOD IS TO USED IN WETLANDS WITHOUT STANDING WATER OR SATURATED SOILS. IF A WETLAND IS BEING CULTIVATED AND BEING FARMED, NO WETLAND CONSTRUCTION PROCEDURES ARE REQUIRED.
2. FLAG BUFFER ZONES PRIOR TO CLEARING.
3. NO FUELING OR MOBILE EQUIPMENT IS ALLOWED WITHIN 100 FEET FROM BUFFER ZONE. PLACE "NO FUELING' SIGN POSTS APPROXIMATELY 100 FEET BACK FROM WETLAND BOUNDARY. REFUEL STATIONARY EQUIPMENT AS PER THE PROJECTS SPILL PREVENTION PROCEDURES.
4. INSTALL SLOPE BREAKER AT THE BASE OF ALL SLOPES ADJACENT TO THE WETLANDS OR AS DIRECTED BY THE PROJECT.
5. CONSTRUCT WHEN DRY IF POSSIBLE. IF SITE BECOMES WET AT TRENCHING, AVOID SOIL COMPACTION BY UTILIZING TIMBER RIP-RAP OR PRE-FABRICATED EQUIPMENT MATS. USE ADDITIONAL TIMBER MAT LAYERS TO RAISE CROSSING ABOVE GRADE WHERE POOR SOIL CONDITIONS EXIST AND CONDITIONS REQUIRE.
6. AVOID ADJACENT WETLANDS. INSTALL SEDIMENT BARRIERS (STRAW BALES AND/OR SILT FENCE) AT DOWN SLOPE EDGE OF right of way WETLAND EDGE IF EVIDENT, OTHERWISE INSTALL BARRIER ON BOTH EDGES.
7. EXCEPT FOR THE GRADED DRIVE LANE CONTRACTOR SHALL POSTPONE CLEARING IN THE BUFFER AREA ADJACENT TO WETLAND UNTIL THE STAGING AREA IS PREPARED AND WORK IN THE WETLAND IS READY TO COMMENCE. BUFFER IS A MINIMUM OF 15 FEET AND EXTENDS 15 FEET BEYOND THE EDGE OF THE RIPARIAN AREA TO A MAXIMUM OF 50 FEET.
8. RESTRICT ROOT GRUBBING TO ONLY THAT AREA OVER THE DITCH LINE AND REMOVE STUMPS FROM WETLANDS FOR DISPOSAL.
9. TRENCH THROUGH WETLANDS.
10. PIPE SECTION TO BE FABRICATED WITHIN THE WETLAND AND ADJACENT TO ALIGNMENT, OR IN EXTRA WORKSPACE OUTSIDE THE WETLAND AND WALKED IN.
11. LOWER-IN PIPE, BACKFILL TRENCH.
12. RESTORE GRADE TO PRE-CONSTRUCTION TOPOGRAPHY. REPLACE TOPSOIL AND INSTALL PERMANENT EROSION CONTROL.
13. IF UTILIZED, REMOVED TIMBER MATS OR PRE-FABRICATED MAT UPON COMPLETION.
14. SPOIL PILE STORAGE WITHIN WETLAND CONSTRUCTION ROW OVER GEOTEXTILE IS ALLOWED.

REVISIONS | 0 | ISSUED FOR CONSTRUCTION

UniversalPegasus INTERNATIONAL
TransCanada In business to deliver

ORIGINATOR:		TITLE BISON PIPELINE PROJECT
UEI (NAME)	03/29/10 (DATE)	BISON PIPELINE LLC TYPICAL UNSATURATED WETLAND CROSSING WITH TOPSOIL SEGREGATION CROSSING METHOD 1
CHECKED BY: RG	APPROVED BY: DWA	SCALE N.T.S. / DWG No 4489-03-ML-05-002 / REV 0

TB_BOR_A4

CADD DRAWING: DO NOT MAKE MANUAL REVISIONS

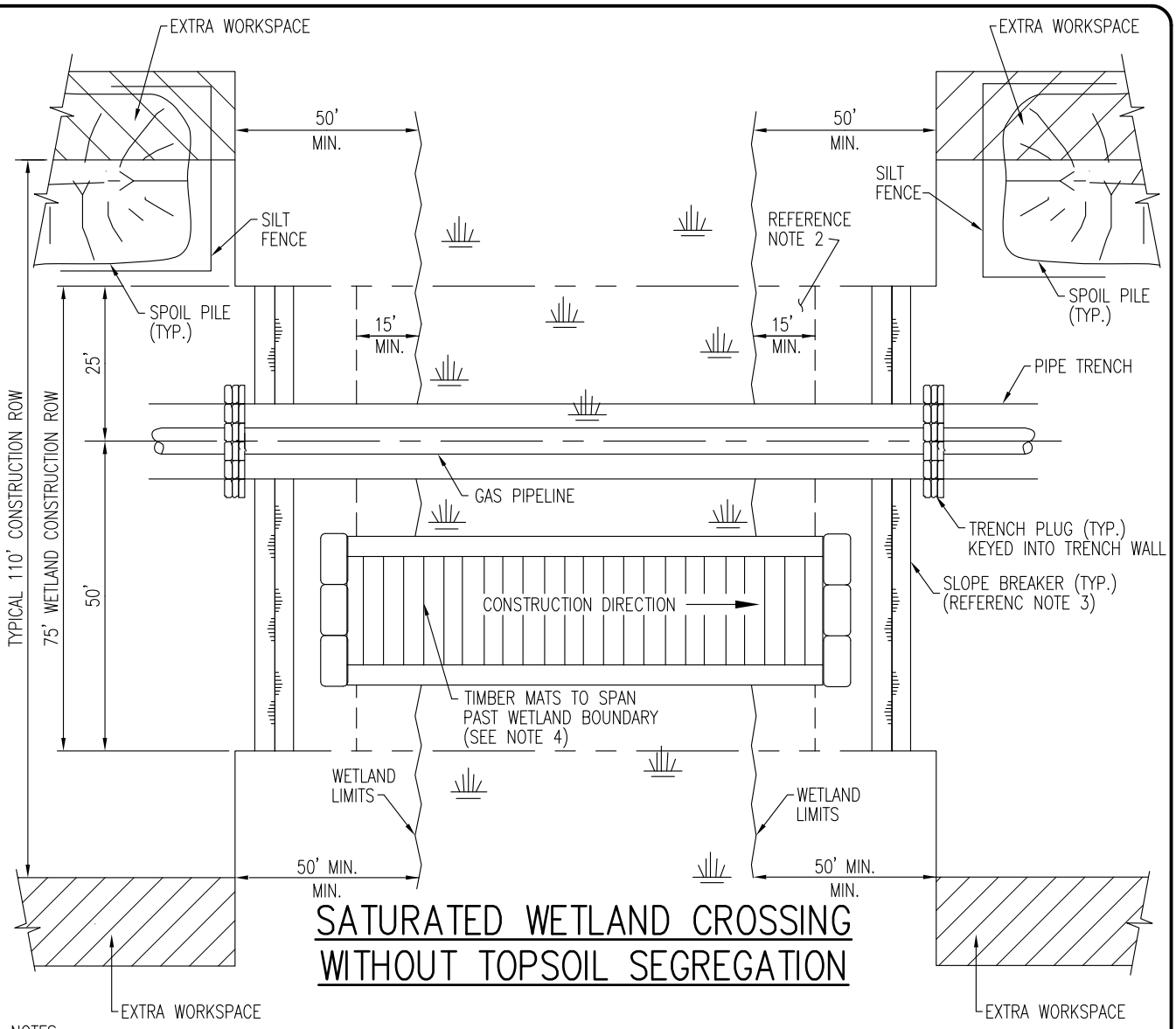

SATURATED WETLAND CROSSING WITHOUT TOPSOIL SEGREGATION

NOTES:

1. FLAG BUFFER ZONES PRIOR TO CLEARING. EXCEPT FOR THE GRADED DRIVE LANE CONTRACTOR SHALL POSTPONE CLEARING IN THE BUFFER AREA ADJACENT TO WETLAND UNTIL THE STAGING AREA IS PREPARED AND WORK IN THE WETLAND IS READY TO COMMENCE. BUFFER IS A MINIMUM OF 15 FEET AND EXTENDS 15 FEET BEYOND THE EDGE OF THE RIPARIAN AREA TO A MAXIMUM OF 50 FEET.
2. NO REFUELING OF MOBILE EQUIPMENT IS ALLOWED WITHIN 100 FEET OF BUFFER ZONE. PLACE "NO FUELING" SIGN POSTS 100 FEET BACK FROM BUFFER ZONE. REFUEL STATIONARY EQUIPMENT AS PER THE PROJECTS SPILL PREVENTION PROCEDURES.
3. INSTALL SLOPE BREAKER AT THE BASE OF ALL SLOPES ADJACENT TO THE WETLANDS.
4. INSTALL TIMBER MATS/RIPRAP THROUGH ENTIRE WETLAND AREA. EQUIPMENT NECESSARY FOR right of way CLEARING MAY MAKE ONE (1) PASS THROUGH THE WETLAND BEFORE MATS ARE INSTALLED. USE ADDITIONAL TIMBER MAT LAYERS TO RAISE CROSSING ABOVE GRADE WHERE POOR SOIL CONDITIONS EXIST.
5. AVOID ADJACENT WETLANDS INSTALL SEDIMENT BARRIERS (STRAW BALES AND/ OR SILT FENCE) AT DOWN SLOPE EDGE OF right of way AND ALONG WETLAND EDGE AS REQUIRED.
6. RESTRICT ROOT GRUBBING TO THAT ARE OVER THE DITCH LINE AND DITCH SPOIL AREAS AND REMOVED FROM WETLAND FOR DISPOSAL.
7. TOPSOIL STRIPPING SHALL NOT BE REQUIRED IN SATURATED SOIL CONDITIONS.
8. LEAVE HARD PLUGS AT EDGE OF WETLANDS UNTIL JUST PRIOR TO TRENCHING.
9. PIPE SECTION MAY BE FABRICATED WITHIN WETLAND AND ADJACENT TO ALIGNMENT OR IN EXTRA WORKSPACE OUTSIDE THE WETLAND AND WALKED IN.
10. TRENCH THROUGH WETLANDS.
11. LOWER-IN PIPE. INSTALL TRENCH PLUGS AT WETLAND EDGES AS REQUIRED AND BACKFILL IMMEDIATELY.
12. REMOVE TIMBER MATS OR PRE-FABRICATED MATS FROM WETLAND UPON COMPLETION.
13. RESTORE GRADE TO NEAR PRE-CONSTRUCTION TOPOGRAPHY. REPLACE TOPSOIL AND INSTALL PERMANENT EROSION CONTROL.

REVISIONS		
0	ISSUED FOR CONSTRUCTION	

I:\15304\Mapping\Typicals\4489-03-ML-05-003_rEV_0.dwg, 3/31/2010 4:31:07 PM

UniversalPegasus INTERNATIONAL
TransCanada In business to deliver

ORIGINATOR:		TITLE BISON PIPELINE PROJECT		
JAG (NAME)	08/17/09 (DATE)	BISON PIPELINE LLC TYPICAL SATURATED WETLAND CROSSING WITHOUT TOPSOIL SEGREGATION CROSSING METHOD 2		
CHECKED BY: ALH	APPROVED BY: CWB	SCALE N.T.S.	DWG No 4489-03-ML-05-003	REV 0

TB_BOR_A4

CADD DRAWING: DO NOT MAKE MANUAL REVISIONS

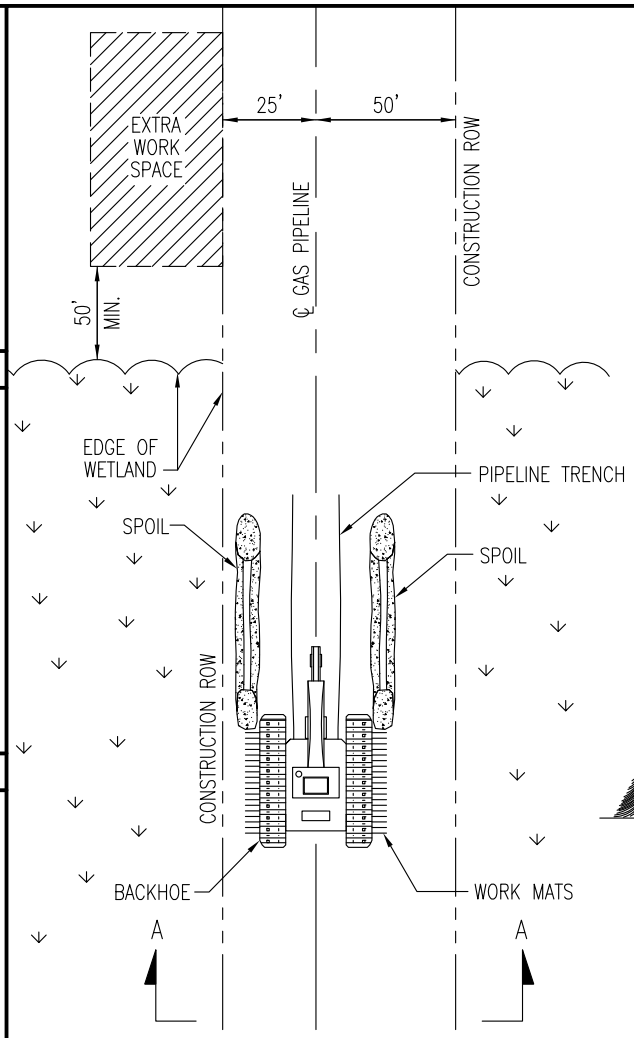

PLAN VIEW

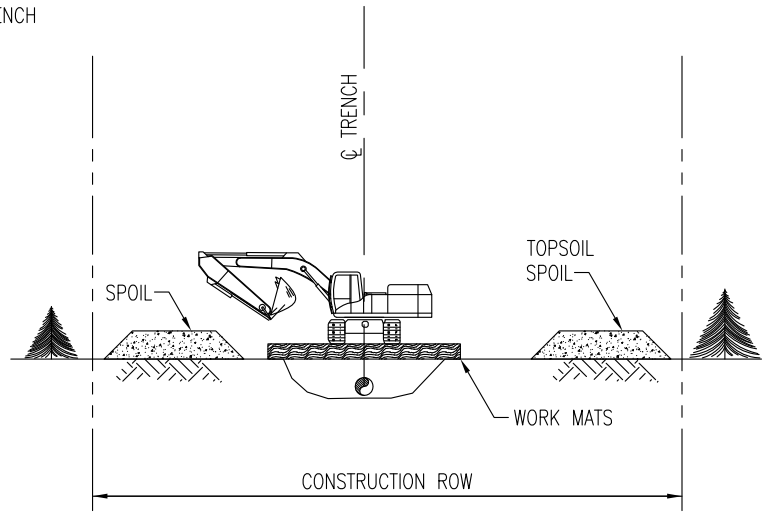

SECTION A–A

CONSTRUCTION PROCEDURES:

1. THE CONSTRUCTION ROW FOR THIS TYPE OF CONSTRUCTION SHALL BE 75 FEET.
2. NO REFUELING OF MOBILE EQUIPMENT IS ALLOWED WITHIN APPROXIMATELY 100 FEET OF WETLAND. PLACE "NO FUELING" SIGN POSTS 100 FEET BACK FROM WETLAND BOUNDARY. REFUEL STATIONARY EQUIPMENT AS PER THE PROJECT'S SPILL PREVENTION PROCEDURES.
3. INSTALL TEMPORARY SLOPE BREAKER UPSLOPE WITHIN 100 FEET OF WETLAND BOUNDARY AS DIRECTED BY THE PROJECT.
4. RESTRICT ROOT GRUBBING TO ONLY THE AREA OVER THE DITCHLINE.
5. TOPSOIL STRIPPING SHALL NOT BE REQUIRED IN SATURATED SOIL CONDITIONS.
6. UTILIZE AMPHIBIOUS EXCAVATORS (PONTOON MOUNTED BACKHOES) OR TRACKED BACKHOES SUPPORTED BY FABRICATED TIMBER MATS OR FLOATS TO EXCAVATE TRENCH. IF FABRICATED TIMBER MATS ARE USED FOR STABILIZATION, THE BACKHOE SHALL GRADUALLY MOVE ACROSS THE WETLAND BY MOVING THE MAT FROM IMMEDIATELY BEHIND TO IMMEDIATELY IN FRONT OF THE BACKHOE'S PATH.
7. AVOID ADJACENT WETLANDS.
8. FABRICATE PIPE IN STAGING AREA OUTSIDE THE WETLAND IN THE EXTRA WORK SPACE AS INDICATED ON THE CONSTRUCTION DRAWINGS.
9. LEAVE HARD PLUGS AT THE EDGE OF THE WETLAND UNTIL JUST PRIOR TO PIPE PLACEMENT.
10. FLOAT PIPE IN PLACE, LOWER–IN INSTALL TRENCH PLUGS AT WETLAND EDGES WHERE REQUIRED AND BACKFILL IMMEDIATELY.
11. REMOVE TIMBER MATS OR PRE–FABRICATED MATS OF NON–NATIVE MATERIAL FROM WETLANDS UPON COMPLETION.
12. RESTORE GRADE TO NEAR PRE–CONSTRUCTION TOPOGRAPHY AND INSTALL PERMANENT EROSION CONTROL.
13. FLAG WETLAND BOUNDARIES PRIOR TO CLEARING.

REVISIONS		
0	ISSUED FOR CONSTRUCTION	

I:\15304\Mapping\Typicals\Modified or Created\4489-03-ML-05-006_REV_0.dwg, 3/30/2010 5:54:08 PM

UniversalPegasus INTERNATIONAL
TransCanada In business to deliver

ORIGINATOR:		TITLE	BISON PIPELINE PROJECT
UEI (NAME)	03/30/10 (DATE)		BISON PIPELINE LLC TYPICAL PUSH PULL WETLAND CROSSING METHOD 3
CHECKED BY: RG	APPROVED BY: DWA	SCALE N.T.S.	DWG No 4489–03–ML–05–006 / REV 0

TB_BOR_A4

CADD DRAWING: DO NOT MAKE MANUAL REVISIONS

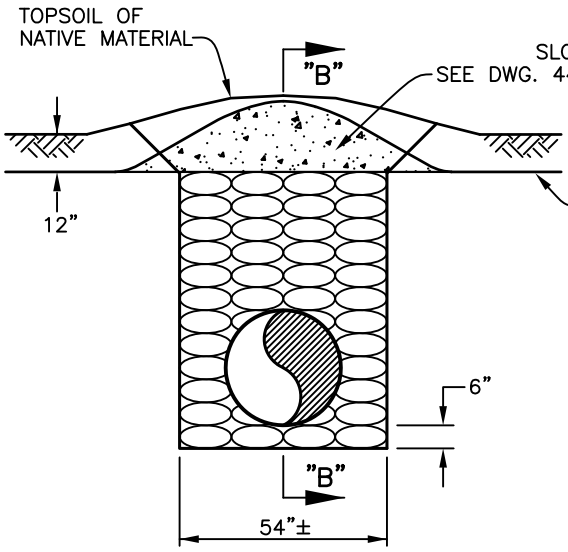

SECTION "A-A"

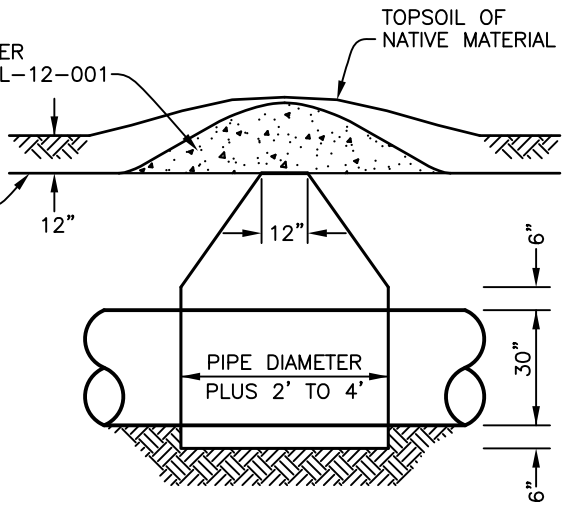

SECTION "B-B"

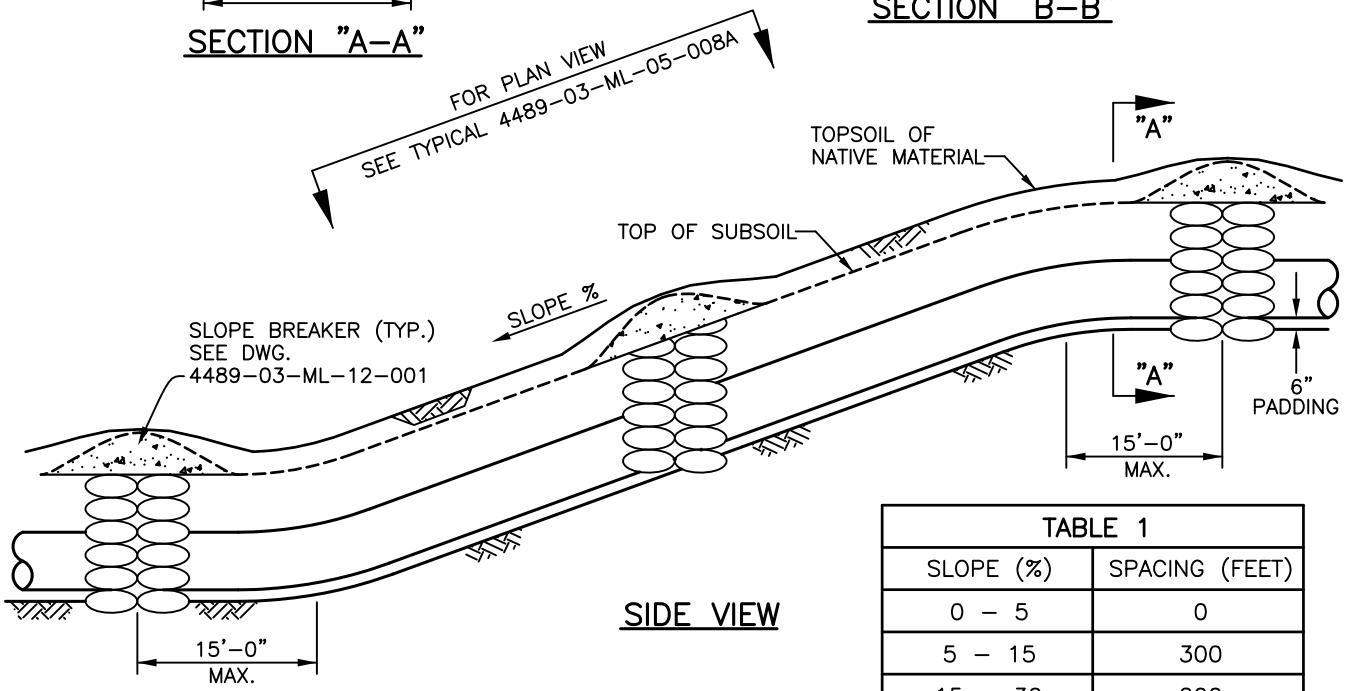

SIDE VIEW

TABLE 1	
SLOPE (%)	SPACING (FEET)
0 – 5	0
5 – 15	300
15 – 30	200
>30	100

NOTES

1. TRENCH PLUGS SHALL BE INSTALLED AT SHARP CHANGES OF SLOPE ALONG TRENCH LINE AND AT LOCATIONS WHERE THE NATURAL DRAINAGE PATTERN, PROFILE AND TYPE OF BACKFILL MATERIALS MAY RESULT IN THE LOSS OF BACKFILL MATERIAL OR ALTERATION OF THE NATURAL DRAINAGE PATTERN. LOCATION AND SPACING OF TRENCH PLUGS SHALL BE AS DIRECTED BY THE COMPANY.
2. CONSTRUCT TRENCH PLUGS WITH SAND BAGS OR SAKRETE. DO NOT USE TOP SOIL FOR FILLING SAND BAGS.
3. INSTALL TRENCH PLUGS AT THE BASE OF SLOPES ADJACENT TO IMPROVED ROADS, WATERBODIES AND WETLANDS.
4. TRENCH PLUGS SHALL BE INSTALLED IN PIPELINE TRENCH ON SLOPED GRADES ACCORDING TO THE SPACING SHOWN IN "TABLE 1".
5. PLUGS SHALL BE KEYED INTO TRENCH WALL.
6. A SLOPE BREAKER IS TO BE PLACED TO COINCIDE WITH THE TOP OF EACH PERMANENT TRENCH PLUG.

REVISIONS | 0 | ISSUED FOR CONSTRUCTION

UniversalPegasus INTERNATIONAL
TransCanada In business to deliver

ORIGINATOR: WHH (NAME) 03/30/10 (DATE)
CHECKED BY: DWA
APPROVED BY: DWA

TITLE
Bison Pipeline Project
BISON PIPELINE LLC
TYPICAL ENVIRONMENTAL DETAIL
TRENCH PLUG

SCALE N.T.S. | DWG No 4489-03-ML-05-008 | REV 0

TIME
DESIGNER

TB_BOR_A4

CADD DRAWING: DO NOT MAKE MANUAL REVISIONS

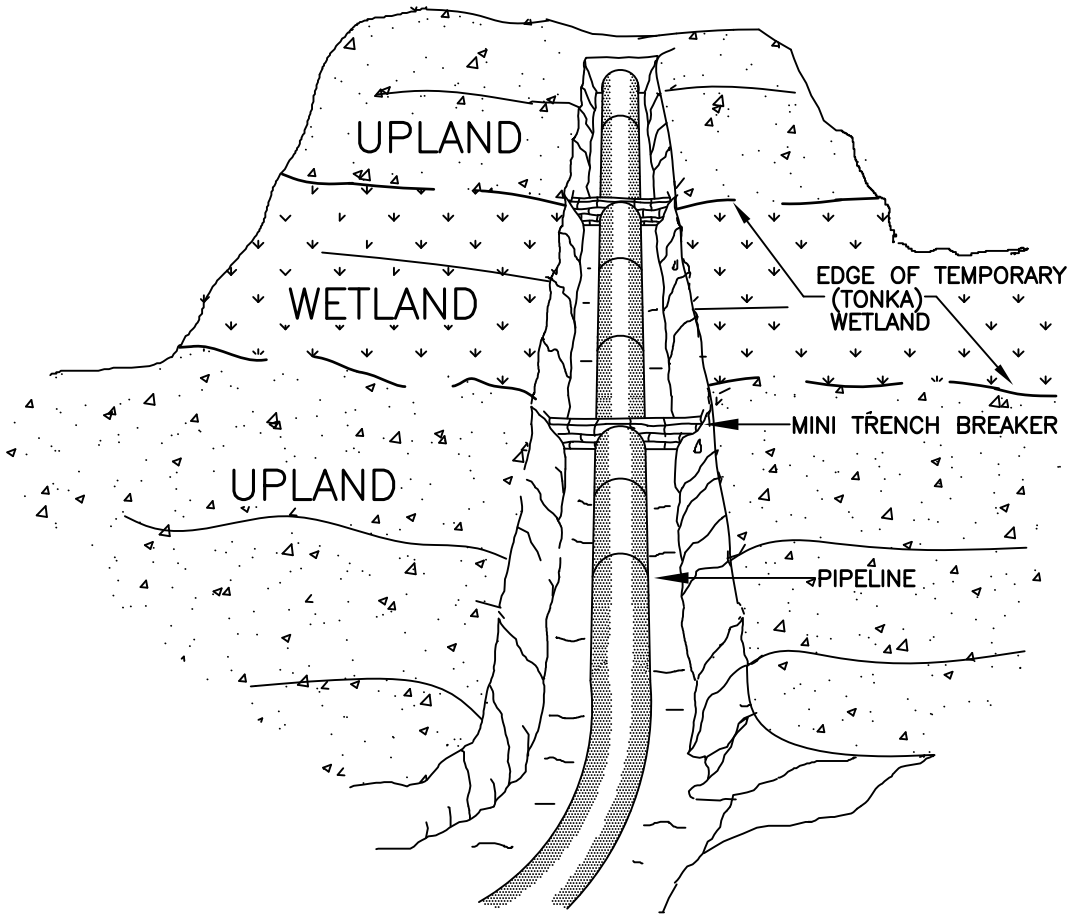

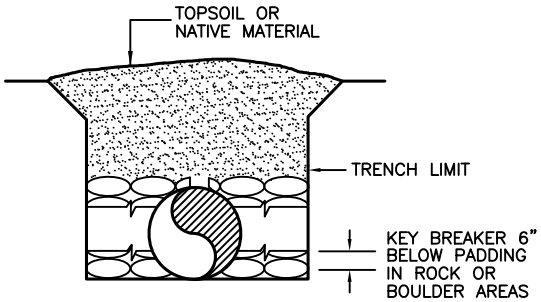

CROSS SECTION

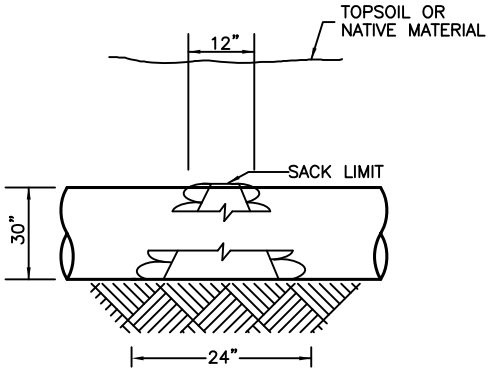

SIDE VIEW

NOTES

1. MINI–TRENCH BREAKERS SHALL BE INSTALLED AT EDGE OF EACH TEMPORARY (TONKA) WETLAND.
2. OPEN WEAVE HEMP OR JUTE SACKS SHALL BE FILLED WITH A MINIMUM OF 55lbs. OF SAND OR SUBSOIL SO THAT NATURAL GROUND WATER WILL PERMIT MIXTURE TO EXUDE AND BOND SACKS TOGETHER.
3. BREAKER CONFIGURATION MAY BE CHANGED AS DETERMINED BY TRANSCANADA ENGINEER OR SIMILARLY QUALIFIED PROFESSIONAL.

REVISIONS		
0	ISSUED FOR CONSTRUCTION	

UniversalPegasus INTERNATIONAL
TransCanada — In business to deliver

ORIGINATOR:		TITLE	
UEI (NAME)	03/30/10 (DATE)	Bison Pipeline Project BISON PIPELINE LLC TYPICAL MINI–TRENCH BREAKER (MTB)	
CHECKED BY: RG	APPROVED BY: DWA	SCALE N.T.S.	DWG No 4489–03–ML–05–008A — REV 0

TIME
DESIGNER

TB_BOR_A4

CADD DRAWING: DO NOT MAKE MANUAL REVISIONS

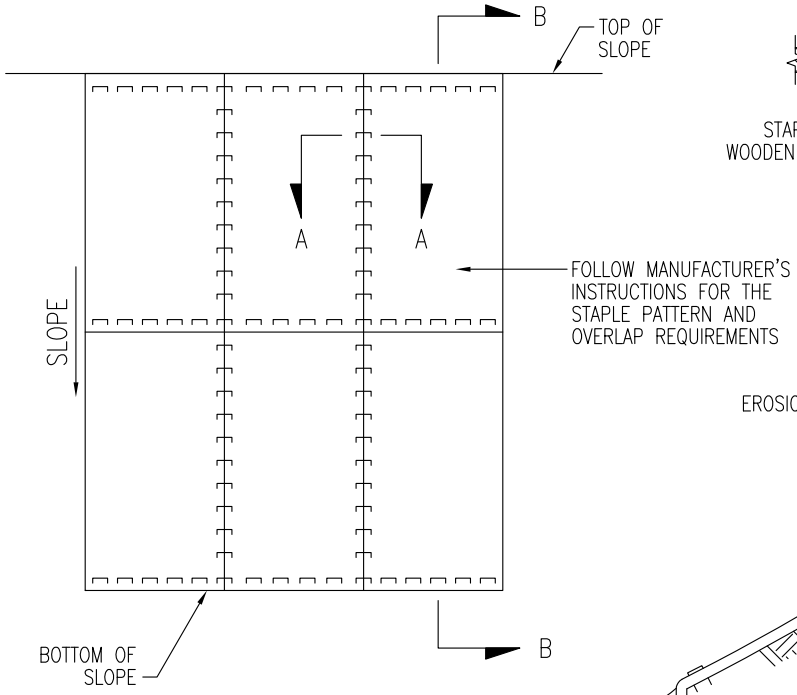

PLAN VIEW

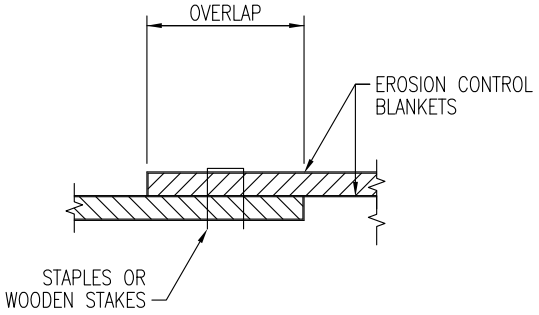

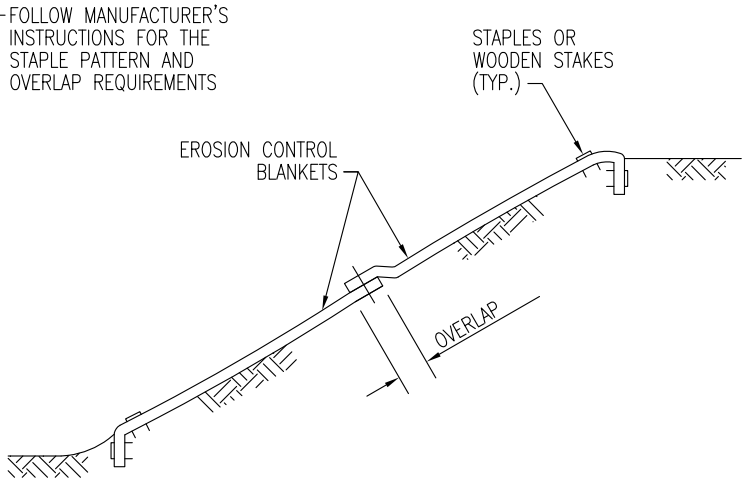

SECTION B–B

NOTES:

1. INSTALL MATTING IN ACCORDANCE WITH MANUFACTURER'S INSTRUCTIONS.
2. PREPARE SOIL BEFORE INSTALLING MATTING, INCLUDING GRADING, REMOVAL OF LARGE ROCKS, DEBRIS, THE APPLICATION OF SEED AND FERTILIZER IF NOT USING PRE–SEEDED MATTING.
3. EROSION CONTROL MATTING SHALL EXTEND COMPLETELY ACROSS DISTURBED AREAS TO PROTECT ERODEABLE SURFACES.
4. BEGIN AT THE TOP OF THE SLOPE BY ANCHORING THE MATTING IN A TRENCH. BACKFILL AND COMPACT THE TRENCH AFTER STAPLING.
5. ROLL THE MATTING DOWN THE SLOPE IN THE DIRECTION OF THE WATER FLOW.
6. AS AN ALTERNATIVE TO STAPLES, WOODEN STAKES CAN BE USED.
7. ENSURE COMPLETE CONTACT BETWEEN THE MATTING AND THE SLOPE FACE. ADDITIONAL STAPLES CAN BE USE TO ELIMINATE GAPS.
8. INSTALLATION SPECIFICATIONS TO BE MODIFIED BY THE PROJECT AS NECESSARY TO SUIT ACTUAL SITE CONDITIONS.

REVISIONS		
0	ISSUED FOR CONSTRUCTION	

I:\15304\Mapping\Typicals\Modified or Created\4489-03-ML-05-009_REV_0.dwg, 3/30/2010 6:01:32 PM

UniversalPegasus INTERNATIONAL
TransCanada In business to deliver

ORIGINATOR:		TITLE	BISON PIPELINE PROJECT
UEI (NAME)	03/30/10 (DATE)		BISON PIPELINE LLC TYPICAL EROSION CONTROL GEOTEXTILE INSTALLATION
CHECKED BY: RG	APPROVED BY: DWA	SCALE N.T.S.	DWG No 4489–03–ML–05–009 / REV 0

TB_BOR_A4

CADD DRAWING: DO NOT MAKE MANUAL REVISIONS

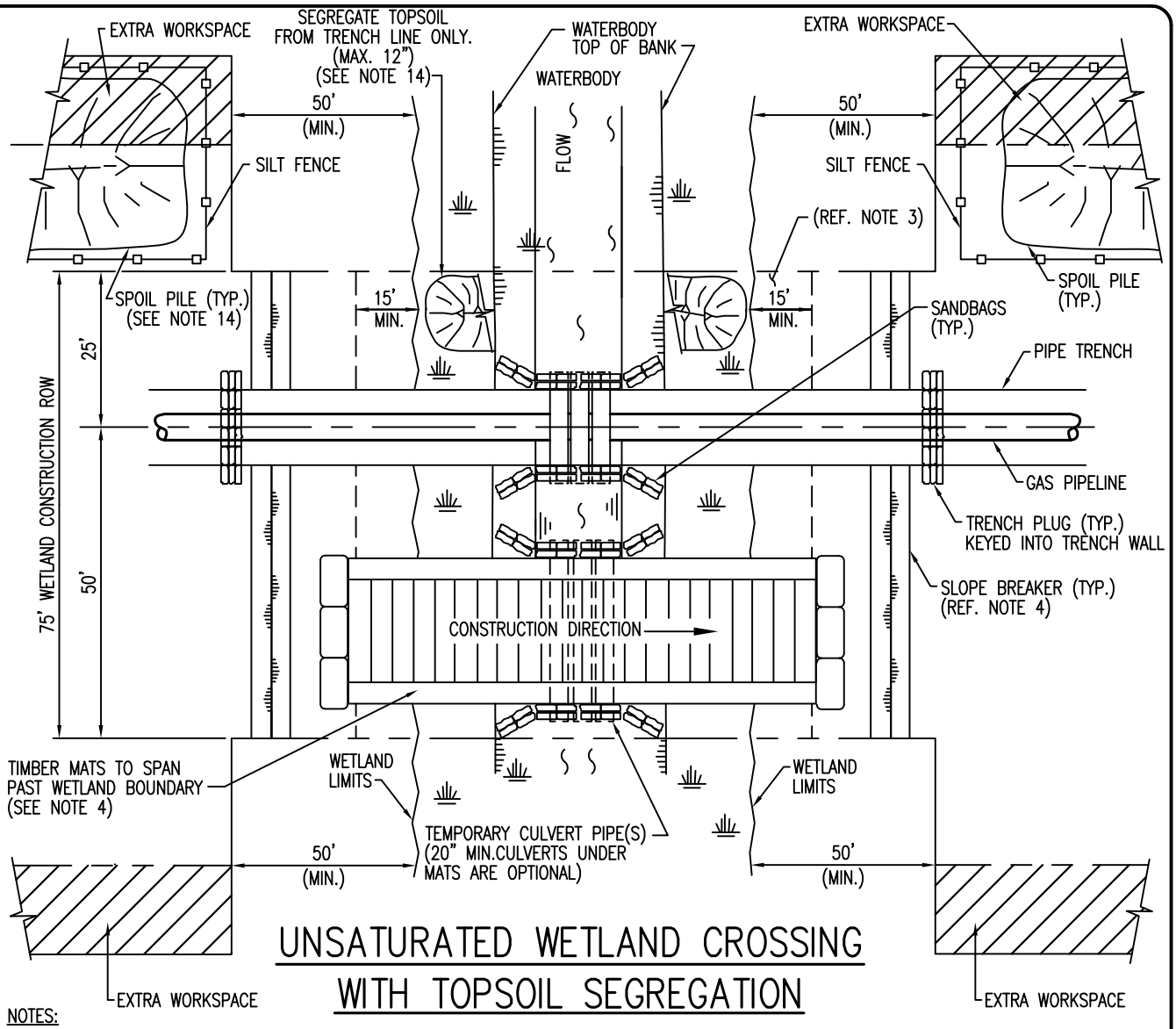

UNSATURATED WETLAND CROSSING WITH TOPSOIL SEGREGATION

NOTES:

1. THIS METHOD IS TO USED IN WETLANDS WITHOUT STANDING WATER OR SATURATED SOILS. IF A WETLAND IS BEING CULTIVATED AND BEING FARMED, NO WETLAND CONSTRUCTION PROCEDURES ARE REQUIRED.
2. FLAG BUFFER ZONES PRIOR TO CLEARING.
3. NO FUELING OR MOBILE EQUIPMENT IS ALLOWED WITHIN 100 FEET FROM BUFFER ZONE. PLACE "NO FUELING' SIGN POSTS APPROXIMATELY 100 FEET BACK FROM WETLAND BOUNDARY. REFUEL STATIONARY EQUIPMENT AS PER THE PROJECTS SPILL PREVENTION PROCEDURES.
4. INSTALL SLOPE BREAKER AT THE BASE OF ALL SLOPES ADJACENT TO THE WETLANDS OR AS DIRECTED BY THE PROJECT.
5. CONSTRUCT WHEN DRY IF POSSIBLE. IF SITE BECOMES WET AT TRENCHING, AVOID SOIL COMPACTION BY UTILIZING TIMBER RIP-RAP OR PRE-FABRICATED EQUIPMENT MATS. USE ADDITIONAL TIMBER MAT LAYERS TO RAISE CROSSING ABOVE GRADE WHERE POOR SOIL CONDITIONS EXIST AND CONDITIONS REQUIRE.
6. AVOID ADJACENT WETLANDS. INSTALL SEDIMENT BARRIERS (STRAW BALES AND/OR SILT FENCE) AT DOWN SLOPE EDGE OF right-of-way WETLAND EDGE IF EVIDENT, OTHERWISE INSTALL BARRIER ON BOTH EDGES.
7. EXCEPT FOR THE GRADED DRIVE LANE CONTRACTOR SHALL POSTPONE CLEARING IN THE BUFFER AREA ADJACENT TO WETLAND UNTIL THE STAGING AREA IS PREPARED AND WORK IN THE WETLAND IS READY TO COMMENCE. BUFFER IS A MINIMUM OF 15 FEET AND EXTENDS 15 FEET BEYOND THE EDGE OF THE RIPARIAN AREA TO A MAXIMUM OF 50 FEET.
8. RESTRICT ROOT GRUBBING TO ONLY THAT AREA OVER THE DITCH LINE AND REMOVE STUMPS FROM WETLANDS FOR DISPOSAL.
9. TRENCH THROUGH WETLANDS.
10. PIPE SECTION TO BE FABRICATED WITHIN THE WETLAND AND ADJACENT TO ALIGNMENT, OR IN EXTRA WORKSPACE OUTSIDE THE WETLAND AND WALKED IN.
11. LOWER-IN PIPE, BACKFILL TRENCH.
12. RESTORE GRADE TO PRE-CONSTRUCTION TOPOGRAPHY. REPLACE TOPSOIL AND INSTALL PERMANENT EROSION CONTROL.
13. IF UTILIZED, REMOVED TIMBER MATS OR PRE-FABRICATED MAT UPON COMPLETION.
14. SPOIL PILE STORAGE WITHIN WETLAND CONSTRUCTION ROW OVER GEOTEXTILE IS ALLOWED.

REVISIONS | 0 | ISSUED FOR CONSTRUCTION

UniversalPegasus INTERNATIONAL
TransCanada In business to deliver

ORIGINATOR:		TITLE BISON PIPELINE PROJECT	
UEI (NAME)	03/29/10 (DATE)	BISON PIPELINE LLC TYPICAL UNSATURATED WETLAND/WATERBODY CROSSING WITH TOPSOIL SEGREGATION CROSSING METHOD 1	
CHECKED BY: RG	APPROVED BY: DWA	SCALE N.T.S.	DWG No 4489-03-ML-05-013	REV 0

TB_BOR_A4

CADD DRAWING: DO NOT MAKE MANUAL REVISIONS

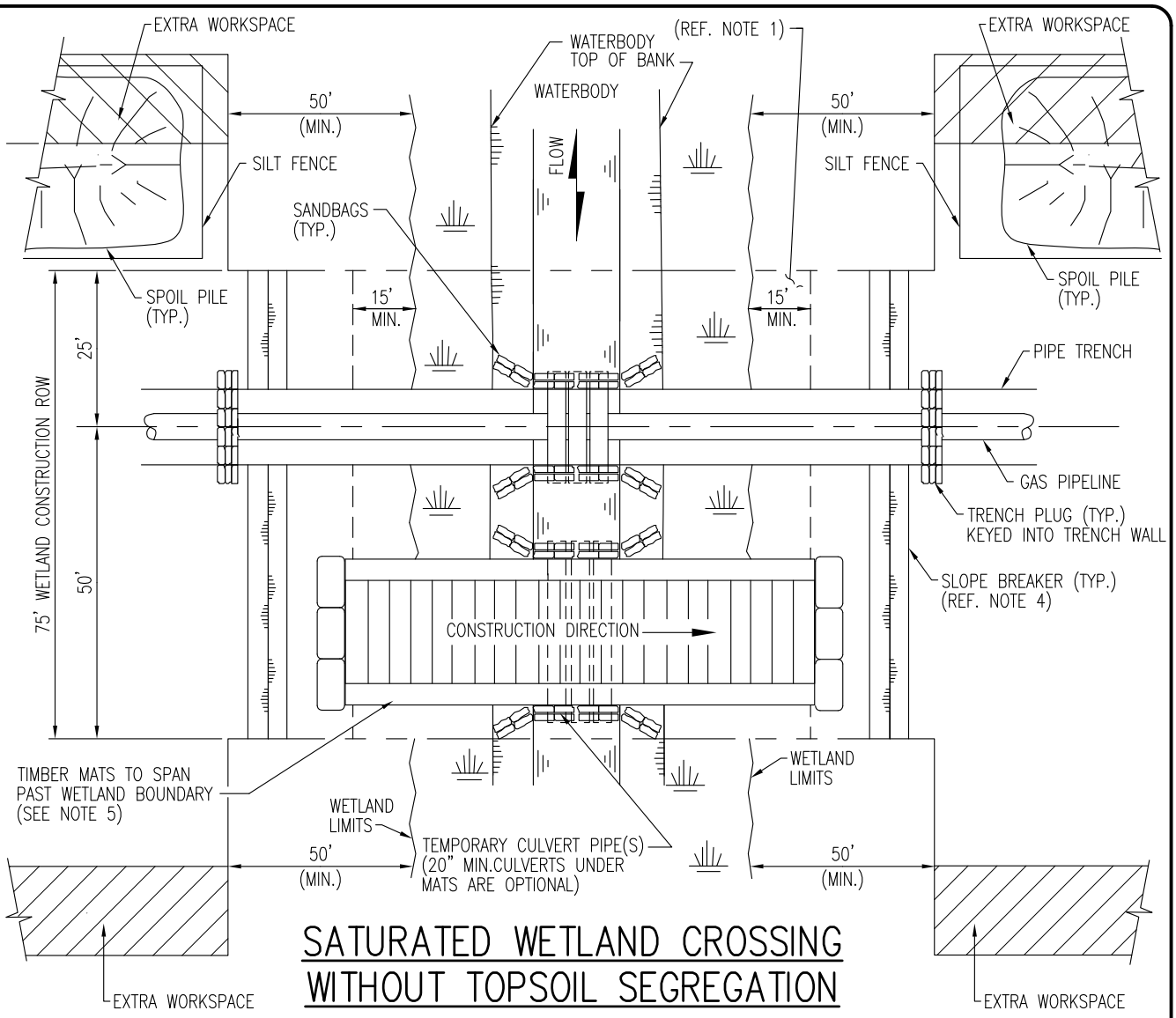

SATURATED WETLAND CROSSING WITHOUT TOPSOIL SEGREGATION

NOTES:

1. FLAG BUFFER ZONES PRIOR TO CLEARING. EXCEPT FOR THE GRADED DRIVE LANE CONTRACTOR SHALL POSTPONE CLEARING IN THE BUFFER AREA ADJACENT TO WETLAND UNTIL THE STAGING AREA IS PREPARED AND WORK IN THE WETLAND IS READY TO COMMENCE. BUFFER IS A MINIMUM OF 15 FEET AND EXTENDS 15 FEET BEYOND THE EDGE OF THE RIPARIAN AREA TO A MAXIMUM OF 50 FEET.
2. NO REFUELING OF MOBILE EQUIPMENT IS ALLOWED WITHIN 100 FEET OF BUFFER ZONE. PLACE "NO FUELING" SIGN POSTS 100 FEET BACK FROM BUFFER ZONE. REFUEL STATIONARY EQUIPMENT AS PER THE PROJECTS SPILL PREVENTION PROCEDURES.
3. INSTALL SLOPE BREAKER AT THE BASE OF ALL SLOPES ADJACENT TO THE WETLANDS.
4. INSTALL TIMBER MATS/RIPRAP THROUGH ENTIRE WETLAND AREA. EQUIPMENT NECESSARY FOR right of way CLEARING MAY MAKE ONE (1) PASS THROUGH THE WETLAND BEFORE MATS ARE INSTALLED. USE ADDITIONAL TIMBER MAT LAYERS TO RAISE CROSSING ABOVE GRADE WHERE POOR SOIL CONDITIONS EXIST.
5. AVOID ADJACENT WETLANDS INSTALL SEDIMENT BARRIERS (STRAW BALES AND/ OR SILT FENCE) AT DOWN SLOPE EDGE OF right of way AND ALONG WETLAND EDGE AS REQUIRED.
6. RESTRICT ROOT GRUBBING TO THAT ARE OVER THE DITCH LINE AND DITCH SPOIL AREAS AND REMOVED FROM WETLAND FOR DISPOSAL.
7. TOPSOIL STRIPPING SHALL NOT BE REQUIRED IN SATURATED SOIL CONDITIONS.
8. LEAVE HARD PLUGS AT EDGE OF WETLANDS UNTIL JUST PRIOR TO TRENCHING.
9. PIPE SECTION MAY BE FABRICATED WITHIN WETLAND AND ADJACENT TO ALIGNMENT OR IN EXTRA WORKSPACE OUTSIDE THE WETLAND AND WALKED IN.
10. TRENCH THROUGH WETLANDS.
11. LOWER-IN PIPE. INSTALL TRENCH PLUGS AT WETLAND EDGES AS REQUIRED AND BACKFILL IMMEDIATELY.
12. REMOVE TIMBER MATS OR PRE-FABRICATED MATS FROM WETLAND UPON COMPLETION.
13. RESTORE GRADE TO NEAR PRE-CONSTRUCTION TOPOGRAPHY. REPLACE TOPSOIL AND INSTALL PERMANENT EROSION CONTROL.

REVISIONS		
0	ISSUED FOR CONSTRUCTION	

I:\15304\Mapping\Typicals\Modified or Created\4489-03-ML-05-014_REV_0.dwg, 3/30/2010 6:15:12 PM

UniversalPegasus INTERNATIONAL
TransCanada In business to deliver

ORIGINATOR:		TITLE BISON PIPELINE PROJECT	
UEI (NAME)	03/30/10 (DATE)	BISON PIPELINE LLC TYPICAL SATURATED WETLAND/WATERBODY CROSSING WITHOUT TOPSOIL SEGREGATION CROSSING METHOD 2	
CHECKED BY: RG	APPROVED BY: DWA	SCALE N.T.S.	DWG No 4489-03-ML-05-014	REV 0

TB_BOR_A4

CADD DRAWING: DO NOT MAKE MANUAL REVISIONS

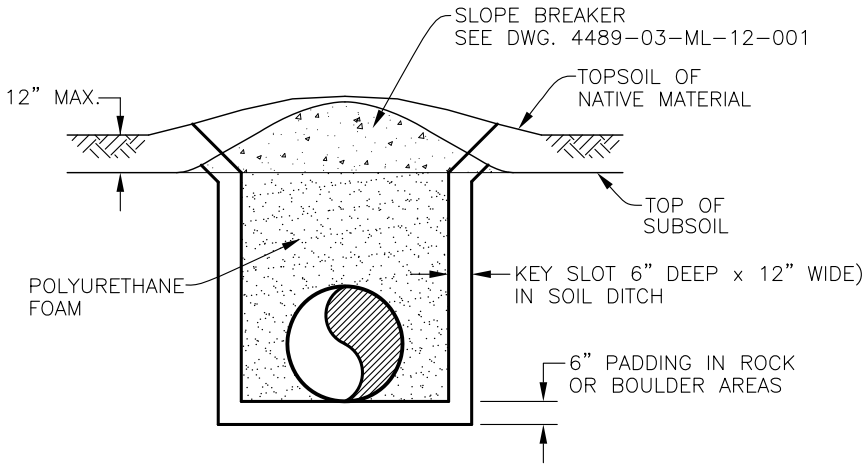

SECTION "A-A"

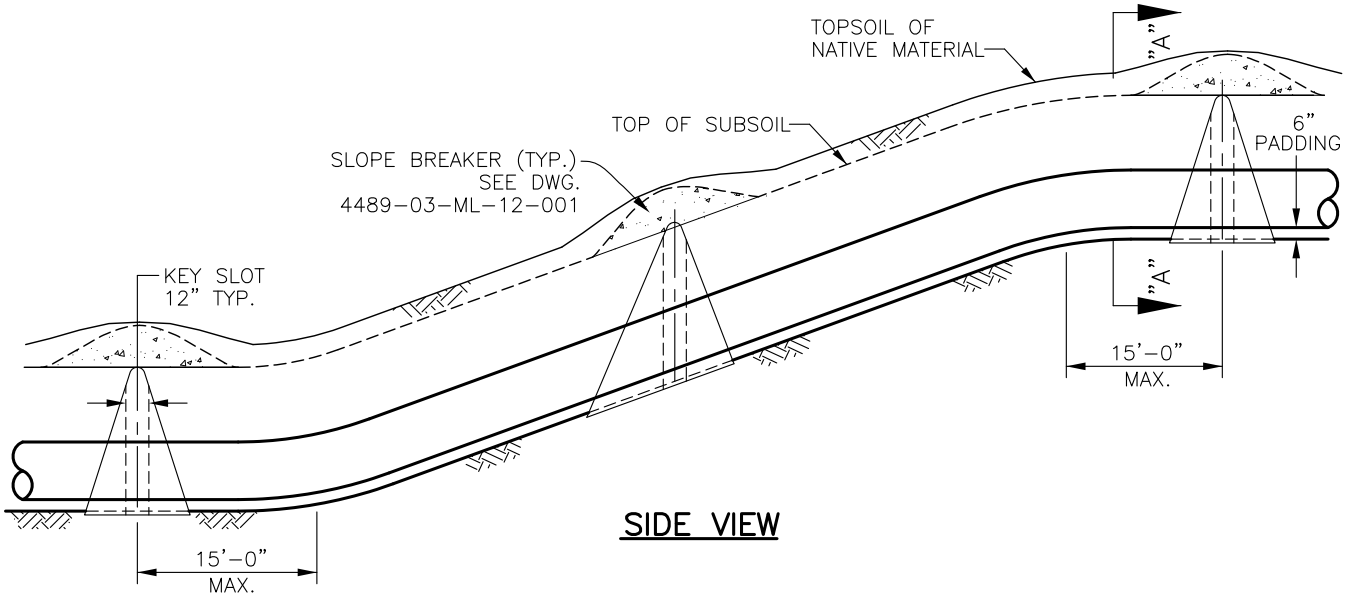

SIDE VIEW

NOTES

1. POLYURETHANE FOAM SHALL CONFORM TO ALL APPLICABLE ENVIRONMENTAL REGULATIONS CONCERNING CHEMICAL COMPOSITION.
2. FOAM WITH 2 LB./CU.FT. DENSITY AND 30 P.S.I. MINIMUM COMPRESSIVE STRENGTH OR EQUAL SHALL BE USED.
3. IF FORMING IS REQUIRED, STYROFOAM BOARD MAY BE USED.
4. TRENCH PLUGS SHALL BE INSTALLED AT SHARP CHANGES OF SLOPE ALONG TRENCH LINE WHERE THE NATURAL DRAINAGE PATTERN, PROFILE AND TYPE OF BACKFILL MATERIAL MAY RESULT IN LOSS OF BACKFILL MATERIAL OR ALTERATION OF THE NATURAL DRAINAGE PATTERN.
5. TRENCH PLUGS SPACING AND CONFIGURATION MAY BE CHANGED AS DIRECTED BY COMPANY. DEPTH OF DITCH VARIES WITH SITE CONDITIONS.
6. ALL MATERIALS SHALL BE SUPPLIED BY CONTRACTOR.
7. A SLOPE BREAKER IS TO BE PLACED TO COINCIDE WITH THE TOP OF EACH PERMANENT TRENCH PLUG.

REVISIONS | 0 | ISSUED FOR CONSTRUCTION

I:\15304\Mapping\Typicals\4489-03-ML-05-016.dwg, 3/30/2010 10:26:04 AM

UniversalPegasus INTERNATIONAL
TransCanada
In business to deliver

ORIGINATOR:		TITLE
WHH (NAME)	02/05/10 (DATE)	Bison Pipeline Project BISON PIPELINE LLC TYPICAL ENVIRONMENTAL DETAIL POLYURETHANE FOAM TRENCH PLUG
CHECKED BY: DWA	APPROVED BY: DWA	SCALE N.T.S. / DWG No 4489-03-ML-05-016 / REV 0

TIME
DESIGNER

TB_BOR_A4

CADD DRAWING: DO NOT MAKE MANUAL REVISIONS

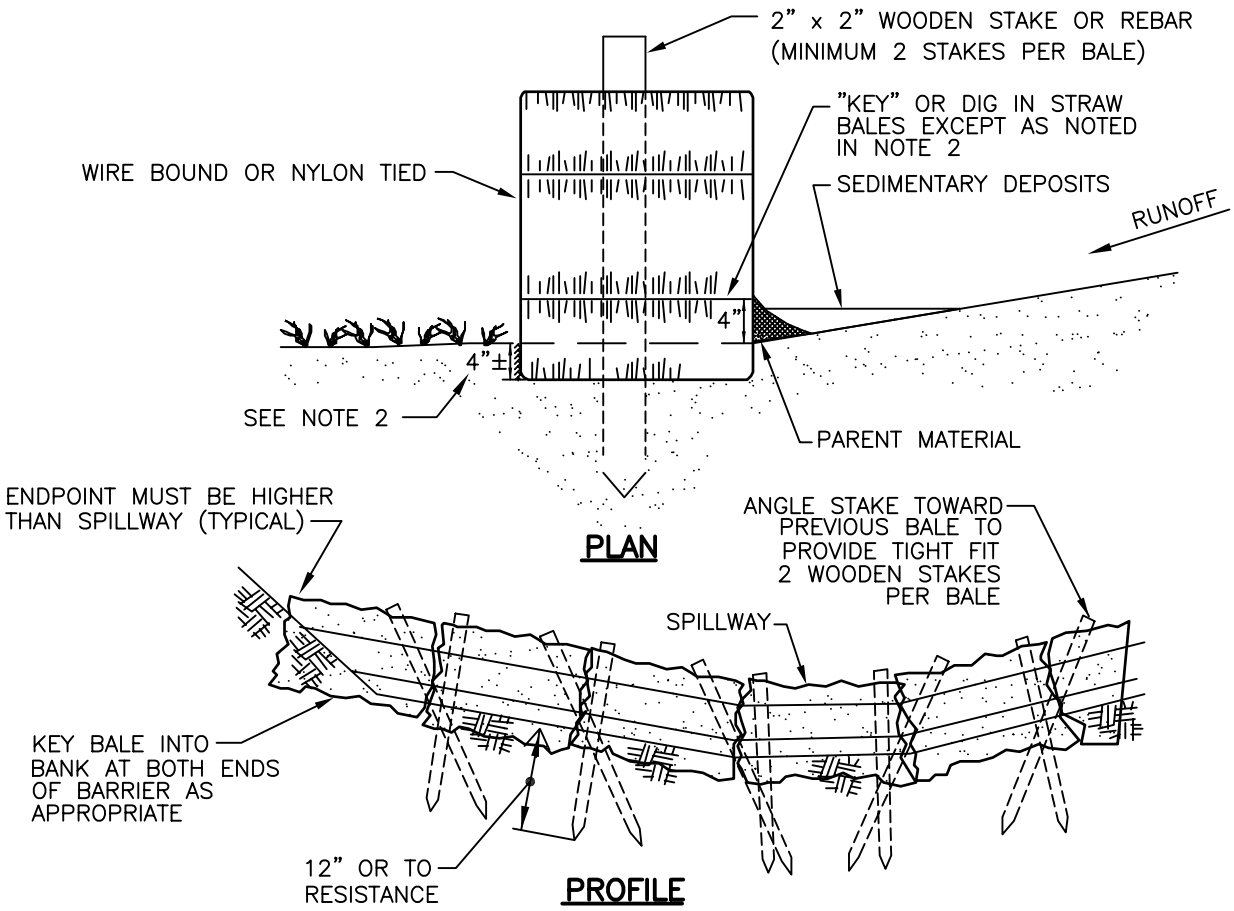

NOTES:

1. STRAW BALE SEDIMENT BARRIERS SHALL CONSIST OF A ROW OF STRAW BALES, PLACED ON THE FIBER–CUT EDGE (TIES NOT IN CONTACT WITH THE GROUND). BALES SHALL BE TIGHTLY ABUTTED TO ONE ANOTHER. THE BARRIER SHALL BE ONE BALE HIGH. ONLY CERTIFIED "NOXIOUS WEED–FREE" STRAW SHALL BE USED WHENEVER POSSIBLE.
2. ENTRENCH ("KEY") STRAW BALES INTO THE GROUND TO A DEPTH OF 4" EXCEPT IN FROZEN, SATURATED, OR EXTREMELY ROCKY SOILS. PLACE PARENT MATERIAL ON UPSTREAM SIDE OF STRAW BALES TO PREVENT UNDERMINING.
3. WALK ON STRAW BALES TO ENSURE ADEQUATE BALE–TO–SOIL CONTACT.
4. ANCHOR STRAW BALES SECURELY IN PLACE WITH TWO WOODEN OR STEEL REBAR STAKES DRIVEN THROUGH THE TOPS OF THE BALES. THE STAKES SHALL PENETRATE THE GROUND A DISTANCE OF 12" UNLESS ROCK OR AN IMPERMEABLE LAYER IS ENCOUNTERED:
   - THE FIRST, CENTER AND END BALES OF THE BARRIER SHALL HAVE STAKES DRIVEN VERTICALLY THROUGH THE BALE.
   - BALES, OTHER THAN THOSE LOCATED AT THE ENDS OR CENTER OF THE BARRIER, SHALL HAVE THE FIRST STAKE DRIVEN THROUGH THE TOP OF THE BALE AT AN ANGLE SO THAT THE STAKE PASSES THROUGH THE PREVIOUSLY PLACED BALE, IN ORDER TO PROVIDE TIGHT CONTACT BETWEEN BALES. THE SECOND STAKE SHALL BE DRIVEN VERTICALLY THROUGH THE TOP OF THE BALE.

REVISIONS | 0 | 11/12/09 ISSUED FOR CONSTRUCTION

SHEET 1 OF 2

TIME

DESIGNER

UniversalPegasus INTERNATIONAL

TransCanada In business to deliver

ORIGINATOR:		TITLE Bison Pipeline Project		
WHH (NAME)	11/12/09 (DATE)	EROSION CONTROL STRAW BALE SEDIMENT BARRIER		
CHECKED BY: DWA	APPROVED BY: DWA	SCALE N.T.S.	DWG No 4489–03–ML–05–201	REV 0

TB_BOR_A4

CADD DRAWING: DO NOT MAKE MANUAL REVISIONS

NOTES (CONTINUED):

5. PLACE STRAW BALES SO THEY ARE EFFECTIVE BUT DO NOT HINDER CONSTRUCTION. IF NECESSARY A 15' GAP IN STRAW BALE BARRIERS SHALL BE PROVIDED AS NEEDED TO ACCOMMODATE TRAFFIC ON TEMPORARY CONSTRUCTION ROADS. THE GAP SHALL BE CLOSED AT THE END OF EACH WORK DAY, USING STRAW BALE BARRIERS, OR A DRIVABLE EARTH BERM TIED INTO ADJACENT STRAW BALES. THE BALES USED TO CLOSE THE GAP SHALL BE PLACED ON THE UPHILL SIDE OF THE STRAW BALE BARRIER, THE END BALES OF THE GAP SEGMENT SHALL OVERLAP A MINIMUM OF 12".
6. MONITOR FOR UNDERMINING OR FLOW-AROUND. INSPECT BALE POSITION TO ENSURE THAT THEY REMAIN CLOSE TOGETHER. MAINTAIN STRAW BALE BARRIERS BY REPLACING DAMAGED BALES AND REMOVING SEDIMENT LOAD. WHEN SEDIMENT LOAD IS GREATER THAN 60% BEHIND THE BARRIER, SEDIMENT SHALL BE REMOVED AND PLACED IN AN AREA WHERE IT SHALL NOT REENTER THE BARRIER OR A WATERWAY. IF SEDIMENT BEHIND STRAW BALE BARRIERS CANNOT BE REMOVED, A SECOND ROW OF BALES SHALL BE INSTALLED UPSLOPE OF THE BARRIER.
7. WHERE STRAW BALES AND SILT FENCE ARE INSTALLED AS A UNIT, THE STRAW BALES SHALL BE INSTALLED ON THE DOWN SLOPE SIDE OF THE SILT FENCE.
8. EROSION CONTROL STRUCTURES SHALL BE INSPECTED DAILY IN AREAS OF ACTIVE CONSTRUCTION. STRUCTURES SHALL BE INSPECTED WEEKLY AT INACTIVE CONSTRUCTION AREAS AND WITHIN 24 HOURS OF EACH 0.5 INCH RAINFALL EVENT. STRUCTURES SHALL BE REPAIRED AS NECESSARY.
9. STRAW BALE BARRIERS SHALL BE REMOVED ONLY AS DIRECTED BY THE COMPANY INSPECTOR.

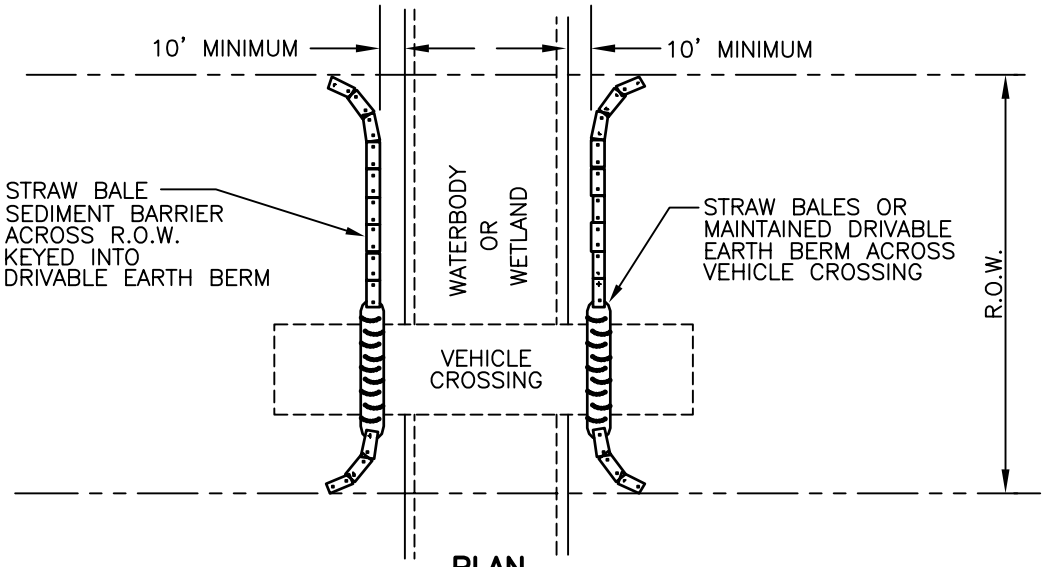

PLAN

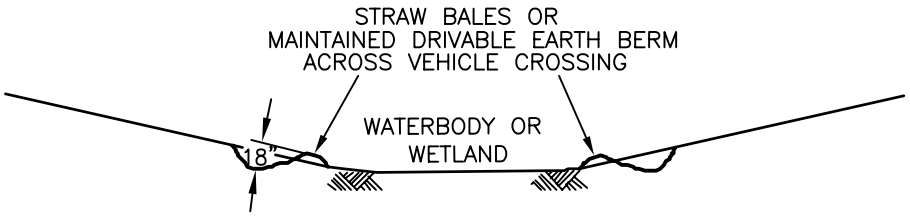

PROFILE

DRIVABLE BERM NOTES:

1. A MAINTAINED DRIVABLE EARTH BERM MAY BE INSTALLED ACROSS VEHICLE CROSSINGS IN LIEU OF STRAW BALES.
2. BERM MUST BE TIED INTO STRAW BALES.
3. BERM MUST BE MAINTAINED TO ENSURE SEDIMENT TRAPPING CAPACITY.

SHEET 2 OF 2

REVISIONS | 0 | 11/12/09 ISSUED FOR CONSTRUCTION

UniversalPegasus INTERNATIONAL
TransCanada In business to deliver

ORIGINATOR:		TITLE Bison Pipeline Project	
WHH (NAME)	11/12/09 (DATE)	EROSION CONTROL STRAW BALE SEDIMENT BARRIER	
CHECKED BY: DWA	APPROVED BY: DWA	SCALE N.T.S.	DWG No 4489-03-ML-05-201	REV 0

TIME DESIGNER

TB_BOR_A4

CADD DRAWING: DO NOT MAKE MANUAL REVISIONS

STRAW MULCH

1. STRAW MULCH SHALL BE INSTALLED AT LOCATIONS IDENTIFIED ON THE CONSTRUCTION DRAWING AND/OR AS DIRECTED BY THE COMPANY ENVIRONMENTAL INSPECTOR TO PROTECT SOIL FROM EROSION. AREAS TARGETED FOR STRAW MULCH INCLUDE THE FOLLOWING:
   - 10–40% SLOPES WITH LESS THAN 40% SURFACE COVER.
   - 0–10% SLOPES WITH SOILS RATED AS HIGH IN WIND ERODIBILITY AND LESS THAN 40% SURFACE COVER AND IF DIRECTED BY COMPANY ENVIRONMENTAL INSPECTOR.
2. WHEAT, OAT, BARLEY, RYE OR FLAX STRAW WILL BE USED, WHERE APPROPRIATE, DEPENDING UPON AVAILABILITY.
3. ONLY CERTIFIED "NOXIOUS WEED–FREE" STRAW MULCH SHALL BE APPLIED AT A RATE OF:
   - 1,780 TO 2,225 LB/AC WHEAT, OAT, BARLEY OR RYE STRAW
   - 2,670 TO 3,560 LB/AC FLAX STRAW
4. AREAS WHERE RESPREAD TOPSOIL EXHIBITS AN ADEQUATE COVER FROM RESPREAD OF PLANT DEBRIS AND COARSE FRAGMENTS, MULCH RATES MAY BE REDUCED OR ELIMINATED BY THE COMPANY ENVIRONMENTAL INSPECTOR.

STRAW CRIMPING

1. STRAW CRIMPING WILL BE UTILIZED ON NONCULTIVATED, WIND EROSION PRONE SOILS, AND ON CULTIVATED, WATER EROSION PRONE SOILS AS IDENTIFIED ON THE ALIGNMENT SHEETS, UNLESS OTHERWISE DIRECTED BY THE COMPANY ENVIRONMENTAL INSPECTOR. STRAW CRIMPING AT ADDITIONAL LOCATIONS IDENTIFIED BY THE COMPANY ENVIRONMENTAL INSPECTOR MAY BE REQUIRED.
2. EQUIPMENT SPECIFICALLY DESIGNED TO CRIMP STRAW (SUCH AS A STRAW MULCH CRIMPER MANUFACTURED BY FINN CORPORATION OR AN APPROVED EQUIVALENT) SHALL BE USED TO CRIMP STRAW FIBERS TO A DEPTH OF TWO TO THREE INCHES. STEEP SLOPES INACCESSIBLE WITH A CRIMPER SHALL BE CRIMPED BY TRACKING WITH A CRAWLER RUNNING PERPENDICULAR TO THE SLOPE. DISCS SHALL NOT BE ALLOWED FOR CRIMPING EXCEPT AS STATED IN NOTE 3.
3. WHERE EXCESSIVE STONINESS IS ENCOUNTERED TO THE EXTENT THAT THE SPECIALIZED CRIMPING EQUIPMENT IS NOT USEABLE, ATTEMPT TO ANCHOR THE STRAW BY INCORPORATION WITH AN AGRICULTURAL DISC OR CULTIVATOR. WHERE FROZEN GROUND CONDITIONS ARE ENCOUNTERED TO THE EXTENT THAT THE CRIMPING OPERATION IS NOT FEASIBLE, SPREAD STRAW AT DOUBLE THE NORMAL RATE.
4. CRIMP OR ANCHOR STRAW INTO THE SOIL TO AN APPROXIMATE DEPTH OF 2". STRAW SHOULD STAND VERTICALLY 2" TO 8" OUT OF THE GROUND IN ROWS SPACED APPROXIMATELY 6" APART.
5. IN HIGHLY ERODIBLE SANDY LOCATIONS, WHERE DIRECTED BY THE COMPANY ENVIRONMENTAL INSPECTOR, DOUBLE THE STRAW APPLICATION RATE AND MAKE TWO PASSES TO ANCHOR THE STRAW, ONE PASS PERPENDICULAR TO THE OTHER OR CRISS–CROSSED.
6. STRAW FOR CRIMPING WILL BE APPROVED BY COMPANY AND THE LANDOWNERS AND OCCUPANTS OR APPROPRIATE REGULATORY AUTHORITIES WHERE APPLICABLE. CRITERIA FOR THE SELECTION OF STRAW ARE AS FOLLOWS:
   - FOR EACH LOT OF BALES, TO THE EXTENT FEASIBLE, THE FIELD WHERE THE BALES WERE OBTAINED WILL BE INSPECTED BEFORE IT IS HARVESTED, OR THE STUBBLE WILL BE INSPECTED IMMEDIATELY AFTER HARVEST AND A SAMPLE OF GRAIN WILL BE INSPECTED FOR WEED SEEDS.
   - THE STRAW MUST HAVE BEEN HARVESTED WITH A CONVENTIONAL COMBINE, NOT A ROTARY COMBINE.
   - THE STRAW MUST HAVE A MINIMUM FIBRE LENGTH OF 8", 12" IS PREFERRED.
   - THE STRAW MUST BE FREE OF NOXIOUS OR RESTRICTED WEEDS AND UNDESIRABLE SPECIES WHICH WOULD HAMPER RECLAMATION EFFORTS.
   - TO THE EXTENT FEASIBLE, BALES OBTAINED FROM LOW LYING WEEDY AREAS WILL BE IDENTIFIED AND AVOIDED.

REVISIONS | 0 | 11/12/09 ISSUED FOR CONSTRUCTION

I:\15304\Mapping\Typicals\IFC\4489-03-ML-05-203.dwg, 4/1/2010 2:43:48 PM

UniversalPegasus INTERNATIONAL
TransCanada In business to deliver

ORIGINATOR:		TITLE	Bison Pipeline Project		
WHH (NAME)	11/12/09 (DATE)		EROSION CONTROL STRAW MULCH		
CHECKED BY: DWA	APPROVED BY: DWA	SCALE N.T.S.	DWG No 4489–03–ML–05–203		REV 0

TIME ---------- DESIGNER

TB_BOR_A4

CADD DRAWING: DO NOT MAKE MANUAL REVISIONS

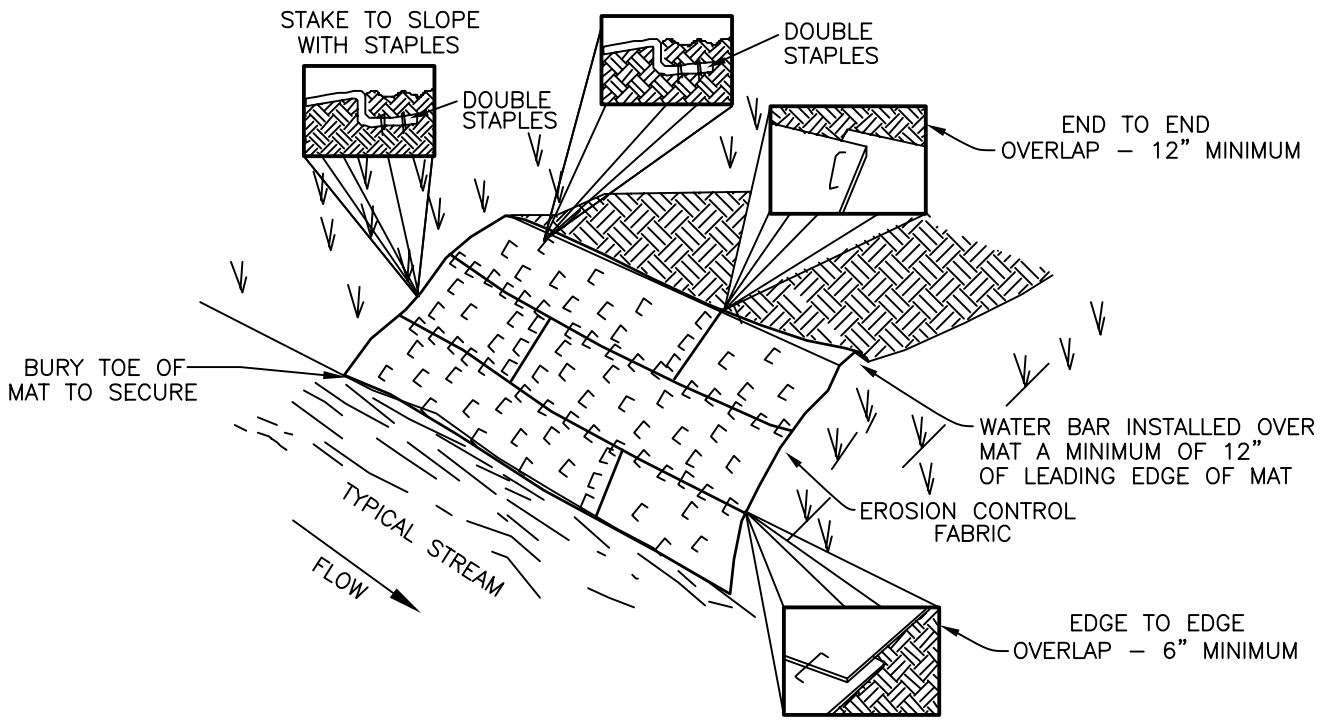

NOTES:

1. EROSION CONTROL MATTING (BLANKETS) SHALL BE PLACED ON THE BANKS OF ALL WATER BODIES WHERE VEGETATION HAS BEEN REMOVED AND/OR AS DIRECTED BY THE COMPANY ENVIRONMENTAL INSPECTOR.
2. THE EROSION CONTROL MAT SHALL BE MADE OF BIODEGRADABLE NATURAL FIBERS, UNLESS OTHERWISE APPROVED BY THE COMPANY ENVIRONMENTAL INSPECTOR. EROSION CONTROL MATS SHALL BE FURNISHED IN CONTINUOUS ROLLS OF 30' OR GREATER WITH A MINIMUM WIDTH OF 4'.
3. THE EROSION CONTROL MAT SHALL BE BON TERRA CF7 OR AN COMPANY APPROVED EQUIVALENT WITH THESE SPECIFICATIONS:
   - 100% WOVEN COCONUT (COIR) FABRIC.
   - WEIGHT OF 1.2 LBS/YD^2.
   - 50% OPEN AREA.
4. STAPLES SHALL BE MADE OF 11 GAUGE WIRE, U–SHAPED WITH 6" LEGS AND A 1" CROWN. STAPLES SHALL BE DRIVEN INTO THE GROUND FOR THE FULL LENGTH OF THE STAPLE LEGS. LONGER STAPLES MAY BE REQUIRED IN LOOSE OR SANDY SOILS.
5. MATTING SHALL BE INSTALLED ACCORDING TO MANUFACTURE SPECIFICATIONS OR AS STATED BELOW:
   - THE TOP OF THE BLANKET SHALL EXTEND 2' PAST THE UPPER EDGE OF THE HIGH WATER MARK. IF A SLOPE BREAKER IS PRESENT ON THE APPROACH SLOPE, THE BLANKET SHALL EXTEND OVER THE CREST AND THE TROUGH OF THE SLOPE BREAKER.
   - INSTALL BLANKET(S) ACROSS THE SLOPE IN THE DIRECTION OF WATER FLOW.
   - ANCHOR ("KEY") THE UPSTREAM EDGE OF THE UPPER BLANKET(S) INTO THE SLOPE USING A 6" WIDE BY 6" DEEP TRENCH. DOUBLE STAPLE EVERY 12" BEFORE BACKFILLING AND COMPACTING TRENCH.
   - ANCHOR ("KEY") THE UPPER EDGE OF THE UPPER BLANKET INTO THE SLOPE IN A 6" WIDE BY 6" DEEP TRENCH. DOUBLE STAPLE EVERY 12" BEFORE BACKFILLING AND COMPACTING TRENCH.
   - THE EDGES OF PARALLEL BLANKETS SHALL BE OVERLAPPED A MINIMUM OF 6". THE UPPER BLANKET SHALL BE PLACED OVER THE LOWER BLANKET (SHINGLE STYLE) AND STAPLED EVERY 12" THE LENGTH OF THE EDGE.
   - WHEN BLANKET ENDS, THE UPSTREAM BLANKET SHALL BE PLACED OVER THE DOWNSTREAM BLANKET (SHINGLE STYLE) WITH AT LEAST 12" OF OVERLAP. STAPLE THROUGH THE OVERLAPPED AREA EVERY 12".
   - STAPLE DOWN THE CENTER OF THE BLANKET(S) WITH THREE STAPLES IN EVERY SQUARE YARD.
   - STAPLE ACROSS THE BOTTOM OF THE EROSION CONTROL MATTING EVERY 12".
6. THE EROSION CONTROL MATTING SHALL MAKE UNIFORM CONTACT WITH THE SOIL UNDERNEATH WITH NO BRIDGING OF RILLS OR GULLIES.
7. MONITOR FOR WASHOUTS, STAPLE INTEGRITY OR MAT MOVEMENT PRIOR TO COMPLETION OF CONSTRUCTION. REPLACE OR REPAIR AS NECESSARY.

REVISIONS		
0	11/12/09	ISSUED FOR CONSTRUCTION

ID

TIME

DESIGNER

UNIVERSAL ENSCO, INC.

TransCanada — In business to deliver

ORIGINATOR:		TITLE	Bison Pipeline Project
WHH (NAME)	11/12/09 (DATE)		EROSION CONTROL MATTING STREAMBANKS
CHECKED BY: DWA	APPROVED BY: DWA	SCALE N.T.S.	DWG No 4489–03–ML–05–204 REV 0

TB_BOR_A4

CADD DRAWING: DO NOT MAKE MANUAL REVISIONS

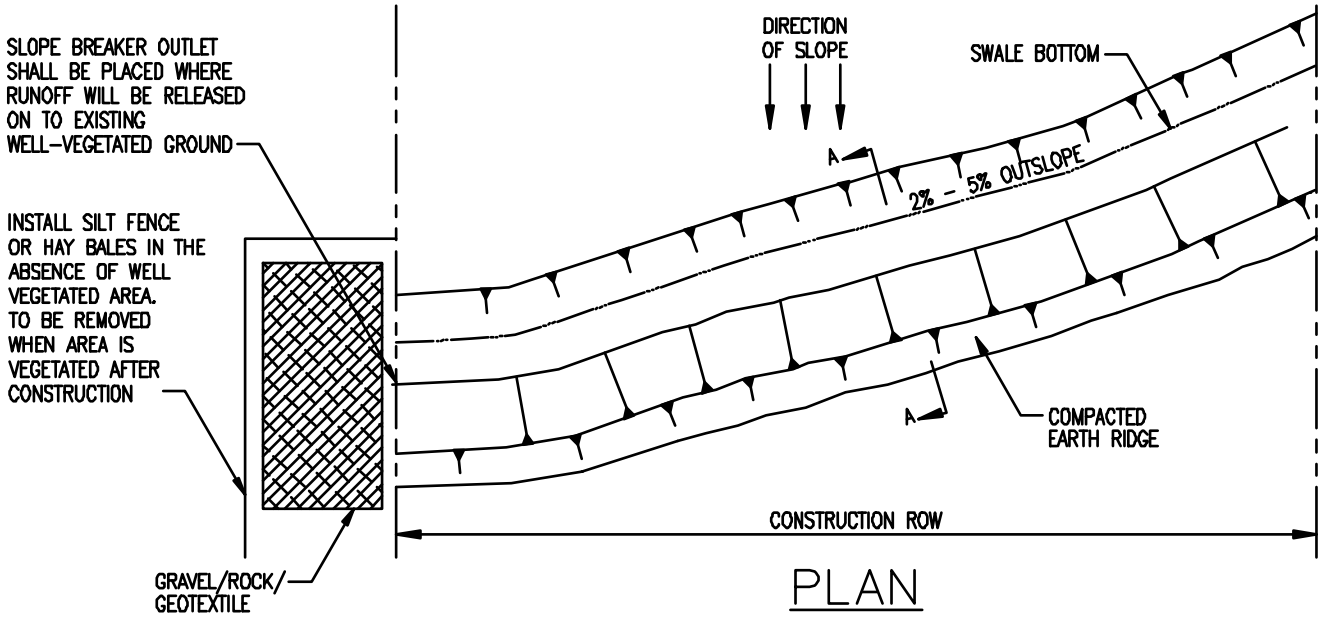

PLAN

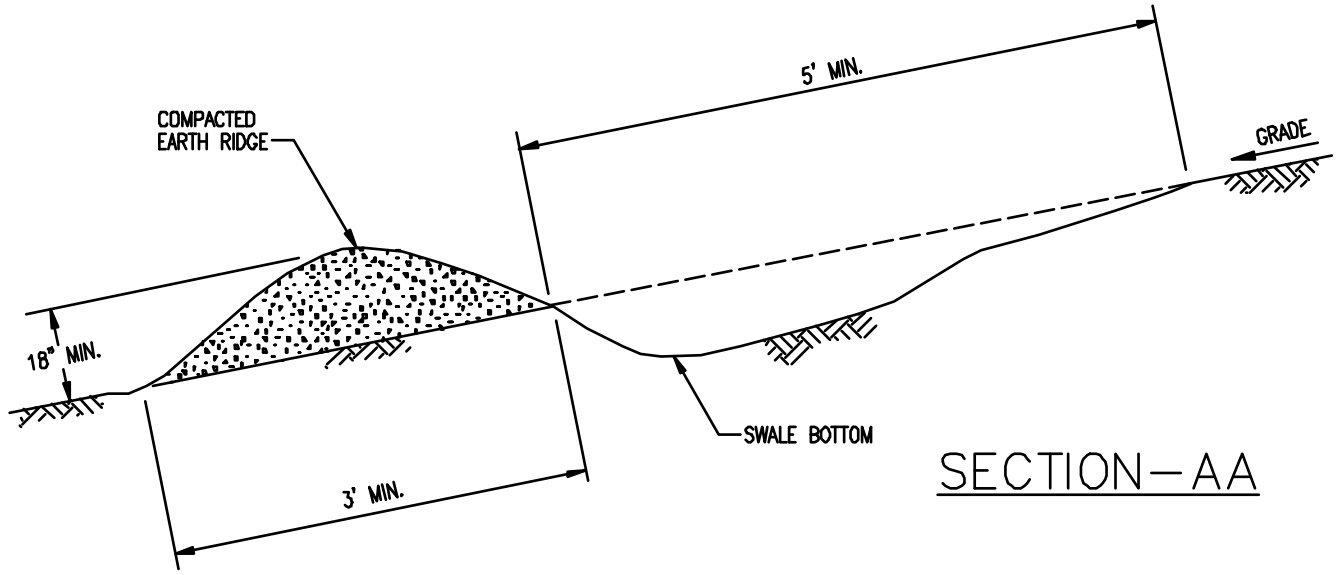

SECTION-AA

TYPICAL SLOPE BREAKER

NOTES:
1. PERMANENT SLOPE BREAKER SHALL BE INSTALLED AT THE BASE OF SLOPES ADJACENT TO WATERBODIES AND WETLANDS DURING FINAL GRADING.
2. PERMANENT SLOPE BREAKER SHALL BE INSTALLED PER THE SPACING REQUIREMENTS IN "TABLE 1" AND AS PART OF FINAL GRADING.
3. PERMANENT SLOPE BREAKER SHALL BE INSTALLED AT ALL TRENCH PLUG LOCATIONS.

TABLE 1	
SLOPE (%)	SPACING (FEET)
0 - 5	0
5 - 15	300
>15 - 30	200
>30	100

REVISIONS | 0 | ISSUED FOR CONSTRUCTION

I:\16304\Mapping\Typicals\4489-03-ML-12-001_REV_0.dwg, 3/31/2010 4:02:49 PM

TIME DESIGNFILE

UniversalPegasus INTERNATIONAL
TransCanada In business to deliver

ORIGINATOR: UEI (NAME) 03/31/10 (DATE)
CHECKED BY: DWA
APPROVED BY: DWA

TITLE
Bison Pipeline Project
BISON PIPELINE LLC
PERMANENT SLOPE BREAKER

SCALE N.T.S.
DWG No 4489-03-ML-12-001
REV 0

TB_BOR_A4

CADD DRAWING: DO NOT MAKE MANUAL REVISIONS

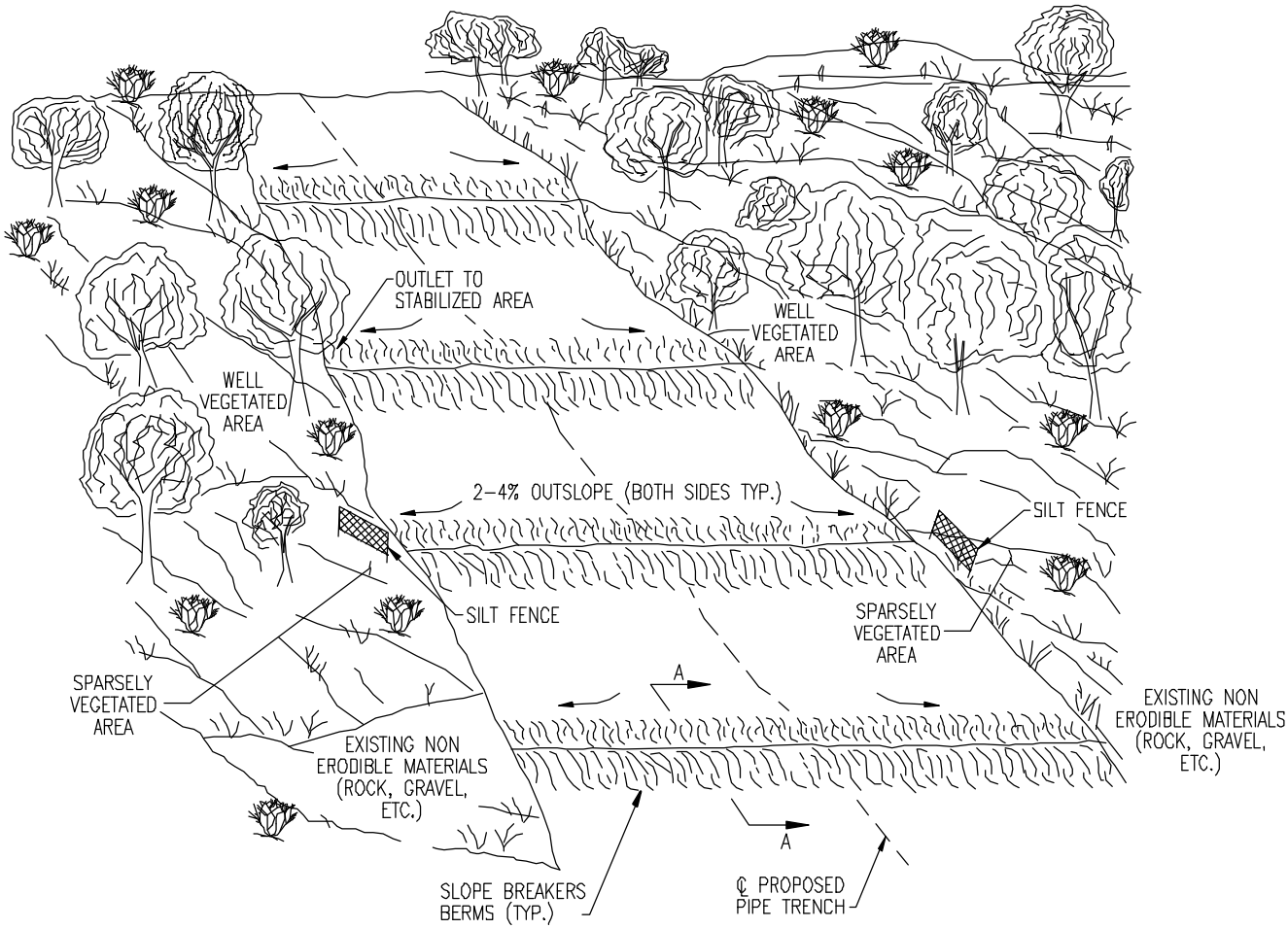

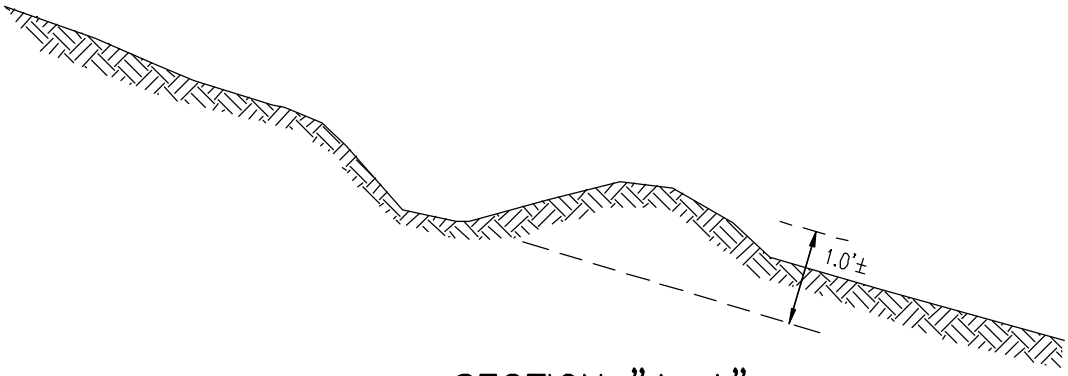

SECTION "A-A"

REVISIONS 0 ISSUED FOR CONSTRUCTION

I:\16304\Mapping\Typicals\4489-03-ML-12-002_REV_0.dwg, 3/30/2010 12:24 AM

UniversalPegasus INTERNATIONAL

TransCanada *in business to deliver*

ORIGINATOR:		TITLE	BISON PIPELINE PROJECT BISON PIPELINE LLC TYPICAL SLOPE BREAKERS TEMPORARY	
UEI (NAME)	03/30/10 (DATE)			
CHECKED BY: RG	APPROVED BY: DWA	SCALE N.T.S.	DWG No 4489-03-ML-12-002	REV 0

TB_BOR_A4

CADD DRAWING: DO NOT MAKE MANUAL REVISIONS

PLAN VIEW

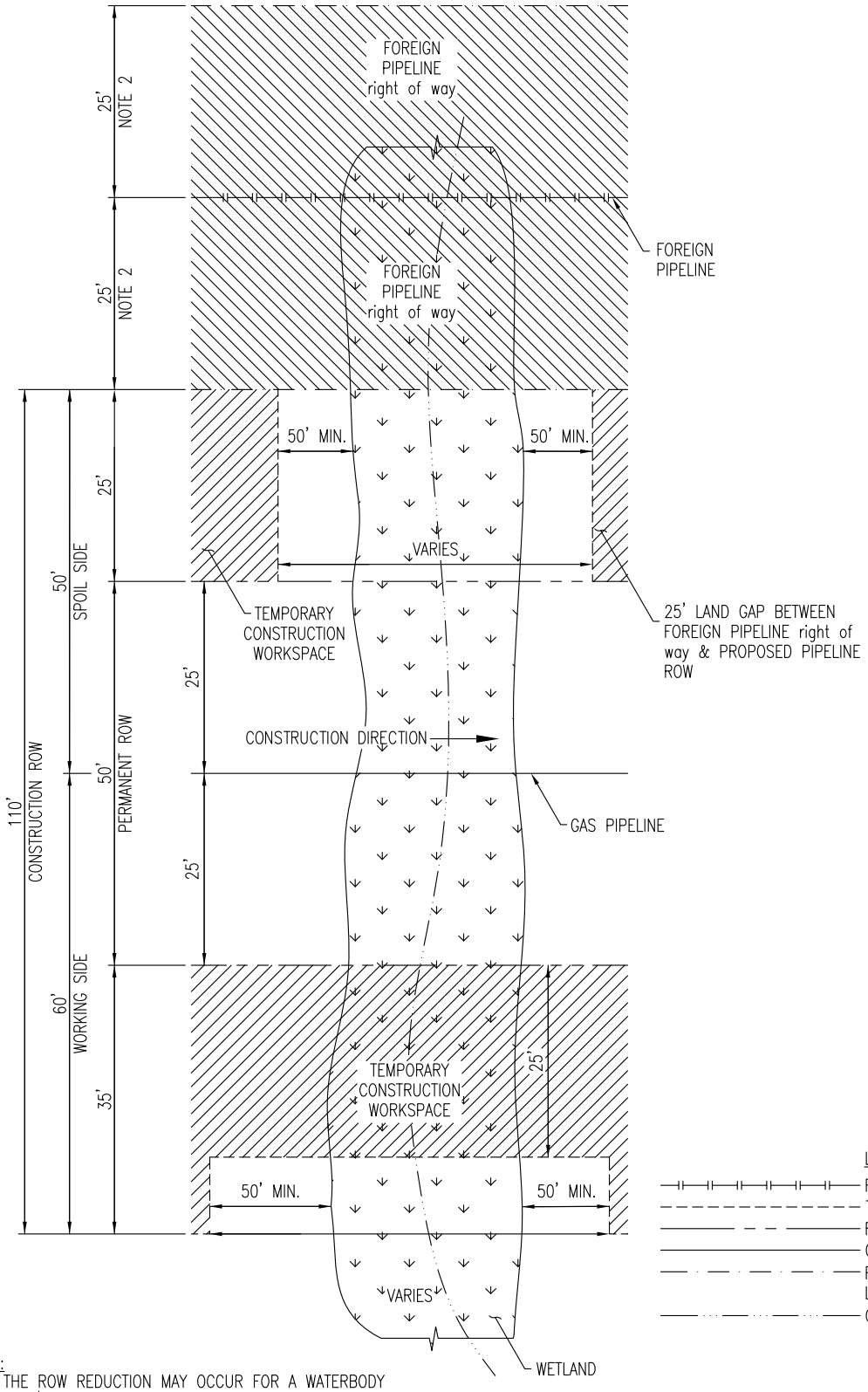

LEGEND

- FOREIGN PIPELINE
- TEMPORARY WORKSPACE LIMITS
- ROW LIMITS
- GAS PIPELINE
- FOREIGN PIPELINE right of way LIMITS
- CENTERLINE OF WATERBODY

NOTE:
1. THE ROW REDUCTION MAY OCCUR FOR A WATERBODY AND/OR WETLAND.
2. FOR A WATERBODY, THE NECKDOWN WILL BEGIN/END 50' FROM THE TOP OF BANK.

DETAIL AB

REVISIONS | 0 | ISSUED FOR CONSTRUCTION

I:\15304\Mapping\Typicals\IFC\A9029-00-03-BI-SK-106_REV_0.dwg, 3/31/2010 4:23:26 PM

UniversalPegasus INTERNATIONAL
TransCanada In business to deliver

ORIGINATOR:		TITLE BISON PIPELINE PROJECT	
UEI (NAME)	03/29/10 (DATE)	BISON PIPELINE LLC PLAN VIEW ADJACENT TO WILLISTON BASIN INTERSTATE PIPELINE (1) WETLAND ACROSS ROW	
CHECKED BY: RG	APPROVED BY: DWA	SCALE N.T.S.	DWG No A9029-00-03-BI-SK-106	REV 0

TB_BOR_A4

CADD DRAWING: DO NOT MAKE MANUAL REVISIONS

APPENDIX C

TRANSCANADA GENERAL MITIGATION GUIDELINES

Prepared for:
Bison Pipeline LLC

Upland Erosion Control, Revegetation, and Maintenance Plan

AECOM, Inc.
March 2010
Document No.: 60138067

AECOM

Upland Erosion Control, Revegetation, and Maintenance Plan

This document is based on FERC Document: Upland Erosion Control, Revegetation, and Maintenance Plan - 01/17/2003 version, which has been adopted for use in its entirety by Bison with the exception of the modifications identified in the following table. Modifications to this Document since October 2009, including changes in the Rationale, are listed in this table in underlined text. These modifications reflect changes that were not present in this Document during FERC's Final Environmental Impact Statement (EIS) analysis.

Revisions to FERC Document: Upland Erosion Control, Revegetation, And Maintenance Plan		
Found In:	**Information**	**Rationale**
I.A	Added statement that site-specific variations to this Plan may be submitted for review and written approval.	Clarify that site-specific variation to this Plan may be submitted to the relevant agency (ies) for review and written approval.
I.A	Added references to Bison Reclamation Plan, Agricultural Mitigation Plan, and Wetland Restoration Plan.	Bison's Reclamation Plan provides information about BLM-required treatment of BLM lands that conflicts with this Plan. The Agricultural Mitigation and Wetland Restoration Plans provide additional details that are not provided in this plan and that are related to restoration of agricultural lands and wetlands.
II .B. 4	Added "riparian areas" to areas in which will require flagging.	BLM request.
II.B.8	Compaction testing requirement for agricultural and residential lands removed. Decompaction testing requirement added for BLM lands in Wyoming.	Bison will decompact along the entire route: therefore no compaction testing required. BLM Wyoming requested compaction testing on their lands.
IV.A.2	Changed 75 feet to 120 feet.	Bison is requesting a 120 foot Construction ROW.
IV.A.2	Changed "weekly or biweekly construction reports…"	Bison will submit weekly construction reports to FERC.
IV.B.1	Revised text to working side, the trench and a portion of the spoil storage areas (approximately 85 feet of the Construction ROW), with the exception of areas that will be used for topsoil or snow storage, or for a proposed brush beating demonstration area in Carter County, Montana, between approximate MPs 136.16 and 137.33, where the topsoil will only be stripped over the ditch and area of the ditch spoil pile.	Consistent with the Project construction plan.
IV.B.3	Added text describing topsoil segregation practices on lands managed by the North Dakota State Land Department.	North Dakota State Land Department request.
IV.F.3.b	Montana BLM's requirements regarding mulch limitations added.	BLM request. BLM/landowner request, due to potential adverse effects of binding materials on livestock.
IV.F.3.e	Revised to reflect BLM preference for no fertilizer "BLM does not recommend fertilizer due to enhanced competition from weeds."	BLM request.

Revisions to FERC Document: Upland Erosion Control, Revegetation, And Maintenance Plan		
Found In:	**Information**	**Rationale**
V.A.1	Added the following statement: "Should Bison require site-specific exceptions to this timeframe that would result in a delay of restoration; Bison will submit such exceptions for FERC's review and written approval."	Based upon comments provided by FERC as part of the Final Environmental Impact Statement for the Bison Project, Bison will adhere to the restoration timeframes stated in FERC's Plan, and will request approval for any necessary delays in restoration that may be required on a site-specific basis.
V.A.4	Added "remove excess rock greater than 3 inches in diameter…"	Consistent with the Project construction plan.
V.C.1	Altered language referring to soil compaction testing.	Consistent with Bison's Reclamation Plan.
V.C.2	Altered language referring to soil compaction testing.	Soil compaction mitigation and decompaction procedures have been updated based upon BLM consultations.
V.C.3	Removed "paraplow or other". Revised statement to reflect that Bison will decompact along entire route using a deep tillage implement prior to replacement of segregated topsoil.	Paraplow was removed due to difficulty in trying to find this equipment. Other language added to clarify Bison's plan for decompaction.
V.D.3.a	Revised language regarding seedbed preparation and seeding methods. Added reference to Bison's Reclamation Plan.	Revised to make this plan consistent with Bison's Reclamation Plan. Additional details (not provided in this document) pertaining to revegetation are provided in Bison's Reclamation Plan.
V.D.3.d	Added the following statement: "Should Bison require site-specific exceptions to this timeframe that would result in a delay of restoration; Bison will submit such exceptions for FERC's review and written approval."	Based upon comments provided by FERC as part of the Final Environmental Impact Statement for the Bison Project, Bison will adhere to the restoration timeframes stated in FERC's Plan, and will request approval for any necessary delays in restoration that may be required on a site-specific basis.
V.D.3.g	Deleted redundant information on seed application.	Redundant after additional language inserted into Section V.D.3.a.
VI	Added a site-specific plan for areas where previous projects' restoration has not been deemed successful.	BLM Request.
VIII.A.2	Added language to address restoration on BLM-managed lands. On BLM-managed lands, the requirements of Bison's Reclamation Plan will be used to help define reclamation (revegetation) success.	Refer the reader to the Reclamation Plan to comply with BLM requests.
VIII.A.5	Revised language regarding maintenance of vegetation.	At request of FERC.

The modifications identified above are highlighted with **bolded text** in the body of this report. This document, with the FERC-approved modifications listed, will be known as Bison's Plan.

Upland Erosion Control, Revegetation, and Maintenance Plan

CONTENTS

I. Applicability 1
II. Supervision and Inspection 2
A. Environmental Inspection 2
B. Responsibilities of Environmental Inspectors 2
III. Preconstruction Planning 3
A. Construction Work Areas 3
B. Drain Tile and Irrigation Systems 3
C. Grazing Deferment 4
D. Road Crossing and Access Points 4
E. Disposal Planning 4
F. Agency Coordination 4
G. Stormwater Pollution Prevention Plan 4
IV. Installation 5
A. Approved Areas of Disturbance 5
B. Topsoil Segregation 5
C. Drain Tiles 6
D. Irrigation 6
E. Road Crossings and Access Points 6
F. Temporary Erosion Control 7
V. Restoration 8
A. Cleanup 8
B. Permanent Erosion Control Devices 9
C. Soil Compaction Mitigation 10
D. Revegetation 11
VI. Site Specific Plans 12
VII. Off-Road Vehicle Control 12
VIII. Post-Construction Activities 13
A. Monitoring and Maintenance 13
B. Reporting 13
References 14

Upland Erosion Control, Revegetation, and Maintenance Plan (Plan)

I. Applicability

A. **Site-specific variations to this Plan may be submitted for review and written approval.**

The intent of this Plan is to assist applicants by identifying baseline mitigation measures for minimizing erosion and enhancing revegetation. The project sponsors should specify in their applications for a FERC Certificate (Certificate) any individual measures in this Plan they consider unnecessary, technically infeasible, or unsuitable due to local conditions and to fully describe any alternative measures they would use. Applicants should also explain how those alternative measures would achieve a comparable level of mitigation.

Once a project is certificated, further changes can be approved. Any such changes from the measures in this Plan (or the applicant's approved plan) will be approved by the Director of the Office of Energy Projects (Director), upon the applicant's written request, if the Director agrees that an alternative measure:

1. provides equal or better environmental protection;
2. is necessary because a portion of this Plan is infeasible or unworkable based on project-specific conditions; or
3. is specifically required in writing by another federal, state, or Native American land management agency for the portion of the project on its land or under its jurisdiction.

Any requirements in this Plan to file material with the Secretary of the FERC (Secretary) do not apply to projects undertaken under the provisions of the blanket certificate program. This exemption does not apply to a request for alternative measures.

Project-related impacts on wetland and waterbody systems are addressed in the staff's Wetland and Waterbody Construction and Mitigation Procedures (Procedures).

Please refer to Bison's Reclamation Plan for additional information regarding construction and spacing of temporary and permanent erosion control measures on Bureau of Land Management (BLM) lands, compaction testing methods and decompaction procedures on BLM lands, revegetation procedures on BLM lands, and other specific requirements related to BLM lands. Please refer to Bison's Wetland Restoration Plan for additional details on the monitoring efforts to be applied to wetlands. Please refer to Bison's Agricultural Mitigation Plan for additional details on the monitoring efforts to be applied to agricultural lands.

II. Supervision and Inspection

A. Environmental Inspection

1. At least one Environmental Inspector (EI) is required for each construction spread during construction and restoration (as defined in section V). The number and experience of EIs assigned to each construction spread should be appropriate for the length of the construction spread and the number/significance of resources affected.
2. EIs shall have peer status with all other activity inspectors.
3. EIs shall have the authority to stop activities that violate the environmental conditions of the Certificate, state and federal environmental permit conditions, or landowner requirements; and to order appropriate corrective action.

B. Responsibilities of Environmental Inspectors

At a minimum, the EI(s) shall be responsible for:

1. Ensuring compliance with the requirements of this Plan, the Procedures, the environmental conditions of the Certificate authorization, the mitigation measures proposed by the applicant (as approved and/or modified by the Certificate), other environmental permits and approvals, and environmental requirements in landowner easement agreements.
2. Identifying, documenting, and overseeing corrective actions, as necessary to bring an activity back into compliance;
3. Verifying that the limits of authorized construction work areas and locations of access roads are properly marked before clearing;
4. Verifying the location of signs and highly visible flagging marking the boundaries of sensitive resource areas, waterbodies, **riparian areas**, wetlands, or areas with special requirements along the construction work area;
5. Identifying erosion/sediment control and soil stabilization needs in all areas;
6. Ensuring that the location of dewatering structures and slope breakers will not direct water into known cultural resources sites or locations of sensitive species;
7. Verifying that trench dewatering activities do not result in the deposition of sand, silt, and/or sediment near the point of discharge into a wetland or waterbody. If such deposition is occurring, the dewatering activity shall be stopped and the design of the discharge shall be changed to prevent reoccurrence;
8. Ensuring that **all impacted BLM lands in Wyoming be tested to measure compaction and determine the required depth for decompaction**;
9. Advising the Chief Construction Inspector when conditions (such as wet weather) make it advisable to restrict construction activities to avoid excessive rutting of topsoil;
10. Ensuring restoration of contours and topsoil;

11. Verifying that the soils imported for agricultural or residential use have been certified as free of noxious weeds and soil pests, unless otherwise approved by the landowner;
12. Determining the need for and ensuring that erosion controls are properly installed, as necessary to prevent sediment flow into wetlands, waterbodies, sensitive areas, and onto roads;
13. Inspecting and ensuring the maintenance of temporary erosion control measures at least:
    a. on a daily basis in areas of active construction or equipment operation;
    b. on a weekly basis in areas with no construction or equipment operation; and
    c. within 24 hours of each 0.5 inch of rainfall;
14. Ensuring the repair of all ineffective temporary erosion control measures within 24 hours of identification;
15. Keeping records of compliance with the environmental conditions of the FERC certificate, and the mitigation measures proposed by the project sponsor in the application submitted to the FERC, and other federal or state environmental permits during active construction and restoration; and
16. Identifying areas that should be given special attention to ensure stabilization and restoration after the construction phase.

III. Preconstruction Planning

The project sponsor shall do the following before construction:

A. Construction Work Areas

1. Identify all construction work areas (e.g., construction right-of-way, extra work space areas, pipe storage and contractor yards, borrow and disposal areas, access roads, fuel and maintenance areas, etc.) that would be needed for safe construction. The project sponsor must ensure that appropriate cultural resources and biological surveys have been conducted; and
2. Project sponsors are encouraged to consider expanding any required cultural resources and endangered species surveys in anticipation of the need for activities outside of certificated work areas.

B. Drain Tile and Irrigation Systems

1. Attempt to locate existing drain tiles and irrigation systems;
2. Contact landowners and local soil conservation authorities to determine the locations of future drain tiles that are likely to be installed within three years of the authorized construction;

3. Develop procedures for constructing through drain-tiled areas, maintaining irrigation systems during construction, and repairing drain tiles and irrigation systems after construction; and
4. Engage qualified drain tile specialists, as needed to conduct or monitor repairs to drain tile systems affected by construction. Use drain tile specialists from the project area, if available.

C. Grazing Deferment

Develop grazing deferment plans with willing landowners, grazing permittees, and land management agencies to minimize grazing disturbance of revegetation efforts.

D. Road Crossing and Access Points

Plan for safe and accessible conditions at all roadway crossings and access points during construction and restoration.

E. Disposal Planning

Determine methods and locations for the disposal of construction debris (e.g., timber, slash, mats, garbage, drilling fluids, excess rock, etc). Off-site disposal in other than commercially operated disposal locations is subject to compliance with all applicable survey, landowner permission, and mitigation requirements.

F. Agency Coordination

The project sponsor must coordinate with the appropriate local, state, and federal agencies as outlined in this Plan and in the Certificate.

1. Obtain written recommendations from the local soil conservation authorities or land management agencies regarding permanent erosion control and revegetation specifications.
2. Develop specific procedures in coordination with the appropriate agency to prevent the introduction or spread of noxious weeds and soil pests resulting from construction and restoration activities.

G. Stormwater Pollution Prevention Plan

Make available on each construction spread the Stormwater Pollution Prevention Plan prepared for compliance with the U.S. Environmental Protection Agency's National Stormwater Program General Permit requirements.

IV. Installation

A. Approved Areas of Disturbance

1. Project-related ground disturbance shall be limited to the construction right-of-way, extra work space areas, pipe storage yards, borrow and disposal areas, access roads, and other areas approved in the Certificate. Any project-related ground disturbing activities outside these Certificated areas, except those needed to comply with the Plan and Procedures (e.g., slope breakers, energy-dissipating devices, dewatering structures, drain tile system repairs) will require prior Director approval. All construction or restoration activities outside of the Certificated areas are subject to all applicable survey and mitigation requirements.

2. The construction right-of-way width for a project shall not exceed **120** feet or that described in the FERC application unless otherwise modified by a Certificate condition. However, in limited, non-wetland areas, this construction right-of-way width may be expanded by up to 25 feet without Director approval to accommodate full construction right-of-way topsoil segregation and to ensure safe construction where topographic conditions (such as side-slopes) or soil limitations require it. Twenty-five feet of extra construction right-of-way width may also be used in limited, non-wetland or non-forested areas for truck turn-arounds where no reasonable alternative access exists.

   Project use of these additional limited areas is subject to landowner approval and compliance with all applicable survey and mitigation requirements. When such additional areas are used, each one should be identified and the need explained in the weekly construction reports to the FERC, if required. The following material should be included in the reports:

   a. the location of each additional area by station number and reference to a previously filed alignment sheet, or updated alignment sheets showing the additional areas;

   b. identification of where the Commission's records contain evidence that the additional areas were previously surveyed; and

   c. a statement that landowner approval has been obtained and is available in project files.

   Prior written approval of the Director is required when the Certificated construction right-of-way width would be expanded by more than 25 feet.

B. Topsoil Segregation

1. Unless the landowner or land management agency specifically approves otherwise, prevent the mixing of topsoil with subsoil by stripping topsoil from the **working side, the trench and a portion of the spoil storage areas (approximately 85 feet of the Construction ROW); except for the areas that will be used for topsoil or snow storage, or for a proposed brush beating demonstration area in Carter County, Montana, between approximate MPs 136.16 and 137.33, where the**

topsoil will only be stripped over the ditch and the area of the ditch spoil pile, in:

a. actively cultivated or rotated croplands and pastures;

b. residential areas;

c. hayfields; and

d. other areas at the landowner's or land managing agency's request.

2. In residential areas importation of topsoil is an acceptable alternative to topsoil segregation.
3. In deep soils (more than 12 inches of topsoil), segregate at least 12 inches of topsoil. In soils with less than 12 inches of topsoil make every effort to segregate the entire topsoil layer. **On lands managed by the North Dakota State Land Department, the upper 12 inches of soil will be segregated and managed as topsoil, regardless of the actual topsoil thickness/color change.**
4. Where topsoil segregation is required, maintain separation of salvaged topsoil and subsoil throughout all construction activities.
5. Segregated topsoil may not be used for padding the pipe.

C. Drain Tiles

1. Mark locations of drain tiles damaged during construction.
2. Probe all drainage tile systems within the area of disturbance to check for damage.
3. Repair damaged drain tiles to their original or better condition. Do not use filter-covered drain tiles unless the local soil conservation authorities and the landowner agree. Use qualified specialists for testing and repairs.
4. For new pipelines in areas where drain tiles exist or are planned, ensure that the depth of cover over the pipeline is sufficient to avoid interference with drain tile systems. For adjacent pipeline loops in agricultural areas, install the new pipeline with at least the same depth of cover as the existing pipeline(s).

D. Irrigation

Maintain water flow in crop irrigation systems, unless shutoff is coordinated with affected parties.

E. Road Crossings and Access Points

1. Maintain safe and accessible conditions at all road crossings and access points during construction.
2. If crushed stone access pads are used in residential or active agricultural areas, place the stone on synthetic fabric to facilitate removal.

F. Temporary Erosion Control

Temporary erosion and sediment control measures shall be installed immediately after initial disturbance of the soil, properly maintained throughout construction (on a daily basis), and reinstalled as necessary until replaced by permanent erosion control structures or restoration of the construction right-of-way is complete.

1. Temporary Slope Breakers
   a. Temporary slope breakers are intended to reduce runoff velocity and divert water off the construction right-of-way. Temporary slope breakers may be constructed of materials such as soil, silt fence, staked hay or straw bales, or sand bags.
   b. Install temporary slope breakers on all disturbed areas, as necessary to avoid excessive erosion. Temporary slope breakers must be installed on slopes greater than 5 percent where the base of the slope is less than 50 feet from waterbody**,** wetland, and road crossings at the following spacing (closer spacing should be used if necessary);

Slope (%)	Spacing (feet)
5-15	300
>15-30	200
>30	100

   c. Direct the outfall of each temporary slope breaker to a stable, well vegetated area or construct an energy-dissipating device at the end of the slope breaker and off the construction right-of-way.
   d. Position the outfall of each temporary slope breaker to prevent sediment discharge into wetlands, waterbodies, or other sensitive resources.
2. Sediment Barriers
   a. Sediment barriers are intended to stop the flow of sediments and to prevent the deposition of sediments into sensitive resources. They may be constructed of materials such as silt fence, staked hay or straw bales, compacted earth (e.g., driveable berms across travelways), sand bags, or other appropriate materials.
   b. At a minimum, install and maintain temporary sediment barriers across the entire construction right-of-way at the base of slopes greater than 5 percent where the base of the slope is less than 50 feet from a waterbody or wetland or road crossing until revegetation is successful as defined in this Plan. Leave adequate room between the base of the slope and the sediment barrier to accommodate ponding of water and sediment deposition.
   c. Where wetlands or waterbodies are adjacent to and downslope of construction work areas, install sediment barriers along the edge of these areas, as necessary to prevent sediment flow into the wetland or waterbody.

3. Mulch

   a. Apply mulch on all slopes (except in actively cultivated cropland) concurrent with or immediately after seeding, where necessary to stabilize the soil surface and to reduce wind and water erosion. Spread mulch uniformly over the area to cover at least 75 percent of the ground surface at a rate of 2 tons/acre of straw or its equivalent, unless the local soil conservation authority, landowner, or land managing agency approves otherwise in writing.

   b. Mulch can consist of weed-free straw or hay, wood fiber hydromulch, erosion control fabric, or some functional equivalent. **No wood fiber hydromulch should be applied on BLM lands in Montana. All materials used to bind hay or straw will either be biodegradable or will be collected for proper, off-site disposal.**

   c. Mulch <u>before</u> seeding if:

      (1) final grading and installation of permanent erosion control measures will not be completed in an area within 20 days after the trench in that area is backfilled (10 days in residential areas), as required in section V.A.1; or

      (2) construction or restoration activity is interrupted for extended periods, such as when seeding cannot be completed due to seeding period restrictions.

   d. If mulching <u>before</u> seeding, increase mulch application on all slopes within 100 feet of waterbodies and wetlands to a rate of 3 tons/acre of straw or equivalent.

   e. If wood chips are used as mulch, do not use more than 1 ton/acre. **BLM does not recommend fertilizer due to enhanced competition from weeds.**

   f. Ensure that mulch is adequately anchored to minimize loss due to wind and water.

   g. When anchoring with liquid mulch binders, use rates recommended by the manufacturer. Do not use liquid mulch binders within 100 feet of wetlands or waterbodies.

   h. Install erosion control fabric on waterbody banks at the time of final bank recontouring. Anchor the erosion control fabric with staples or other appropriate devices.

V. Restoration

A. Cleanup

1. Commence cleanup operations immediately following backfill operations. Complete final grading, topsoil replacement, and installation of permanent erosion control structures within 20 days after backfilling the trench (10 days in residential areas). If seasonal or other weather conditions prevent compliance with these time frames, maintain temporary erosion controls (temporary slope breakers and sediment barriers) until conditions allow completion of cleanup. **Should Bison require site-specific exceptions to this timeframe that would result in a delay of**

restoration; Bison will submit such exceptions for FERC's review and written approval.

The project sponsor should file with the Secretary for the review and written approval of the Director, a winterization plan if construction will continue into the winter season when conditions could delay successful decompaction, topsoil replacement, or seeding until the following spring.

2. A travel lane may be left open temporarily to allow access by construction traffic if the temporary erosion control structures are installed as specified in section IV.F, and inspected and maintained as specified in sections II.B.12 through 14. When access is no longer required the travel lane must be removed and the right-of-way restored.
3. Rock excavated from the trench may be used to backfill the trench only to the top of the existing bedrock profile. Rock that is not returned to the trench should be considered construction debris, unless approved for use as mulch or for some other use on the construction work areas by the landowner or land managing agency.
4. Remove excess rock **greater than 3 inches in diameter** from at least the top 12 inches of soil in all actively cultivated or rotated cropland and pastures, hayfields, and residential areas, as well as other areas at landowner's request. The size, density, and distribution of rock remaining on the construction work area should be similar to adjacent areas not disturbed by construction. The landowner may approve other provisions in writing.
5. Grade the construction right-of-way to restore pre-construction contours and leave the soil in the proper condition for planting.
6. Remove construction debris from all construction work areas unless the landowner or land managing agency approves otherwise.
7. Remove temporary sediment barriers when replaced by permanent erosion control measures or when revegetation is successful.

B. Permanent Erosion Control Devices

1. Trench Breakers
   a. Trench breakers are intended to slow the flow of subsurface water along the trench. Trench breakers may be constructed of materials such as sand bags or polyurethane foam. Do not use topsoil in trench breakers.
   b. An engineer or similarly qualified professional shall determine the need for and spacing of trench breakers. Otherwise, trench breakers shall be installed at the same spacing as and upslope of permanent slope breakers.
   c In agricultural fields and residential areas where slope breakers are not typically required, install trench breakers at the same spacing as if permanent slope breakers where required.
   d. At a minimum, install a trench breaker at the base of slopes greater than 5 percent where the base of the slope is less than 50 feet from a waterbody or wetland and where needed to avoid draining a waterbody or wetland.

2. Permanent Slope Breakers

   a. Permanent slope breakers are intended to reduce runoff velocity, divert water off the construction right-of-way, and prevent sediment deposition into sensitive resources. Permanent slope breakers may be constructed of materials such as soil, sand bags, or some functional equivalent.

   b. Construct and maintain permanent slope breakers in all areas, except cultivated areas and lawns, using spacing recommendations obtained from the local soil conservation authority or land managing agency. In the absence of written recommendations, use the following spacing unless closer spacing is necessary to avoid excessive erosion on the construction right-of-way:

Slope (%)	Spacing (feet)
5-15	**300**
>15-30	**200**
>30	**100**

   c. Construct slope breakers to divert surface flow to a stable area without causing water to pool or erode behind the breaker. In the absence of a stable area, construct appropriate energy-dissipating devices at the end of the breaker.

   d. Slope breakers may extend slightly (about 4 feet) beyond the edge of the construction right-of-way to effectively drain water off the disturbed area. Where slope breakers extend beyond the edge of the construction right-of way, they are subject to compliance with all applicable survey requirements.

C. Soil Compaction Mitigation

1. **Bison will decompact subsoils on the working side of the trench along the entire Project route, except in locations where the subsoils were not disturbed by grading (i.e. the spoil storage areas and the brush beating demonstration area) and in areas of deep cut and fill. Bison's EIs will identify areas where decompaction is not necessary. Under normal conditions, compaction of subsoils due to construction traffic is expected to be in the order of 8 to 10 inches. As such, decompaction will be completed to a depth up to 18 inches where practical to account for extraordinary conditions.**

   Decompaction of subsoil is proposed to be completed before replacement of topsoil. If decompaction of the subsoil is not performed prior to replacement of topsoil, decompaction shall be accomplished though use of a subsoiling tool that will not mix subsoil and topsoil.

2. **On BLM lands in Wyoming affected by the Project, Bison will perform compaction testing to determine the depth of compaction. Testing will occur after all construction activities have been completed, and will comprise a comparison of the soil density on the ROW to the in situ soil density at an undisturbed location off the ROW, as measured empirically in the field.**

Actual testing methods and intervals will be discussed with and approved by the BLM prior to use, and will be provided at a later date. On BLM lands in Wyoming, Bison will complete soil decompaction to a depth of at least 4 inches below the measured depth of compaction.

3. **Decompact the working side of the entire Construction Right of Way with a deep tillage implement prior to replacement of segregated topsoil.**

   Alternatively, make arrangements with the landowner to plant and plow under a "green manure" crop, such as alfalfa, to decrease soil bulk density and improve soil structure. If subsequent construction and cleanup activities result in further compaction, conduct additional tilling.

4. Perform appropriate soil compaction mitigation in severely compacted residential areas.

D. Revegetation

1. General

   a. The project sponsor is responsible for ensuring successful revegetation of soils disturbed by project-related activities, except as noted in section V.D.1.b.

   b. Restore all turf, ornamental shrubs, and specialized landscaping in accordance with the landowner's request, or compensate the landowner. Restoration work must be performed by personnel familiar with local horticultural and turf establishment practices.

2. Soil Additives

   Fertilize and add soil pH modifiers in accordance with written recommendations obtained from the local soil conservation authority, land management agencies, or landowner. Incorporate recommended soil pH modifier and fertilizer into the top 2 inches of soil as soon as possible after application.

3. Seeding Requirements

   a. **Drill seeding methods will be utilized on disturbed soil areas with slopes of 15 percent or less that are readily accessible by necessary equipment. Broadcast seeding will be used on slopes greater than 15 percent, at double the recommended seeding rates. Soil will be rolled and pitted or chained following broadcast seeding to promote proper seed-to-soil contact and to discourage predation of seed. Other seeding methods may be used upon concurrence with the BLM or other appropriate agency under appropriate conditions. If hydroseeding is used, the seedbed will be scarified to facilitate lodging and germination of seed. Please refer to Bison's Reclamation Plan**.

   b. Seed disturbed areas in accordance with written recommendations for seed mixes, rates, and dates obtained from the local soil conservation authority or as requested by the landowner or land management agency. Seeding is not required in actively cultivated croplands unless requested by the landowner.

   c. Perform seeding of permanent vegetation within the recommended seeding dates. If seeding cannot be done within those dates, use appropriate temporary

erosion control measures discussed in section IV.F. and perform seeding of permanent vegetation at the beginning of the next recommended seeding season. Lawns may be seeded on a schedule established with the landowner.

d. In the absence of written recommendations from the local soil conservation authorities, seed all disturbed soils within 6 working days of final grading, weather and soil conditions permitting, subject to the specifications in section V.D.3.a-c. **Should Bison require site-specific exceptions to this timeframe that would result in a delay of restoration; Bison will submit such exceptions for FERC's review and written approval**.

e. Base seeding rates on Pure Live Seed. Use seed within 12 months of seed testing.

f. Treat legume seed with an inoculant specific to the species using the manufacturer's recommended rate of inoculant appropriate for the seeding method (broadcast, drill, or hydro).

VI. Site Specific Plans

In recent discussions with BLM reclamation specialists (AECOM 2009), no specific sites have been identified on the project for site-specific soil reclamation plans. However, BLM staff have provided general guidance for areas designated Low Reclamation Potential (LRP), which was primarily based on soil survey data obtained from Soil Survey Geographic (SSURGO) database information. Bison's Reclamation Plan contains locations of LRP areas by milepost and provides methods for reclamation in these areas based on soil characteristics.

For any area of sensitive resources subsequently identified on BLM land, especially those where reclamation by previous pipeline projects has not been deemed successful, the project sponsor shall prepare a site-specific construction plan. The plan shall include:

A. A description of construction techniques to be used; and

B. A dimensioned site plan that shows, as a minimum:

1. **the location of the area of concern in relation to the Project;**
2. **the edge of the new permanent construction right-of-way; and**
3. **other nearby topographical features including landscaping, trees, structures, roads, parking areas, or ditches/streams, etc.**

VII. Off-Road Vehicle Control

To each owner or manager of forested lands, offer to install and maintain measures to control unauthorized vehicle access to the right-of-way. These measures may include:

A. Signs;

B. Fences with locking gates;

C. Slash and timber barriers, pipe barriers, or a line of boulders across the right-of-way; and,

D. Conifers or other appropriate trees or shrubs across the right-of-way.

VIII. Post-Construction Activities

A. Monitoring and Maintenance

1. Conduct follow-up inspections of all disturbed areas after the first and second growing seasons to determine the success of revegetation.
2. Revegetation in non-agricultural areas shall be considered successful if upon visual survey the density and cover of non-nuisance vegetation are similar in density and cover to adjacent undisturbed lands. In agricultural areas, revegetation shall be considered successful if crop yields are similar to adjacent undisturbed portions of the same field. **On BLM-managed lands, the requirements of the Reclamation Plan will be used to help define reclamation (revegetation) success**. Continue revegetation efforts until revegetation is successful.
3. Monitor and correct problems with drainage and irrigation systems resulting from pipeline construction in active agricultural areas until restoration is successful.
4. Restoration shall be considered successful if the right-of-way surface condition is similar to adjacent undisturbed lands, construction debris is removed (unless requested otherwise by the land owner or land managing agency), revegetation is successful, and proper drainage has been restored.
5. Routine vegetation **maintenance (regular, periodic mowing) will not be performed on the Bison Pipeline ROW. If and when ROW mowing is required in specific areas, FERC will be notified before such mowing takes place**. In no case shall routine vegetation maintenance clearing occur between April 15 and August 1 of any year.
6. Efforts to control unauthorized off-road vehicle use, in cooperation with the landowner, shall continue throughout the life of the project. Maintain signs, gates, and vehicle trails as necessary.

B. Reporting

1. The project sponsor shall maintain records that identify by milepost:
   a. method of application, application rate, and type of fertilizer, pH modifying agent, seed, and mulch used;
   b. acreage treated;
   c. dates of backfilling and seeding;
   d. names of landowners requesting special seeding treatment and a description of the follow-up actions; and
   e. any problem areas and how they were addressed.

2. The project sponsor shall file with the Secretary quarterly activity reports documenting problems, including those identified by the landowner, and corrective actions taken for at least 2 years following construction.

References

AECOM, 2009, Meeting Minutes, Discussion of BLM Soils Reclamation, BLM, Casper Field Office, January 27, 2009.

Prepared for:
Bison Pipeline LLC

Wetland and Waterbody Construction and Mitigation Procedures

AECOM, Inc.
April 2010
Document No.: 60138067

AECOM

Wetland and Waterbody Construction and Mitigation Procedures

CONTENTS

I. Applicability 3
II. Preconstruction Filing 4
III. Environmental Inspectors 4
IV. Preconstruction Planning 4
V. Waterbody Crossings 6
VI. Wetland Crossing 13
VII. Hydrostatic Testing 17

TABLES

Table 1 – Revisions to FERC Document: Wetland and Waterbody Construction and Mitigation Procedures 1

Wetland and Waterbody Construction and Mitigation Procedures

This document is based on the Federal Energy Regulatory Commission's (FERC's) January 17, 2003 version of the Wetland and Waterbody Construction and Mitigation Procedures, which has been adopted for use in its entirety by Bison with modifications identified in Table 1. Modifications to this Document since October 2009 are listed in this table in underlined text. These modifications reflect changes that were not present in this Document during FERC's Final Environmental Impact Statement (EIS) analysis.

Table 1 – Revisions to FERC Document: Wetland and Waterbody Construction and Mitigation Procedures

Section	Description of Modifications
IV.A.1.g.	Inserted after (f.) a sub-section (g), specifying that chemical storage and refueling operations will occur no less than 500 feet from waterbodies and wetlands when on Bureau of Land Management (BLM)-managed lands.
V.B.3.g	Inserted information about Bison's use of the double-ditching technique in waterbodies, and clarified that this method would not be used in pond S4IHE034 (MP 263.1) and pond S4IHE035 (MP 264.3), unless these features are dry at the time of construction.
V.B.3.h	Inserted language stating locations at which Bison will reduce the Construction ROW within waterbodies.
V.B.6.d.(4)	Inserted as (4). Discussion of methods for disposal of drilling mud and cuttings.
V.B.9	Added within (9), language indicating that the contractor will construct waterbody crossings as shown in construction drawings.
V.B.10	Added new subsection to describe Bison's crossing methods for waterbodies with no perceptible flow at the time of crossing, and clarified that this method would not be used in pond S4IHE034 (MP 263.1) and pond S4IHE035 (MP 264.3), unless these features are dry at the time of construction.
V.C.1	Revised language to reflect Bison's use of the double-ditching technique in waterbodies.
V.C.6	BLM Request. Revised restoration language to be consistent with Bison's Wetland Restoration Plan.
V.D.1	Revised language regarding routine maintenance
VI.A.4	Added definition of wetland buffers and their demarcation requirements.
VI.C. 5	Revised language to specify that wetlands on BLM lands in Wyoming will be sown with a seed mix provided by BLM Wyoming.
VI.C. 6	Specify that all disturbed areas are successfully revegetated in accordance with Bison's Wetland Restoration Plan.
VI.D.1	Revised language regarding routine maintenance
VII.B.2	Inserted language specifying that pump use is restricted within 500 feet of waterbodies and wetlands when on BLM-managed lands.

The modifications identified above are highlighted with **bolded text** in the body of this report. This document, with the FERC-approved modifications listed, will be known as Bison's Procedures.

I. Applicability

A. The intent of these Procedures is to assist applicants by identifying baseline mitigation measures for minimizing the extent and duration of Project-related disturbance on wetlands and waterbodies. The Project sponsors should specify in their applications for a FERC Certificate (Certificate) any individual measures in these Procedures they consider unnecessary, technically infeasible, or unsuitable due to local conditions and to fully describe any alternative measures they would use. Applicants should also explain how those alternative measures would achieve a comparable level of mitigation.

Once a project is certificated, further changes can be approved. Any such changes from the measures in these Procedures (or the applicant's approved procedures) will be approved by the Director of the Office of Energy Projects (Director), upon the applicant's written request, if the Director agrees that an alternative measure:

1. Provides equal or better environmental protection;
2. Is necessary because a portion of these Procedures is infeasible or unworkable based on project-specific conditions; or
3. Is specifically required in writing by another federal, state, or Native American land management agency for the portion of the project on its land or under its jurisdiction.

Any requirements in these Procedures to file material with the Secretary of the FERC (Secretary) do not apply to projects undertaken under the provisions of the blanket certificate program. This exemption does not apply to a request for alternative measures.

Project-related impacts on non-wetland areas are addressed in the staff's Upland Erosion Control, Revegetation, and Maintenance Plan (Plan).

B. Definitions

1. "Waterbody" includes any natural or artificial stream, river, or drainage with perceptible flow at the time of crossing, and other permanent waterbodies such as ponds and lakes.

   a. "Minor waterbody" includes all waterbodies less than or equal to 10 feet wide at the water's edge at the time of crossing.

   b. "Intermediate waterbody" includes all waterbodies greater than 10 feet wide but less than or equal to 100 feet wide at the water's edge at the time of crossing.

   c. "Major waterbody" includes all waterbodies greater than 100 feet wide at the water's edge at the time of crossing.

2. "Wetland" includes any area that is not in actively cultivated or rotated cropland and that satisfies the requirements of the current federal methodology for identifying and delineating wetlands.

II. Preconstruction Filing

A. The following information shall be filed with the Secretary prior to the beginning of construction:

1. The hydrostatic testing information specified in Section VII.B.3. and a wetland delineation report as described in Section VI.A.1., if applicable; and
2. A schedule identifying when trenching or blasting would occur within each waterbody greater than 10 feet wide, or within any designated coldwater fishery. The Project Sponsor shall revise the schedule as necessary to provide FERC staff at least 14 days advance notice. Changes within this last 14-day period must provide for at least 48 hours advance notice.

B. The following site-specific construction plans required by these Procedures must be filed with the Secretary for the review and written approval by the Director:

1. Plans for extra work areas that would be closer than 50 feet from a waterbody or wetland;
2. Plans for major waterbody crossings;
3. Plans for the use of a Construction Right-of-Way (ROW) greater than 75 feet wide in wetlands; and
4. Plans for horizontal directional drill (HDD) "crossings" of wetlands or waterbodies.

III. Environmental Inspectors

A. At least one Environmental Inspector (EI) having knowledge of the wetland and waterbody conditions in the Project area is required for each construction spread. The number and experience of EIs assigned to each construction spread should be appropriate for the length of the construction spread and the number/significance of resources affected.

B. The EI's responsibilities are outlined in Bison’s Upland Erosion Control, Revegetation and Maintenance Plan (Bison’s Plan).

IV. Preconstruction Planning

A. A copy of the Stormwater Pollution Prevention Plan (SWPPP) prepared for compliance with the United States Environmental Protection Agency's (USEPA’s) National Stormwater Program General Permit requirements must be available in the field on each construction spread. The SWPPP shall contain spill prevention and response procedures that meet the requirements of state and federal agencies.

1. It shall be the responsibility of the Project Sponsor and its contractors to structure their operations in a manner that reduces the risk of spills or the accidental exposure of fuels or hazardous materials to waterbodies or wetlands. The Project Sponsor and its contractors must, at a minimum, ensure that:

    a. all employees handling fuels and other hazardous materials are properly trained;

    b. all equipment is in good operating order and inspected on a regular basis;

    c. fuel trucks transporting fuel to on-site equipment travel only on approved access roads;

    d. all equipment is parked overnight and/or fueled at least 100 feet from a waterbody or in an upland area at least 100 feet from a wetland boundary. These activities can occur closer only if the EI finds, in advance, no reasonable alternative and the Project Sponsor and its contractors have taken appropriate steps (including secondary containment structures) to prevent spills and provide for prompt cleanup in the event of a spill;

    e. hazardous materials, including chemicals, fuels, and lubricating oils, are not stored within 100 feet of a wetland, waterbody, or designated municipal watershed area, unless the location is designated for such use by an appropriate governmental authority. This applies to storage of these materials and does not apply to normal operation or use of equipment in these areas; and

    f. concrete coating activities are not performed within 100 feet of a wetland or waterbody boundary, unless the location is an existing industrial site designated for such use; and

    g. all chemical storage, equipment overnight parking and/or fueling, and concrete coating activities will occur at least 500 feet from a waterbody or wetland when on Bureau of Land Management (BLM)-managed lands.

2. The Project Sponsor and its contractors must structure their operations in a manner that provides for the prompt and effective cleanup of spills of fuel and other hazardous materials. At a minimum, the Project Sponsor and its contractors must:

    a. ensure that each construction crew (including cleanup crews) has on hand sufficient supplies of absorbent and barrier materials to allow the rapid containment and recovery of spilled materials and knows the procedure for reporting spills;

    b. ensure that each construction crew has sufficient tools and materials on-hand to stop leaks;

    c. know the contact names and telephone numbers for all local, state, and federal agencies (including, if necessary, the U.S. Coast Guard and the National Response Center) that must be notified of a spill; and

    d. follow the requirements of those agencies in cleaning up the spill, in excavating and disposing of soils or other materials contaminated by a spill, and in collecting and disposing of waste generated during spill cleanup.

B. Agency Coordination

The Project Sponsor must coordinate with the appropriate local, state, and federal agencies as outlined in these Procedures and in the Certificate.

V. Waterbody Crossings

A. Notification Procedures and Permits

1. Apply to the United States Army Corps of Engineers (USACE), or its delegated agency, for the appropriate wetland and waterbody crossing permits.
2. Provide written notification to authorities responsible for potable surface water supply intakes located within 3 miles downstream of the crossing at least one week before beginning work in the waterbody, or as otherwise specified by that authority.
3. Apply for state-issued waterbody crossing permits and obtain individual or generic Section 401 water quality certification or waiver.
4. Notify appropriate state authorities at least 48 hours before beginning trenching or blasting within the waterbody, or as specified in state permits.

B. Installation

1. Time Window for Construction

   Unless expressly permitted or further restricted by the appropriate state agency in writing on a site-specific basis, in-stream work, except that required to install or remove equipment bridges, must occur during the following time windows:

   a. coldwater fisheries - June 1 through September 30; and
   b. coolwater and warmwater fisheries - June 1 through November 30.

2. Extra Work Areas

   a. Locate all extra work areas (EWS) (such as staging areas and additional spoil storage areas) at least 50 feet away from water’s edge, except where the adjacent upland consists of actively cultivated or rotated cropland or other disturbed land.
   b. The Project Sponsor shall file with the Secretary, for review and written approval by the Director, a site-specific construction plan for each extra work area with a less than 50-foot setback from the water's edge (except where the adjacent upland consists of actively cultivated or rotated cropland or other disturbed land) and a site-specific explanation of the conditions that will not permit a 50-foot setback.
   c. Limit clearing of vegetation between extra work areas and the edge of the waterbody to the certificated Construction ROW.

d. Limit the size of extra work areas to the minimum needed to construct the waterbody crossing.

3. General Crossing Procedures

a. Comply with the USACE, or its delegated agency, permit terms and conditions.

b. Construct crossings as close to perpendicular to the axis of the waterbody channel as engineering and routing conditions permit.

c. If the pipeline parallels a waterbody, attempt to maintain at least 15 feet of undisturbed vegetation between the waterbody (and any adjacent wetland) and the Construction ROW.

d. Where waterbodies meander or have multiple channels, route the pipeline to minimize the number of waterbody crossings.

e. Maintain adequate flow rates to protect aquatic life and prevent the interruption of existing downstream uses.

f. Waterbody buffers (extra work area setbacks, refueling restrictions, etc.) must be clearly marked in the field with signs and/or highly visible flagging until construction-related ground disturbing activities are complete.

g. Utilize the double-ditching technique to separate the top one foot of stream bottom substrate from deeper soil layers over the trench line for all waterbodies crossed by the Project, <u>except for 2 ponds (S4IHE034 located at MP 263.1 and S4IHE035 at MP 264.3), if wet at the time of crossing. If these ponds are dry at the time of crossing, the double ditching technique shall be employed.</u> Reconstruct the original layers by replacing deeper substrate first.

h. Reduce the Construction ROW for waterbodies with no perceptible flow at the time of construction when there is an adjacent wetland as required for wetlands in Section VI.A.3.

4. Spoil Pile Placement and Control

a. All spoil from minor and intermediate waterbody crossings, and upland spoil from major waterbody crossings, must be placed in the Construction ROW at least 10 feet from the waterbody water's edge or in additional extra work areas as described in Section V.B.2.

b. Use sediment barriers to prevent the flow of spoil or heavily silt-laden water into any waterbody.

5. Equipment Bridges

a. Only clearing equipment and equipment necessary for installation of equipment bridges may cross waterbodies prior to bridge installation. Limit the number of such crossings of each waterbody to one per piece of clearing equipment.

b. Construct equipment bridges to maintain unrestricted flow and to prevent soil from entering the waterbody. Examples of such bridges include:

(1) Equipment pads and culvert(s);

(2) Equipment pads or railroad car bridges without culvert(s);

(3) Clean rock fill and culvert(s); and

(4) Flexi-float or portable bridges.

Additional options for equipment bridges may be utilized that achieve the performance objectives noted above. Do not use soil to construct or stabilize equipment bridges.

c. Design and maintain each equipment bridge to withstand and pass the highest flow expected to occur while the bridge is in place. Align culverts to prevent bank erosion or streambed scour. If necessary, install energy dissipating devices downstream of the culverts.

d. Design and maintain equipment bridges to prevent soil from entering the waterbody.

e. Remove equipment bridges as soon as possible after permanent seeding unless the USACE, or its delegated agency, authorizes it as a permanent bridge.

f. If there will be more than one month between final cleanup and the beginning of permanent seeding and reasonable alternative access to the Construction ROW is available, remove equipment bridges as soon as possible after final cleanup.

6. Dry-Ditch Crossing Methods

a. Unless approved otherwise by the appropriate state agency, install the pipeline using one of the dry-ditch methods outlined below for crossings of waterbodies up to 30 feet wide (at the water's edge at the time of construction) that are state-designated as either coldwater or significant coolwater or warmwater fisheries.

b. Dam and Pump

(1) The dam-and-pump method may be used without prior approval for crossings of waterbodies where pumps can adequately transfer streamflow volumes around the work area and there are no concerns about sensitive species passage.

(2) Implementation of the dam-and-pump crossing method must meet the following performance criteria:

(i) Use sufficient pumps, including on-site backup pumps, to maintain downstream flows;

(ii) Construct dams with materials that prevent sediment and other pollutants from entering the waterbody (e.g., sandbags or clean gravel with plastic liner);

(iii) Screen pump intakes;

(iv) Prevent streambed scour at pump discharge; and

(v) Monitor the dam and pumps to ensure proper operation throughout the waterbody crossing.

c. Flume Crossing

The flume crossing method requires implementation of the following steps:

(1) Install flume pipe after blasting (if necessary), but before any trenching;

(2) Use sand bag or sand bag and plastic sheeting diversion structure or equivalent to develop an effective seal and to divert stream flow through the flume pipe (some modifications to the stream bottom may be required in order to achieve an effective seal);

(3) Properly align flume pipe(s) to prevent bank erosion and streambed scour;

(4) Do not remove flume pipe during trenching, pipelaying, or backfilling activities, or initial streambed restoration efforts; and

(5) Remove all flume pipes and dams that are also not part of the equipment bridge as soon as final cleanup of the stream bed and bank is complete.

d. Horizontal Directional Drill (HDD)

To the extent they were not provided as part of the pre-certification process, for each waterbody or wetland that would be crossed using the HDD method, provide a plan that includes:

(1) Site-specific construction diagrams that show the location of mud pits, pipe assembly areas, and all areas to be disturbed or cleared for construction;

(2) A description of how an inadvertent release of drilling mud would be contained and cleaned up;

(3) A contingency plan for crossing the waterbody or wetland in the event the directional drill is unsuccessful and how the abandoned drill hole would be sealed, if necessary; and

(4) **A plan for how the Contractor shall dispose of all drill cuttings and drilling mud. With the permission of the landowner, drill fluid and cuttings will be spread over the subsoil layer in the Construction ROW, covered with topsoil and reseeded. Samples of the spent fluid will be acquired and analyzed for contamination prior to disposal. Otherwise, waste will be collected, transported and disposed of off-site at an approved location.**

7. Crossings of Minor Waterbodies

Where a dry-ditch crossing is not required, minor waterbodies may be crossed using the open-cut crossing method, with the following restrictions:

a. Except for blasting and other rock breaking measures, complete instream construction activities (including trenching, pipe installation, backfill, and restoration of the streambed contours) within 24 hours. Streambanks and unconsolidated streambeds may require additional restoration after this period;

b. Limit use of equipment operating in the waterbody to that needed to construct the crossing; and

c. Equipment bridges are not required at minor waterbodies that do not have a state-designated fishery classification (e.g., agricultural or intermittent drainage ditches). If an equipment bridge is used, however, it must be constructed as described in Section V.B.5.

8. Crossings of Intermediate Waterbodies

Where a dry-ditch crossing is not required, intermediate waterbodies may be crossed using the open-cut crossing method, with the following restrictions:

a. Complete instream construction activities (not including blasting and other rock breaking measures) within 48 hours, unless site-specific conditions make completion within 48 hours infeasible;

b. Limit use of equipment operating in the waterbody to that needed to construct the crossing; and

c. All other construction equipment must cross on an equipment bridge as specified in Section V.B.5.

9. Crossings of Major Waterbodies

Before construction, the Project Sponsor shall file with the Secretary, for the review and written approval by the Director, a detailed, site-specific construction plan and scaled drawings identifying all areas to be disturbed by construction for each major waterbody crossing (the scaled drawings are not required for any offshore portions of pipeline projects). This plan should be developed in consultation with the appropriate state and federal agencies and should include extra work areas, spoil storage areas, sediment control structures, etc., as well as mitigation for navigational issues.

The EI may adjust the final placement of the erosion and sediment control structures in the field to maximize effectiveness.

The Contractor shall construct each major waterbody crossing in accordance with a site-specific plan as shown in the construction drawings. The Contractor shall complete in-stream construction activities as expediently as practicable.

10. Waterbodies with No Perceptible Flow (Dry Crossings)

For waterbodies that are dry at the time of construction [e.g. those with no perceptible flow, including inundated waterbodies with no perceptible flow,

<u>except for 2 ponds (S4IHE034 located at MP 263.1 and S4IHE035 at MP 264.3), if wet at the time of crossing],</u> Bison will utilize conventional (upland) trenching construction methods with adherence to the following proposed crossing measures:

a. Reducing the right-of-way at locations where adjacent and/or associated wetlands are present;
b. Maintaining vegetated buffer zones until immediately before trenching is about to commence;
c. Crossing these resources in accordance with its Procedures (typically within 24 to 48 hours);
d. Initiating bank restoration within 48 hours from the start of the crossing; and
e. Keeping bridge materials readily available to install should a rain event occur and perceptible flow become present.

11. Temporary Erosion and Sediment Control

Install sediment barriers (as defined in Section IV.F.2.a. of the Plan) immediately after initial disturbance of the waterbody or adjacent upland. Sediment barriers must be properly maintained throughout construction and reinstalled as necessary (such as after backfilling of the trench) until replaced by permanent erosion controls or restoration of adjacent upland areas is complete. Temporary erosion and sediment control measures are addressed in more detail in the Plan; however, the following specific measures must be implemented at stream crossings:

a. Install sediment barriers across the entire Construction ROW at all waterbody crossings, where necessary, to prevent the flow of sediment into the waterbody. In the travel lane, these may consist of removable sediment barriers or drivable berms. These removable sediment barriers may be removed during the construction day, but must be re-installed after construction has stopped for the day and/or when heavy precipitation is imminent;

b. Where waterbodies are adjacent to the Construction ROW, install sediment barriers along the edge of the Construction ROW, as necessary, to contain spoil and sediment within the Construction ROW; and

c. Use trench plugs at all waterbody crossings, as necessary, to prevent diversion of water into upland portions of the pipeline trench and to keep any accumulated trench water out of the waterbody.

12. Trench Dewatering

Dewater the trench (either on or off the Construction ROW) in a manner that does not cause erosion and does not result in heavily silt-laden water flowing into any waterbody. Remove the dewatering structures as soon as possible after the completion of dewatering activities.

C. Restoration

1. Use **segregated materials from the double-ditching technique or** clean gravel or native cobbles for the upper 1 foot of trench backfill in all waterbodies that contain coldwater fisheries.
2. For open-cut crossings, stabilize waterbody banks and install temporary sediment barriers within 24 hours of completing in-stream construction activities. For dry-ditch crossings, complete streambed and bank stabilization before returning flow to the waterbody channel.
3. Return all waterbody banks to preconstruction contours or to a stable angle of repose as approved by the EI.
4. Application of riprap for bank stabilization must comply with USACE, or its delegated agency, permit terms and conditions.
5. Unless otherwise specified by state permit, limit the use of riprap to areas where flow conditions preclude effective vegetative stabilization techniques such as seeding and erosion control fabric.
6. **Revegetate disturbed riparian areas in accordance with Bison's Reclamation Plan. Riparian areas that are currently grass-forb dominated will be sown with an appropriate grass-forb mix, and riparian areas that are currently scrub-shrub will be seeded with an appropriate grass-forb-shrub mix.**
7. Install a permanent slope breaker across the Construction ROW at the base of slopes greater than 5 percent that are less than 50 feet from the waterbody, or as needed to prevent sediment transport into the waterbody. In addition, install sediment barriers as outlined in the Plan.

   In some areas, with the approval of the EI, an earthen berm may be suitable as a sediment barrier adjacent to the waterbody.
8. Sections V.C.3. through V.C.6. above also apply to those perennial or intermittent streams not flowing at the time of construction.

D. Post-Construction Maintenance

1. Limit vegetation maintenance adjacent to waterbodies to allow a riparian strip at least 25 feet wide, as measured from the waterbody's mean high water mark, to permanently revegetate with native plant species across the entire Construction ROW. **Bison will not be cutting vegetation as part of routine maintenance. If and when areas need to be mowed or trees need to be cut for these surveys, FERC will be notified before such mowing or tree cutting takes place.**
2. Do not use herbicides or pesticides in or within 100 feet of a waterbody except as allowed by the appropriate land management or state agency.

VI. Wetland Crossing

A. General

1. The Project Sponsor shall conduct a wetland delineation using the current federal methodology and file a wetland delineation report with the Secretary before construction. This report shall identify:

   a. by milepost all wetlands that would be affected;

   b. the National Wetlands Inventory (NWI) classification for each wetland;

   c. the crossing length of each wetland in feet; and

   d. the area of permanent and temporary disturbance that would occur in each wetland by NWI classification type.

   The requirements outlined in this section do not apply to wetlands in actively cultivated or rotated cropland. Standard upland protective measures, including workspace and topsoiling requirements, apply to these agricultural wetlands.

2. Route the pipeline to avoid wetland areas to the maximum extent possible. If a wetland cannot be avoided or crossed by following an existing ROW, route the new pipeline in a manner that minimizes disturbance to wetlands. Where looping an existing pipeline, overlap the existing pipeline ROW with the new construction ROW. In addition, locate the loop line no more than 25 feet away from the existing pipeline unless site-specific constraints would adversely affect the stability of the existing pipeline.

3. Limit the width of the Construction ROW to 75 feet or less. Prior written approval of the Director is required where topographic conditions or soil limitations require that the Construction ROW width within the boundaries of a federally delineated wetland be expanded beyond 75 feet. Early in the planning process, the Project Sponsor is encouraged to identify site-specific areas where existing soils lack adequate unconfined compressive strength that would result in excessively wide ditches and/or difficult-to-contain spoil piles.

4. **A buffer zone of 15 feet must be maintained for wetlands that encroach into the construction ROW (but do not cross the entire construction ROW). Bison will maintain a minimum 75-foot-wide construction ROW. Where such wetlands encroach into one side of the construction ROW, Bison will neck down on that side of the construction ROW to avoid the wetland, unless the pipeline cannot be micro-routed to avoid this wetland, and the wetland encroaches into the minimum 75-foot-wide construction ROW. Wetlands that cannot be avoided (decision to be made by the EI in consultation with the FERC/BLM Monitor) within the minimum 75-foot-wide construction ROW will be impacted. All required wetland buffers should be fenced to demarcate the edge of the buffer zone.** Wetland boundaries and buffers must be clearly marked in the field with signs and/or highly visible flagging until construction-related ground disturbing activities are complete.

5. Implement the measures of Sections V. and VI. in the event a waterbody crossing is located within or adjacent to a wetland crossing. If all measures of Sections V. and VI. cannot be met, the Project Sponsor must file with the Secretary a site-specific crossing plan for review and written approval by the Director before construction. This crossing plan shall address at a minimum:
   a. spoil control;
   b. equipment bridges;
   c. restoration of waterbody banks and wetland hydrology;
   d. timing of the waterbody crossing;
   e. method of crossing; and
   f. size and location of all extra work areas.
6. Do not locate aboveground facilities in any wetland, except where the location of such facilities outside of wetlands would prohibit compliance with United States Department of Transportation (DOT) regulations.

B. Installation

1. Extra Work Areas and Access Roads
   a. Locate all extra work areas (such as staging areas and additional spoil storage areas) at least 50 feet away from wetland boundaries, except where the adjacent upland consists of actively cultivated or rotated cropland or other disturbed land.
   b. The Project Sponsor shall file with the Secretary, for review and written approval by the Director, a site-specific construction plan for each extra work area with a less than 50-foot setback from wetland boundaries (except where adjacent upland consists of actively cultivated or rotated cropland or other disturbed land) and a site-specific explanation of the conditions that will not permit a 50-foot setback.
   c. Limit clearing of vegetation between extra work areas and the edge of the wetland to the certificated Construction ROW.
   d. The Construction ROW may be used for access when the wetland soil is firm enough to avoid rutting or the Construction ROW has been appropriately stabilized to avoid rutting (e.g., with timber riprap, prefabricated equipment mats, or terra mats).

      In wetlands that cannot be appropriately stabilized, all construction equipment other than that needed to install the wetland crossing shall use access roads located in upland areas. Where access roads in upland areas do not provide reasonable access, limit all other construction equipment to one pass through the wetland using the Construction ROW.

e. Other than the Construction ROW, the only access roads that may be used in wetlands without Director-approval are those existing roads that can be used with no modification and no impact on the wetland.

2. Crossing Procedures

a. Comply with USACE, or its delegated agency, permit terms and conditions.

b. Assemble the pipeline in an upland area unless the wetland is dry enough to adequately support skids and pipe.

c. Use "push-pull" or "float" techniques to place the pipe in the trench where water and other site conditions allow.

d. Minimize the length of time that topsoil is segregated and the trench is open.

e. Limit construction equipment operating in wetland areas to that needed to clear the Construction ROW, dig the trench, fabricate and install the pipeline, backfill the trench, and restore the Construction ROW.

f. Cut vegetation just aboveground level, leaving existing root systems in place, and remove it from the wetland for disposal.

g. Limit pulling of tree stumps and grading activities to directly over the trenchline. Do not grade or remove stumps or root systems from the rest of the Construction ROW in wetlands unless the Chief Inspector and EI determine that safety-related construction constraints require grading or the removal of tree stumps from under the working side of the Construction ROW.

h. Segregate the top 1 foot of topsoil from the area disturbed by trenching, except in areas where standing water is present or soils are saturated or frozen. Immediately after backfilling is complete, restore the segregated topsoil to its original location.

i. Do not use rock, soil imported from outside the wetland, tree stumps, or brush riprap to support equipment on the Construction ROW.

j. If standing water or saturated soils are present, or if construction equipment causes ruts or mixing of the topsoil and subsoil in wetlands, use low-ground-weight construction equipment or operate normal equipment on timber riprap, prefabricated equipment mats, or terra mats.

k. Do not cut trees outside of the approved construction work area to obtain timber for riprap or equipment mats.

l. Attempt to use no more than two layers of timber riprap to support equipment on the Construction ROW.

m. Remove all project-related material used to support equipment on the Construction ROW upon completion of construction.

3. Temporary Sediment Control

   Install sediment barriers (as defined in Section IV.F.2.a. of the Plan) immediately after initial disturbance of the wetland or adjacent upland. Sediment barriers must be properly maintained throughout construction and reinstalled as necessary (such as after backfilling of the trench). Except as noted below in Section VI.B.3.c., maintain sediment barriers until replaced by permanent erosion controls or restoration of adjacent upland areas is complete. Temporary erosion and sediment control measures are addressed in more detail in the Plan.

   a. Install sediment barriers across the entire Construction ROW at all wetland crossing where necessary to prevent sediment flow into the wetland. In the travel lane, these may consist of removable sediment barriers or drivable berms. Removable sediment barriers can be removed during the construction day, but must be re-installed after construction has stopped for the day and/or when heavy precipitation is imminent.

   b. Where wetlands are adjacent to the Construction ROW and the Construction ROW slopes toward the wetland, install sediment barriers along the edge of the Construction ROW, as necessary, to prevent sediment flow into the wetland.

   c. Install sediment barriers along the edge of the Construction ROW, as necessary, to contain spoil and sediment within the Construction ROW through wetlands. Remove these sediment barriers during ROW cleanup.

4. Trench Dewatering

   Dewater the trench (either on or off the Construction ROW) in a manner that does not cause erosion and does not result in heavily silt-laden water flowing into any wetland. Remove the dewatering structures as soon as possible after the completion of dewatering activities.

C. Restoration

1. Where the pipeline trench may drain a wetland, construct trench breakers and/or seal the trench bottom, as necessary, to maintain the original wetland hydrology.
2. For each wetland crossed, install a trench breaker at the base of slopes near the boundary between the wetland and adjacent upland areas. Install a permanent slope breaker across the Construction ROW at the base of slopes greater than 5 percent where the base of the slope is less than 50 feet from the wetland, or as needed to prevent sediment transport into the wetland. In addition, install sediment barriers as outlined in the Plan. In some areas, with the approval of the EI, an earthen berm may be suitable as a sediment barrier adjacent to the wetland.
3. Do not use fertilizer, lime, or mulch unless required in writing by the appropriate land management or state agency.
4. Consult with the appropriate land management or state agency to develop a project-specific wetland restoration plan. The restoration plan should include measures for re-establishing herbaceous and/or woody species, controlling the invasion and

spread of undesirable exotic species (e.g., purple loosestrife and phragmites), and monitoring the success of the revegetation and weed control efforts. Provide this plan to the FERC staff upon request.

5. Until a project-specific wetland restoration plan is developed and/or implemented, temporarily revegetate the Construction ROW with annual ryegrass at a rate of 40 pounds/acre (unless standing water is present), **except for BLM lands in Wyoming**.
6. Ensure that all disturbed areas successfully revegetate with wetland herbaceous and/or woody plant species in **accordance with Bison's Wetland Restoration Plan**.
7. Remove temporary sediment barriers located at the boundary between wetland and adjacent upland areas after upland revegetation and stabilization of adjacent upland areas are judged to be successful as specified in Section VII.A.5. of the Plan.

D. Post-Construction Maintenance

1. Do not conduct vegetation maintenance over the full width of the Permanent ROW in wetlands. **Bison will not be cutting vegetation as part of routine maintenance. If and when areas need to be mowed or trees need to be cut for these surveys, FERC will be notified before such mowing or tree cutting takes place.**
2. Do not use herbicides or pesticides in or within 100 feet of a wetland, except as allowed by the appropriate land management agency or state agency.
3. Monitor and record the success of wetland revegetation annually for the first 3 years after construction or until wetland revegetation is successful. At the end of 3 years after construction, file a report with the Secretary identifying the status of the wetland revegetation efforts. Include the percent cover achieved and problem areas (weed invasion issues, poor revegetation, etc.). Continue to file a report annually until wetland revegetation is successful.
4. Wetland revegetation shall be considered successful if the cover of herbaceous and/or woody species is at least 80 percent of the type, density, and distribution of the vegetation in adjacent wetland areas that were not disturbed by construction. If revegetation is not successful at the end of 3 years, develop and implement (in consultation with a professional wetland ecologist) a remedial revegetation plan to actively revegetate the wetland. Continue revegetation efforts until wetland revegetation is successful.

VII. Hydrostatic Testing

A. Notification Procedures and Permits

1. Apply for state-issued water withdrawal permits, as required.

2. Apply for National Pollutant Discharge Elimination System (NPDES) or state-issued discharge permits, as required.
3. Notify appropriate state agencies of intent to use specific sources at least 48 hours before testing activities unless they waive this requirement in writing.

B. General

1. Perform non-destructive testing of all pipeline section welds or hydrotest the pipeline sections before installation under waterbodies or wetlands.
2. If pumps used for hydrostatic testing are within 100 feet of any waterbody or wetland, **or within 500 feet of any waterbody or wetland on BLM-managed lands**, address the operation and refueling of these pumps in the Project's Spill Prevention, Control, and Countermeasures (SPCC) Plan.
3. The Project Sponsor shall file with the Secretary before construction a list identifying the location of all waterbodies proposed for use as a hydrostatic test water source or discharge location.

C. Intake Source and Rate

1. Screen the intake hose to prevent entrainment of fish.
2. Do not use state-designated exceptional value waters, waterbodies which provide habitat for federally-listed threatened or endangered species, or waterbodies designated as public water supplies, unless appropriate federal, state, and/or local permitting agencies grant written permission.
3. Maintain adequate flow rates to protect aquatic life, provide for all waterbody uses, and provide for downstream withdrawals of water by existing users.
4. Locate hydrostatic test manifolds outside wetlands and riparian areas to the maximum extent practicable.

D. Discharge Location, Method, and Rate

1. Regulate discharge rate, use energy dissipation device(s), and install sediment barriers, as necessary, to prevent erosion, streambed scour, suspension of sediment, or excessive streamflow.
2. Do not discharge into state-designated exceptional value waters, waterbodies which provide habitat for federally-listed threatened or endangered species, or waterbodies designated as public water supplies, unless appropriate federal, state, and local permitting agencies grant written permission.