Procedures for Sampling with the HydraSleeve

Collecting a ground-water sample with a HydraSleeve is a simple one-person operation.

Note: Before deploying the HydraSleeve in the well, collect the depth-to-water measurement that you will use to determine the preferred position of the HydraSleeve in the well. This measurement may also be used with measurements from other wells to create a ground-water contour map. If necessary, also measure the depth to the bottom of the well to verify actual well depth to confirm your decision on placement of the HydraSleeve in the water column.

Measure the correct amount of tether needed to suspend the HydraSleeve in the well so that the weight will rest on the bottom of the well (or at your preferred position in the well). Make sure to account for the need to leave a few feet of tether at the top of the well to allow recovery of the sleeve

Note: Always wear sterile gloves when handling and discharging the HydraSleeve.

I. Assembling the HydraSleeve

1. Remove the HydraSleeve from its packaging, unfold it, and hold it by its top.
2. Crimp the top of the HydraSleeve by folding the hard polyethylene reinforcing strips at the holes.
3. Attach the spring clip to the holes to ensure that the top will remain open until the sampler is retrieved.
4. Attach the tether to the spring clip by tying a knot in the tether.

Note: Alternatively, attach the tether to one (NOT both) of the holes at the top of the Hydrasleeve by tying a knot in the tether.

5. Fold the flaps with the two holes at the bottom of the HydraSleeve together and slide the weight clip through the holes.
6. Attach a weight to the bottom of the weight clip to ensure that the HydraSleeve will descend to the bottom of the well.

Copyright 2010 GeoInsight

II. Deploying the HydraSleeve

1. Using the tether, carefully lower the HydraSleeve to the bottom of the well, or to your preferred depth in the water column

   During installation, hydrostatic pressure in the water column will keep the self-sealing check valve at the top of the HydraSleeve closed, and ensure that it retains its flat, empty profile for an indefinite period prior to recovery.

Note: Make sure that it is not pulled upward at any time during its descent. If the HydraSleeve is pulled upward at a rate greater than 0.5'/second at any time prior to recovery, the top check valve will open and water will enter the HydraSleeve prematurely.

2. Secure the tether at the top of the well by placing the well cap on the top of the well casing and over the tether.

Note: Alternatively, you can tie the tether to a hook on the bottom of the well cap (you will need to leave a few inches of slack in the line to avoid pulling the sampler up as the cap is removed at the next sampling event).

III. Equilibrating the Well

The equilibration time is the time it takes for conditions in the water column (primarily flow dynamics and contaminant distribution) to restabilize after vertical mixing occurs (caused by installation of a sampling device in the well).

- Situation: The HydraSleeve is deployed for the first time or for only one time in a well

  The HydraSleeve is very thin in cross section and displaces very little water (<100 ml) during deployment so, unlike most other sampling devices, it does not disturb the water column to the point at which long equilibration times are necessary to ensure recovery of a representative sample.

  In most cases, the HydraSleeve can be recovered immediately (with no equilibration time) or within a few hours. In regulatory jurisdictions that impose specific requirements for equilibration times prior to recovery of no-purge sampling devices, these requirements should be followed.

- Situation: The HydraSleeve is being deployed for recovery during a future sampling event

  In periodic (i.e., quarterly or semi-annual) sampling programs, the sampler for the current sampling event can be recovered and a new sampler (for the next sampling event)

Copyright 2010 GeoInsight

deployed immediately thereafter, so the new sampler remains in the well until the next sampling event.

Thus, a long equilibration time is ensured and, at the next sampling event, the sampler can be recovered immediately. This means that separate mobilizations, to deploy and then to recover the sampler, are not required. HydraSleeves can be left in a well for an indefinite period of time without concern.

IV. HydraSleeve Recovery and Sample Collection

1. Hold on to the tether while removing the well cap.

2. Secure the tether at the top of the well while maintaining tension on the tether (but without pulling the tether upwards)

3. Measure the water level in the well.

4. In one smooth motion, pull the tether up between 30" to 45" (36" to 54" for the longer HydraSleeve) at a rate of about 1' per second (or faster).

   The motion will open the top check valve and allow the HydraSleeve to fill (it should fill in about 1 to 1.5 times the length of the HydraSleeve). This is analogous to coring the water column in the well from the bottom up.

   When the HydraSleeve is full, the top check valve will close. You should begin to feel the weight of the HydraSleeve on the tether and it will begin to displace water. The closed check valve prevents loss of sample and entry of water from zones above the well screen as the HydraSleeve is recovered.

5. Continue pulling the tether upward until the HydraSleeve is at the top of the well.

6. Decant and discard the small volume of water trapped in the Hydrasleeve above the check valve by turning the sleeve over.

V. Sample Collection

Note: Sample collection should be done immediately after the HydraSleeve has been brought to the surface to preserve sample integrity.

1. Remove the discharge tube from its sleeve.

2. Hold the HydraSleeve at the check valve.

3. Puncture the HydraSleeve just below the check valve with the pointed end of the discharge tube

4. Discharge water from the HydraSleeve into your sample containers.

Copyright 2010 GeoInsight

Control the discharge from the HydraSleeve by either raising the bottom of the sleeve, by squeezing it like a tube of toothpaste, or both.

5. Continue filling sample containers until all are full.

Measurement of Field Indicator Parameters

Field indicator parameter measurement is generally done during well purging and sampling to confirm when parameters are stable and sampling can begin. Because no-purge sampling does not require purging, field indicator parameter measurement is not necessary for the purpose of confirming when purging is complete.

If field indicator parameter measurement is required to meet a specific non-purging regulatory requirement, it can be done by taking measurements from water within a HydraSleeve that is not used for collecting a sample to submit for laboratory analysis (i.e., a second HydraSleeve installed in conjunction with the primary sample collection HydraSleeve [see Multiple Sampler Deployment below]).

Alternate Deployment Strategies

Deployment in Wells with Limited Water Columns

For wells in which only a limited water column exists to be sampled, the HydraSleeve can be deployed with an optional top weight instead of a bottom weight, which collapses the HydraSleeve to a very short (approximately 6" to 9") length, and allows the HydraSleeve to fill in a water column only 36" to 45" in height.

Multiple Sampler Deployment

Multiple sampler deployment in a single well screen can accomplish two purposes:

- It can collect additional sample volume to satisfy site or laboratory-specific sample volume requirements.
- It can accommodate the need for collecting field indicator parameter measurements.
- It can be used to collect samples from multiple intervals in the screen to allow identification of possible contaminant stratification.

Copyright 2010 GeoInsight

It is possible to use up to 3 standard 30" HydraSleeves deployed in series along a single tether to collect samples from a 10' long well screen without collecting water from the interval above the screen.

The samplers must be attached to the tether at both the top and bottom of the sleeve. Attach the tether at the top with a stainless-steel clip (available from the manufacturer). Attach the tether at the bottom using a cable tie. The samplers must be attached as follows (figure 4):

- The first (attached to the tether as described above, with the weight at the bottom) at the bottom of the screen
- The second attached immediately above the first
- The third (attached the same as the second) immediately above the second

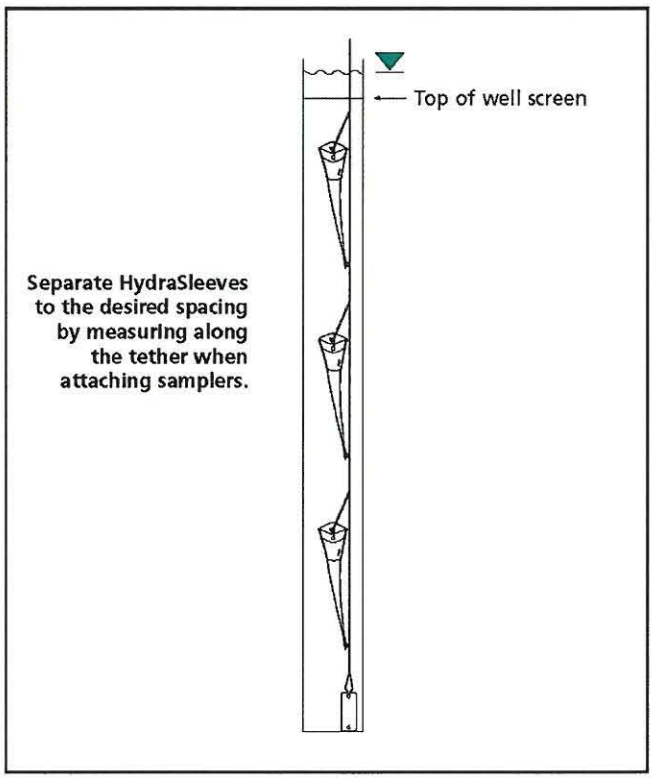

Figure 4. Multiple HydraSleeve deployment.

Alternately, the first sampler can be attached to the tether as described above, a second attached to the bottom of the first using a short length of tether (in place of the weight), and the third attached to the bottom of the second in the same manner, with the weight attached to the bottom of the third sampler (figure 5).

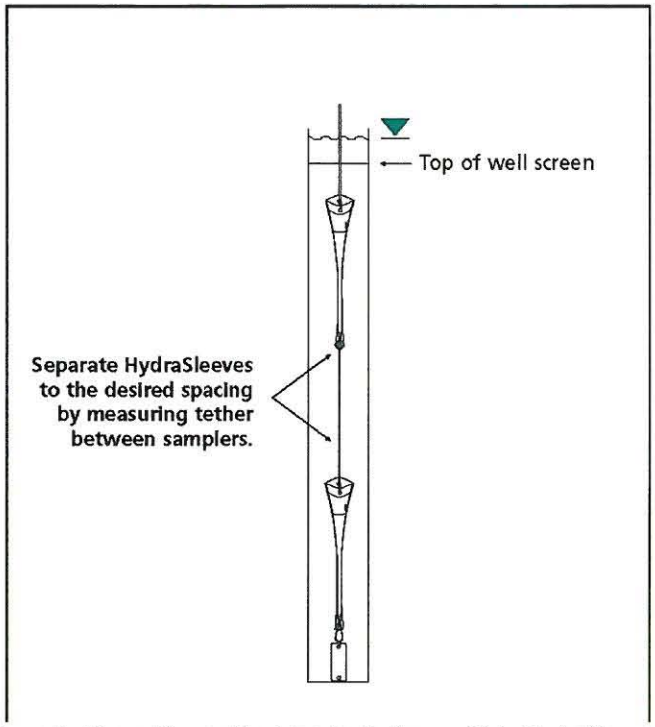

Figure 5. Alternative method for deploying multiple HydraSleeves.

In either case, when attaching multiple HydraSleeves in series, more weight may be required to hold the samplers in place in the well than would be required with a single sampler. Recovery of multiple samplers and collection of samples is done in the same manner as for single sampler deployments.

Post-Sampling Activities

The recovered HydraSleeve and the sample discharge tubing should be disposed as per the solid waste management plan for the site. To prepare for the next sampling event, a new HydraSleeve can be deployed in the well (as described previously) and left in the well until the next sampling event, at which time it can be recovered.

The weight and weight clip can be reused on this sampler after they have been thoroughly cleaned as per the site equipment decontamination plan. The tether may be dedicated to the well and reused or discarded at the discretion of sampling personnel.

Copyright 2010 GeoInsight

References

McAlary, T. A. and J. F. Barker, 1987, Volatilization Losses of Organics During Ground-Water Sampling From Low-Permeability Materials, Ground-Water Monitoring Review, Vol. 7, No. 4, pp. 63-68

Parsons, 2005, Results Report for the Demonstration of No-Purge Ground-Water Sampling Devices at Former McClellan Air Force Base, California; Contract F44650-99-D-0005, Delivery Order DKO1, U.S. Army Corps of Engineers (Omaha District), U.S. Air Force Center for Environmental Excellence, and U.S. Air Force Real Property Agency

Robin, M. J. L. and R. W. Gillham, 1987, Field Evaluation of Well Purging Procedures, Ground-Water Monitoring Review, Vol. 7, No. 4, pp. 85-93

Copyright 2010 GeoInsight

HYDRASleeve

Simple by Design

US Patents No. 6,481,300; No. 6,837,120; others pending

Field Manual

© Copyright 2006, GeoInsight

Introduction

The HydraSleeve groundwater sampler can be used to collect a representative sample for most physical and chemical parameters without purging the well. It collects a whole water sample from a user-defined interval (typically within the well screen), without mixing fluid from other intervals. One or more HydraSleeves are placed within the screened interval of the monitoring well, and a period of time is allocated for the well to re-equilibrate. Hours to months later, the sealed HydraSleeve can be activated for sample collection. When activated, HydraSleeve collects a sample with no drawdown and minimal agitation or displacement of the water column. Once the sampler is full, the one-way reed valve collapses, preventing mixing of extraneous, non-representative fluid during recovery.

Assembly

Assembling the HydraSleeve is simple, and can be done by one person in the field, taking only a minute or two.

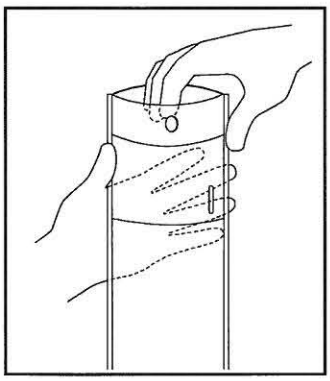

1 Remove HydraSleeve from package and grasp top to "pop" open.

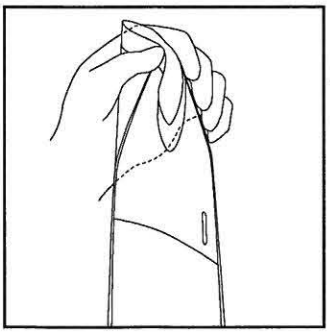

2 Squeeze side fins together at top to bend reinforcing strips outward.

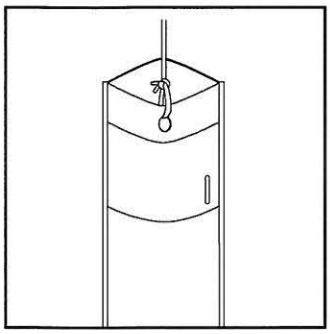

3 Attach line to hole at top of HydraSleeve.

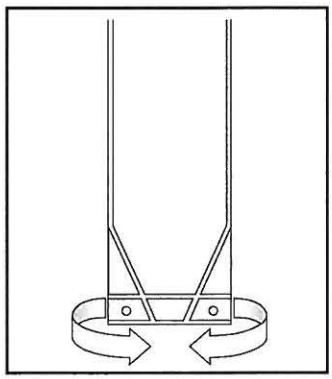

4 Fold the two holes at bottom of HydraSleeve together and attach weight

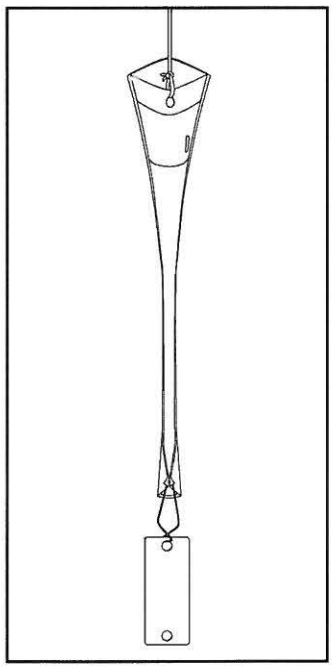

5 Sampler is ready to insert into the well.

Placing the HydraSleeve(s)

To collect a representative groundwater sample without purging, the well must be allowed time to re-equilibrate after placement of the sampler. When any device is lowered into a well, some mixing of the water column occurs. The diameter of the device and its shape greatly affect the degree of mixing. The flat cross-section of the empty HydraSleeve minimizes the disturbance to the water column as the sampler is lowered into position, reducing the time needed for the well to return to equilibrium.

There are three basic methods for holding a HydraSleeve in position as the well equilibrates.

TOP DOWN DEPLOYMENT (Figure 1)
Measure the correct amount of suspension line needed to "hang" the top of the HydraSleeve(s) at the desired sampling depth (in most cases, this will be at the bottom of the sampling zone). The upper end of the tether can be connected to the well cap to suspend the HydraSleeve at the correct depth until activated for sampling.

Note: For deep settings, it may be difficult to accurately measure long segments of suspension line in the field. Factory prepared, custom suspension line and attachment points can be provided.

Figure 1

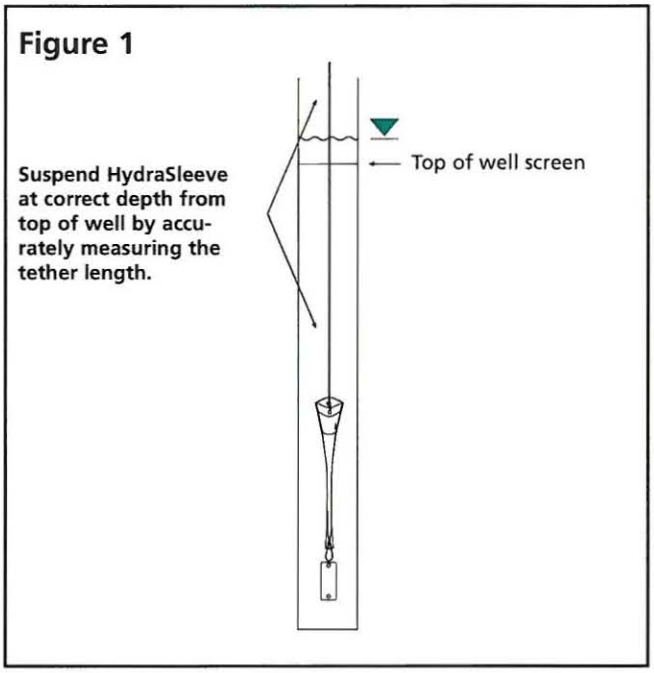

BOTTOM DEPLOYMENT (Figure 2)
Sound the well to determine the exact depth. Lower the weighted HydraSleeve into the well and let it touch the bottom. Very slowly (less than 1/2 foot per second) raise the sampler to the point where the check valve is at the depth the sample is to be collected. Attach the suspension line to the top of the well to suspend it at this depth. (It is often easier to measure a few feet from the bottom of the well up to the sample point, than it is to measure many feet from the top of the well down.)

Alternately, the sampler can be left on the bottom until the well re-equilibrates. For sampling, it can be very slowly pulled (< 1/2 fps) to sampling depth, then activated (see "Sample Collection," p. 6) to collect the sample, and retrieved to the surface.
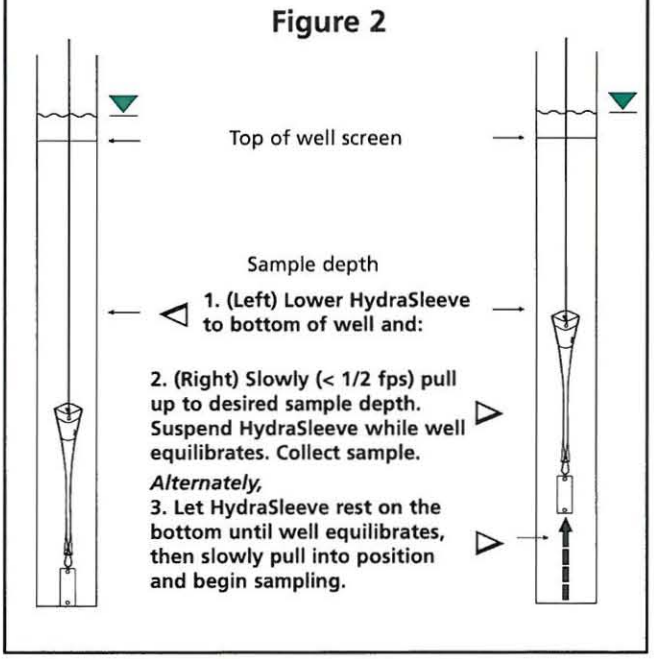
Figure 2