TECHNICAL MEMORANDUM

To: Merry Gamper, BLM
From: Clayton Bell, AMEC Geomatrix
Kevin Van Hook AMEC Geomatrix
Tel: (713) 460-5892
Fax: (713) 460-5896

Date: May 13, 2009

Project: 13655.003
cc: Belinda Salinas, Ultra
Jeff Ingerson, Questar
Jim Sewell, Shell

Subject: Initial Evaluation of Groundwater Vulnerability Assessment
Interim Groundwater/Aquifer Pollution Prevention, Mitigation and Monitoring Plan
Pinedale Oil and Gas Exploration and Development Project
Sublette County, Wyoming

The *Final Interim Groundwater/Aquifer Pollution Prevention, Mitigation and Monitoring Plan, Pinedale Oil and Gas Exploration and Development Project* (Geomatrix 2008a) (Interim Plan) discusses that the risk of chemicals of concern released during oil and gas operations impacting groundwater in the Pinedale Anticline Project Area (PAPA) depends on the vulnerability of the groundwater system. The Interim Plan calls for using the *Wyoming Groundwater Vulnerability Assessment Handbook* (Hamerlinck and Arneson 1998) (Handbook) and applying the associated "Vulnerability/Sensitivity" model to evaluate groundwater vulnerability relative to current and anticipated oil and gas operator practices and procedures in the PAPA. The Interim Plan proposes to use the results of this effort to help evaluate the risk various oil and gas development activities pose to groundwater resources and identify corresponding pollution prevention mitigation measures, if necessary.

After the Interim Plan was issued, initial meetings were held between the USDI Bureau of Land Management (BLM), Wyoming Department of Environmental Quality (DEQ), Region 8 of the U.S. Environmental Protection Agency (EPA), three oil and gas companies (Shell Rocky Mountain Production (Shell), Questar Market Resources (Questar), and Ultra Resources, Inc. (Ultra), and AMEC Geomatrix, Inc. (Geomatrix) to review the scope of the Interim Plan. During these meetings, questions arose regarding the need to rerun the Vulnerability/Sensitivity model so that new model results could be incorporated into the various plans of study being prepared under the Interim Plan. Rerunning the model would only be justified, however, if inputs had been updated since the model was run by the University of Wyoming in 1998 or if new data had been generated that was not available originally. In response, Geomatrix completed an evaluation of the model inputs to determine if updated or new information, if any, warranted rerunning the model for the PAPA. This Technical Memorandum summarizes the results of this effort.

REVIEW OF DRASTIC MODEL

The Wyoming Sensitivity/Vulnerability model is based on the DRASTIC methodology developed for the EPA (Aller et al., 1987). The Handbook defines 'sensitivity' as "the relative ease with which contaminants can move from the surface through various substrates to pollute groundwater." The term 'vulnerability' is defined as incorporating "aquifer sensitivity and the potential for a contaminant to be spilled on the surface." In other words, 'sensitivity' describes an aquifers' susceptibility to contamination based solely on natural physical properties (i.e., depth, geology, conductivity). 'Vulnerability' describes susceptibility to contamination based on an aquifer's physical properties and human activities on the surface (i.e., irrigating cropland, pesticide use).

DRASTIC models assess aquifer sensitivity based on seven parameters:

Depth-to-Initial-Groundwater

Recharge (Net Annual)

Aquifer Media

Soil Media

Topography (slope)

Impact of the Vadose Zone

Conductivity

Each parameter is assigned a sensitivity rating value for every location within the study area. Sensitivity ratings for each of the parameters can range from one to ten, with higher values indicating a higher potential for pollution. For example, because clay soils are less permeable than sandy soils, clay soils would be assigned a lower sensitivity rating value than sandy soils. These values are then multiplied by a weighting coefficient (one to five) to emphasize some parameters more than others according to their relative level of influence. For example, weighting Depth-to-Initial-Groundwater as a 'five' and Topography as a 'one' would imply that Depth-to-Initial-Groundwater is five times as important as Topography when calculating sensitivity/vulnerability. A weighting system was proposed by the original EPA DRASTIC model methodology. This system was generated by an EPA committee of experts using a Delphi (consensus) approach.

The seven parameters mentioned above are used in DRASTIC's pollution potential equation:

$$A_s = DrDw + RrRw + ArAw + SrSw + TrTw + IrIw + CrCw$$

where 'A_s' is the aquifer sensitivity, 'r' is the sensitivity rating, and 'w' is the weight for each factor. This aquifer sensitivity value has no real quantitative meaning, but is used to describe which regions within a study area have a relatively higher potential for groundwater contamination.

In its 1998 model, the Universty of Wyoming modified the EPA DRASTIC methodology in three ways. First, the Wyoming model combined the "Aquifer Media" and "Conductivity" terms into a single parameter called "Geohydrologic Setting". This was done due to a lack of comprehensive data describing the hydrologic characteristics of Wyoming's geological formations, and in order to integrate results from a number of studies addressing the hydrology of specific structural sedimentary basins within the state. Second, the Wyoming model utilized a unique sensitivity rating system to reflect Wyoming's unique hydrogeologic environment and landscape characteristics. Finally, the Wyoming model used equal weights of 'one' for each sensitivity parameter due to the lack of any scientific evidence to support the use of a parameter weighting system.

The six parameters used in the Wyoming model (Hamerlinck and Arneson 1998) are generated from the following base data layers/datasets:

- Bedrock Geology (Green and Drouillard, 1994)
- Surficial Geology (Case, Arneson, and Hallberg, 1998)
- Wells (Hamerlinck and Ameson, 1998, Volume 1, pg 1-37)
- Elevation (USGS, 1997)
- Precipitation (Hamerlinck and Ameson, 1998, Volume 1, pg 1-40)

These datasets are used to derive the six Wyoming DRASTIC model parameters, which are then combined to calculate the relative aquifer sensitivity value for every location within the survey area. This sensitivity value dataset is then combined with datasets of croplands and pesticide use (Hamerlinck and Ameson, 1998, Volume 2, pg II-14) to generate a final groundwater vulnerability map (Figure 1).

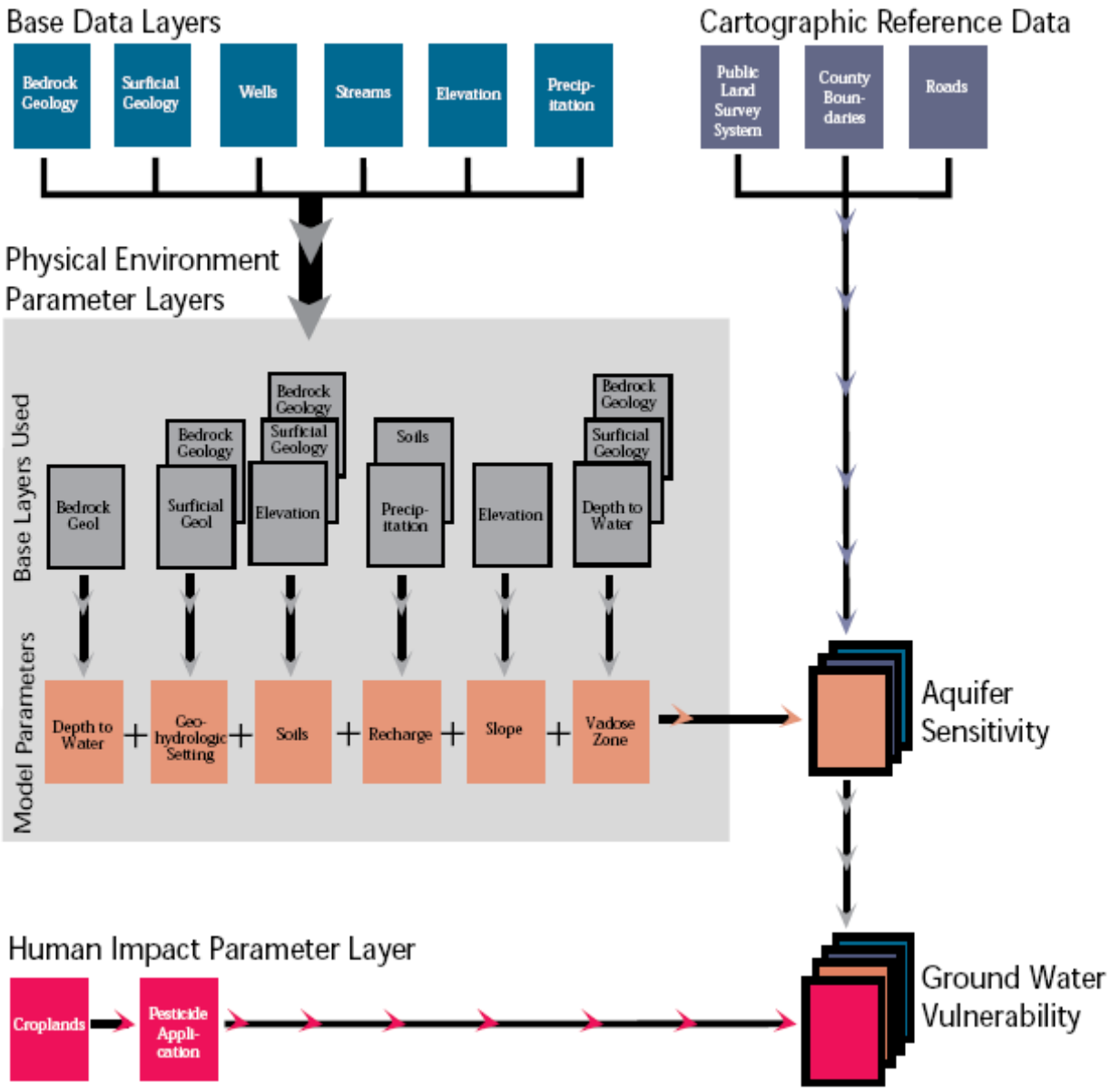

Figure 1: Diagram illustrating Wyoming Groundwater Vulnerability Model development. Reproduced from the *Wyoming Ground Water Vulnerability Assessment Handbook, Volume 1: Background, Model Development, and Aquifer Sensitivity Analysis, Figure IV-I, pg I-36, 1998.*

COMPARISON OF ORIGINAL VS. NEW INPUT DATA

Geomatrix conducted a search of available data published by the BLM, U.S. Geologic Survey (USGS), Wyoming State Engineers Office (SEO), and the Wyoming State Geologic Survey (WSGS) to determine if updated or new base data layers/datasets have been made available since 1998 which would warrant rerunning the model for the PAPA. We also reviewed data compiled in the *Final Hydrogeologic Conceptual Model Report, Pinedale Anticline Project Area, Sublette County, Wyoming* (Geomatrix 2008b). In addition, an internet search for scholarly articles was conducted to determine if any scientific study of the relative influences of the DRASTIC factors could be found. The results of this search are summarized in the following table:

Original Data	New Input Data
Bedrock Geology, (Green and Drouillard, 1994)	No new data available. New data anticipated in July 2009.
Surficial Geology, (Case, Arneson, and Hallberg, 1998)	No new data available. New data anticipated in July 2009.
Wells, (Hamerlinck and Ameson, 1998, Volume 1, pg 1-37)	Wells, SEO Water Rights Database (SEO), and Geomatrix 2008b
Elevation, National Elevation Dataset (NED) 90-meter Digital Elevation Model (DEM), (USGS, 1997)	Elevation, NED 30-meter DEM, (USGS, 1999)
Precipitation, (Hamerlinck and Ameson, 1998, Volume 1, pg 1-40)	Wyoming Water and Climate Map Server, (Dataset of annual rainfall averages from 1971-2000) (WRDS, 2006)
Model assigns each parameter equal weight	No scientific study of relative influence was found

DISCUSSION OF DRASTIC MODEL INPUTS AND WEIGHTING

This section provides a discussion of the six model parameter inputs used by the University of Wyoming in their 1998 DRASTIC model relative to new input data shown in the table above. We also provide a discussion of parameter weighting.

<u>Depth-to-Initial-Groundwater</u>

The University of Wyoming generated the Depth-to-Initial-Groundwater parameter from the Wells base data layer (Hamerlinck and Ameson, 1998, Volume 1, pg 1-37) and the Bedrock Geology base data layer (Green and Drouillard1994). Using both of these data sources, the University of Wyoming assigned a sensitivity rating for Depth-to-Initial-Groundwater.

An updated well permits database containing wells drilled as of 2007 is available from the SEO. However, while this database lists the depth to the main water-bearing zone, it does not provide the depth to the first encountered water-bearing zone. As part of implementing the Interim Plan, Geomatrix inventoried approximately 400 water wells in the PAPA. Of those, we were able to obtain SEO well completion records for 215 wells from which we tabulated data on depths to both the first and main water-bearing units. For approximately 65 percent of the wells, the main water-bearing formation was greater than 50 feet below the first encountered water-bearing zone. For many wells, the main water-bearing formation was several hundred feet below the first encountered water-bearing zone. Therefore, in our opinion, the new dataset from the SEO well permits database is not suitable for generating an updated Depth-to-Initial-Groundwater parameter layer, and does not warrant re-running the DRASTIC model.

In addition, since 1998, no new Wyoming bedrock geology or surficial geology datasets have become available. Geomatrix contacted the WSGW in early March to inquire about the status of Pinedale Surficial and Bedrock Geology maps (100k quadrangle). The WSGS indicated that they are scheduled to be completed in July 2009.

Topography

The elevation dataset used by the University of Wyoming for the Topography parameter was taken from the NED 90-meter resolution DEM (USGS, 1997). Since then, a USGS NED 30-meter resolution DEM has been published (USGS, 1999). However, given the size of the Pinedale Anticline study area (approximately 308 square miles), this higher resolution data would not likely alter regional topographic trends previously identified by the 90-meter DEM.

Soil Media

The Soil Media parameter for the 1998 DRASTIC model was derived from the Wyoming State Soils Map and generalized soils maps of individual Wyoming counties (Hamerlinck and Arneson, 1998, Volume 1, pg I-48). These maps were derived from the Bedrock Geology dataset (Green and Drouillard, 1994), Surficial Geology dataset (Case, Ameson, and Hallberg 1998), and Elevation dataset (USGS 1997) using the five soil-forming factor model, as well as available soil surveys, reports of the Natural Resource Conservation Service (NRCS), U.S. Forest Service, BLM, and University of Wyoming. The soil survey for Sublette County was not available in 1998 and has not been completed to date. Moreover, since 1998, no new Wyoming bedrock geology or surficial geology datasets has become available. Geomatrix contacted the WSGW in

early March 2009 to inquire about the status of Pinedale Surficial and Bedrock Geology maps (100k quadrangle). These are scheduled to be completed in July 2009. An updated 30-meter elevation dataset (USGS 1999) is available. However, given the size of the Pinedale Anticline study area (approximately 308 square miles), this higher resolution data would not likely alter regional trends in soil mapping units previously identified using the 90-meter DEM dataset.

Recharge

The University of Wyoming generated the Recharge parameter in their 1998 model by assigning recharge fraction values (percent) to the Soil Media dataset based on soil type, and then multiplying these percent values by the average annual precipitation values from the Precipitation base data layer to calculate a value for average annual recharge. A more recent data set of annual rainfall averages is now available from the Wyoming Water and Climate Map Server (WRDS 2006). This dataset contains annual rainfall averages for the State of Wyoming from 1971-2000, relative to the original Precipitation base dataset containing annual rainfall averages from 1961-1990 (Hamerlinck and Ameson, 1998, Volume 1, pg 1-40). Geomatrix performed a visual comparison of the original 1961-1990 dataset and the updated 1971-2000 dataset by overlaying the layers in GIS. This visual comparison did not reveal any appreciable differences between the two layers that would warrant rerunning the model.

Geohydrologic Setting

In their 1998 model, the University of Wyoming generated the Geohydrologic Setting parameter by assigning a sensitivity rating value to describe the generalized hydraulic characteristics of the uppermost aquifer as represented by the Bedrock Geology dataset (Green and Drouillard, 1994), the Surficial Geology dataset (Case, Ameson, and Hallberg, 1998), and descriptions of the formations from the Wyoming Water Resources Research Institute, USGS Hydrologic Investigations Atlases, and USGS Water Supply Papers (Hamerlinck and Arneson 1998, Volume 1, pg I-44). In instances where hydrologic characteristics were not described in the literature, the characteristics were estimated based on the lithology represented by the Bedrock Geology and Surficial Geology base data layers. As mentioned previously, the WSGW indicated that the Pinedale Surficial and Bedrock Geology maps (100k quadrangle) datasets are being updated but will not be completed until at least July 2009. Consequently, no new Wyoming bedrock geology or surficial geology datasets have become available since 1998 that would warrant rerunning the model.

Influence of Vadose Zone Media

The vadose zone in Sublette County, Wyoming is composed of unsaturated shallow bedrock, surficial materials, or a combination of the two. In the 1998 DRASTIC model, the Vadose Zone parameter was generated by assigning a sensitivity rating to the Surficial Geology dataset (Case,

Ameson, and Hallberg, 1998) to represent the composition of each underlying geologic formation or surficial deposit described in the Bedrock Geology dataset (Green and Drouillard, 1994). Each area was then assigned a second sensitivity rating to reflect the possible influence of the underlying bedrock on the composition and properties of the overlying surficial unit. The University of Wyoming then developed and applied a series of formulas to calculate a final composite sensitivity rating value for the influence of vadose zone media from these two rating values. Because no new Wyoming bedrock geology or surficial geology datasets have become available since 1998, rerunning the model to develop new Vadose Zone parameter layer is not justified at this time.

Weighting of Model Parameters

The University of Wyoming DRASTIC model assigned each of the six sensitivity parameters an equal weight of 'one'. The authors of the original model felt that the EPA parameter weighting system lacked scientific justification. In addition to our search for updated parameter data, Geomatrix searched for references, peer-reviewed journal articles, and government publications describing methods used to assign parameter weights. No scientific evaluation of the weighting of DRASTIC sensitivity parameters was found.

CONCLUSIONS

To address questions regarding the need to rerun the Vulnerability/Sensitivity model for the PAPA, Geomatrix completed an evaluation of the model inputs to determine if updated or new information warranted rerunning the model. Based on the results of our evaluation, we do not believe rerunning the DRASTIC model for the PAPA is warranted for several reasons:

1. Only three updated parameter datasets (Wells, Elevation, and Precipitation) have become available since the Wyoming DRASTIC model was run in 1998. Based on our evaluation, the newer datasets are either not appreciably different from the original datasets (Elevation, Precipitation) or are not suitable for use in the DRASTIC model (Wells). Therefore, it is our opinion that rerunning the model with the newer datasets would not substantially improve or alter the 1998 model output.

2. No scientific evaluation regarding the influence of sensitivity parameter weighting on aquifer vulnerability could be found. Consequently, there does not appear to be reasonable scientific basis at this time for re-assigning weights to the parameters and rerunning the model.

Although we do not believe that rerunning the DRASTIC model is warranted at this time, we recommend "ground truthing" the existing DRASTIC output map to provide more accurate delineation of vulnerable areas in the PAPA. The ground truthing should be conducted as a

systematic exercise performed and documented by environmental scientists as a part of the Interim Plan field efforts. Results of the modified aquifer vulnerability map could then be used while completing Tasks 3b and 3c of the Interim Plan.

NUMERICAL MODEL ALTERNATIVE

Previous groundwater vulnerability assessment work using the DRASTIC model focused on identifying portions of the groundwater system that were most likely to be vulnerable to contaminant releases from the surface, using assumed aquifer sensitivity parameters such as depth to water, soil properties, and aquifer material properties. DRASTIC model results can be a suitable general screening tool to help identify portions of the groundwater system that may be vulnerable to contamination arising from surface releases. However, this approach does not take into account groundwater flow, and does not have the ability to predict the fate and transport of contaminants that are already in the system or enter the system from future surface releases.

Rather than rely on DRASTIC modeling results to indicate the relative vulnerability of the groundwater resources in the PAPA, we believe that consideration should be given to developing a numerical groundwater flow and transport model. The purpose of developing a groundwater flow and transport model would be to serve as a decision-making, risk identification, and risk reduction tool. Existing well and hydrogeologic data coupled with data generated from the completion of the Interim Plan's hydrogeologic data gaps study would be used to design and calibrate the model. Based on aquifer properties, flow direction, and fluxes, the model would have the ability to simulate the transport of potential contaminants through the groundwater system and predict impacts to individual receptors, such as well owners or the New Fork River. This modeling approach would allow decision makers to prioritize areas for implementation of mitigation measures, corrective action (if required), or for further characterization. The model would also have the ability to be quickly and easily updated as further characterization is completed.

REFERENCES CITED

Aller, L., T. Bennett, J. Lehr, and R. Petty. *DRASTIC: A Standardized System for Evaluating Groundwater Pollution Potential Using Hydrogeologic Settings*. U.S. Environmental Protection Agency, Washington,D.C., EPA/600/2-85/018.

Case, J.C., Arneson, C.S.,and L.L. Hallberg. 1998. *Surficial Geology Map of Wyoming Digitally at 1:500,000 Scale*. Wyoming State Geological Survey Hazards Section Digital Map 98-1. Wyoming State Geological Survey, Laramie, Wyoming.

Geomatrix Consultants, Inc. 2008a. *Final Interim Groundwater/Aquifer Pollution Prevention, Mitigation, and Monitoring Plan. Pinedale Anticline Oil and Gas Exploration and Development Project, Sublette County, Wyoming.* Prepared for U.S. Department of Interior, Bureau of Land Management, Pinedale Field Office, Wyoming Department of Environmental Quality, Water Quality Division, U.S. Environmental Protection Agency, Region 8, Shell Rocky Mountain Production, Questar Market Resources, and Ultra Resources, Inc. December.

Geomatrix Consultants, Inc. 2008b. *Final Hydrogeologic Conceptual Model Report, Pinedale Anticline Project Area, Sublette County, Wyoming*. March.

Green, G.N. and P.H. Drouillard. 1994. *The Digital Geologic Map of Wyoming in ARC/ INFO Format*. U.S. Geological Survey Open File Report 94-0425.

Hamerlinck, J.D., and Ameson, C.S., 1998, *Wyoming Ground Water Vulnerability Assessment Handbook: University of Wyoming, Laramie, Wyoming, Spatial Data Visualization Center*, Report SDVC 98-01, 2 Volumes.

State Engineer's Office (SEO), Water Rights Database. <http://seo.state.wy.us>.

U.S. Geological Survey, 1997, *Digital Elevation Model (90 m) for Wyoming*. Spatial Data and Visualization Center, Laramie, Wyoming.

U.S. Geological Survey (USGS), 1999, *National Elevation Dataset (1/3 arc second),* EROS Data Center, Sioux Fall, South Dakota.

Wyoming Water Data System (WRDS), *Processed Annual Precipitation 1971-2000 for Wyoming at 1:250,000*, 2006, Wyoming Water and Climate Map Server, University of Wyoming. <http://ims2.wrds.uwyo.edu/Website/Statewide/>.