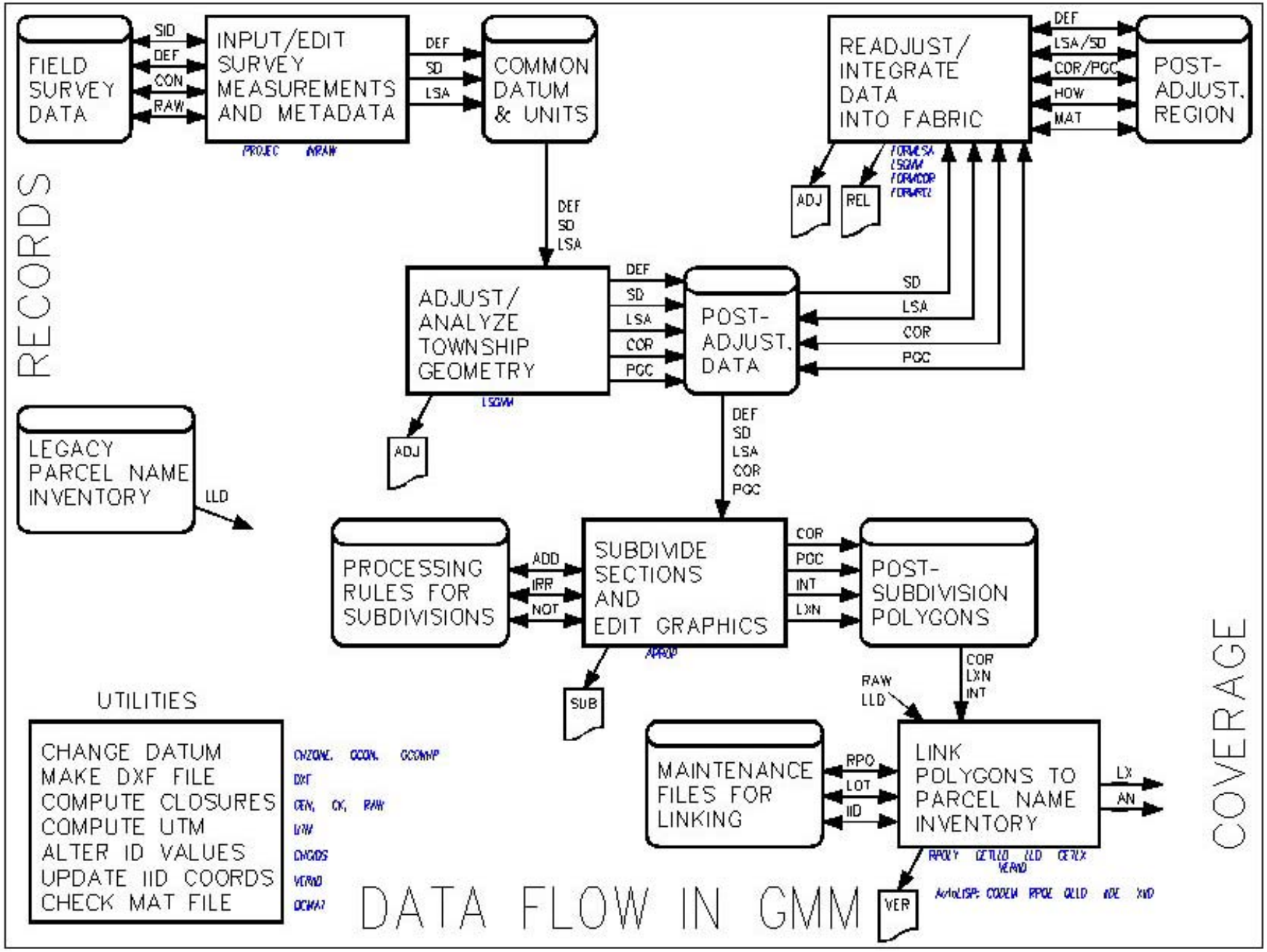

DATA FLOW IN GMM