4310-84P

DEPARTMENT OF THE INTERIOR

Bureau of Land Management

43 CFR Parts 3160 and 3170

[17X.LLWO310000.L13100000.PP0000]

RIN 1004-AE15

Onshore Oil and Gas Operations; Federal and Indian Oil and Gas Leases; Site Security

AGENCY: Bureau of Land Management, Interior.

ACTION: Final rule.

SUMMARY: This final rule replaces Onshore Oil and Gas Order No. 3, Site Security (Order 3), with new regulations codified in the Code of Federal Regulations (CFR). The final rule establishes minimum standards for oil and gas facility site security, and includes provisions to ensure that oil and gas produced from Federal and Indian (except Osage Tribe) oil and gas leases are properly and securely handled, so as to ensure accurate measurement, production accountability, and royalty payments, and to prevent theft and loss.

The BLM developed this rule based on the proposed rule that was published in the Federal Register on July 13, 2015 (80 FR 40768), and tribal and public comments the BLM received on the proposed rule. This rule strengthens the BLM's policies governing production verification and accountability by updating and replacing the existing requirements of Order 3 to address changes in technology and industry practices that have occurred in the 25 years since Order 3 was issued, and to respond to

recommendations made by the Government Accountability Office (GAO) and the Office of the Inspector General (OIG) with respect to the BLM's production verification efforts.

Like the proposed rule, the final rule addresses Facility Measurement Points (FMPs), site facility diagrams, the use of seals, bypasses around meters, documentation, recordkeeping, commingling, off-lease measurement, the reporting of incidents of unauthorized removal or mishandling of oil and condensate, and immediate assessments for certain acts of noncompliance. The final rule also establishes a process for the BLM to consider variances from the requirements of the final regulation.

Some of the key changes from the proposed rule that are incorporated into the final rule include:

- Additional exemptions from the final rule's commingling requirements;
- A streamlined FMP application and approval process;
- Simplified site facility diagram submissions; and
- Clarifications to tank gauging procedures and frequency.

The BLM believes that this final rule, as well as the final rules to update and replace Onshore Oil and Gas Order No. 4 (Order 4), related to measurement of oil, and Onshore Oil and Gas Order No. 5 (Order 5), related to measurement of gas enhance the BLM's overall production verification and accountability program.

DATES: The final rule is effective on [INSERT DATE 60 DAYS AFTER DATE OF PUBLICATION IN THE FEDERAL REGISTER].

ADDRESSES: Mail: U.S. Department of the Interior, Director (630), Bureau of Land Management, Mail Stop 2134 LM, 1849 C St., NW, Washington, DC 20240, Attention: 1004–AE15.

Personal or messenger delivery: 20 M Street, SE, Room 2134LM, Washington, DC 20003.

FOR FURTHER INFORMATION CONTACT: Michael Wade, BLM Colorado State Office, at 303-239-3737, for information about the requirements of this final rule, or Steven Wells, Division Chief, Fluid Minerals Division, 202–912–7143, for information regarding the BLM's Fluid Minerals Program. Persons who use a telecommunications device for the deaf (TDD) may call the Federal Relay Service at 1-800-877-8339 to contact the above individuals during normal business hours. The Service is available 24 hours a day, 7 days a week to leave a message or question with the above individual. You will receive a reply during normal business hours.

SUPPLEMENTARY INFORMATION:

I. Executive Summary and Background

II. Overview of the Final Rule, Section-by-Section Analysis, and Response to Comments

III. Overview of Public Involvement and Consistency with GAO Recommendations

IV. Procedural Matters

I. Executive Summary and Background

Under applicable law, royalties are owed on all production removed or sold from Federal and Indian oil and gas leases, as well as on any oil or gas that is avoidably lost during production. The basis for those royalty payments is the measured production from those leases. In the fiscal year (FY) 2015 sales year, onshore Federal oil and gas leases sold 180 million barrels (bbl) of oil,[1] 2.50 trillion cubic feet of natural gas,[2] and 2.6

[1] Figures related to total production of oil include 168 million bbl of regularly classified oil, plus additional sales of condensate, sweet and sour crude, black wax crude, other liquid hydrocarbons, inlet scrubber and

billion gallons of natural gas liquids, with a market value of more than $17.7 billion and generating royalties of almost $2.0 billion. Nearly half of these revenues were distributed to the States in which the leases are located. Leases on tribal and Indian lands sold 59 million bbl of oil, 239 billion cubic feet of natural gas, 182 million gallons of natural gas liquids, with a market value of over $3.6 billion and generating royalties of over $0.6 billion, which were distributed in their entirety to the applicable tribes and individual allottee owners.

As explained in the preamble for the proposed rule, given the magnitude of this production and the BLM's statutory and management obligations, it is critically important that the BLM ensure that operators accurately measure, properly report, and account for all production. This final rule helps the BLM achieve that objective by updating and replacing Order 3's requirements with regulations codified in the CFR that reflect changes in oil and gas measurement practices and technology since Order 3 was first promulgated in 1989.[3]

Specifically, the requirements in this rule ensure the proper and secure handling of production from Federal and Indian (except Osage Tribe) oil and gas leases. The proper handling of production is essential to accurate measurement, proper reporting, and overall production accountability, all of which are necessary to ensure that the American public, as well as Indian tribes and allottees, receive the royalties to which they are entitled on oil and gas produced from Federal and Indian leases, respectively.

---

drip or scrubber condensate, and avoidable oil losses, all of which are considered to be part of oil sales for accounting purposes.

[2] Includes all processed and unprocessed volumes recovered on-lease, nitrogen, fuel gas, coal bed methane, and any volumes of gas avoidably lost due to venting or flaring.

[3] Order 3, which was published in the Federal Register on February 24, 1989 (54 FR 8056), has been in effect since March 27, 1989.

Order 3 was one of seven Onshore Oil and Gas Orders that the BLM issued under its regulations at 43 CFR part 3160.[4] Order 3 primarily supplemented the regulations at 43 CFR § 3162.4 (records and reports), § 3162.5 (environmental safety), § 3162.7 (disposition and measurement of oil and gas production and site security on Federal and Indian (except Osage Tribe) oil and gas leases), subpart 3163 (non-compliance, assessments, and civil penalties), and subpart 3165 (relief, conflicts, and appeals). While the BLM's Onshore Orders have all been published in the Federal Register, both for public comment and in final form, they were never codified in the CFR. With this final rule, the BLM is replacing Order 3 and updating and codifying its requirements regarding site security, as explained below.

The development of this rule was driven largely by internal and external reviews of the BLM's existing production measurement and accountability program. These reviews began in 2007 when the Secretary appointed an independent panel—the Subcommittee on Royalty Management (Subcommittee)—to review the Department's procedures and processes related to the management of mineral revenues and to provide advice to the Department based on that review.[5] In a report dated December 17, 2007, the Subcommittee determined that the BLM's guidance regarding production accountability is "unconsolidated, outdated, and sometimes insufficient" (Subcommittee report, p. 30). The Subcommittee report found that this results in inconsistent and outmoded approaches to production accountability tasks, and the potential loss of royalty revenue.

[4] These regulations provide for the issuance of Onshore Oil and Gas Orders to "implement and supplement" the regulations found in part 3160. 43 CFR 3164.1(a). The Onshore Orders apply nationwide to all Federal onshore and Indian (except Osage Tribe) oil and gas leases.

[5] The Subcommittee was commissioned to report to the Royalty Policy Committee, which was chartered under the Federal Advisory Committee Act to provide advice to the Secretary and other departmental officials responsible for managing mineral leasing activities and to provide a forum for the public to voice concerns about mineral leasing activities. The Royalty Policy Committee's chart has since expired.

The Subcommittee report expressed concern that the applicable "BLM policy and guidance is outdated" and "some policy memoranda have expired" (Subcommittee report, p. 31). The Subcommittee also expressed concern that "BLM policy and guidance have not been consolidated in a single document or publication," which has led to the "BLM's 31 oil and gas field offices using varying policy and guidance" (id.). For example, "some BLM State Offices have issued their own 'Notices to Lessees' for oil and gas operations" (id.). While the Subcommittee recognized that such Notices to Lessees may have a positive effect on some oil and gas field operations, it also observed that they necessarily "lack a national perspective and may introduce inconsistencies among State [Offices]" (id.).

The Subcommittee made a number of recommendations relevant to site security. It recommended that the BLM re-evaluate its regulations and update its policy and guidance on production accountability, including requiring that requests to commingle production from multiple leases, unit participating areas (PAs), or areas subject to communitization agreements (CAs) identify allocation among zones (Subcommittee report, p. 32). The Subcommittee also recommended that the BLM re-evaluate its policies and guidance for royalty-free use of gas in lease operations. It also specifically recommended that the BLM establish a workgroup to evaluate Order 3. In response, the Department formed a fluid minerals team, comprising Departmental employees who are oil and gas experts. Based on its review, the team determined that Order 3 should be updated.

In addition to the Subcommittee report, the GAO and the OIG have performed multiple audits since 2009 and issued reports that included many findings and recommendations addressing similar issues: (1) Report to Congressional Requesters, Oil and Gas

Management, Interior's Oil and Gas Production Verification Efforts Do Not Provide Reasonable Assurance of Accurate Measurement of Production Volumes GAO-10-313 (GAO Report 10-313); (2) Report to Congressional Requesters, Oil and Gas Resources, Interior's Production Verification Efforts: Data Have Improved but Further Actions Needed, GAO 15-39 (GAO Report 15-39); (3) Bureau of Land Management's Oil and Gas Inspection and Enforcement Program, CR-EV-0001-2009 (OIG Report 2009); and (4) Energy Related Management Advisories, CR-IS-MOA-0005-2014 (OIG Report 2014).

In 2010, the GAO found that Interior's measurement regulations and policies do not provide reasonable assurance that oil and gas are accurately measured. Regarding matters relevant to site security, the report found that the BLM lacks regulatory or policy requirements for operators to clearly identify points of royalty measurement, creating challenges for the BLM in verifying production (GAO Report 10-313, p. 34). It also found that the BLM does not have sufficient national policies or a consistent process for approving arrangements that allow operators to commingle production from multiple Federal, Indian, State, and private leases, which also makes it difficult for the agency to verify production (GAO Report 10-313, p. 36). In response, the GAO specifically recommended that the BLM: (1) Develop guidance clarifying when Federal oil and gas may be commingled and establish standardized measurement methods for such circumstances so that production can be adequately measured and verified; (2) Confirm that commingling agreements are consistent with Interior guidance before they are approved, and that the agreements facilitate key production verification activities; and (3) Track all onshore meters, including information about meter location, identification

number, and owner, to help ensure that Interior (through the BLM) is accurately and consistently tracking where and how onshore oil and gas are measured nationwide.

The GAO reiterated some of these concerns in 2015 (GAO Report 15-39). In that report, the GAO acknowledged the improvements the BLM had made in its processes and policies (e.g., issuing additional guidance in 2013 regarding commingling approvals), but reiterated the importance of the BLM updating its regulations related to measurement and site security (GAO Report 15-39, pp. 31-32).

Based in part on its concern that the BLM's production verification efforts do "not provide reasonable assurance that operators are accurately measuring and reporting" the volumes of oil and gas produced from Federal and Indian leases, the GAO included the BLM's onshore oil and gas program on its High Risk List in 2011 (Report to Congressional Committees, High Risk Series, An Update, GAO-11-278 (GAO Report 11-278), p. 15). Because the GAO's recommendations have not yet been fully implemented, including those related to production verification, the onshore oil and gas program has remained on the High Risk List in subsequent updates in 2013 (Report to Congressional Committees, High Risk Series, An Update, GAO-13-283) and 2015 (Report to Congressional Committees, High Risk Series, An Update, GAO-15-290).

The OIG made similar observations as part of its reviews of the BLM's inspection and enforcement program. For example, in 2009 the OIG observed that the BLM's "inspection efforts are hampered because of provisions in the bureau's regulations that have not kept up with modern technology. Most notably, six of the seven Onshore Oil and Gas Orders, which address activities, such as drilling operations, the measurement of oil and gas, and site security, are outdated as they were enacted in the late 1980s and

early 1990s." The OIG specifically recommended that the BLM "(e)nsure that oil and gas regulations are current by updating and issuing onshore orders." (OIG Report 2009, p. 10-11).

The OIG also expressed concern that "(c)urrent BLM policies (with respect to penalties and assessments) do not allow for immediate assessments for chronic offenders. As a result, at times there is little incentive for companies to meet their regulatory responsibilities." (id., p. 13). As a result, the OIG recommended that the BLM "(e)nhance the deterrent for operator noncompliance by increasing the dollar amount of monetary assessments, seeking congressional action for increasing civil penalties, and expanding the infractions for which immediate assessments may be issued." (id., p. 14).

The OIG supplemented these recommendations in 2014 with a series of recommendations that flowed from individual OIG investigations that were consolidated into one report – *Energy Related Management Advisories*, CR-IS-MOA-0005-2014 (Nov. 2014) (OIG Report 2014).[6] That report made a number of recommendations, including the following relevant to this rule:

- Develop and implement procedures to ensure timely receipt of site facility diagrams and ensure that they contain adequate information related to production and sales phases (OIG Report 2014 at 10, 18);
- Take steps to address misreporting associated with off-lease measurement (id.);
- Ensure that adequate information exists regarding on-lease beneficial use in order to identify inappropriate deductions (id., at 12); and

[6] The OIG Report 2014, covered the following investigations: Berry Petroleum Co. & Quinex Energy Corp., DOI-OIG Case File Nos. OI-OG-07-0359-I & OI-OG-07-0389-I; Petrox Resources, Inc., DOI-OIG Case File No. OI-OG-09-0266-I; SEECO, Inc., OIG Case File No. OI-OG-09-0722-1; and TEPPCO Partners, DOI-OIG Case File No. OI-OG-09-0346-I).

- Ensure that Federal measurement points are properly documented and recorded (id. at 21).

In addition to the concerns from these entities, the BLM also recognized, based on its own experience, that its site security requirements needed strengthening. For example, as explained in the proposed rule, it is not uncommon for a BLM inspector, a lease operator, and field employees to all have different understandings of where the point of royalty measurement is on a given lease, because Order 3 did not require operators to formally identify and obtain BLM approval for the use of a particular royalty measurement point on a given lease, unit PA, or CA. This type of discrepancy can create needless uncertainties in production, accounting, and verification, and can increase the time spent on individual inspections and audits by both operators and the BLM, which strains the BLM's limited resources and requires additional response and resources on the part of operators. This final rule corrects this problem by requiring operators to identify and obtain BLM approval for their royalty measurement points, which are called FMPs under this rule.

Similarly, with respect to commingling approvals, the BLM recognizes that the absence of uniform national guidance means that some BLM-approved commingling agreements may not provide the production data that the BLM needs to independently verify production that is attributable to the Federal or Indian leases covered by those agreements. The absence of this data limits the BLM's ability to fulfill its obligation to ensure that all production from Federal and Indian (except Osage Tribe) oil and gas leases is properly accounted for and that royalties are properly calculated. The final rule addresses these concerns by establishing uniform requirements for both existing and

future commingling approvals. With respect to existing approvals, the final rule includes provisions: (1) Specifically grandfathering existing CAAs involving downhole commingling and where production falls below certain specified thresholds; (2) Expressly exempting from compliance with the rule's commingling requirements downhole commingling in new wells in areas where the BLM has specifically recognized that downhole commingling is necessary to ensure maximum economic recovery (such as when a lower formation is necessary to produce an upper one) or when commingled production is below certain levels; and, (3) Expressly recognizing as compliant CAAs authorized by tribal law or agreement. As explained in this preamble, the provisions related to grandfathering and the additional exemptions were developed in response to comments and are consistent with the exceptions in the original proposed rule

As explained in Section III of this preamble, the requirements in this final rule respond to the Subcommittee, GAO, and OIG recommendations by updating, enhancing, clarifying, and codifying the Order 3 requirements to reflect changes in technology, industry practice, and applicable statutory requirements. The final rule also responds to comments received during the public comment period on the proposed rule.[7] In aggregate, the provisions in the final rule help ensure that the production of Federal and Indian (except Osage Tribe) oil and gas is adequately accounted for. By replacing the patchwork of guidance developed by BLM state and field offices, the final rule also provides operators with a level of consistency as to the requirements applicable to their operations on Federal and Indian (except Osage Tribe) lands nationwide.

[7] As explained in the preamble to the proposed rule, the proposal was developed based, in part, on feedback received during a series of public meetings held by the BLM on April 24 and 25, 2013. The BLM also held public meetings and accepted comments in December 2015.

The Department of the Interior (Department) plays the critical role of ensuring that the country's oil and gas assets are carefully developed and that the American people, Indian tribes and individual allottees receive fair compensation when these assets are leased and developed. A key part of this role consists of providing reasonable assurance that Federal and Indian oil and gas are accurately measured and that measurement efforts undertaken by the private companies developing these resources are held to high standards.

II. Overview of the Final Rule, Section-by-Section Analysis, and Response to Comments

A. General Overview of the Final Rule

As discussed in the background section of this preamble, the BLM's rules concerning site security and production accountability found in Order 3 have not kept pace with industry standards and practices, statutory requirements, or applicable measurement technology and practices. This final rule enhances the BLM's overall production accountability efforts by addressing these concerns and will ensure that the oil and gas produced from Federal and Indian (except Osage Tribe) leases is adequately accounted for, ultimately ensuring that all royalties due are paid. The following table provides an overview of the changes between the proposed rule and this final rule. A similar chart explaining the differences between the proposed rule and Order 3 appears in the proposed rule at 80 FR 40771.

Proposed Rule	Final Rule	Substantive Changes
43 CFR 3161.1 (e) Jurisdiction.	43 CFR 3161.1 (b) Jurisdiction.	The final rule removes a provision from the proposed rule that could have unintentionally extended the regulations in part 3160 to State or private tracts committed to a federally approved unit or CA. In its place, the BLM clarifies that the

Proposed Rule	Final Rule	Substantive Changes
		regulations under part 3170, including subparts 3173, 3174, and 3175, relating to site security, measurement, reporting of production and operations, and assessments or penalties for non-compliance with such requirements, apply to all wells and facilities on State or privately owned lands committed to a unit or CA, which includes Federal or Indian lease interests, notwithstanding any contrary provision of the unit or communization agreement.
43 CFR 3162.4-1 (d) Well records and reports.	43 CFR 3162.4-1 (d) Well records and reports.	Consistent with the proposed rule, paragraph (d) has been revised to incorporate the new records-retention period for Federal leases established by the 1996 amendments to Federal Oil and Gas Royalty Management Act (FOGRMA), 30 U.S.C. 1701 et seq. In the final rule, that provision has been restructured consistent with the changes in paragraphs (c) through (e) of § 3170.7.
None	43 CFR 3163.2 Generally	The changes being made as part of this rule are a combination of the changes proposed as part of this rulemaking effort and the proposed rule to update and replace Order 5 (80 FR 61645). These changes also reflect the modifications made by the BLM's interim final rule– *Onshore Oil and Gas Operations--Civil Penalties Inflation Adjustments* (81 FR 41860) (the "Civil Penalty Rule") –that updates the various daily penalty maximums in this section. Paragraph (a)(2) of the proposed rule is carried forward into the final. The final rule deletes existing paragraphs (g) and (j) in their entirety and redesignates existing paragraph (i) as paragraph (g).
43 CFR 3163.2(a)(l) Civil penalties.	43 CFR 3163.2 (a)(1) Civil penalties.	The final rule revises paragraph (a)(1) of the proposed rule to clarify that this section applies to "any person," as opposed to limiting it to "operating rights owner or operator." This change was proposed as part of the Order 5 rulemaking and conforms the regulation to the applicable statutory authority.
43 CFR 3163.2(b)(l) Civil penalties.	43 CFR 3163.2(b)(l) Civil penalties.	The final rule changes the references in the proposed rule to "operating rights owner, operator, purchaser, or transporter" to just "the

Proposed Rule	Final Rule	Substantive Changes
		person" consistent with the change to paragraph (a)(1) to reference "any person." Paragraph (b)(1) of the final also reflects the increase in maximum daily penalty from $500 to $1,031 made by the BLM's Civil Penalty Rule.
43 CFR 3163.2(b)(2) Civil penalties.	43 CFR 3163.2(b)(2) Civil penalties.	The final rule changes the references in the proposed rule to "operating rights owner, operator, purchaser, or transporter" to just "the person" consistent with the change to paragraph (a)(1) to reference "any person." Paragraph (b)(2) of the final rule also reflects the increase in the maximum daily penalty from $5,000 to $10,314 made by the BLM's Civil Penalty Rule.
43 CFR 3163.2(d) Civil penalties. *Proposed as part of the Order 5 rulemaking*	43 CFR 3163.2(d) Civil penalties.	Consistent with the proposed rule to update and replace Order 5, the final rule removes the regulatory cap on civil-penalty assessments. It also reflects the increase in maximum daily penalty from $500 to $1,031 made by the BLM's Civil Penalty Rule. Finally, it moves the substance of existing paragraph (k) to paragraph (d). As a result, paragraph (k) is removed.
43 CFR 3163.2(e) Civil penalties. *Proposed as part of the Order 5 rulemaking*	43 CFR 3163.2(e) Civil penalties.	Consistent with the proposed rule to update and replace Order 5, the final rule removes the regulatory cap on civil penalty assessments and reflects the increase in maximum daily penalty from $10,000 to $20,628 made by the BLM's Civil Penalty Rule.
43 CFR 3163.2(f) Civil penalties. *Proposed as part of the Order 5 rulemaking*	43 CFR 3163.2(f) Civil penalties.	Consistent with the proposed rule to update and replace Order 5, the final rule removes the regulatory cap on civil penalty assessments and reflects the increase in the maximum daily penalty from $25,000 to $51,570 made by the BLM's Civil Penalty Rule.
43 CFR 3165.3(a) Notice, State Director review and hearing on the record.	43 CFR 3165.3(a) Notice, State Director review and hearing on the record.	The final rule clarifies in paragraph (a) that any person is subject to written notice or order by the authorized officer (AO) whenever they fail to comply with any provisions of the lease, the regulations in this part, applicable orders or notices, or any other appropriate order of the AO. The proposed rule made this provision applicable only to an operating rights owner or

Proposed Rule	Final Rule	Substantive Changes
		operator, as appropriate.
43 CFR 3170.3 Definitions and acronyms.	43 CFR 3170.3 Definitions and acronyms.	New definitions have been added for the terms "averaging period," "bias," and "tampering" in response to comments received and additional internal reviews. In the final rule, the acronym Btu (British thermal unit) is moved from § 3173.1 to this section, and new acronyms - S&W (sediment and water) and LACT (lease automatic custody transfer), are included because they are used across multiple subparts in part 3170.
43 CFR 3170.6(a)(2) Variances.	43 CFR 3170.6(a)(2) Variances.	Final paragraph (a)(2) adds a sentence that encourages operators to simultaneously submit variance requests and plans or applications if those plans or applications are contingent upon the BLM approving the variance requests.
43 CFR 3170.6(a)(3) Variances.	43 CFR 3170.6(a)(3) Variances.	Final paragraph (a)(3) clarifies the process operators must use to submit their variance requests to the BLM -- via WIS, or, if the operator is a small business without access to the Internet, to the BLM office having jurisdiction over the lease, unit, or CA.
43 CFR 3170.7(c) Required recordkeeping, records retention, and records submission.	43 CFR 3170.7(c)(1) & (c)(2) Required recordkeeping, records retention, and records submission.	Paragraph (c) did not change substantively, but is split into two paragraphs. Paragraph (c)(1) states that records must be maintained for at least 7 years, and paragraph (c)(2) codifies the applicable statutory requirements for further retention beyond 7 years.
43 CFR 3170.7(d) Required recordkeeping, records retention, and records submission.	43 CFR 3170.7(d)(1) & (d)(2) Required recordkeeping, records retention, and records submission.	Paragraph (d) did not change substantively, but is split into two paragraphs. Paragraph (d)(1) states that records must be maintained for at least 6 years, and subparagraph (d)(2) codifies the applicable statutory requirements for further retention beyond 6 years.
43 CFR 3170.7(e) Required recordkeeping, records retention, and	43 CFR 3170.7(e)(1) & (e)(2) Required recordkeeping, records retention, and	The final rule moves paragraph (e)(2) of the proposed rule to (e)(1) and removes the phrase "or until the Secretary or his designee releases the record holder from the obligation to maintain the records, whichever is later."

Proposed Rule	Final Rule	Substantive Changes
records submission.	records submission.	The phrase in paragraph (e)(1) of the proposed rule – "but a judicial proceeding or demand is not commenced within 7 years after the records are generated, the record holder must retain all records regarding production from the unit or CA until the Secretary or his designee releases the record holder from the obligation to maintain the records" – is moved to its own paragraph (e)(2).
43 CFR 3170.7(g) Required recordkeeping, records retention, and records submission.	43 CFR 3170.7(g) Required recordkeeping, records retention, and records submission.	The final rule is revised to require record holders to include the FMP number or the lease, unit PA, or CA number, along with a unique equipment identifier (e.g., a unique tank identification number and meter station number), on all their records.
3170.8 Appeal procedures	3170.8(a) & (b) Appeal procedures	The language from the proposed rule is moved to a new paragraph (a) and a new paragraph (b) is added that creates a separate appeal process for decisions made by the BLM, based on a recommendation from the Production Measurement Team (PMT). Under paragraph (b), a party may file a request for discretionary review by the Assistant Secretary for Land and Minerals Management (ASLM). Paragraph (b) also provides that the ASLM may delegate this review function.
3173.1 Definitions and acronyms.	3173.1 Definitions and acronyms.	The final rule adds new definitions for the terms "commingling and allocation approval (CAA)," "free water," "permanent measurement facility," "payout period," and "royalty net present value" in response to comments on the proposed rule. The term "low volume property" is replaced with the term "economically marginal property," and the definition has also been modified. Lastly, the definition of the term "land description" is modified to be consistent with the well and facility identification requirements contained in § 3162.6 of the final rule.

Proposed Rule	Final Rule	Substantive Changes
		CAA (commingling and allocation approval) is removed from the acronym list because the acronym is introduced in the definition section; BIA (Bureau of Indian Affairs) is added to the list of acronyms.
43 CFR 3173.3 (a) Oil measurement system components—seals.	43 CFR 3173.3 (a) Oil measurement system components—seals.	The requirement in paragraph (a)(5) that flow computers be effectively sealed is removed and instead a new requirement is added in paragraph (a)(6) that a LACT or CMS must be effectively sealed. Paragraph (a)(7) in the final rule clarifies that sealing the back pressure valve refers to the "pressure adjustment" on the valve, not the valve itself.
43 CFR 3173.6 Water-Draining operations.	43 CFR 3173.6 Water-Draining operations.	The final rule removes the requirements that, when draining water from a production storage tank, operators, purchasers, or transporters document the FMP number associated with the tank, the time for when the opening and closing gauges took place, and the name of the person and company draining the tank. The final rule also clarifies that the gauging operation may be performed manually or automatically, to accommodate the use of automatic tank gauging systems. If gauging is performed manually, the final rule no longer specifies that the color cut method be used for measurement. It leaves the method for capturing the measurement up to the operator and simply requires the accuracy of the measurement to be to the nearest 1/2 inch. The final rule also clarifies that during the opening gauge operations, the total observed volume (TOV) and free-water measurements must be documented, while during closing gauge operations only the TOV must be measured, since the water will have already been drained.
43 CFR 3173.7(a) Hot oiling, clean-up, and completion	43 CFR 3173.7(a) Hot oiling, clean-up, and completion	The final rule removes the requirements that operators document the FMP number associated with the tank or group of tanks involved in a hot oiling, clean-up, or completion operation, the

Proposed Rule	Final Rule	Substantive Changes
operations.	operations.	time at which the opening and closing gauges took place, and the name of the person and company removing production from the tank. The final rule also clarifies that the gauging operation may be performed manually or automatically; the accuracy of the measurement taken in either case must be to the nearest 1/2 inch.
43 CFR 3173.7(d) Hot oiling, clean-up, and completion operations.	43 CFR 3173.7(d) Hot oiling, clean-up, and completion operations.	Paragraph (d) of the final rule clarifies that when reporting production used during hot oiling, line flushing, or completion operations, the operator's report must include "the period covering the production in question."
None	43 CFR 3173.8(b)(8) Report of theft or mishandling of production.	In the final rule, a new reporting item is added to the list of information that an operator must include in their incident report: "Whether the incident was reported to local law enforcement agencies and company security." This change was made in response to comments.
43 CFR 3173.9(a) Required recordkeeping for inventory and seal records.	43 CFR 3173.9(a) Required recordkeeping for inventory and seal records.	The final rule provides greater flexibility in how an operator determines the monthly volumes of production in their tanks. Unlike the proposed rule, where the operator was required to measure the TOV at the end of each calendar month, the final rule allows the operator to either perform the inventory within +/- 3 days of the last day of the calendar month or estimate the end of month inventory based on daily production that takes place between two measured inventories that are not more than 31 days, nor less than 20, days apart. An equation has also been provided if the operator elects to estimate the end-of-month inventory instead of performing the inventory at the end of the calendar month.
43 CFR 3173.10(b) Form 3160-5, Sundry Notices and Reports on Wells.	43 CFR 3173.10(b) Form 3160-5, Sundry Notices and Reports on Wells.	Paragraph (b) now clarifies the process operators must use to submit their Sundry Notices to the BLM Office having jurisdiction over the lease, unit, or CA– namely via the applicable BLM electronic filing system, unless the operator is a small business without access to the Internet.
43 CFR 3173.11(c)(10)(i)	43 CFR 3173.11(c)(9)(i)	In paragraph (c)(9)(i), the final rule removes the requirement to identify the equipment

Proposed Rule	Final Rule	Substantive Changes
Site facility diagram.	Site facility diagram.	manufacturer's name, rated use, and equipment serial number for each engine, motor, or major component powered by production from the lease, unit PA, or CA.
43 CFR 3173.11(c)(11) Site facility diagram.	None	Proposed paragraph (c)(11) is eliminated. The final rule does not require the diagram to include a signature block to certify accuracy and completeness of the information contained within this site facility diagram.
43 CFR 3173.11(c)(1) Site facility diagram.	43 CFR 3173.11(d)(1) Site facility diagram.	Paragraph (c)(1) is eliminated in its entirety and is replaced with paragraph (d)(1), which now requires operators to submit site facility diagrams for new facilities within 30 days after the BLM assigns an FMP to a facility. This is a change from the proposed rule, which required operators to submit diagrams for new facilities within 30 days after completing construction of the new facilities.
43 CFR 3173.11(d) Site facility diagram.	43 CFR 3173.11(d)(2) Site facility diagram.	Paragraph (d)(2), which applies to facilities that require FMP numbers and are in service before the effective date of this final rule, is changed. Under the final rule, if such a facility already has a diagram on file with the BLM that meets the minimum site-facility-diagram requirements of Order 3, the operator is not initially required to submit a new diagram meeting the requirements of this section. However, the operator must submit a new site facility diagram for the facility that complies with this section within 30 days after the facility is modified, a non-Federal facility located on a Federal lease or federally approved unit or communitized area is constructed or modified, or there is a change in operator.
43 CFR 3173.11(e) Site facility diagram.	43 CFR 3173.11(e)(1) Site facility diagram.	Paragraph (e)(1) of the final rule applies to new facilities in service after the effective date of the final rule that do not require an FMP number (e.g., a water disposal facility). This paragraph is revised to require the operator of such a facility to submit a new site facility diagram within 30 days after that facility becomes operational.
None	43 CFR 3173.11(e)(2) Site facility diagram.	A new paragraph (e)(2) is added, which applies to facilities that do not require an FMP number and are in service before the effective date of

Proposed Rule	Final Rule	Substantive Changes
		the final rule, is added to the final rule. If such a facility already has a diagram on file with the BLM that meets the minimum requirements of Order 3, the operator is not initially required to submit a diagram meeting the requirements of this section. However, the operator must submit a new site facility diagram for the facility that complies with this section within 30 days after the facility is modified, a non-Federal facility located on a Federal lease or federally approved unit or communitized area is constructed or modified, or there is a change in operator.
None	43 CFR 3173.11(f) Site facility diagram.	The BLM added a new paragraph (f), which requires operators to submit updated site facility diagrams on an ongoing basis within 30 days after that facility is modified, a non-Federal facility located on a Federal lease or federally approved unit or communitized area is constructed or modified, or there is a change in operator.
43 CFR 3173.12(d) Applying for a facility measurement point.	43 CFR 3173.12(d) Applying for a facility measurement point.	Paragraph (d) of this section applies to measurement facilities that come into service after the effective date of the final rule. This paragraph is changed to clarify that only "permanent" measurement facilities require an FMP number, and not temporary measurement equipment used during well-testing operations. New language has also been added that requires the operator to "apply" for FMP approval (as opposed to "obtaining" FMP approval, as in the proposed rule) before removing any production from that facility. Finally, this paragraph clarifies that an operator must use the lease, unit PA, or CA number for reporting production to ONRR, until the BLM assigns an FMP number. After the BLM assigns the FMP number, the operator must use the FMP number for all reporting to ONRR.
43 CFR 3173.12(e) Applying for a facility measurement point.	43 CFR 3173.12(e) Applying for a facility measurement point.	The final rule clarifies that the requirement to apply for an FMP for facilities in service before the effective date of the final rule applies only to permanent measurement facilities. The final rule also clarifies that the production levels that serve as the triggers for when an operator must

Proposed Rule	Final Rule	Substantive Changes
		apply for an FMP for an existing facility are based on the production level of any one of the leases, unit PAs, or CAs, whether or not they are part of a CAA.
43 CFR 3173.12(e)(1) to (e)(3) Applying for a facility measurement point.	43 CFR 3173.12 (e)(1) to (e)(3) Applying for a facility measurement point.	The deadlines for applying for FMP numbers have been changed from 9 months, 18 months, and 27 months in the proposed rule to 1 year, 2 years, and 3 years in the final rule for existing producing leases, unit PAs, and CAs. The deadlines are based on the production levels of any one of the leases, unit PAs, or CAs, which have also been modified from the proposed rule. Under the final rule, those facilities that produce: 1. 10,000 Mcf or more for gas or 100 bbl of oil or more – must file within 1 year of the effective date; 2. 1,500 Mcf or more but less than 10,000 Mcf of gas per month or 10 bbl or more, but less than 100 bbl of oil per month – must file within 2 years; and 3. Less than 1,500 Mcf of gas per month or less than 10 bbl of oil per month – must file within 3 years.
None	43 CFR 3173.12(e)(4) Applying for a facility measurement point.	A new paragraph (e)(4) is added to the final rule requiring the operator of a stand-alone lease, unit PA, or CA that has not produced for a year or more before the effective date of the final rule to apply for an FMP prior to the resumption of production.
43 CFR 3173.12(e)(5) Applying for a facility measurement point.	43 CFR 3173.12(e)(6) Applying for a facility measurement point.	Paragraph (e)(6) was paragraph (e)(5) in the proposed rule, but is renumbered because of the addition of a new paragraph (e)(4). The final rule also clarifies that if the operator applies for an FMP within the timeframes outlined in paragraphs (e)(1) to (e)(3), then the operator may continue using the lease, unit PA, or CA number for reporting production to ONRR, until the effective date of the BLM-assigned FMP number.
43 CFR 3173.12(f)(3) Applying for a facility measurement	43 CFR 3173.12(f)(3) Applying for a facility measurement	The final rule is revised and no longer requires operators to identify the names and the manufacturer, model, and serial number of each measurement component.

Proposed Rule	Final Rule	Substantive Changes
point.	point.	Paragraph (f)(3)(i) now requires operators to submit the following information on gas measurement equipment: • The operator/purchaser/transporter unique station number; • For primary elements, the meter tube size or serial number; and • The type of secondary device, whether it is mechanical or electronic. Paragraph (f)(3)(ii) now requires operators who measure oil tanks by tank gauge to identify the equipment by either the tank number or tank serial number (The proposed rule required operators to provide both pieces of information.) The final rule adds a new requirement that operators specify the tank size(s), in barrels or gallons. Paragraphs (f)(3)(iii) and (f)(3)(iv) of the proposed rule have been combined into a new paragraph (f)(3)(iii). This paragraph now requires operators who measure oil using LACT systems or CMSs to identify the associated oil tank number(s) or tank serial number(s), the size of the tank(s) in barrels or gallons, and whether the equipment used is a LACT system or CMS.
43 CFR 3173.12(f)(4) Applying for a facility measurement point.	None	The final rule removes the requirement in paragraph (f)(4) to identify the gas sampling method for gas measurements. Paragraph (f)(5) in the proposed rule is now renumbered to paragraph (f)(4) in the final rule and is unchanged.
None	43 CFR 3173.12(f)(5) Applying for a facility measurement point.	New paragraph (f)(5) adds to the list of information that operators must include in their FMP request.
43 CFR 3173.12(g) Applying for a facility measurement	43 CFR 3173.12(g) Applying for a facility measurement	Language is added to clarify that FMP requests – if they are submitted concurrently with requests for off-lease measurement or commingling and allocation approvals – must be submitted separately from the other requests.

Proposed Rule	Final Rule	Substantive Changes
point.	point.	
43 CFR 3173.12(h) Applying for a facility measurement point.	None	Paragraph (h) is eliminated from the final rule because it was determined to be redundant.
43 CFR 3173.13(a) and (b) Requirements for approved facility measurement points.	None	The final rule removes the requirement for operators to stamp or stencil the FMP number on a fixed plate onto various pieces of oil and gas measurement equipment and to maintain the number in a legible condition.
43 CFR 3173.13(c) Requirements for approved facility measurement points.	43 CFR 3173.13(a) Requirements for approved facility measurement points.	The final rule removes the requirement for operators to begin using the FMP number for recordkeeping on the first day of the month after the FMP number is assigned. A new provision is incorporated into paragraph (a) in the final rule that requires operators of existing facilities to begin using their FMP numbers for reporting production to the Office of Natural Resources Revenue (ONRR) on their Oil and Gas Operations Report (OGOR) for the fourth production month after the BLM assigns the FMP numbers. Operators of new facilities in service after this rule's effective date must start using their FMP numbers for production reporting on their OGORs for the first production month after the BLM assigns the FMP numbers.
43 CFR 3173.13(d)(1) and (d)(2) Requirements for approved facility measurement points.	43 CFR 3173.13(b)(1) Requirements for approved facility measurement points.	Paragraph (b)(1) in the final rule requires operators to notify the BLM via a Sundry Notice within 30 days after changing or modifying an FMP (the proposed rule gave operators 20 business days). This paragraph also describes the types of changes that require the operator to submit a Sundry Notice, e.g., changes in the metering equipment or the wells served by the FMP. Paragraph (b)(1) also clarifies that temporary modifications, such as those made for maintenance purposes, do not require the filing of a Sundry Notice. The final rule removes the requirement in proposed

Proposed Rule	Final Rule	Substantive Changes
		paragraph (d)(2) that operators provide information about the old and new meter manufacturer, serial number(s), and the owner's name.
None	43 CFR 3173.13(b)(2) Requirements for approved facility measurement points.	The final rule adds a new requirement that the operator's description of any modifications being made include details, such as the primary element, secondary element, LACT/CMS meter, tank number(s), and wells or facilities using the FMP.
43 CFR 3173.13(d)(3) Requirements for approved facility measurement points.	43 CFR 3173.13(b)(3) Requirements for approved facility measurement points.	Final paragraph (b)(3) removes the requirement that operators specify why a change was made to a piece of equipment.
43 CFR 3173.14(a) Conditions for commingling and allocation approval (surface and downhole).	43 CFR 3173.14(a) Conditions for commingling and allocation approval (surface and downhole).	Final paragraph (a) is modified so that it explicitly states that the criteria the BLM uses to approve a commingling application under this paragraph is when the proposed allocation method used for commingled measurement does not have the potential to affect the BLM's determination of the total volume or quality of the production on which royalty is owed for all of the Federal or Indian leases, unit PAs, or CAs which are proposed for commingling.
3173.14(a)(1)(i) Conditions for commingling and allocation approval (surface and downhole).	3173.14(a)(1)(i) Conditions for commingling and allocation approval (surface and downhole).	Paragraph (a)(1)(i) clarifies that commingling is permissible when it involves properties that contain 100 percent Federal mineral interests, the same fixed royalty rate, and the same revenue distribution.
3173.14(a)(1)(ii) Conditions for commingling and allocation approval (surface and downhole).	3173.14(a)(1)(ii) Conditions for commingling and allocation approval (surface and downhole).	Paragraph (a)(1)(ii) clarifies that commingling is permissible when it involves properties that are wholly owned by the same tribe and have the same fixed royalty rate
None	3173.14(a)(1)(iii) Conditions for commingling and allocation approval (surface and downhole).	A new paragraph (a)(1)(iii) is added which clarifies that commingling of Federal unit PAs or CAs is permissible even if Federal ownership is not 100 percent, so long as the properties have the same proportion of Federal ownership, royalty rate and revenue distribution.

Proposed Rule	Final Rule	Substantive Changes
None	3173.14(a)(1)(iv) Conditions for commingling and allocation approval (surface and downhole).	A new paragraph (a)(1)(iv) is added which clarifies that commingling of tribal unit PAs or CAs is permissible even if tribal ownership is not 100 percent, so long as the properties have the same proportion of tribal interest and fixed royalty rate.
3173.14(a)(2) Conditions for commingling and allocation approval (surface and downhole).	3173.14(a)(2) Conditions for commingling and allocation approval (surface and downhole).	This paragraph recognizes there are cases where multiple operators are party to a CAA and clarifies that there must be a signed agreement amongst the operators about the allocation methodology for the commingling proposal.
None	3173.14(b) Conditions for commingling and allocation approval (surface and downhole).	To complement paragraphs (a)(1)(iii) and (a)(1)(iv) to this section, paragraph (b) clarifies that the BLM may consider commingling that involves production from properties with different royalty rates or revenue distributions, or multiple mineral ownerships.
3173.14(b)(1) Conditions for commingling and allocation approval (surface and downhole).	3173.14(b)(1) Conditions for commingling and allocation approval (surface and downhole).	This paragraph is revised to reflect the BLM's switch from the term "low-volume property" to "economically marginal property." It also clarifies that if the BLM determines that a Federal or Indian lease, unit PA, or CA included in a CAA ceases to be an economically marginal property, then (b)(1) is no longer met.
3173.14(b)(2) Conditions for commingling and allocation approval (surface and downhole).	3173.14(b)(2) Conditions for commingling and allocation approval (surface and downhole).	In the proposed rule, paragraph (b)(2) allowed operators to be exempted from the BLM's commingling standards if there are overriding considerations that indicated approval of the CAA was appropriate in spite of royalty impacts. In the final rule, this provision is replaced with a new exemption if the average monthly production rate over the previous 12 months for each Federal or Indian lease, unit PA, and CA included in the CAA is less than 1,000 Mcf of gas per month or 100 bbl of oil per month. Paragraph (b)(2) from the proposed rule is now renumbered as paragraph (b)(5).
3173.14(b)(3) Conditions for commingling and allocation	3173.14(b)(3) Conditions for commingling and allocation	New paragraph (b)(3) of the final rule adds a new exemption that allows the BLM to consider approval of a commingling proposal that includes Indian leases, unit PAs, or CAs

Proposed Rule	Final Rule	Substantive Changes
approval (surface and downhole).	approval (surface and downhole).	that has been authorized under tribal law or otherwise approved by a tribe. In the proposed rule, paragraph (b)(3) required the BLM to ensure that approval of a CAA in cases where the CAA would be exempted from the standards in this rule was in the public interest. This paragraph is eliminated and incorporated into the new paragraph (b)(5).
None	3173.14(b)(4) Conditions for commingling and allocation approval (surface and downhole).	A new exemption is included as part of the final rule that allows the BLM to consider a commingling proposal if it covers the downhole commingling of production from multiple formations where the BLM has determined that the proposed commingling is an acceptable practice for the purpose of achieving maximum ultimate economic recovery and resource conservation.
43 CFR 3173.15(a)(1) and (a)(2) Applying for a commingling and allocation approval.	43 CFR 3173.15(a) Applying for a commingling and allocation approval.	Paragraph (a) of the final rule eliminates the numbering for paragraph (a)(1) in the proposed rule, and clarifies that if off-lease measurement is a feature of the commingling proposal, then a separate Sundry Notice requesting approval for off-lease measurement is not necessary as long as the off-lease measurement request is included as part of the commingling application and the information required in § 3173.23(b) through (e) and, where applicable, § 3173.23(f) through (i) is included in the commingling application.
3173.15(a)(2) Applying for a commingling and allocation approval.	43 CFR 3173.15(b)	Paragraph (a)(2) from the proposed rule is renumbered to a new paragraph (b) and clarifies that submission of a completed Sundry Notice for approval of off-lease measurement is required if any of the proposed FMPs are outside the boundaries of any lease, unit PA, or CA whose production would be commingled. This paragraph clarifies that this requirement does not apply if the circumstances under paragraph (a) of this section are applicable.
43 CFR 3173.15(b) Applying for a commingling and allocation	43 CFR 3173.15(c) Applying for a commingling and allocation	In addition to requiring operators to provide their proposed allocation agreement, final paragraph (c) is revised to require operators to provide an allocation methodology, along with an example of how the methodology is to be

Proposed Rule	Final Rule	Substantive Changes
approval.	approval.	applied.
None	43 CFR 3173.15(d)	Requires the operator to include a list of all Federal or Indian lease, unit PA, or CA numbers in the proposed CAA, specifying the type of production (i.e., oil, gas, or both) for which commingling is requested.
43 CFR 3173.15(d) Applying for a commingling and allocation approval.	43 CFR 3173.15(e) Applying for a commingling and allocation approval.	Final paragraph (e) continues to require operators to provide maps with their commingling and allocation requests, but the information requirements for the maps are changed. Please note that in the final rule, paragraphs (d)(2) and (d)(3) have been consolidated and renumbered as paragraphs (e)(1) and (e)(2) in the final rule. The final rule also reduces the amount of information that must be submitted with a commingling application relative to the proposed rule.[8]
43 CFR 3173.15(e) Applying for a commingling and allocation approval.	None	Proposed paragraph (e), which required submission a site facility diagram showing any changes to existing diagrams if changes were being proposed to an existing facility, is eliminated from the final rule.
43 CFR 3173.15(f) Applying for a commingling and allocation approval.	None	Proposed paragraph (f), which required submission of a schematic or engineering drawing for all new proposed facilities, is eliminated from the final rule.
43 CFR 3173.15(g) Applying for a commingling and allocation approval.	43 CFR 3173.15(f) Applying for a commingling and allocation approval.	Paragraph (f) of the final rule (paragraph (g) of the proposed rule) is revised to clarify that operators must submit a surface use plan of operations if new surface disturbance is proposed for the FMP and its associated facilities, if those facilities are located on BLM-managed land within the boundaries of the

[8] Specifically, the final rule no longer requires the commingling application to include the following items: (i) The land description of the FMP that will be used to measure the commingled production; (ii) Production facilities and flow lines proposed to be installed to the extent known; and (iii) A map or diagram showing all of the infrastructure-related facilities that are part of the commingling proposal. The final rule only requires identification of existing or planned facilities, all wellheads, and piping that will be included in the CAA, as well as existing or proposed FMPs to be installed (if known).

Proposed Rule	Final Rule	Substantive Changes
		lease, units, or communitized areas whose production will be commingled.
43 CFR 3173.15(h) Applying for a commingling and allocation approval.	43 CFR 3173.15(g) Applying for a commingling and allocation approval.	Final paragraph (g) clarifies that the operator must submit a right-of-way grant application (Standard Form 299) if the proposed FMP is on a pipeline or is a meter or storage tank that entails new surface disturbance located on BLM-managed land outside any of the leases, units, or communitized areas whose production would be commingled.
43 CFR 3173.15(i) Applying for a commingling and allocation approval.	43 CFR 3173.15(h) Applying for a commingling and allocation approval.	Final paragraph (h) is essentially the same as proposed paragraph (i) but is renumbered.
None	43 CFR 3173.15(i) Applying for a commingling and allocation approval.	A new final paragraph (i) has been added to clarify that the operator must submit a right-of-way grant application to the appropriate BIA office if any of the proposed surface facilities are on Indian land outside the lease, unit, or communitized area from which the production would be commingled.
None	43 CFR 3173.15(j)	Requires the operator to include documentation demonstrating that each of the leases, unit PAs, or CAs proposed for inclusion in the CAA is producing or capable of production in paying quantities.
43 CFR 3173.15(k) Applying for a commingling and allocation approval.	43 CFR 3173.15(k) Applying for a commingling and allocation approval.	Final paragraph (k) clarifies that gas analysis and oil gravity data is not needed if the CAA falls under § 3173.14(a).
43 CFR 3173.16(a) Existing commingling and allocation approvals.	43 CFR 3173.16(a) Existing commingling and allocation approvals.	This section is extensively rewritten from the proposed rule based on comments received. Final paragraph (a) includes new provisions that grandfather the following types of existing commingling operations and their associated off-lease measurement approvals, where applicable, that are in effect prior to the effective date of the final rule: • Existing CAAs involving downhole commingling that includes Federal or Indian

Proposed Rule	Final Rule	Substantive Changes
		leases, unit PAs, or CAs; or • Existing CAAs for surface commingling whose average production rate over the previous 12 months for each Federal or Indian lease, unit PA, and CA included in the CAA is less than 1,000 Mcf of gas per month or 100 bbl of oil per month.
43 CFR 3173.16(b) Existing commingling and allocation approvals.	43 CFR 3173.16(b) Existing commingling and allocation approvals.	A new provision has been added to paragraph (b), which clarifies that if the grandfathering conditions in paragraph (a) of this section are not met, then the existing CAA must meet the minimum standards and requirements for a CAA under § 3173.14 of the final rule. This section also clarifies that the AO will notify the operator in writing of any inconsistencies or deficiencies with an existing CAA. When the AO is satisfied that the operator has corrected any inconsistencies or deficiencies, the AO will terminate the existing CAA and grant a new CAA based on the operator's corrections.
43 CFR 3173.16(c) Existing commingling and allocation approvals.	43 CFR 3173.16(b)(2) Existing commingling and allocation approvals.	Paragraph (b)(2) of the final rule clarifies that the AO may terminate an existing CAA and grant a new CAA with new or amended COAs to make the approval consistent with the requirements for CAAs under § 3173.14 of the final rule. Under the proposed rule the AO could simply impose new or amended COAs to an existing commingling approval.
43 CFR 3173.16(e) Existing commingling and allocation approvals.	43 CFR 3173.16(c) Existing commingling and allocation approvals.	Proposed paragraph (e) is now paragraph (c) and clarifies that any new allocation percentages resulting from the new CAA will only apply from the effective date of the CAA forward.
43 CFR 3173.18(a) Modification of a commingling and allocation approval.	43 CFR 3173.18(a) Modification of a commingling and allocation approval.	Paragraph (a) is changed to require operators to modify a CAA under certain circumstances. The final rule no longer includes "a change in operator" in the list of circumstances that warrant a CAA modification.
43 CFR 3173.18(b)	43 CFR 3173.18(b)	Final paragraph (b)(2) includes a new requirement to describe not only a new

Proposed Rule	Final Rule	Substantive Changes
Modification of a commingling and allocation approval.	Modification of a commingling and allocation approval.	allocation methodology for oil and gas production, if appropriate, but also an allocation methodology for produced water and an example of how the methodology is applied.
None	43 CFR 3173.18(c) Modification of a commingling and allocation approval.	A new paragraph (c) is added that states that a change in operator does not trigger the need to modify a CAA.
43 CFR 3173.20(a) Terminating a commingling and allocation approval.	43 CFR 3173.20(c) Terminating a commingling and allocation approval.	The final rule redesignates and modifies proposed paragraph (a), which allows any operator who is a party to a CAA to unilaterally terminate the CAA. New paragraph (c) in the final rule clarifies that it allows an operator to terminate the CAA through the submission of a Sundry Notice to the BLM. It also clarifies that the termination by one operator does not terminate the CAA for all other operators, so long as the requirements of this part with respect to CAAs are still met as to the remaining operators and they submit a Sundry Notice requesting a new CAA as required by § 3173.20(e).
43 CFR 3173.20(d) Terminating a commingling and allocation approval.	43 CFR 3173.20(d) Terminating a commingling and allocation approval.	Paragraph (d) of the final rule clarifies that the BLM will notify all parties to a CAA the effective date of the termination and the inconsistencies or deficiencies with their CAA that serve as the reason(s) for termination. The final rule also gives operators the opportunity to correct the inconsistencies or deficiencies, or provide additional information, within 20 business days after receipt of the BLM's notice. Otherwise, the CAA will be terminated.
43 CFR 3173.20(e) Terminating a commingling and allocation approval.	43 CFR 3173.20(e) Terminating a commingling and allocation approval.	Paragraph (e) of the final rule clarifies that if a CAA is terminated, each lease, unit PA, or CA that was included in the CAA may require a new FMP number, or a new CAA may need to be applied for. In such cases, operators will have 30 days to apply for a new FMP number or CAA. Unlike the proposed rule -- where operators would have been required to revert

Proposed Rule	Final Rule	Substantive Changes
		back to separate measurement for each lease, unit PA, or CA -- the final rule allows the operator to use the existing FMP number for production reporting until a new FMP number is assigned or a new CAA is approved.
43 CFR 3173.21(b) Combining production downhole in certain circumstances.	43 CFR 3173.21(b) Combining production downhole in certain circumstances.	Paragraph (b) makes clear that combining production downhole from different geologic formations on the same lease in a single well is not considered to be commingling for production accounting purposes. This applies even in cases where the respective geologic formations have different ownership. The proposed rule made this distinction, which no longer applies in the final rule. The final rule also clarifies that such activities are not subject to the commingling standards and requirements contained in §§ 3173.14 through 3173.20.
43 CFR 3173.22(c) Requirements for off-lease measurement.	43 CFR 3173.22(c) Requirements for off-lease measurement.	Changes to this paragraph clarify that topographic and environmental issues that make on-lease measurement physically impractical are factors to be considered when deciding if off-lease measurement is in the public interest.
43 CFR 3173.23(a) Applying for off-lease Measurement.	43 CFR 3173.23(a) Applying for off-lease Measurement.	The second sentence of proposed paragraph (a) is removed because § 3173.15(a) states that if off-lease measurement is a feature of the CAA proposal, then a separate Sundry Notice is not necessary as long as the information required under § 3173.23(b) through (e) and, where applicable, § 3173.23(f) through (i), is included as part of the request for approval of a CAA.
43 CFR 3173.23(c)(2) Applying for off-lease Measurement.	43 CFR 3173.23(c)(2) Applying for off-lease Measurement.	The final rule in this paragraph no longer requires location identification by land description, but does include a new requirement to identify existing or proposed (to the extent known) FMPs.
43 CFR 3173.23(d) Applying for off-lease Measurement.	None	Paragraph (d) of the proposed rule requiring operators to submit a schematic or engineering drawing for all new proposed facilities is deleted.
43 CFR 3173.23(e) Applying for off-	None	Paragraph (e) of the proposed rule, which required operators to submit as part of their off-lease measurement application, site facility

Proposed Rule	Final Rule	Substantive Changes
lease Measurement.		diagrams clearly showing any proposed change to current site facility diagrams for existing facilities is deleted.
43 CFR 3173.23(f) Applying for off-lease Measurement.	43 CFR 3173.23(e) Applying for off-lease Measurement.	In the event there is a change in the ownership of the non-Federal surface or of the measurement facilities, the final rule includes a new 30-day deadline for when an operator must submit written concurrence from the new owner that it will give the BLM unrestricted access to the off-lease measurement facility and the surface on which it is located to inspect the FMP and any associated equipment.
43 CFR 3173.23(g) Applying for off-lease Measurement.	43 CFR 3173.23(f) Applying for off-lease Measurement.	Final paragraph (f) clarifies that if the proposed off-lease FMP is on a pipeline or is a meter or storage tank, then a right-of-way grant application using Standard Form 299 must be submitted. This paragraph also clarifies that this requirement applies only when new surface disturbance is proposed for the FMP and its associated facilities are located on BLM-managed land.
43 CFR 3173.23(h) Applying for off-lease Measurement.	43 CFR 3173.23(g) Applying for off-lease Measurement.	Final paragraph (g) (re-lettered from paragraph (h)) clarifies that if any of the proposed surface facilities are on Indian land outside the lease, unit, or communitized area, then a right-of-way grant application filed under 25 CFR part 169 must be filed with the appropriate BIA office.
None	43 CFR 3173.23(h) Applying for off-lease Measurement.	The final rule adds a new paragraph (h) that requires written approval from the appropriate surface-management agency if new surface disturbance is proposed for the FMP and its associated facilities are located on Federal land managed by an agency other than the BLM.
3173.25(b) Existing approved off-lease measurement.	3173.25(b) Existing approved off-lease measurement.	Paragraph (b) of the final rule has been revised to provide an opportunity for operators to request additional time to correct any inconsistencies or deficiencies that the AO identifies. This paragraph also clarifies that the extension request must explain the factors preventing the operator from timely compliance.
3173.25(c) Existing	3173.25(c) Existing approved	Paragraph (c) of the final rule clarifies that if new or amended conditions of approval (COAs)

Proposed Rule	Final Rule	Substantive Changes
approved off-lease measurement.	off-lease measurement.	are necessary to make an existing off-lease measurement approval consistent with the final rule's standards, then the BLM could address that situation by terminating the existing approval and issuing a new off-lease measurement approval with new or amended COAs.
None	43 CFR 3173.25(e) Existing approved off-lease measurement.	A new paragraph (e) is added to the final rule, clarifying that if the existing off-lease measurement approval under this section is consistent with the requirements under § 3173.22, then that existing off-lease measurement is grandfathered and will be part of its FMP approval.
43 CFR 3173.25(e) Existing approved off-lease measurement.	43 CFR 3173.25(f) Existing approved off-lease measurement.	Proposed paragraph (e) is re-lettered to paragraph (f).
43 CFR 3173.27(a) Termination of off-lease measurement approval.	43 CFR 3173.27(c) Termination of off-lease measurement approval.	Proposed paragraph (a) is deleted from the final rule and the provision in that paragraph allowing an operator to terminate off-lease measurement is moved to paragraph (c).
43 CFR 3173.27(b) Termination of off-lease measurement approval.	43 CFR 3173.27(a) Termination of off-lease measurement approval.	Paragraphs re-lettered. No change.
43 CFR 3173.27(c) Termination of off-lease measurement approval.	43 CFR 3173.27(b) Termination of off-lease measurement approval.	Final paragraph (b) is changed to say the BLM will notify the operator in writing of any inconsistencies or deficiencies with its off-lease measurement approval that serve as the reason(s) for termination. The final rule is also changed to give the operator 20 business days after receipt of the notification to correct the inconsistencies or deficiencies that the BLM identifies, or provide additional information that the AO requests, or the off lease measurement approval terminates. The operator may request an extension of the

Proposed Rule	Final Rule	Substantive Changes
		20-business-day timeframe.
43 CFR 3173.27(d) Termination of off-lease measurement approval.	43 CFR 3173.27(d) Termination of off-lease measurement approval.	Final paragraph (d) explains that if an off lease measurement approval is terminated, each lease, unit PA, or CA that was in the approval may require a new FMP number(s) or a new off lease measurement approval. Operators will have 30 days to apply for a new FMP number or off lease measurement approval. The final rule allows operators to use the existing FMP number for production reporting until a new FMP number is assigned or a new off lease measurement approval is approved.
43 CFR 3173.29 Immediate assessments.	43 CFR 3173.29 Immediate assessments.	The final rule exempts purchasers and transporters from the immediate assessments that will be imposed for certain instances of non-compliance. In addition, the final rule modifies the description of violations number 7 through 11. • For violation number 7, the final rule clarifies that the applicable regulation is § 3170.7, not § 3173.9(a)(1) and (a)(2). • For violation 8, the final rule clarifies that an immediate assessment could result if operators fail to "apply for" the required FMP approval. The proposed rule required operators to "obtain" FMP approval. • For violations 9, 10, and 11, the final rule clarifies that an immediate assessment could result if production is removed from a facility in operation after the effective of the final rule prior to receiving BLM approval for off-lease measurement or commingling. For an existing facility in service on or before the effective date of the final rule, an immediate assessment could result if production is removed from a facility that does not already have an existing BLM approval for off-lease measurement or commingling, if applicable.

B. Section-by-Section Analysis and Response to Comments on Specific Provisions

This final rule is codified primarily in a new 43 CFR subpart 3173 within a new part 3170. The BLM is also issuing final rules that update and replace Order 4 (oil measurement) and Order 5 (gas measurement). Those final rules are codified at new 43 CFR subparts 3174 and 3175, respectively, within the new part 3170. Subpart 3170 of this final rule contains definitions of certain terms and provisions that are common to all three rules (and to any other provisions within part 3170), i.e., provisions prohibiting by-pass of or tampering with meters; procedures for obtaining variances from the requirements of a particular rule; requirements for recordkeeping, records retention, and submission; and administrative appeal procedures.

In addition, this final rule makes changes to various provisions in 43 CFR part 3160 43 CFR 3161.1, 3162.3-2, 3162.4-1, 3162.6, 3162.7-1, 3163.2, and 3165.3. Public comments on changes to the provisions in part 3160 are discussed in connection with the new subparts 3170 or 3173 provisions to which the particular comment relates. Other comments on changes to provisions in part 3160 are discussed at the end of this Section-by-Section analysis.

Subpart 3170 and Related Provisions

Section 3170.1 Authority

Section 3170.1 of the final rule identifies the various grants of rulemaking authority in the Federal and Indian mineral leasing statutes and related statutes that give the Secretary authority to promulgate this rule. As explained in that section, the Department is authorized to lease Federal and Indian (except Osage Tribe) oil and gas under various mineral leasing statutes, including the Mineral Leasing Act, 30 U.S.C. 181 et seq.; the Mineral Leasing Act for Acquired Lands, 30 U.S.C. 351 et seq.; the Federal Oil and Gas

Royalty Management Act (FOGRMA), 30 U.S.C. 1701 et seq.; the Indian Mineral Leasing Act, 25 U.S.C. 396a et seq.; the Act of March 3, 1909, 25 U.S.C. 396; the Indian Mineral Development Act, 25 U.S.C. 2101 et seq.; and the Federal Land Policy and Management Act (FLPMA), 43 U.S.C. 1701 et seq.

Each of these statutes expressly authorizes the Secretary of the Interior to promulgate necessary and appropriate rules and regulations governing those leases. See e.g., 30 U.S.C. 189; 30 U.S.C. 359; 30 U.S.C. 1751; 25 U.S.C. 396d; 25 U.S.C. 396; 25 U.S.C. 2107; and 43 U.S.C 1740. The Secretary has delegated this authority to the Bureau of Land Management (BLM). Specifically, under Secretarial Order Number 3087, dated December 3, 1982, as amended on February 7, 1983 (48 FR 8983), and the Departmental Manual (235 DM 1.1), the Secretary has delegated regulatory authority over onshore oil and gas development on Federal and Indian (except Osage Tribe) lands to the BLM. For Indian leases, the delegation of authority to the BLM is reflected in 25 CFR parts 211, 212, 213, 225, and 227. In addition, as authorized by 43 U.S.C. 1731(a), the Secretary has delegated to the BLM regulatory responsibility for oil and gas operations in Indian lands. 235 DM 1.1.K.

These statutes and regulations form the basis of and provide the authority for the issuance of this final rule. For example, § 101(a) of FOGRMA directs the Secretary to "establish a comprehensive inspection, collection and fiscal and production accounting and auditing system to provide the capability to accurately determine oil and gas royalties, interest, fines, penalties, fees, deposits, and other payments owed, and to collect and account for such amounts in a timely manner." Ensuring that oil and gas produced from Federal and Indian leases is accurately measured and properly accounted for is a

critical component of any system to ensure that all royalties due are paid. Under § 101(a) of FOGRMA, the Secretary is authorized to promulgate "such rules and regulations as [s]he deems reasonably necessary to carry out." the purposes of the act. The FOGRMA mandate complements the policy articulated in FLPMA that the United States receive fair compensation for the use of public lands and resources. See 43 U.S.C. 1701(a)(9). This rule, by improving BLM requirements governing site security and related measures, helps ensure that all royalties due are paid, and thus that the United States receives fair compensation for the use of public minerals.

The BLM did not receive any public comments related to this provision and only made minor changes for clarity between the proposed and final versions.

Section 3170.2 Scope

Section 3170.2 (a) explains that the regulations in part 3170 apply to all onshore Federal and Indian (except Osage Tribe) oil and gas leases. Paragraph (b) explains that part 3170 also applies to agreements for oil and gas development under the Indian Mineral Development Act, unless the relevant provisions of the rule are inconsistent with the specific terms of such agreement. Paragraph (c) explains that a Tribal Energy Resource Agreement entered into with the Secretary is subject to part 3170, unless specifically excluded in such lease, other business agreement or Tribal Energy Resource Agreement. Paragraph (d) explains that State or private tracts committed to a federally approved unit or CA as defined by or established under 43 CFR subpart 3105 or 43 CFR part 3180 are also subject to the requirements of part 3170. Finally, paragraph (e) states that all FMPs measuring production from any of the aforementioned leases or agreements are subject to the requirements of part 3170.

The BLM received several comments expressing concern with proposed paragraph (d), which applies the part 3170 regulations to State or private tracts committed to a federally approved unit or CA as defined by or established under 43 CFR subpart 3105 or 43 CFR part 3180. The same language also appeared in a new paragraph (e) that was proposed to be added to § 3161.1 Jurisdiction. Comments received on both sections are discussed here.

Many commenters thought that the new paragraph (e) language proposed for § 3161.1 would extend the BLM's jurisdiction over oil and gas to activities that are not covered by this rule. Specifically, commenters were concerned that adding the proposed language to § 3161.1 and also to proposed § 3170.2 would expand the BLM's authority over the processing and approval of Applications for Permits to Drill (APDs) within State and private tracts committed to a BLM-approved Federal or Indian unit or CA. Commenters said that such an expansion of authority would force operators to obtain Federal drilling permits for drilling on State and private tracts. From the commenters' perspective, this perceived expansion in jurisdiction would fundamentally alter the way in which operators plan for development.

The BLM disagrees with this interpretation of the new language and never intended for this rule to extend the BLM's permitting authority over State and private drilling approvals. However, to avoid confusion, the BLM in this final rule added a new paragraph (b) to its § 3161.1 revisions, which clarifies that it is the regulations in parts 3160 and 3170 relating to site security, measurement, reporting of production and operations, and assessments or penalties for non-compliance with such requirements (i.e., those found in subparts 3173, 3174, and 3175) that are applicable to all wells and

facilities on State or privately owned lands committed to a unit or CA where the unit or CA affects Federal or Indian interests. Proposed §3170.2(d) has not been changed because it is appropriate for this rule to state that the regulations under part 3170, which includes subparts 3173, 3174, and 3175, do in fact apply to State or private tracts committed to a federally approved unit or CA as defined by or established under 43 CFR subpart 3105 or 43 CFR part 3180. This is consistent with the BLM's past application of its regulations, including its Onshore Orders, under existing 43 CFR § 3161.1(b).

Section 3170.3 Definitions and acronyms

This section defines terms and acronyms used across all of the various subparts of part 3170.

The BLM did not receive any comments on the majority of the definitions that appeared in the proposed rule and that are now in the final rule. Those definitions for which we received no comments were carried forward in this final rule and are not discussed further here. As explained in the proposed rule, a number of the definitions in § 3170.3 of the proposed rule were the same definitions that were found in Order 3, with only minor revisions to either simplify or clarify those definitions.

The following discussion first describes the new definitions that have been added to § 3170.3 in the final rule, and then summarizes and responds to comments that the BLM received on a handful of the proposed definitions. With respect to the former, based on comments received and its own internal reviews, the BLM added three new definitions to § 3170.3: "Averaging period," "bias," and "tampering." As explained below some of these definitions were originally proposed as part of the proposed rules to replace Order 4 (80 FR 58952) and Order 5 (80 CFR 61646). The BLM determined that it was

appropriate to move those definitions from those rulemakings to § 3170.3, because the terms are used in multiple subparts, and should therefore be defined once in a section that covers the entirety of part 3170. Other definitions were added in response to public comments.

The final rule defines "averaging period" to mean the previous 12 months or the life of the meter, whichever is shorter. For FMPs that measure production from a newly drilled well, the averaging period excludes production from that well that occurred in or before the first full month after production began. For example, if an oil FMP or a gas FMP were installed to measure the production from a new well that first produced on April 10, the averaging period for this FMP would not include the production that occurred in April and May of that year. The BLM added this definition to § 3170.3 because the term is used multiple times in subparts 3174 (oil measurement) and 3175 (gas measurement), relating to the applicability of uncertainty threshold requirements. The BLM determined it was important to provide a single definition of the averaging period in order to provide for consistent application of the BLM's oil and gas measurement rules.

The final rule adds a definition for the term "bias" to § 3170.3 because that term is used in both subparts 3174 and 3175. "Bias" is defined to mean a "shift in the mean value of a set of measurements away from the true value of what is being measured." This definition was originally proposed as part of the rule to replace Order 5 in § 3175.10. The definition added to part 3170.3 is identical to the definition in proposed § 3175.10, because the BLM did not receive any comments on that definition in the context of the Order 5 rulemaking.

In response to recommendations from many commenters, the BLM added a definition of the term "tampering" to § 3170.3. The proposed and final rules prohibit operators from tampering with measurement equipment, components, or processes and appropriate valves. While the meaning of tampering is commonly understood, the BLM agrees with commenters that the term should be defined to ensure there is a common understanding of what is meant by tampering for purposes of this rule. Section 3170.3 defines tampering to include "any deliberate adjustment or alteration to a meter or measurement device, appropriate valve, or measurement process that could introduce bias into the measurement or affect the BLM's ability to independently verify volumes or qualities reported." The BLM modified the definition of "commingling" in the final rule to clarify that combining production from multiple wells within a single lease, unit PA, or CA, or the downhole combining of production from different zones or formations that are part of the same lease, unit PA, or CA, is not considered "commingling" for the purpose of the final rule. Many commenters expressed concern that the definition for commingling in the proposed rule would have required an operator to obtain approval to combine production from multiple properties within a CA or unit PA prior to measurement, particularly when the CA or unit PA contains leases with multiple owners (i.e., Federal, Indian, State, or private). Commenters said the proposed definition negates one of the primary benefits of establishing a CA or unit PA, which is the operation of the CA or unit PA as one entity and the sharing of revenues from that CA or unit PA on a fixed allocation schedule, typically based on ownership percentage within the CA or unit PA.

The conclusions reached by these commenters were incorrect. Neither the proposed rule nor the final rule defined "commingling" to include the combining of production

from multiple properties within a CA or unit PA prior to measurement. However, in response to these comments, the BLM revised the definition of commingling to help clarify the situations that are and are not considered commingling, and to emphasize that the combining of production from multiple properties within a CA or unit PA prior to royalty measurement is not commingling.

One commenter said the proposed commingling definition could deter operators from drilling horizontal wells through several sections that contain different mineral estates and reduce the production and utilization of the State's oil and gas resources. The BLM agrees with this comment with respect to the limited situations in which there is no unit agreement or CA in place for those sections. Downhole commingling when there is multiple ownership and no unit or CA in place would adversely affect the uncertainty, bias, and verifiability of the measurement of the volumes produced from each property, and the BLM would deny such a request unless it qualified under § 3173.14(b) of the final rule. If there was a unit or CA in place, however, the BLM would not consider the combining of production between several sections within the unit or CA to be commingling and no approval would be required. The BLM did not make any changes to the rule based on this comment.

The definition of an FMP in this final rule is carried forward from the proposed rule, which defined an FMP to be a "BLM-approved point where oil or gas produced from a Federal or Indian lease, unit PA, or CA is measured and the measurement affects the calculation of the volume or quality of production on which royalty is owed." As explained in more detail below in the discussion of comments for § 3173.12, the final rule sets forth a process for an operator of a new or existing facility to apply for approval

of an FMP and issuance of an FMP number in proposed § 3173.12. Because § 3173.12 of the final rule requires operators of existing facilities to apply for an FMP in stages over a 36-month period, it will require 3 years from the effective date of the final rule for the BLM to receive, evaluate, and act on an FMP application for existing facilities. Therefore, for purposes of compliance with other provisions of this final rule, during this interim period, the definition of an FMP makes clear, as in the proposed rule, that an FMP "also includes a meter or measurement facility used in the determination of the volume or quality of royalty-bearing oil or gas produced before BLM approval of an FMP under § 3173.12 of this part."

The BLM received many comments on the proposed definition of an FMP. A couple of commenters pointed out that there are differences between the BLM's proposed definition and the ONRR's definition at 30 CFR 1206.171. Commenters said these differences could cause confusion for industry, the BLM, and ONRR, and recommended that a single definition be established for both agencies. These commenters did not provide specific details or any examples of the confusion that could arise as a result of these definitional differences. The BLM compared both definitions and agrees that there are differences, but disagrees with commenters that these differences will cause confusion. The intent of both definitions is the same. Both agencies want to ensure that the FMP is the point at which measurement determines the royalty that is owed to the Federal Government or the Indian mineral owners. In general, the ONRR definition applies to offshore oil and gas operations, whereas the BLM definition applies only to onshore operations. So, while the two agencies' FMP definitions are not exactly the same, they capture a similar concept (i.e., the specific measurement point where operators

determine the royalty due the Federal Government or Indian mineral owners). These comments did not result in a change to the final rule.

It should be noted that in 2013, the GAO specifically noted in report GAO-10-313 that Interior's onshore and offshore policies for tracking and approving where and how oil and gas are measured are inconsistent. The Bureau of Safety and Environmental Enforcement (BSEE) already assigns FMP numbers for offshore oil and gas leases, which the operator, transporter, or purchaser must then use when reporting production results to ONRR. Based on that practice, the GAO recommended that the BLM clearly identify points of measurement where oil and gas royalties due to the Federal Government are determined and reported. By including the definition of FMP in the final rule, the BLM is able to both address the GAO's concerns and bring onshore reporting in-line with the approach used offshore.

The BLM received additional comments pertaining to the FMP definition. One recommended that the definition be changed to allow operators to use gas processing plant tailgate meters located off the lease, unit, or CA as FMPs as a general matter, or to allow those meters to be used as FMPs under a variance. Another commenter asked whether an FMP is the same as a Central Delivery Point or Point of Royalty Measurement as defined in Washington Office Instruction Memorandum (IM) 2013-152, a BLM policy document created in 2013 regarding commingling approvals.

The BLM did not change the definition of an FMP to include tailgate meters because, under the Mineral Leasing Act (MLA) and FOGRMA, the Secretary's authority to regulate onshore oil and gas operations applies to lessees/operators and, during certain activities, to purchasers and transporters. While the owners of off-lease/unit/CA gas

processing plants may sometimes fall into these categories of regulated entities, they will not always, and while the BLM may consider requests for off-lease measurement it is not required to approve such request. Therefore, the BLM chose not to include off-lease/unit/CA tailgate meters in the definition of an FMP in order to avoid default applications of this rule that might be inconsistent with BLM's statutory authority or the requirements of this final rule related to off-lease measurement at §§ 3173.23 through 3173.28. With respect to whether the definition of an FMP is the same as the Central Delivery Point or Point of Royalty Measurement as defined in IM 2013-152, the BLM can confirm that they are the same.

The definition of "off-lease measurement," in both the proposed and final rules, means measurement at an FMP that is not located on the lease, unit, or communitized area from which the production came. The BLM received several comments requesting that the definition be expanded to exempt from the proposed rule's off-lease measurement approval requirement cases in which a horizontally or directionally drilled well is completed through a Federal or Indian lease, unit, or communitized area, but conducts measurement operations off-lease at the wellhead. The commenters said that, in many instances, wells are being drilled from a surface location that is sited off-lease due to environmental conditions, such as rugged terrain or sensitive wildlife habitat. The BLM did not change the definition of off-lease measurement in response to this comment because § 3173.28(a) of the proposed and final rules already addresses this situation. Under § 3173.28(a), measurement at an approved FMP is not considered off-lease measurement when the FMP is located on the well pad of a directionally or horizontally drilled well that produces oil and gas from a lease, unit, or CA on which the well pad is

not located. Therefore, approval for off-lease measurement is not required under those circumstances, so long as measurement operations occur on the well pad of the directionally or horizontally drilled well.

The final rule makes minor changes to the list of acronyms that appear in proposed § 3170.3 based on the acronyms used in part 3170. The BLM did not receive any comments on this list. The acronym Btu (British thermal unit) has been relocated from § 3173.1 to § 3170.3 because this acronym is used in both subparts 3173 and 3175. The acronym S&W (sediment and water) is new to section. The BLM decided to include it in § 3170.3 because the acronym is used in both subparts 3173 and. Although it is a commonly understood acronym in the oil and gas industry, the BLM believes it is appropriate to include the acronym here for clarity and to help inform the general public. The BLM also added the acronym LACT (lease automatic custody transfer) because it is used in both subparts 3173 and 3174.

Section 3170.4 Prohibitions against by-pass and tampering

The BLM did not make any changes to the requirements of this section between the proposed and final versions. Section 3170.4 strengthens the prohibition against meter by-passes contained within section III.D of Order 3 by adding language that prohibits tampering with any measurement device, component of a measurement device, or measurement process. As explained in § 3170.3, tampering includes any deliberate adjustment or alteration to the meter or measurement device or measurement process that could introduce bias into the measurement or affect the BLM's ability to independently verify volumes or qualities reported. Examples of tampering include deliberately installing an orifice plate in a gas meter with the bevel upstream, adjusting a transducer to

read higher or lower than a certified test device, entering incorrect information into the configuration log of an electronic gas measurement system, submitting derived integral values on a volume statement in lieu of raw data, or making analogous adjustments or alterations to an oil measurement system.

The BLM received many comments on this section of the proposed rule, most of which suggested that the BLM clarify that inadvertent human error or force majeure events should not be considered "tampering" for purposes of this section. For example, one commenter said meter reports may use derived values due to tap freezes or data loss. The commenter believes that these situations should not be considered "tampering." The commenter said the language in the proposed rule would not allow for such cases, and should be modified. The BLM agrees with this comment and in the final rule has provided a definition for the term "tampering," as previously discussed, that clearly states that the act of tampering must be deliberate on the part of the operator. By requiring acts to be deliberate, consistent with the commenter's suggestion, the BLM is able to take into consideration whether a particular act is due to human error or is outside of the operator's control.

The BLM did not amend the definition of tampering in response to the comment about the use of derived values rather than raw data in a meter report, such as when a tap freezes or other malfunctions are experienced. These circumstances can occur in the context of either oil or gas measurement, and they are addressed in specific provisions of subparts 3174 and 3175 (the new rules replacing Orders 4 and 5) that establish procedures that an operator must follow to notify the BLM of the malfunctioning equipment, document how derived values were determined, and indicate on the quantity

transaction record that derived values, rather than raw data, were used to determine volumes. As a result, the BLM did not amend the definition of tampering in response to comments about derived values.

Section 3170.5 Industry standards incorporated by reference

Section 3170.5 is reserved for potential future incorporation by reference of standards that apply to more than one of the subparts of part 3170.

Section 3170.6 Variances

Section 3170.6 of the final rule clarifies and makes more uniform the BLM's existing process and regulations for granting variances from the minimum standards contained in part 3170.

Paragraph (a)(1) lists all the information that a party seeking a variance from the requirements of part 3170 must include when filing a request, including: Identification of the specific requirement from which a variance is sought, and the length of time the variance is requested; an explanation of the need for the variance; a detailed explanation of the proposed alternative means of compliance; and a showing that the proposed alternative meets or exceed the objectives of the applicable requirement. Paragraph (a)(2) requires that variance requests be submitted as separate documents from any plans or applications. The BLM will not consider variance-request documents that are submitted as part of a master development plan, APD, right-of-way application, or other applications for approval. This requirement does not preclude operators from submitting variance requests at the same time that they submit a master development plan or other application. In fact, the final rule encourages operators to submit their variance requests simultaneously with, but separately from, their development plans or applications,

especially if the operators' proposals are contingent upon the BLM approving their variance requests. The BLM's primary rationale for requiring separate submittal is that, in the past, operators have put their variance requests in the cover letters that accompanied their development proposals, where they are sometimes overlooked. Having operators submit their variance requests via a separate Sundry Notice will help the BLM easily identify them when they are submitted simultaneously with other applications. Paragraph (a)(2) clarifies that approval of a plan or application that contains a request for a variance does not constitute approval of the variance. The BLM made this clarification to ensure that variances are submitted separately and brought to the attention of the BLM.

Paragraph (a)(3) tells operators how to submit their variance requests. Operators must use WIS, which is an acronym described in the final rule to mean the Well Information System or any successor electronic filing system that might be developed by the BLM, to file their request, along with any supporting documents associated with it. This paragraph also provides an option for operators to submit a hardcopy application if electronic filing is not possible or practical. In such cases, the operator must submit a variance in hardcopy as directed by the AO in the Field Office having jurisdiction over the lands described in the application. The BLM made minor revisions to this section to clarify the intent of this provision regarding electronic filing, and to provide additional flexibility as the BLM rolls out new electronic systems to replace its existing systems, including the Well Information System and the Automated Fluid Management Support System (AFMSS).

No substantive changes were made to proposed paragraph (a)(4). This paragraph strengthens and standardizes the criteria the BLM uses for granting variances. Under Order 3, the AO was required to make only one determination – whether or not the variance request meets or exceeds the objectives of the applicable minimum standard. Under this paragraph in the final rule, the AO will still have to make that determination before granting a variance. Additionally, the final rule requires the AO to make two more determinations before granting a variance — that issuing a variance: (1) Will not adversely affect royalty income or production accountability; and (2) Is consistent with maximum ultimate economic recovery.

Paragraphs (a)(5) and (a)(6) specify that granting or denying a variance is entirely within the BLM's discretion, and that a variance from a requirement in a regulation does not constitute a variance from any other regulations, including other Onshore Oil and Gas Orders. These paragraphs did not change from the proposed rule.

Paragraph 3170.6(b) affirms the BLM's authority to rescind a variance or modify any condition of approval of a variance due to changes in Federal law, technology, regulation, BLM policy, field operations, noncompliance, or for any other reason.

The BLM received many comments on this section of the proposed rule. A few commenters were concerned that the proposed rule would void existing variances and that operators with existing variances would have to apply for new ones. These commenters were concerned this would place an unnecessary burden on affected parties. They recommended that the provision be revised to expressly "grandfather" existing variances.

The BLM did not make a change to the rule in response to these comments. This final rule does not automatically rescind any existing variance approvals. Rather, it clarifies the BLM's authority to rescind variances and provides the means by which it may rescind an existing approval if necessary. The BLM will re-evaluate existing variance approvals on a case-by-case basis, such as during the FMP application and review process under § 3173.16. For example, if an operator has an existing variance approval from the BLM's previous commingling requirements, but during the FMP approval process the BLM determines that the existing approval is inconsistent with this final rule's new commingling standards, or the operator cannot be exempted from the new commingling standards, then the BLM will rescind the existing variance if the deficiencies are not corrected within the time specified by the BLM.

Several commenters disagreed with the provision in paragraph (b) that allows the BLM to rescind variance approvals and modify conditions of approval. These commenters stated that companies made investments and proceeded with projects based on previously approved BLM variances. These commenters said that rescinding existing authorizations and what they believe to be contractual agreements would pose a great risk to their operations.

The BLM did not make a change in the rule in response to these comments. The BLM's overriding contractual agreement with the operator is the lease agreement, which is expressly made subject to regulations and formal orders subsequently promulgated as long as such regulations are not inconsistent with the lease rights granted or the specific lease provisions (See BLM Lease Form 3100-11). The Department has long interpreted this language as "incorporat(ing) future regulations, even though inconsistent with those

in effect at the time of lease execution, and even though to do so creates additional obligations or burdens for the lessee."[9] The BLM's authority to update the regulations that apply to existing leases and operations is well-established, and this authority necessarily includes the authority to rescind existing variances and authorizations when these variances and authorizations are inconsistent with applicable regulations.

The BLM recognizes that the commingling and off-lease measurement requirements in this rule may result in the termination of existing commingling and off-lease measurement variance approvals. However, the BLM has sought to minimize the adverse impacts of these requirements by providing exemptions for economically marginal properties. These additional exemptions are discussed in further detail in the sections of this preamble that address commingling and off lease measurement. See the Section-by-Section discussions of §§ 3173.1, 3173.14, 3173.25, and 3173.27. For example, the final rule provides public-interest exemptions for operators that cannot meet its new off-lease measurement standards.

One commenter supported the standards in paragraph (a)(4) that the BLM will use to determine whether to grant a variance but went one step further to recommend that operators be required to demonstrate that compliance with the regulation is not feasible, so that the rule's relatively limited opportunities for variances are not abused. The BLM does not expect operators to abuse the variance process, which requires them to submit an application requesting a variance, and provide sufficient information and justification for the variance that the BLM will then review prior to making a determination on the variance request. In fact, this rule strengthens and standardizes the criteria that the BLM

[9] *Coastal Oil & Gas Corp., et al.*, 108 IBLA 62, 66 (1989).

will use to determine whether to grant a variance and requires that the BLM make a determination that "the proposed alternative meets or exceeds the objectives of the applicable requirement(s) of the regulation." As a result, the BLM does not believe the change requested by the commenter is necessary and did not make any changes the rule based on this comment.

A few commenters expressed concern with language in paragraph (b) that allows the BLM to rescind a variance for "other reasons" because, they said, it could result in the BLM acting arbitrarily. The BLM disagrees that this language would allow it to act arbitrarily because paragraph (b) requires the BLM to provide a written justification when it rescinds a variance. The BLM included the term "other reason" because the BLM cannot anticipate every possible situation in which there will be good cause for rescinding a variance. The BLM must preserve its ability to rescind a variance approval if that approval adversely affects royalty income or production accountability, or is not consistent with maximum ultimate economic recovery. If the operator does not agree with the BLM's decision to rescind a variance, the operator may file an appeal under applicable BLM regulations at 43 CFR subpart 3165 – Relief, Conflicts, and Appeals.

A few commenters stated that even though the BLM will provide written justification when it rescinds a variance or modifies a COA, operators should be given a 30-day advance notice if their variance is about to be rescinded, or COA modified, in order to give them an opportunity to avoid a rescission or modification, or to adjust to operating without the variance. The BLM disagrees with this comment and did not change the rule in response. As previously noted, if an operator disagrees with the BLM's decision to

rescind a variance or change a COA, the operator may file an appeal under the applicable regulations.

Section 3170.7 Required recordkeeping, records retention and records submission

Section 3170.7 of the final rule updates BLM regulations to reflect the records-retention requirement for Federal oil and gas leases that Congress established in the 1996 amendments to FOGRMA.[10]

Paragraphs (a) and (b) are the same as in the proposed rule. These paragraphs establish both the entities covered and the time period over which the records-retention requirements apply. In the final rule, purchasers and transporters are held to the same minimum standards as operators for recordkeeping, records retention, and records submission—i.e., to maintain all records that are relevant to determining the quality, quantity, disposition, and verification of production from Federal and Indian leases. As described in the proposed rule, the BLM has authority to impose these requirements on purchasers and transporters under FOGRMA. Specifically, Section 103(a) of FOGRMA, 30 U.S.C. 1713(a), requires persons involved in transporting and purchasing oil or gas through the point of first sale or the point of royalty computation, whichever is later (along with persons involved in producing or selling), to "establish and maintain any records, make any reports, and provide any information that the Secretary may, by rule, reasonably require."

Although paragraph (c) did not change substantively from the proposed rule, the final rule splits it up into two paragraphs for clarity. Paragraph (c)(1) states that records pertaining to Federal leases, units, or CAs must be maintained for at least 7 years,

[10] Federal Oil and Gas Royalty Simplification and Fairness Act of 1996, Pub. L. 104-185, 110 Stat. 1700 (Aug. 13, 1996).

consistent with applicable statutory requirements. Paragraph (c)(2) codifies the applicable statutory requirements for further retention beyond 7 years under the circumstances specifically identified by statute (see 30 U.S.C. 1724(f)), as required under the 1996 amendments to FOGRMA.

Similarly, although paragraph (d) did not change substantively from the proposed rule, the final rule splits it up into two paragraphs for clarity. Paragraph (d)(1) states that records pertaining to Indian leases, units, or CAs must be maintained for at least 6 years, consistent with applicable statutory requirements. Paragraph (d)(2) codifies the applicable statutory requirements for further retention beyond 6 years under the circumstances specifically identified by statute (see 30 U.S.C. 1713(b)). The records-retention requirement on Indian leases remains unchanged because the 1996 amendments to FOGRMA, by their express terms, applied only to Federal leases and not to Indian leases.

Paragraph (e)(1) addresses the discrepancy between the records-retention requirements for Federal (7 years) and Indian (6 years) leases, as relevant to units and CAs that contain both Federal and Indian leases. No substantive changes were made as part of the final rule. However, the phrase, "but a judicial proceeding or demand is not commenced within 7 years after the records are generated, the record holder must retain all records regarding production from the unit or CA until the Secretary or his designee releases the record holder from the obligation to maintain the records" has been eliminated from this paragraph of the proposed rule and moved to its own paragraph (e)(2).

In paragraph (e)(2) of the proposed rule, which is now paragraph (e)(1) of the final rule, the phrase "or until the Secretary or his designee releases the record holder from the

obligation to maintain the records, whichever is later," was removed from the final rule in order to more closely track the authorizing language in FOGRMA, and also to make the record-retention obligation clearer.

Paragraph (f) requires the record holder to maintain an audit trail and is unchanged from the proposed rule.

Paragraph (g) requires operators, purchasers, and transporters to place specific identifying information on all records, including source records, used to determine quality, quantity, disposition, and verification of production attributable to a Federal or Indian lease, unit PA, or CA. The proposed rule would have required record holders to use BLM-assigned FMP numbers on such records. The final rule is revised to allow record holders, in lieu of an FMP number, to use the lease, unit PA, or CA number, as applicable, on their records, including source records. In any case, the record holder must also include a unique equipment identifier, such as a unique tank identification number or meter station number. The BLM made this change in response to many comments that it would be difficult or impossible for some record holders to modify their electronic systems to accommodate FMP numbers on their records. In these instances, the final rule allows record holders to use the lease, unit PA, or CA number instead of the FMP number.

Paragraph (h) requires operators, purchasers, and transporters to provide all records to the BLM upon request. This ensures that all records—whether they are created by lessees, operators, transporters, or purchasers—are readily available to the BLM. The BLM did not receive any comments on this paragraph and did not change it in the final rule.

Paragraph (i) requires that all records be legible. The BLM did not receive any comments on this paragraph and did not change it in the final rule.

Paragraph (j) requires that all records requiring a signature must also have the signer's printed name. The BLM did not receive any comments on this paragraph of the proposed rule and did not change it in the final rule.

The BLM received a number of comments on § 3170.7 of the proposed rule as a whole requesting various changes to be made to the proposed requirements. Each of these comments is addressed below.

One commenter stated that maintaining audit records for 7 years, as required in paragraph (c)(1), would result in unnecessary costs for purchasers and transporters, and that they should not have to account for production volumes. The BLM does not agree with this comment, nor can it make the changes suggested by the commenter. As discussed earlier, the records retention period set by FOGRMA for Federal leases is now 7 years and the change in retention period in this final rule merely conforms the regulations to that statutory authority.

A number of other commenters asserted that the BLM does not have the authority to hold purchasers and transporters to the same records-retention and recordkeeping requirements as lessees and operators, as outlined in paragraphs (a) and (f) of §3170.7. Other commenters indicated that they did not see a need for this new requirement and that it would be too costly. Still others disagreed that FOGRMA authorizes the BLM to impose recordkeeping and records-retention requirements on purchasers and transporters in the first instance. One commenter argued that the BLM had not properly defined "any person directly involved in producing, transporting, purchasing, selling, or measuring oil

and gas" under FOGRMA, and therefore had improperly extended these recordkeeping requirements to purchasers and transporters.

The BLM disagrees with these comments. Section 103(a) of FOGRMA, 30 U.S.C. 1713(a), requires a "lessee, operator, or other person directly involved in developing, producing, transporting, purchasing, or selling oil or gas…through the point of first sale or the point of royalty computation, whichever is later, [to] establish and maintain any records, make any reports, and provide any information that the Secretary may, by rule, reasonably require." While FOGRMA does not specifically define "any person directly involved," the intent of the provision is clear. It authorizes the Secretary to establish by rule requirements for anyone involved "…in developing, producing, transporting, purchasing, or selling oil or gas," which plainly includes purchasers and transporters. 30 U.S.C. 1713(a) (emphasis added).

Based on its experience in the field, the BLM believes it is appropriate to implement this statutory authority and have purchasers and transporters adhere to the same recordkeeping and records-retention requirements as lessees and operators. This is because the BLM must occasionally rely on purchasers' and transporters' records to verify production when operators do not maintain their own records properly, or go out of business, or are acquired by other companies and their records are destroyed. For this reason, the BLM believes that it is important for everyone involved in the production and sale of oil and gas produced from Federal and Indian leases to be responsible for maintaining and providing the necessary records to account for and verify that production. The BLM did not make any changes in response to these comments.

Another commenter said the BLM did not adequately analyze the economic impact that this requirement would have on purchasers and transporters. The BLM does not agree with this comment. As part of this rulemaking process the BLM prepared an *Economic and Threshold Analysis For Final Rule Onshore Oil and Gas Operations; Federal and Indian Oil and Gas Leases; Site Security* (Economic and Threshold Analysis). That analysis specifically analyzed, among other things, the impact of these proposed recordkeeping requirements on purchasers and transporters. Based on that analysis, the BLM estimates that 200 to 300 purchasers and transporters will have to comply with this final rule's new recordkeeping and records-retention requirements. However, it is likely that many purchasers and transporters already compile records that will, for the most part, satisfy this rule's requirements, and therefore the additional compliance costs imposed by this rule should be minimal. For more details, please see the Economic and Threshold Analysis.

Several commenters said that some transporters do not have space to store records and would not be capable of meeting the paragraph (a) requirements. They said that transporters would create inaccurate records, and that operators would be held responsible. They asked that the BLM not hold operators responsible for transporters' recordkeeping violations. Conversely, some commenters said operators may provide incorrect information to purchasers and transporters, such as incorrect FMP numbers, which could subject purchasers and transporters to recordkeeping penalties if they were to use the inaccurate information in their records. The BLM does not agree with the concerns raised by these commenters, as under the rules each party will be responsible for the content of their own records and must also bear some responsibility for ensuring

the accuracy of the information they are tracking. The BLM does not believe that the provision should be modified to account for the possibility that operators might provide faulty information to a purchaser or transporter. Parties bear the responsibility to ensure the accuracy of their own records, and the BLM anticipates that provision of faulty information to a purchaser or transporter by an operator could be handled on a case-by-case basis in the enforcement context. The final rule was not changed as a result of these comments.

Some commenters said the BLM should make the records-retention requirements for both Federal and Indian leases the same – 6 years. Paragraph (c) requires Federal-lease operators to retain their records for 7 years (consistent with Congress' 1996 amendments to FOGRMA), while paragraph (d) requires Indian-lease operators to retain theirs for 6 years. One commenter said the 6-year retention requirement for all records under Order 3 has not been a problem and questioned why Congress extended the retention period for Federal-lease operators from 6 years to 7 years. The BLM understands these concerns, but the retention period for records maintained by Federal-lease operators is 7 years by statute. 30 U.S.C. 1724(f). That statutory requirement has been in place for 20 years. This final rule simply codifies that requirement. Thus, the BLM did not change the final rule in response to these comments.

Several commenters expressed concern about the requirement in paragraph (g) of the proposed rule that lessees, operators, purchasers, and transporters place FMP numbers on all of their source records, particularly records generated by flow computers. They said that flow computers cannot handle the 11-digit FMP numbers and that it would take operators years to modify their production accounting systems to accommodate the new

numbers. The BLM agrees with these commenters and changed the final rule to allow lessees, operators, purchasers and transporters, as an alternative, to use the lease, unit PA, or CA number, along with a unique equipment identifier, on their records. The BLM believes this change will simplify the final rule's record-keeping requirements because in its experience lessees, operators, purchasers and transporters are already using a lease, unit PA, or CA number, plus some unique equipment identifier in connection with existing operations, which means this information is already reflected on records being generated under existing recordkeeping systems.

In addition to the preceding comments on specific provisions of § 3170.7, the BLM received some general comments on § 3170.7 that were not directed to any specific paragraph. Several commenters said the recordkeeping requirements do not address new production reporting technology and practices that are used by regulators outside of the U.S., such as the Norwegian Petroleum Directorate. These commenters did not suggest any specific changes, and therefore the BLM did not make any changes in the final rule in response to these comments. That said, it should be noted that the BLM is currently updating its existing database system (AFMSS) that it uses to track Federal and Indian oil and gas production. As part of this comprehensive update, the BLM is following data management models and standards established by industry organizations, such as the Professional Petroleum Data Management Association. These update efforts respond to the concerns raised by commenters.

Another commenter said the new recordkeeping and records-retention requirements would cause problems for the BLM. This commenter said BLM field offices do not have room for the additional records that would be generated under the final rule. The BLM

disagrees with this commenter. The BLM will not be storing or accepting all of the records that a lessee, operator, purchaser, or transporter will be required to create and retain under this final rule, rather records must be available to the BLM if requested (see § 3170.7(h)). The BLM did not change the final rule as a result of these comments.

Several commenters suggested that requiring purchasers and transporters to keep and retain records would be redundant because purchasers and transporters already provide this information to the operators, who use it to fill out their own production records. The BLM agrees that operators do often base their production reporting on information that purchasers and transporters provide them, however, the BLM cannot confirm that this happens in all cases. Moreover, as noted, operators' records may sometimes be or become unavailable. Requiring each party involved in production from Federal and Indian oil and gas leases to maintain its own records allows the BLM to compare the information and make an independent determination that production is being properly accounted for and that the correct royalties are being paid.

One commenter said this section's new recordkeeping and records-retention requirements will be costly and cause delays, and will discourage oil and gas development on Federal lands, as well as on adjacent State and private lands. The commenter said this in turn will result in lost royalties and jobs. The BLM does not agree with this comment. These recordkeeping requirements are not substantially different from the requirements that operators are currently following (e.g., the records retention requirements have only increased from 6 to 7 years). As explained above, it is likely that most purchasers and transporters are already maintaining records that will, for the most

part, satisfy this final rule's requirements. No change was made to the final rule as a result of this comment.

Section 3170.8 Appeal procedures

Section 3170.8 provides that BLM decisions, orders, assessments, or other actions under part 3170 are administratively appealable (first to the BLM State Director and then to the Interior Board of Land Appeals) under 43 CFR 3165.3(b), 3165.4, and part 4. The BLM did not receive any comments on this section; however, in response to comments received on provisions of the proposed rules to replace Orders 4 and 5 the BLM made several changes to this section.

The language from the proposed rule was moved to a new paragraph (a) and a new paragraph (b) was added that creates a separate appeal process for decisions made by the BLM, based on a recommendation from the PMT, for approval or denial of specific measurement equipment or procedures. Under paragraph (b) a party may file a request for discretionary review by the ASLM. Paragraph (b) also provides that the ASLM may delegate this review function as he or she deems appropriate, in which case the application for discretionary review must be made to the person or persons to whom the review function has been delegated.

A specific appeals procedure for recommendations from the PMT was developed for two reasons. First, such a procedure responds directly to comments received on Orders 4 and 5 specifically requesting a procedure to review decisions made by the PMT. Second, the BLM determined that a separate appeal process is necessary because it determined that PMT reviews did not fit under the existing appeals procedure at 43 CFR 3170.8. As explained in this preamble and the preambles for the rules to replace Orders 4 and 5, the

PMT will review new measurement technologies and methods and then make recommendations to the BLM as to whether they should be approved. It is the BLM's intent that those approvals be made at the national or Washington Office level, as a result those decisions would not properly be appealable to a BLM State Director as contemplated in paragraph (a). The new language under paragraph (b) reads: "For any recommendation made by the PMT, and approved by the BLM, a party affected by such decision may file a request for discretionary review by the Assistant Secretary for Land and Minerals Management. Under paragraph (b), the Assistant Secretary may delegate this review function as he or she deems appropriate, in which case the affected party's application for discretionary review must be made to the person or persons to whom the Assistant Secretary's review function has been delegated."[11]

Section 3170.9 Enforcement

Section 3170.9 provides that noncompliance with any requirements of part 3170 or any order issued thereunder may result in enforcement actions under 43 CFR subpart 3163 or any other remedy available under applicable law or regulation.

The BLM received numerous comments regarding the BLM's proposal, in proposed § 3170.9, not to include in this rule the enforcement, corrective action, and abatement period provisions that were in Order 3, and instead to develop an internal Inspection and Enforcement Handbook that would provide direction to BLM inspectors on how to classify a violation as major or minor, and what the corrective action and timeframes for correction should be. These comments and the BLM's response are discussed later in this preamble in connection with § 3173.29.

[11] It should be noted that decisions by the Assistant Secretary would not be reviewable by the Interior Board of Land Appeals.

Subpart 3173 – Requirements for Site Security and Production Handling and Related Provisions

Section 3173.1 Definitions and acronyms

This section defines the terms used in subpart 3173 that pertain to site security and production handling. The BLM did not receive any comments on a majority of the definitions that appeared in proposed § 3173.1. Those definitions, for which we received no comment, were carried forward into this final rule and are not discussed further here. The following discussion summarizes and responds to comments that the BLM received on a handful of proposed definitions, describes modifications to some of those definitions, and describes five definitions that were added to § 3173.1 of the final rule: "Free water," "permanent measurement facility," "payout period," "royalty net present value (NPVR)," and "royalty-free use of oil and gas."

At the outset it should be noted that as explained in the preamble to the proposed rule, a number of the definitions in § 3173.1 are the same definitions that were found in Order 3, with only minor simplifications or clarifications.

As noted in the Section-by-Section discussion for § 3170.3, the acronym for "British thermal unit (Btu)" has been moved from this section to § 3170.3 of the final rule because it is used in more than one subpart of § 3170. The acronym BIA (Bureau of Indian Affairs) was added to this final rule because it is used in §§ 3173.14 and 3173.23.

Similarly, the acronym for "CAA (commingling and allocation approval)" was provided in the proposed rule, but the term was not otherwise defined. One commenter suggested that a definition for this term be provided. The BLM agrees with this comment and has provided a definition in the final rule for this commonly used term. The final

rule defines “commingling and allocation approval (CAA)” to mean “a formal allocation agreement to combine production from two or more sources (leases, unit PAs, CAs, or non-Federal or non-Indian properties) before that production reaches an FMP.” This definition is consistent with the commonly understood meaning of the term and its use in the proposed rule.

The BLM also replaced the term “low-volume property” with the term “economically marginal property” and modified the definition based on comments received. The term “low-volume property” was intended to identify category of leases, unit PAs, and CAs for which commingled measurement of production may be justified, even though the property would not meet the conditions of proposed § 3173.14(a)(1) regarding mineral interest ownership of commingled production. In response to comments, the BLM made a number of changes to this definition, most notably changing the term to “economically marginal property” in the final rule.

The BLM believes this new term is more reflective of the BLM’s intent, which is to describe a type of property that should be allowed to be part of a CAA in order to avoid premature plugging and abandonment. The thresholds that the proposed and final rules use to identify a property as at risk of being shut-in are not exclusively volume-based. The new name recognizes that the thresholds are actually based on production volume and other economic considerations, including commodity price, fixed and variable operating costs, and taxes.

Specifically, under both the proposed and final rules, the BLM can approve commingling in two circumstances relating to economics of well operations: (1) When a prudent operator, for economic reasons, would plug a well or shut-in the lease, unit PA,

or CA instead of spending the money to achieve non-commingled measurement of production; or (2) When the capital expenditure on equipment necessary to achieve non-commingled measurement of production would exceed the net present value of projected Federal or Indian royalty over the life of the new equipment. The BLM captured both of these circumstances in the definition of a "low-volume property" in the proposed rule, and carried that structure into the final rule's definition of an "economically marginal property."

Under the final rule, a lease, unit PA, or CA qualifies as an "economically marginal property":

> (1) "If the operator demonstrates that the expected revenue generated from crude oil or nature gas production volumes on that property (above the operating costs associated with those production activities) is not sufficient to cover the nominal costs of the capital expenditures required to achieve measurement of non-commingled production of oil or gas from that property over a payout period of 18 months," or
>
> (2) If the operator demonstrates that "its royalty net present value, or the discounted value of the Federal or Indian royalties collected on revenue earned from crude oil or natural gas production on the lease, unit PA, or CA over the expected life of the equipment that would need to be installed to achieve non-commingled measurement volumes, is less than the capital cost of purchasing and installing this equipment."

The final rule takes a somewhat different approach than the proposed rule to define these two circumstances. Specifically, the final rule:

- Changes the threshold for what qualifies as an economically marginal property from a 10 percent, before tax, rate of return in the proposed rule to an 18-month, after-tax, payout period in the final rule;
- States explicitly that the economic analysis considers operating costs;
- Clarifies that the analyses for oil and gas commodities are done separately, based on the income streams from the commodity and the expenses required to achieve non-commingled measurement of that commodity; and
- States explicitly that if economic circumstances change, and a Federal or Indian lease, unit PA, or CA ceases to be an economically marginal property, the lease, unit PA, or CA will no longer qualify for a CAA.

The BLM changed the first economic threshold test from a 10 percent, before tax, rate of return in the proposed rule to an 18-month, after-tax, payout in the final rule, primarily based on comments received. As explained in the preamble to the proposed rule, the initial test was developed based on the provisions of Instruction Memorandum (IM) 2013-152. The purpose of the economic analysis in IM 2013-152, the proposed rule, and the final rule is to simulate the analysis that a prudent operator would make in deciding whether or not to invest money to achieve non-commingled measurement of production. If that analysis concludes that it would be uneconomic for the operator to make the investment and they would instead opt to shut in the property, then the BLM will grant commingling approval. In these situations, the BLM believes that it is in the public interest to sustain production by allowing commingling, even if commingled measurement may be somewhat less accurate and hard to verify than non-commingled measurement.

The only question is how best to identify the point at which a prudent operator would choose to shut in rather than invest in equipment to achieve non-commingled measurement. Several commenters said the proposed 10 percent rate-of-return cutoff point (calculated before Federal, State, and local taxes) was too low, and that the BLM, should instead use a 20 percent rate of return. Other commenters recommended replacing the 10 percent rate of return threshold with a payout period. The BLM agrees with the commenters who recommended that the BLM use a payout period method rather than a rate-of-return method, because the former provides a simpler and more objective picture of whether a particular course of action is economically viable, and it is a method commonly used by industry.

Under the rate-of-return method in the proposed rule, the BLM would have had to assume a rate of return on initial investment that would be sufficient for a prudent operator to install metering equipment to achieve non-commingled measurement of a lease, unit PA, or CA. The payout method used in the final rule uses a formula to determine whether the production volumes at that lease, unit PA, or CA are sufficient to generate enough net revenue, after taxes and operating costs, to cover the nominal cost of equipment installation within the payout period. Additionally it was clear from the comments received that different companies apply different rates of return to evaluate their investments. For these reasons, the BLM felt it was appropriate to replace the rate-of-return method with the payout method.

One commenter stated that industry typically uses a payout period of 6 months to 18 months as the criterion for deciding whether or not to invest in a new project. The commenter went on to state that a 15 percent rate of return (before tax) yields

approximately the same result as a 22-month payout. An 18-month payout would be approximately the same as a 20 percent (before tax) rate of return, which is a threshold suggested by several commenters. Based on these comments, the BLM believes that an 18-month payout period is reasonably representative of the threshold a prudent operator would use to determine the economic viability of achieving non-commingled measurement of production.

Additionally, there were a few comments that recommended that the BLM evaluate alternative cost-benefit methodologies and definitions, including those found in the Federal Oil and Gas Royalty Simplification and Fairness Act of 1996, and the Interstate Oil and Gas Commission report, entitled Marginal Wells: Fuel for Economic Growth, (2012). The BLM agrees with these comments, noting that the proposed 10 percent rate of return was a starting point, as the proposed rule specifically asked for feedback on the suitability of the BLM's using this rate of return for identifying a "low-volume property." The BLM believes the 18-month payout threshold used in the final rule is consistent with these comments.

Also unlike the proposed definition of "low-volume property," the definition of "economically marginal property" in the final rule specifically considers taxes, fixed and variable operating costs, and commodity prices. While the "low-volume property" definition in the proposed rule implicitly included operating costs and commodity prices in the rate-of-return calculation, it did not include taxes. The BLM believes that the addition of taxes and the explicit addition of operating costs and commodity price considerations help to make the payout calculation more representative of an economic analysis that a prudent operator would perform.

Finally, in the final rule definition, the BLM clarified that the economic analyses are specific to the commodity to which the commingling request applies. For example, if a lease produces a high volume of gas with small amounts of associated condensate, and the operator wishes to commingle the condensate production with similar volumes of condensate produced from private leases, the economic analysis performed under § 3173.14(b)(1) would only consider the income, costs, and payout period related to measuring the condensate. The BLM made this addition to the final rule to clarify that neither operators nor BLM field offices should include the income and costs from a commodity which the operator is not proposing to commingle. The proposed rule was silent on whether the economic analysis should be based on total oil and gas production or just on the commodity the operator requests for commingling. However, it was always the BLM's intent that this analysis occur on the basis of the commodity for which commingled measurement is proposed. This clarification in the final rule is consistent with that intent.

In support of the new definition for "economically marginal property" the BLM added two additional definitions – "payout period" and "royalty net present value (RNPV)" – each of which is discussed (in alphabetical order) below.

In addition, in the final rule the BLM added a definition for the term "free water." That term appeared multiple times in the proposed rule but was not defined because the BLM believes it is commonly understood by the industry. While the BLM did not receive any comments on the use of this term, the BLM determined that it should nevertheless include a definition in the final rule to clarify its intent with respect to the use of the term in this regulation. The final rule therefore defines "free water" as "the measured volume

of water that is present in a container and that is not in suspension in the contained liquid at observed temperature." This definition tracks the commonly understood definition of the term used routinely by industry and the BLM.

The final rule modifies the definition of the term "land description" from the proposed rule in § 3173.1, to clarify the information needed by the BLM. The purpose of defining the term "land description" in both the proposed and final rules is to ensure that the geographic location information that operators occasionally provide to the BLM meets the applicable standards.

Under the proposed rule, the BLM defined "land description" to mean "the geographical coordinates referenced to the National Spatial Reference System, North American Datum 1983 or latest edition, in feet and direction from the nearest two adjacent section lines, or, if not within the Rectangular Survey System, the nearest two adjacent property lines, generated from the BLM's current Geographic Coordinate database (Public Land Survey System)." The final rule modifies this definition to require operators to provide information about location that is consistent with the U.S. Department of the Interior's *Manual of Surveying Instructions* (2009) and that includes information about the quarter-quarter section, section, township, range, and principal meridian of the proposed location. This definitional change was not suggested by commenters, but was made to make the definition in § 3173.1 consistent with the existing geographic location information requirements of 43 CFR. 3162.6, which requires operators to have geographic location information on their well- and facility-identification signs. Subpart 3173 requires operators to record land descriptions on their site facility diagrams, FMP applications, water draining and hot-oiling paperwork, and

reports of theft or mishandling of production. By confirming the definitional provisions of these two requirements, the final rule ensures consistency and allows BLM inspectors to cross-reference the land description information on a site facility diagram with the geographic location information on a given facility sign and confirm that they are inspecting the correct measurement facility. It should be noted that the definition of "land description" does contemplate the use of "other authorized survey designations acceptable to the AO, such as metes-and-bounds, or latitude and longitude," which accounts for instances where the land may be unsurveyed or another survey method is necessary.

As noted in the discussion above, to support the implementation of the definition of "economically marginal property" the BLM added a definition for the term "payout period," which is defined as "the time required, in months, for the cost of an investment in an oil or gas FMP at a specific lease, unit PA, or CA to equal the nominal revenue earned from crude oil production for an oil FMP, or natural gas production for a gas FMP, minus taxes, royalties, and any operating and variable costs." This definition is consistent with the intent behind the definition of "economically marginal property" established by this final rule. The definition clarifies that payout periods are determined independently for each oil and gas FMP at a given lease, unit PA, or CA.

The BLM included a definition for the term "permanent measurement facility" to the final rule in response to a commenter's concern with § 3173.12(d) of the proposed rule, which required operators to obtain FMP approval before any production leaves a measurement facility. The commenter pointed out that during well testing, and before initiating production, operators send oil to a temporary tank or send gas down the sales

line to determine the well's production rate. The test results help the operator determine the size and type of measurement facility needed. The commenter said it would be overly burdensome to require operators to obtain FMP approvals for temporary measurement equipment used during well testing as well as for permanent measurement facilities.

The BLM agrees in part with this comment and has provided a definition for the term "permanent measurement facility," which means "all equipment constructed or installed and used on-site for 6 months or longer for the purpose of determining the quantity, quality, or storage of production that meets the definition of FMP under § 3170.3." In addition, the final rule also clarifies that paragraphs (d) and (e) of § 3173.12, which pertain to when operators must apply for their FMP numbers, apply only to permanent measurement facilities. Therefore, temporary equipment used during well testing operations, including temporary tanks to store oil, are not affected by the FMP requirement. However, since a "sales line" by definition is a permanent facility, and any gas that travels through it is royalty bearing, the BLM added a 6-month timeframe to the definition of permanent measurement facility to make clear that the FMP requirement does not apply during well testing. Six months was chosen because that is when the BLM typically performs its first environmental inspection of production facilities after a well is completed, and after that point, the continued use of temporary equipment at the wellsite would raise concerns that an operator is having difficulty installing its permanent facilities.

The BLM added a definition of "royalty net present value (RNPV)" to support implementation of the term "economically marginal property." The final rule defines RNPV as the "net present value of all Federal or Indian royalties paid on revenue earned

from crude oil production or natural gas production from an oil or gas FMP at a given lease, unit PA, or CA over the expected life of the metering equipment that must be installed for that lease, unit PA, or CA to achieve non-commingled measurement." This definition is consistent with the intent behind the definition of "economically marginal property" established by this final rule.

The BLM also received comments concerning its use of the term "royalty-free use." Specifically, a commenter expressed concern that the terms "beneficial use" and "royalty-free use" were used interchangeably multiple times in the preamble discussion of the proposed rule, without any definitions being offered for either term. The commenter also noted that only the term "royalty-free use" was used in the proposed rule itself, and no definition was provided. The commenter suggested a definition of "royalty-free uses," which specifically included all equipment and facilities serving directionally or horizontally drilled wells that may be located off the lease.

The BLM agrees with the commenter that it should not have used the two terms interchangeably. The BLM should have used the term "royalty-free use" rather than "beneficial use," because the former is more specific and more applicable in the context of this rule. For example, the term "beneficial use" sometimes refers to using produced water for other purposes, such as a water source for livestock or for enhancing vegetation regrowth during reclamation, both of which have nothing to do with production verification and accountability.

The BLM did not, however, feel it was necessary to provide a definition for royalty-free use at this time. First, the royalty-free use of oil or gas from onshore Federal and Indian leases, units, and CAs is governed by the longstanding Notice to Lessees and

Operators 4A (NTL-4A) and the BLM believes the concept to be well understood by operators. Second, the BLM plans to update its regulations pertaining to the royalty-free use of oil and gas as part of a separate rulemaking – Waste Prevention, Production Subject to Royalties, and Resource Conservation (81 FR 6616) (Waste Prevention Rule) – that will provide additional clarity on the royalty-free use of oil and gas from onshore Federal and Indian leases. Until such time as the Waste Prevention Rule is finalized, for the purpose of this final rule, the meaning of the term "royalty-free use of oil and gas" will be consistent with the royalty-free use of oil or gas as currently defined in NTL-4A. No changes were made to proposed rule in response to this comment.

Section 3173.2 Storage and sales facilities - seals

Paragraphs (a) and (b) of § 3173.2 require any lines entering or leaving any oil storage tank or storage facility to have valves capable of being effectively sealed during specific operational phases -- production, sales, water draining, or hot oiling.

Paragraph (c) identifies the specific types of valves that are not considered "appropriate valves" (i.e., valves that must be sealed during the production phase or the sales phase) and, as such, are not subject to the requirements of subpart 3173. These valves include valves on production equipment; valves on water tanks, so long as there is no possibility of access to production; valves on tanks contains waste or slop oil; sample cock valves; fill-line valves on certain marginal production tanks; gas line valves; heating system valves; pump valves; tank vent-line valves; and sales, equalizer or fill-line valves on systems where production may only be removed through an approved metering system.

Paragraph (d) prohibits tampering with an "appropriate valve," and specifies that

tampering may result in assessment of civil penalties for knowingly or willfully preparing, maintaining, or submitting false, inaccurate, or misleading information under Section 109(d)(1) of FOGRMA, 30 U.S.C. 1719(d)(1), and 43 CFR 3163.2(f)(1), or for knowingly or willfully taking, removing, transporting, using, or diverting oil or gas from a lease site without valid legal authority under Section 109(d)(2) of FOGRMA, 30 U.S.C. 1719(d)(2), and 43 CFR 3163.2(f)(2).

The BLM received many comments on proposed § 3173.2. Several commenters expressed concern with the relationship between the general prohibition against tampering under § 3170.4 of the proposed rule and the specific prohibition against tampering with any appropriate valve under proposed paragraph (d) of this section.

One commenter, in particular, was concerned that under the new requirements the commenter would not be able to perform maintenance on valves without the procedure being considered tampering or unauthorized seal removal. Two other commenters stated that the criteria for determining what qualifies as tampering were overbroad and ambiguous. They also questioned if an unintentional act or human error would be considered tampering.

The BLM believes these comments have merit and, as discussed previously, has added a definition of the term “tampering” to § 3170.3 of the final rule. As previously noted, “tampering” means any deliberate adjustment or alteration to the meter or measurement device, appropriate valve, or measurement processes that could introduce bias into the measurement or affect the BLM’s ability to independently verify volumes or qualities reported. This definition should help the public understand how the BLM will determine whether a particular incident constitutes tampering.

As for operator maintenance on valves, such acts will not be considered tampering as long as the maintenance work does not alter the valve or introduce bias into the measurement. If the valve being worked on falls under the seal requirements (i.e., it is used in the process for determining the quantity or quality of oil for royalty purposes), it is permissible to remove the seal for maintenance purposes as long as the specific reason for removing the seal is noted in the seal record. The BLM did not change the final rule to address this comment.

Another commenter stated that valves would need to be changed out in response to the requirements under this section, making marginal wells unprofitable. The BLM does not believe that any valves will need to be changed out because these requirements are the same as those in Order 3, which already requires all appropriate valves capable of being effectively sealed to be sealed. Since this provision merely continues existing requirements, no changes to the final rule were made in response to this comment.

Another commenter was concerned that proposed § 3173.2(c)(3), which exempts valves on tanks that contain oil that the AO or authorized representative (AR) has determined to be waste or slop, would impose additional costs on operators because of the time it could take the AO or AR to make the determination. While waiting for the AO or AR determination, the commenter said, operators would have to spend money on additional tanks to store their slop or waste oil. The BLM disagrees. This requirement is very similar to the existing requirements of Order 3, and therefore will not impose any additional burdens on operators. A company will not need a new tank while waiting for a determination from the AO or AR; rather the company will have to properly seal any tanks holding such oil until it is determined to be slop oil or waste oil. The cost to obtain

a seal should not present any sort of monetary hardship for the operator. Thus, the BLM did not make any changes in response to this comment.

Section 3173.3 Oil measurement system components - seals

Section 3173.3 of the final rule identifies a nonexclusive list of the components used in LACT meters or Coriolis oil measurement systems (CMS) that must be effectively sealed to indicate whether tampering may have occurred. The BLM received a few comments on this section of the proposed rule.

One commenter stated that the proposed seal requirements are much more extensive than those in Order 3 and will create additional burden and expense for the operator because seals routinely break and the seal-reporting requirements for these instances under § 3173.9 are fairly detailed. In addition, the commenter said there is a risk of delayed revenue while the operator waits for the AO to approve removal of a seal. The BLM disagrees that the seal requirements are much more extensive than those found in Order 3. This final rule adds only four items to the Order 3 list of components that are used for quantity or quality determination of oil and that must therefore be effectively sealed. Those four additional components are the right-angle drive, totalizer, prover connections, and valves on diverter lines larger than 1 inch in nominal diameter. The BLM does not believe seal requirements for these components are particularly burdensome, and, since they all are points where tampering could occur, it is important that they be subject to the same sealing requirements as other components of the measurement system.

As for the commenter's concern about revenue being delayed while an operator waits for the AO to approve removal of a seal – under normal circumstances, there is no need

to wait for AO approval to remove a seal. Seals may be taken off and put back on as long as these events are recorded in the seal record. In the event a Federal seal is placed on a component, the AO must provide approval prior to any removal; however, an AO can provide verbal approval to remove a Federal seal as soon as the associated violation is corrected. These comments did not result in any changes to the final rule.

One commenter said they could not determine what effect proposed § 3173.3 would have on their operations when related requirements – contained in the rulemaking that is replacing Order 4 (oil measurement) – had not yet published or been made available for public comment. The additional requirements cross referenced in proposed § 3173.3 can be found in proposed 43 CFR 3174.8(a) (for LACT systems) and proposed 43 CFR 3174.9(e) (for Coriolis systems). The BLM recognized the need for both sets of requirements to be available for public comment at the same time, which is why the comment period for this proposed rule was extended from its original September 11, 2015, closure date until December 14, 2015, in order to ensure there was sufficient overlap between the comment periods for the proposed rules for subparts 3173, 3174, and 3175. This overlap gave operators an opportunity to review the parts of proposed subpart 3174 that were referenced in § 3173.3. This comment did not result in any changes to the final rule.

Another commenter said that the seal requirements for oil measurement systems are only appropriate at those points where theft or mishandling can realistically occur, and the requirements under this section are unnecessary. The commenter suggested that the BLM maintain the seal requirements in Order 3, which address the sealing of tanks when oil is sold through a LACT. The BLM did not make a change in response to this

comment. The BLM does not believe that theft or mishandling, which affects only the quantity of the oil being measured, are the only factors that may impact the determination of royalties owed. The quality of the oil being produced will also influence royalty determination. For this reason, the BLM believes it is necessary to have a section in the rule dedicated to ensuring that all components of an oil measurement system that are used to determine the quality and quantity of oil must be effectively sealed. The BLM does agree with the commenter's suggestion that we maintain Order 3's seal requirements, which is why they were incorporated into the list of components that must be sealed under § 3173.3 of this final rule.

The BLM also received several comments stating that some components of a LACT are not capable of being sealed, such as flow computers and back pressure valves. The commenters said flow computers are not capable of accepting a seal and back-pressure valves cannot operate if they are sealed. These commenters recommended that the BLM not subject these two components to the § 3173.3 sealing requirements. A third commenter stated, without providing specifics, that some of the devices listed in this proposed section are not constructed to be sealed. The commenter suggested that sealable components would have to be purchased or a secondary device would have to be built to allow for sealing. Without more specific information, the BLM cannot address this comment. However, prior to issuing this final rule, the BLM re-assessed the components listed in this section and continues to believe, except as noted below, that all of the identified components can reasonably be sealed, as all of them are routinely sealed today.

With regards to requiring flow computers to follow this final rule's seal requirements, commenters should be aware that the intent of sealing the flow computer is to have a log

of when someone accesses the software. Sealing a flow computer could be accomplished through a lead wire seal, adhesive backed paper (sticker), or plastic seal, or a password and an event log. However, in response to this comment, the BLM has changed the final rule. The BLM removed flow computers from paragraph (a)(5) of this section and added a new item to the list – LACT or CMS – in paragraph (a)(6), giving the operator the opportunity to decide how best to ensure that the flow computer is sealed. As a result of these changes, paragraphs § 3173.3(a)(6) through (12) in the proposed rule are redesignated as § 3173.3(a)(7) through (13) in the final rule.

As for concerns raised about the inability to seal back-pressure valves, the BLM has made a change in response to this comment. In 3173.3(a)(7) of the final rule (§ 3173.3(a)(6) in the proposed rule), the BLM has clarified that the component that is subject to the seal requirement is the back pressure valve pressure adjustment. Sealing the pressure adjustment on the back-pressure valve was already required under Order 3. The BLM believes it is important to preserve this requirement because if the pressure adjustment is changed after a meter proving, it could change the flow rate of hydrocarbons through the meter, impacting the accuracy of the measurement based on the prior proving.

Section 3173.4 Federal seals

In the final rule, paragraph (a) of § 3173.4 codifies the authority in section IV of Order 3, which calls for the BLM to place a Federal seal on any appropriate valve, sealing device, or oil meter system component that does not comply with the requirements of final §§ 3173.2 or 3173.3. Paragraph (b) clarifies that the placement of a Federal seal

does not relieve the operator of the requirement to comply with §§ 3713.2 or 3173.3. Paragraph (c) prohibits the removal of a Federal seal without BLM approval.

The BLM received several comments requesting that Federal seals not be attached immediately upon discovery of a violation that warrants placement of a seal. Two commenters requested a 10-day notice prior to the BLM placing a Federal seal, and another commenter requested that a reasonable time be given to bring the component into compliance prior to the BLM attaching a Federal seal. Other commenters said the BLM should not be sealing or changing valves or any other production components without an operator's representative being present to witness the change. Commenters recommended that the BLM give notice to the operator as to why the seal was placed, and the procedure for removing the seal.

The BLM did not change the final rule in response to these comments because the only violations that would cause the BLM to place a Federal seal on valves or production equipment would be those that are considered major, as defined in 43 CFR 3160.0-5 – that is, noncompliance actions that could cause or threaten immediate, substantial, and adverse impacts on health and safety, the environment, production accountability, or royalty income. Since the seal requirements in §§ 3173.2 or 3173.3 of this final rule were put in place to ensure that tampering does not occur, the BLM generally believes these incidents of noncompliance constitute major violations.

However, the BLM believes that some of the commenters' concerns have merit, and will ensure that its Inspection and Enforcement Handbook provides clear guidance to BLM inspectors that: They must not change the position of a valve or component; the Federal seal must be attached to the valve or component as found; and each Federal seal

installed must have a card attached that identifies it as a Federal seal, and advises that the removal or violation of the seal without approval by the AO will result in an immediate assessment of $1,000. The name and telephone number of the AO will be shown on the card. In addition, the operator will also receive notice in the form of an INC that will address all the violations associated with the Federal seal that the operator must correct prior to removal of the seal. The BLM did not make any changes to the final rule in response to this comment.

Section 3173.5 Removing production from tanks for sale and transportation by truck

Section 3173.5, paragraphs (a) and (b), of the final rule make clear that, at the completion of either a single or a multiple truckload sale, the driver of the load(s) must possess all the information that is required in § 3174.12. Under paragraph (c), once the seals are broken, the purchaser or transporter is responsible for the entire contents of a tank until it is resealed.

The BLM received a comment asking us to delay this final rule until we publish and make available for public comment two related rulemakings that will replace Orders 4 (subpart 3174) and 5 (subpart 3175). The commenter noted that § 3173.5(a) and (b) require truck drivers to possess certain information after oil sales, but the information will be set forth in § 3174.12, which was proposed in the separate Order 4. The BLM recognizes the commenter's concern, at least as it relates to the proposed rule to replace Order 4, which is why the comment period for this proposed rule was extended from its original September 11, 2015, closure date until December 14, 2015, to ensure there was sufficient overlap between the comment periods for the proposed rules for subparts 3173, 3174, and 3175. This overlap gave operators an opportunity to review the parts of

proposed subpart 3174 that were referenced in § 3173.5. This comment did not result in any changes to the final rule.

Several commenters expressed concern with language in paragraph (c) that makes the purchaser or transporter responsible for the entire contents of the oil tank from the time that the seals are broken until it is resealed. The requirements in paragraph (c) are taken directly from Order 3 with one minor modification. Under section III.C.1.c of Order 3, only the "purchaser" is responsible for the entire contents of the unsealed tank during a sale. The commenters stated that § 3173.5(c) would be a burden on transporters because it will cost them time and money to wait on-site for tanks to be resealed by the facility's operator after an oil sale. The BLM disagrees with this comment. It is standard practice for transporters, whether or not they are the purchasers, to remove and replace seals without the operator's representative being on location. Transporters do this because it protects them from liability if, subsequently, produced oil cannot be accounted for. No changes were made to the final rule as a result of this comment.

Section 3173.6 Water-draining operations

Section 3173.6 of the final rule requires the operator, purchaser, or transporter, as appropriate, to record specific information when water is drained from tanks that hold hydrocarbons, including the total observed volume (TOV) and free water that are in the tank before, and TOV after, water is drained. Order 3 did not require operators to record these volumes, which could have led to hydrocarbons being drained with the water and removed without proper measurement and accounting, and without royalties being paid.

The BLM received many comments regarding this section. Several commenters stated that the documentation requirements were excessive and added little to no value to

accounting for production. The BLM made several changes in response to these comments, to reduce documentation requirements and eliminate any confusion over when operators should document the FMP number during water-draining operations. Specifically, the BLM reduced the overall amount of information that operators must document by eliminating from this section the requirements that operators record the opening and closing gauge times, the name of the person and company draining the tank, and the FMP number associated with the tank.

Another commenter questioned whether the requirement to identify the FMP associated with a tank subject to this provision would mean that an FMP is required for each condensate tank in the field. By way of clarification, condensate tanks, just like oil storage tanks, must have FMP numbers. However, oil and condensate tanks that are part of a tank battery share the same FMP number

Another commenter recommended that the BLM exempt "low-volume sources" from the requirements, to reduce the paperwork and record-maintenance costs for operators of such sources. The BLM does not believe that an exemption for small producers (or operators of low-volume sources) is appropriate and did not change the final rule as a result of this comment. As noted earlier, it is important for all operators to ensure that hydrocarbons are not being drained with the water and removed without proper measurement and accounting, and without the royalties due being paid. Having operators record the volume of hydrocarbons that are in the tank before and after water is drained helps ensure that the proper royalties are paid. When performing production accountability inspections, the BLM will compare these water-draining records, along with other production and sales records, with production reports that operators submit to

ONRR. These records will allow the BLM to independently verify production that is attributable to Federal and Indian leases. The BLM did not make any changes in response to this comment.

One commenter said the existing Order 3 seal requirements already prevent theft of oil because they provide a tracking mechanism for the transfer of any liquids from production tanks, and therefore the provisions of the proposed rule were unnecessary. The BLM disagrees that Order 3's seal requirements already prevent theft of oil. Existing requirements related to seal records do not provide any information on how much TOV is in a tank before and after water is drained. They merely show when a tank is sealed and unsealed, and by whom, not what was drained, nor how much was removed from the tank. No changes were made to the final rule as a result of this comment.

Other commenters stated that § 3173.6 would require the gauging of tanks prior to and after a sale. They said that while such a practice is necessary during custody transfer, this requirement could be hazardous to employees because it would unnecessarily expose them to benzene or volatile organic compounds (VOC). In response to these comments, the BLM added new language to paragraphs (e) and (g) that allows either manual or automatic gauging for the opening and closing gauge, TOV, and free-water measurements, all of which must be to the nearest ½ inch. Giving operators the option of conducting this measurements using automatic gauging will provide an opportunity for operators to reduce employees' exposure in the field

Finally, one commenter said the color-cut measurement method requirement in the proposed rule is not accurate for indicating water oil contact with heavy oils that are less than 30 degrees gravity. The commenter said that an opening and closing gauge would

be a sufficient indicator to determine the amount of water in the tank. The BLM agrees with the comment that color-cut measurements are not accurate in some situations and has removed this requirement from the final rule. Instead, paragraph (e) has been rewritten to require operators to simply document "free-water measurements," which allows operators to use any reliable method for measuring free water, including electronic equipment.

Section 3173.7 Hot oiling, clean-up, and completion operations

Section 3173.7(a) of the final rule requires that specific information be recorded when hydrocarbons are removed from storage and used on the lease, unit PA, or CA for hot oiling, clean-up, and completion operations, including the volume of hydrocarbons removed from storage and expected to be returned to storage. Paragraph (b) requires operators to consider as sold, and to measure following the requirements of this final rule, any production used from storage for hot oiling, line flushing, or completion operations on a different lease, unit PA, or CA.

Under Order 3, the operator was required to record only the date, seal number removed, new seal number installed, and the reason for removing oil for hot-oiling, clean-up, or completion operations. The operator was not required to record the volume of hydrocarbons that was removed from storage and were expected to be returned. This omission could have led to the volume of produced hydrocarbons being counted twice – first when it was initially produced then later after it was returned to storage.

The BLM received many comments on this requirement. A few commenters said that an operator's field personnel are on hand, closely monitoring these types of operations, ensuring that the oil is returned to the tank and that it is counted just once. Commenters

said there is no reason for the BLM to require operators to maintain records of these volumes because operators only pay royalties on oil that is sold, not oil that is produced, and hot-oiling, clean-up, and completion operations are unrelated to sales. The BLM agrees that having an operator's field personnel on hand, closely monitoring these operations, is ideal for ensuring that oil is not counted twice during these operations. However, the BLM's experience has shown that in many instances field personnel do not monitor these operations because they are called away for other duties. The BLM did not change the final rule in response to this comment, because the BLM believes there is a need to address inconsistent practices among operators and to ensure there is proper documentation of the volume of oil used in these operations.

In response to the comment that hot oiling, clean-up, and completion operations have nothing to do with sales volumes, the BLM notes that it is required to verify not only sales volumes but also production volumes and to report on avoidably lost gas under NTL-4A. Hot oiling, clean-up, and completion all involve production volumes, and therefore are properly within the scope of the proposed rule.

Another commenter said the BLM does not have the authority to impose the requirements under this section, requested that the BLM explain why these new requirements are necessary, and asked that we provide the legal citation for the new law that justifies this authority. The BLM's authority to impose site-security, record-keeping, and production accountability requirements for the production of Federal and Indian oil and gas is not "new." The statutes authorizing the BLM to issue this rule have been in place for decades and were identified earlier in this preamble. These statutes include the ones that were identified as the basis for existing Order 3.

A few commenters said that the requirement that operators gauge oil level, maintain seals, track FMPs, gauge tanks, etc., during completion operations will add to the workload of field personnel performing those tasks. For example, an employee will need to be onsite 24 hours a day, 7 days a week to make sure the seal changes are recorded on the run tickets and logged properly for tracking purposes. Several commenters said the documentation requirements under this section were excessive and added little to no value to production accounting.

The BLM agrees with these commenters that the proposed documentation requirements were too expansive and in response changed the final rule to reduce the amount of information that operators must document during hot oiling, clean-up, and completion operations. In the final rule, the BLM removed requirements that operators document the opening and closing gauge times; the name of person and company removing production from the tank; and the FMP number associated with the tank or group of tanks. The BLM has accounted for the costs of these revised recordkeeping requirements in its Paperwork Reduction Act analysis, which we discuss later in this preamble, and concludes that they are not a significant financial burden on operators.

With respect to the general concern that these requirements are unnecessary, the BLM does not agree. These requirements are important and represent an important part of the final rule, because in their absence, operators could drain, transfer, or sell hydrocarbons without measuring and accounting for them during hot oiling, clean-up, and completion operations, resulting in incorrect royalties being paid. The BLM will use these records when performing production accountability inspections. Specifically, it will compare records from hot oiling, clean-up and completion operations, and other production and

sales records, with reports that operators submit to ONRR. This will allow the BLM to independently verify production that is attributable to Federal and Indian leases.

As for the commenter's claim that these recordkeeping requirements for well completion operations would necessitate an operator's field personnel to be present at the wellsite 24/7, the BLM does not have enough information to respond to this comment. While the BLM agrees that, in general, operators will now have to document more information than they have been documenting under Order 3, the BLM does not believe that any of these additional recordkeeping requirements will require company personnel to be onsite 24/7. The final rule was not changed as a result of this comment.

The BLM did not receive any comments on paragraph (b). However, the BLM makes a clarification in the final rule that the production reported to ONRR as sold must be "for the period covering the production in question."

Section 3173.8 Report of theft or mishandling of production

Section 3173.8 of the final rule includes security provisions that are intended to prevent theft or mishandling of oil, complementing the minimum standards for site security and production handling established in this rule. Paragraph (a) requires operators, transporters, and purchasers to report verbally all incidents of theft and mishandling of production to the BLM no later than the next business day after they or their employees discover them. Paragraph (b) specifies the information that must be included in a written incident report, which is required within 10 business days of any oral report. Such reports must be made the next business day after discovery and may be made orally or through a "written incident report." Oral reports must be followed by written reports within 10 business days. Adding purchasers and transporters to these

requirements is a change from Order 3, which required only operators to report theft or production mishandling, but is consistent with the overall approach to these requirements in the proposed and final rules.

Many commenters were concerned about the requirement in paragraph (a) that purchasers and transporters report incidents of theft and mishandling to the BLM, and questioned the BLM's authority to impose such a requirement on them. Since the wells and facilities belong to the operator, commenters said, the operator should be the one reporting all theft and production mishandling. The commenters said it would be redundant and unnecessary to have purchasers and transporters reporting theft and mishandling to the BLM, and could lead to multiple reports and confusion. A few commenters added that this change could make operators accountable for potentially arbitrary and inaccurate third-party reports of theft or production mishandling.

Finally, some commenters asked why operators could be subject to an immediate assessment when they fail to report theft or mishandling to the BLM.

The BLM believes it is necessary to require purchaser and transporters, in addition to operators, to report instances of theft or production mishandling when they discover them because, as noted in the proposed rule preamble, purchases and transporters are sometimes the first to discover such instances or to recognize suspicious activity. When transporters or purchasers report theft or production mishandling, the BLM intends to work with transporters, purchasers, and operators to verify the reports, with each party being responsible for the information it provides. The BLM's authority to require purchasers and transporters to report theft or production mishandling comes from Section 103(a) of FOGRMA, which provides that "a lessee, operator, or other person directly

involved in developing, producing, transporting, purchasing, or selling oil or gas…shall establish and maintain any records, make any reports, and provide any information that the Secretary may, by rule, reasonably require for the purposes of implementing this Act or determining compliance with rules or orders under this Act." Sections 102(b)(2) and 301(a) of FOGRMA allow the BLM to prescribe any rules, regulations, or appropriate measures to protect oil from theft. The final rule simply places the same expectations on purchasers, transporters, and operators, which are all parties involved in production, for reporting theft and mishandling of production.

The BLM does not agree that requiring purchasers and transporters to report theft and production mishandling creates confusion or is redundant and unnecessary. Reports by purchasers and transporters, together with information provided by operators, will improve the existing reporting system by giving the BLM more facts faster to investigate these situations. No changes were made to the final rule as a result of these comments.

Other commenters discussing the provisions of the proposed rule related to theft or mishandling did not agree with the BLM's decision to eliminate the self-inspection requirements contained in Order 3 section III.F, which are related to Order 3's requirements for reporting theft or mishandling of oil. The purpose of the self-inspection requirement, according to those commenters, was for operators to periodically measure production volumes to assure that they complied with the BLM's minimum site security requirements. These commenters said that self-inspection programs are a good practice, and that it would not be appropriate for the BLM to find an operator in violation of this section if they elect to implement a self-inspection program and report incidences of theft

and mishandling. The commenters encouraged the BLM to maintain the Order 3 requirements for a self-inspection compliance program, rather than eliminate them.

It has been impractical for the BLM to enforce the Order 3 self-inspection requirements because the requirements were vague, and the BLM never supplemented them with internal guidance or enforcement policy. This final rule replaces the Order 3 self-inspection program with stronger recordkeeping and documentation requirements, such as those in § 3173.9 (Required recordkeeping for inventory and seal records). As explained in the recordkeeping section of this preamble, we believe this approach will ultimately improve overall production verification and accountability. That said, the BLM does not disagree with the notion that self-inspection programs can help with a company's internal compliance efforts, and nothing in the final rule would prohibit a company from implementing such a program on its own initiative. No changes were made in response to this comment.

As for the commenters' suggestion that the BLM not issue immediate assessments or take enforcement actions against those operators who are implementing a self-inspection program, the BLM does not agree with this suggestion. The BLM takes enforcement actions against operators that fail to report theft or production mishandling. The fact that an operator has a self-inspection plan in place does not and should not immunize the operator from enforcement for a failure to report. Under the final rule, consistent with the proposed rule, an operator that fails to report is subject to an immediate assessment under § 3173.29 (Immediate Assessments) of the final rule. No change was made in response to this comment.

Finally, a number of commenters suggested that the BLM should be told whether

incidents of theft or production mishandling have also been reported to law enforcement and company security in addition to the BLM. The BLM agrees that it needs to know if law enforcement and company security have been notified and added a new paragraph (b)(8), which now includes this requirement. This change will help the BLM work with company security and law enforcement to investigate and prosecute alleged incidents of theft and production mishandling in order to prevent future occurrences.

Section 3173.9 Required recordkeeping for inventory and seal records

Paragraph (a) of this section of the final rule requires operators to perform an end-of-month inventory consisting of the TOV in storage (measured to the nearest 1/2 inch), subtracting free water, and the volume not corrected for temperature/S&W, as reported to ONRR on the OGOR. Paragraph (b) specifies the records that an operator must maintain for each seal.

The BLM received several comments on proposed § 3173.9. In the proposed rule, operators were simply required to measure and record the TOV in storage at the end of each calendar month. A few commenters said they did not have the ability to measure inventory at all sites on the actual last day of the month due to the number of tanks they operate, the volume corrections for temperature/S&W, and the accuracy needed to meet the measurement standards of this section.

The BLM agrees that operators may not be able to measure all inventory on the very last day of the month, especially those operators who have large numbers of storage tanks. In response, the final rule provides two options for an operator to perform an end-of-month inventory. The operator can either perform the measurements within +/- 3 days of the end of the month, or it can interpolate the values based on daily production values

and gross sales volumes, using inventory measurements taken before and after the final day of the month. To help guide operators on the interpolation of their end-of-month inventories, the BLM provides the following equation in paragraph (b)(2) of this section, as well as an example of how the equation is to be applied:

$$\{[(X + Y - W) / Z1] * Z2\} + X = A,$$

where:

A = calculated end of month inventory;

W = first inventory measurement;

X = second inventory measurement;

Y = gross sales volume between the first and second inventory;

Z1 = number of actual days produced between the first and second inventory; and

Z2 = number of actual days produced between the second inventory and end of calendar month for which the OGOR report is due.

These alternate approaches to maintaining inventories give operators more flexibility to meet the BLM's recordkeeping requirements, but still ensure monthly volume measurements are recorded.

Other commenters interpreted the proposed section to mean that operators were required to gauge their storage tanks manually, since at the time the proposed rule was released the BLM's oil measurement regulations did not allow operators to use automatic tank gauging systems. As a result, these commenters asserted that requiring operators to manually gauge tanks would unnecessarily expose their employees to hazardous fumes. The BLM understands this concern and has added clarifying language to the final rule that allows operators to measure TOV either manually or with automated systems. The

BLM was able to make this change because in the related rulemaking that is replacing Order 4 with a new subpart 3174, operators now have the ability to use automatic tank gauging systems for oil sales, and thus such a system will also be permissible for inventory maintenance.

Other commenters said this section was not necessary because recording the TOV in tanks is routine practice under sales contracts, and the seal requirements in paragraph (b) of this section are unnecessary because they are already covered in §§ 3173.2 and 3173.3 of the proposed rules. With respect to those comments stating that recording the tank TOV is routine operator practice under sales contracts, it should be noted that those recordkeeping activities relate to periodic tank sales. Those records do not allow the BLM or the operator to determine monthly production or to detect theft or improper handling of production like an end-of-month inventory does. Additionally, operators are already required to report end-of-month inventories to ONRR so this requirement should not create an additional burden for operators. The BLM did not change the final rule in response to this comment.

With respect to the concerns about paragraph (b), the BLM disagrees that the seal recordkeeping requirements are already covered in §§ 3173.2 and 3173.3. Those two sections only identify which valves or components must be sealed. They do not address the recordkeeping requirements associated with such seals. The BLM did not change the final rule in response to this comment.

Finally, some commenters asserted that paragraph (b) should not apply to purchasers and transporters because they are not responsible for installing or maintaining such seals. The BLM agrees that § 3173.9, particularly paragraph (b), does not apply to purchasers

and transporters. However, the BLM did not change the rule in response to this comment because the text in § 3173.9 makes clear that its requirements apply solely to operators.

Section 3173.10 Form 3160-5, Sundry Notices and Reports on Wells

Section 3173.10, paragraphs (a) and (b), require all parties involved in Federal and Indian oil and gas production to submit Sundry Notices, Form 3160-5, electronically to the BLM for their site facility diagrams, requests for FMP designations, requests for CAAs, requests for off-lease measurement, and any amendments to the diagrams or requests. As noted in the preamble of the proposed rule, requiring electronic submission will, in the long run, increase efficiencies throughout BLM field offices, for both the BLM and operators, by making the diagrams easier to track and more accessible to inspectors in the field. Paragraph (b) provides an exemption from the electronic-filing requirement for small operators that do not have access to the Internet.

Several commenters supported the proposed requirements for online filing, but were concerned with the BLM's ability to handle a significant increase in electronic submissions “at one time,” and wanted the BLM to clarify what it means when it says that this change will, in the long run, increase BLM efficiencies. Some of these same commenters said they were concerned with the ability of the BLM's existing WIS to handle this volume of submissions.

Requiring electronic submission of Sundry Notices and Reports on wells provides both operators and the BLM with an efficient chronological method for tracking items submitted for approval, rather than relying on hard copies. The BLM is aware that the Well Information System has had problems in the past, and is working on an improved version of its in-house database, known as AFMSS II. As part of its transition to AFMSS

II, the BLM is evaluating industry information technology standards, such as XML, to develop a system that will make data sharing and management as seamless as possible between the BLM and the public. That said, even the existing system should not prevent the BLM from realizing the benefits of electronic filing of facility diagrams.

One of the reasons the proposed rule gave operators a phase-in period to apply for an FMP on existing leases, units, and CAs was to help the BLM avoid having to process a flood of Sundry Notices at one time. Under the proposed rule, operators would have applied for their FMP numbers over a 9- to 27-month period, starting on the effective date of the final rule, on a tiered scheduled based on production level, with the highest producing wells having the earliest required application date. As discussed later in this preamble, the final rule extends the phase-in periods for the FMP application process to 12, 24, and 36 months, based on production level thresholds that are similar to those in the proposed rule. This will give some operators up to 3 years after the effective date of this final rule to apply for an FMP for stand-alone leases, CAs, unit PAs and CAAs. If a stand-alone lease, unit PA, or CA has not produced for a year or more before the effective date of this final rule, the operator will not need to apply for an FMP until resuming production. The BLM believes that these changes will substantially reduce the number of electronic filings the BLM must process at any one time, reducing the risk that its systems lack the capacity to handle the submissions.

Similarly, and as explained below in connection with § 3173.11(d) and (e), the BLM has also modified the proposed rule's requirements for updated site facility diagrams. Instead of requiring all facilities to upgrade their diagrams with 30 days of receiving an FMP, as was suggested in the proposed rule, under the final rule site facility diagrams at

existing facilities will only have to be updated when or if the existing facility is modified (e.g., when equipment or wells are added or removed, when co-located facilities are added, or when there is a change in operator). This change reduces the overall number of Sundry Notice submissions associated with site facility diagrams and helps distribute notice submissions over time.

Some commenters wanted to know if the BLM will send out electronic notifications when it approves Sundry Notices that have been filed electronically. The BLM will provide such notifications, just as it does now as part of its new APD system.

One commenter suggested that the BLM use off-the-shelf software common to industry to handle its electronic data submissions, saying it would reduce reporting costs to industry since these programs are already used industry-wide. The BLM disagrees because the BLM already has an existing e-filing system up and running, and operators are already familiar with using it. This system allows operators to see the status of their submissions and provides them an electronic response of the AO's decision. The AFMSS II update builds on this existing infrastructure. The BLM did not change this final rule as a result of these comments.

Section 3173.11 Site facility diagrams

As discussed in the proposed rule, the requirements in § 3171.11 update and replace Order 3's Site Facility Diagram requirements, which are currently found in section III. I. Paragraphs (a) through (c) of § 3171.11 set forth the requirements for the content and format of site facility diagrams, while Appendix A to subpart 3173 provides some basic examples of what these diagrams should look like.

Under § 3173.11(a) through (c), a site facility diagrams must include, in addition to drawings that show the relative locations of equipment, specific information, such as FMP numbers; the land description; unit PA, or CA numbers; site equipment; and royalty-free use information. Site facility diagrams are one of the BLM's primary mechanisms for ensuring that operators are complying with measurement regulations and policy, which is why it is important that accurate diagrams are submitted to the BLM in a timely manner.

As explained in the preamble to the proposed rule, under Order 3 the BLM required operators to provide generalized diagrams showing each piece of equipment being used at a facility, including connections between each piece of equipment, valve positions on production storage tanks (sales valves, drain valves, equalizers, and overflow valves), and their relative positions to each other. While these diagrams were useful to the BLM, they did not provide all of the information necessary for inspection and enforcement activities. The more detailed information required by this final rule will provide the BLM with a more useful tool to achieve improved production accountability.

For example, the requirement in paragraph (c)(9) of this final rule (paragraph (c)(10) in the proposed rule) will allow the BLM, for the first time, to verify royalty-free-use volumes that operators report on their OGORs. This paragraph requires operators to specify on their site facility diagrams which equipment on the lease is using oil or gas royalty-free and how they determine the volumes of oil or gas used by that equipment, if the volume is not measured. This requirement will provide greater consistency in how operators determine the volumes of oil and gas used royalty-free, and will enable the BLM to more easily verify those volumes, which enhances production accountability.

This particular change also responds to the GAO recommendations (Report 10-313) that the BLM establish uniform systems for collecting and tracking information about royalty-free use in order to ensure that such use can be properly verified. Affirmatively requiring this information to be reported on a site facility diagram will ultimately save the BLM and operator time because it will eliminate the need for the BLM to obtain the information in connection with a production accountability review.

Paragraph (d) sets forth the timeframe within which facilities that are required to obtain an FMP under § 3173.12 must submit a site facility diagram that complies with this rule. It covers both existing and new facilities. Paragraph (d)(1) in this final rule (paragraph (c)(1) in the proposed rule) requires operators, whose facilities become operational on or after the effective date of this rule to submit their diagrams within 30 days after the BLM assigns their FMP. For operators of existing facilities that were in operation on or before the effective date of this rule, paragraph (d)(2) explains that such facilities are not initially required to submit an updated site facility diagram if they already have one on file with the BLM that meets the minimum requirements of Order 3. These operators are only required to submit an updated site facility diagram consistent with the requirements of this final rule if and when the operators modify their facilities, construct or modify a non-Federal facility located on their Federal lease or federally approved unit or communitized area, or if there is a change in operator.

Paragraph (e) sets forth the timeframe within which facilities that do not require FMP numbers under § 3173.12 (e.g., facilities that dispose of produced water) must submit a site facility diagram that complies with this rule. It covers both existing and new facilities. Paragraph (e)(1) requires operators of facilities that become operational after

this rule's effective date to submit their diagrams within 30 days after the facilities become operational. For operators of facilities in operation on or before the effective date of this rule that do not require an FMP, paragraph (e)(2) in this final rule explains that such facilities are not initially required to submit an updated site facility diagram if they already have one on file with the BLM that meet the minimum requirements of Order 3. These operators are only required to submit an updated site facility diagram consistent with the requirements of this final rule if and when the operators modify their facilities, construct or modify a non-Federal facility located on their Federal lease or federally approved unit or communitized area, or if there is a change in operator.

Paragraph (f) explains that operators of facilities required to have a site facility diagram have an ongoing obligation to update those diagrams within 30 days after the operator modifies its facilities, constructs or modifies a non-Federal facility located on the Federal lease or federally approved unit or communitized area, or if there is a change in operator.

The BLM received many comments on this section of the proposed rule. One commenter suggested that the BLM develop a database that allows operators to submit the information needed for site facility diagrams using a standard form. The commenter said any changes to a site facility diagram, along with other information, could be automatically and periodically submitted by operators, thus making the process of submitting and updating diagram information to the BLM effortless. The BLM recognizes the potential efficiencies provided by the commenter, but did not make any changes at this time because the BLM's WIS—which follows the Sundry Notice format—is currently the only method for electronic submission. At this time, that system

does not allow for submission along the lines suggested by the commenter. As result, the BLM will accept electronic records that contain the requested information on additional pages as long as they are submitted with the actual diagram on Form 3160-5 (Sundry Notices) and they follow the prescribed numbering format. The BLM did not change the final rule based on this comment.

Many commenters expressed concern that application of the proposed rule's site facility diagram requirements to existing facilities is unnecessary, and that the deadlines in the proposed rule for submitting the diagrams would be onerous. These commenters also said the demands in this section are so burdensome that they would cause operators to reconsider future development plans, after having invested money in complying with previous regulations.

Although the BLM believes the new site facility diagrams for existing facilities, including those that handle waste water, will allow the BLM to improve production accountability, the BLM also believes that commenters' concerns with the deadlines for submitting the new diagrams have merit. In response to these comments, and in an effort to reduce the number of diagrams that operators must initially submit to the BLM, we have revised paragraph (d)(2) (formerly paragraph (d) in the proposed rule) and added a new paragraph (e)(2) to the final rule which specifies that operators of existing facilities are not initially required to submit updated site diagrams, so long as they have a diagram on file that complies with the requirements of Order 3. As noted, these paragraphs require updates to existing diagrams only when facilities undergo changes. The BLM believes that this change addresses the identified concern, while ensuring that as these existing facilities undergo changes the agency will eventually receive site facility

diagrams that meet the requirements of § 3173.11. Although the existing site-facility diagrams are not as detailed, the BLM will continue to work off the diagrams that it has on file to perform its production accountability-related inspections on existing facilities, until such time as those diagrams are updated.

Other commenters questioned why it was necessary to provide a diagram for salt-water disposal facilities because, they said, these facilities are unrelated to actual oil and gas production operations. The BLM does not agree with this commenter. These diagrams are not a new requirement. Operators are already required to have site facility diagrams on file with the BLM for their water-disposal facilities; Order 3.III.I.1. requires diagrams for "all facilities." The BLM is responsible for accounting for all production, including water, not just oil and gas. No changes were made to the final rule as a result of these comments.

A few comments sought clarification on how to legibly depict multiple wells and headers, encompassing an area several miles in size, on a single sheet of 8-½ x 11 paper. The BLM did not change the final rule based on these comments because paragraph (b) in the proposed and paragraph (c)(1) in the final rule (paragraph (c)(2) in the proposed) already state that, while diagrams need to reflect equipment locations, they need not be to scale, and more than one page can be used, if necessary. The Appendix to subpart 3173 provides examples of multi-well submissions.

One commenter said the valve-positioning and labeling requirements in paragraph (c) and the examples in the Appendix would result in operators putting redundant information on the diagrams when multiple tanks, with similar valves that are operated similarly, are involved. The BLM did not make a change in response to this comment. The BLM cannot create a

single template that addresses how all site facility diagrams, for a myriad of field configurations, should be drawn. The Appendix examples are meant to be a starting point for operators. It is up to the operator to determine how best to identify valve positioning on paper, as long as the valves and their positions are identified, legible, and comprehensible as required in § 3173.11.

The BLM received several comments on the requirement in paragraph (c)(9) of the final rule (paragraph (c)(10) of the proposed rule) that operators identify on their diagrams any equipment that uses production royalty-free, and either the calculated or measured volumes that are used. Under the final rule, operators are permitted to use any method they want to determine their royalty-free use volume, as long as they show on the diagram how they determined it.

Several commenters pointed out that royalty-free fuel use fluctuates monthly, and one commenter even provided its method for determining "on lease use fuel gas." The commenter recommended that the BLM consider letting operators provide an average lease use fuel gas estimate and questioned the need for operators to report this information on their diagrams since on-lease fuel gas is already reported to the BLM. The BLM did not change the final rule in response to this comment. The commenter has confused BLM and ONRR requirements. Operators are required to report the volumes of fuel used royalty-free to power production equipment on a lease to ONRR, not the BLM. In order to enhance accountability, BLM field inspectors need to be able to independently verify royalty-free-use volumes reported to the ONRR, using the information in the diagrams pertaining to the equipment that uses the royalty-free oil and gas. Currently, the BLM has no method for determining whether the royalty-free use rate that operators

report on their OGORs is accurate. This new requirement enhances production accountability and responds to key recommendations made by the GAO (Report 10-313), as explained above.

A few commenters questioned the BLM's rationale for creating the new site-facility-diagram requirement, while eliminating the Order 3 requirement for site security plans, which some operators had established. The BLM agrees that these two requirements are related. The site-facility diagram was part of the larger site-security plan required in Order 3. As discussed earlier in this preamble, the Order 3 site-security plan's self-inspection requirements are not in the final rule. However, elements of the old site security plan requirements have been incorporated into this final rule at §§ 3170.4 (Prohibitions against by-pass and tampering), 3173.8 (Report of theft or mishandling of production), 3173.9 (Required recordkeeping for inventory and seal records), and 3173.11 (Site facility diagrams); and into the final rule that is replacing Order 4 at 43 CFR 3174.12 (Measurement tickets).

Many commenters questioned the need for operators to provide information and documentation on their site facility diagrams, as required under proposed § 3173.11, for what they consider to be extraneous equipment and components. Commenters offered to work with the BLM to create a pragmatic approach for allowing the BLM to verify royalty-free volumes and for operators to submit their diagrams within a sensible time. However, as proposed, many commenters saw this section as unnecessary and unreasonable overreach by the BLM, and a drain on resources for both operators and the agency, especially given that operators would need to track information on multiple components on numerous pieces of equipment across several locations. For example, one

commenter did not understand how putting equipment serial numbers, rated fuel use, and manufacturer information on a site facility diagram would help the BLM verify whether a reasonable determination was made on royalty-free use volumes reported to ONRR. Depending on their configuration, production facilities can have an extensive number of major components, and requiring operators to track down this information and report it on their diagrams would cause a hardship on many operators, commenters said.

Another commenter disagreed with the requirement in proposed paragraph (c)(11) that an operator or its representative include a signed certification statement on the diagram. This requirement is redundant and unnecessary, the commenter said, because existing statutes – 18 U.S.C. 1001 and 43 U.S.C. 1212 – already make it a crime for any person to knowingly and willfully make a false statement to the BLM.

The BLM agrees with these comments and in response has made changes to the final rule that reduce the information that must be submitted and expand the timeframe within which the submission must occur, including deleting paragraph (c)(11). The final rule will not require operators to include a signed certification statement as part of their site facility diagrams, because, as noted by a commenter, operators are responsible by law for ensuring the accuracy of the information in their diagrams. In response to comments questioning the requirement in paragraph (c)(10)(i) of the proposed rule, which directed operators to provide equipment serial numbers, rated fuel use, and manufacturer information on their site-facility diagrams, the BLM removed this requirement in paragraph (c)(10)(i) of the proposed rule from the final rule because the information, although useful in verifying whether equipment had been replaced, would not help the BLM verify that the royalty-free-use volumes reported to ONRR were accurate.

One commenter said that the requirement in paragraph (a), that operators submit a site facility diagram for each FMP, is cumbersome, particularly in cases where the FMP for oil facilities and gas facilities are on the same site. The commenter recommended that the BLM require a single FMP number for an entire facility at a single site in order make it simpler for operators, while providing the necessary information to the BLM. The BLM disagrees with this comment because the BLM's inspection verification process is based, in large part, on comparing production information that is reported to ONRR against information contained in a site facility diagram, and operators report their oil and gas production separately to ONRR. Having information on both types of facilities on one diagram could complicate and undermine the BLM's verification process. No change has been made to the rule based on this comment.

Many commenters were also very concerned with the cost to operators to comply with the proposed diagram requirement, particularly the costs of re-submitting all site facility diagrams within the proposed rule's 30-day submission deadline. However, as discussed above and in greater detail in the Economic and Threshold Analysis, the final rule greatly scales back the range of circumstances in which operators of existing operations must submit new site-facility diagrams. This reduces the number of diagrams that must be prepared and the amount of information that operators need to provide on those diagrams, which will significantly reduce compliance costs. The BLM estimated in the proposed rule that it would take operators 8 hours to prepare and submit a revised diagram. The BLM now believes that with the reduced workload, operators can perform this task in 6 hours. The BLM originally estimated in the proposed rule that operators would submit revised diagrams for 125,000 existing facilities over a 27-month phase-in period. After

taking a more detailed look at our computer data, the BLM has revised downward its estimate of the number of existing facilities to 83,116. The BLM now estimates under this final rule's revised requirements that only 5 percent of existing facilities, or about 4,165 facilities, do not have accurate and up-to-date site facility diagrams on file with the BLM and will have to submit revised diagrams to the BLM over the 3-year phase-in period. The BLM now estimates that the total one-time cost to industry to submit revised site facility diagrams will be $1.6 million, spread over 3 years, down from the BLM's previous estimate in the proposed rule of $63.6 million. On an ongoing basis, the BLM estimates operators will submit about 5,000 new diagrams per year for a total annual cost to the regulated community of $1.9 million.

Other commenters said they were physically limited – by the sizes of their staff and facilities – from submitting site facility diagrams for multiple existing and new facilities within 30 days of receiving their new FMP numbers. Commenters said carrying out such a labor-intensive effort within 30 days of receiving an FMP number was impractical, unreasonable, and a burden. Some comments suggested that a 60- to 90-day timeframe was more realistic. One commenter suggested 180 days would be more reasonable, with a couple of others suggesting that operators have up to 1 year to complete the diagrams. Another commenter proposed that the BLM set a 30-day deadline for new facilities to submit their diagrams that would start from the date of first production, while another suggested a phase-in process, and still another comment proposed diagrams for new facilities only.

The BLM agrees that operators need more time to submit diagrams for new and existing facilities, and made corresponding changes to the final rule. The commenter

misstated the requirement of the proposed rule, which would have required operators to submit their diagrams much earlier – within 30 days of completing construction of their facilities. Under the final rule, operators will need to submit diagrams for new facilities (those that become operational on or after the effective date of this final rule) within 30 days after the BLM assigns an FMP to those facilities. The BLM believes these changes ensures that it will not receive a site facility diagram for a new facility prior to having assigned that facility an FMP number, which means operators will not have to go back and subsequently revise their diagrams to reflect the new FMP numbers. As discussed earlier, under the final rule, operators of existing facilities that already have site facility diagrams on file with the BLM that meet the requirements of Order 3 do not have to revise those diagrams unless they modify their facilities or there is a change in operator.

Finally, one commenter was concerned about having to submit and resubmit multiple site facility diagrams for a facility with multiple FMPs, if the FMPs were not approved within 30 days of each other. The commenter said compliance would be impossible under these circumstances. The BLM believes that this commenter was trying to describe a well pad with multiple wells that are coming in to production consecutively. In this case, the FMP numbers will not change, but a new site-facility diagram will be required within 30 days from the onset of production from each well to reflect the new facility coming online. The BLM did not change the final rule in response to this comment. With respect to the commenter's concern about facilities having multiple FMPs, for the most part, facilities will have no more than two FMPs—one for oil and one for gas. Even though the applications for each FMP number will be submitted under a separate Sundry Notices, there is no reason an operator could not submit them at the same time, nor for

the BLM to assign the FMP numbers at different times, as it is unlikely that the measurement system for oil would come online later than the measurement system for gas.

Section 3173.12 Applying for a Facility Measurement Point

Section 3173.12 of the final rule establishes a formal nationwide process for designating and approving the point at which oil or gas must be measured for the purpose of determining royalty. Prior to this final rule, the BLM did not have a formal, written process for designating measurement points on the leases it manages. While some Field Offices had their own internal policies for establishing these points, this lack of uniform guidance across Field Offices resulted in instances of confusion about the location of royalty measurement points, which interfered with the BLM's production verification process. This section now requires operators to obtain BLM approval of FMPs for all measurement points used to determine royalties.

The BLM will approve an FMP that meets the requirements of this final rule (the most important elements of which are the identification of the wells associated with the FMP and the measurement method). The BLM will assign each FMP a unique identifying number, which the operator, transporter, or purchaser will use when reporting production results to ONRR. Each FMP number will be 11 digits long. The first two digits (ranging from 52 to 99) will identify the product--oil or gas--as well as other information, such as whether the FMP is on-lease or off-lease, whether it is part of a commingling arrangement, and the measurement method used at the FMP – tank gauge, LACT, Coriolis, etc. The next 5 digits will represent the American Petroleum Institute (API)

state and county code, while the last 4 digits will be a combination of letters or numbers that will make each FMP number unique.

The BSEE already assigns similar FMP numbers for the offshore oil and gas leases that it manages, which the operator, transporter, or purchaser must then use when reporting production results to ONRR. The changes in this final rule will make BLM practices consistent with existing BSEE and ONRR practices for production reporting.

Paragraph (a)(1) of this final section provides that, unless otherwise approved, the FMPs for all Federal or Indian leases, unit PAs, or CAs must be located within the boundaries of the lease, unit PA, or communitized area from which the production originated, and must measure only production from that lease, unit PA, or communitized area, unless otherwise approved. Paragraph (a)(2) provides that off-lease measurement or commingling and allocation of production requires prior approval under 43 CFR 3162.7-2 and 3162.7-3, and §§ 3173.15, 3173.16, 3173.24, and 3173.25 of this final rule.

Paragraph (b) provides that the BLM will not approve a meter at the tailgate of a gas processing plant located off the lease, unit, or communitized area as an FMP. This paragraph codifies existing BLM practice with respect to tailgate meters.

Paragraph (c) provides that the operator must submit separate applications for approval of separate FMP numbers for a measurement point that measures oil produced from a particular lease, unit PA, CA, or pursuant to an approved CAA, and a measurement point that measures gas produced from the same lease, unit PA, or CA, or pursuant to an approved CAA. The requirements for a separate FMP apply even if the measurement equipment or facilities are at the same location. As discussed earlier, the first two numbers in the FMP number specify whether the FMP measures oil or gas. The BLM

will not approve the same FMP number for a facility that measures oil and a facility that measures gas.

Paragraph (d) requires the operator to apply for approval of an FMP for a new permanent measurement facility (i.e., one coming into service after the effective date of the final rule) before any production leaves the facility. In the final rule, we clarify that this requirement does not apply to temporary measurement equipment used during well-testing operations. Until the BLM assigns the FMP number, the operator must use the lease, unit PA, or CA number for reporting production to ONRR.

Paragraph (e) provides that for existing permanent production measurement facilities, an operator has 1 year, 2 years or 3 years from the effective date of the final rule within which to apply for BLM approval of its FMP, depending on the production level of the lease, unit PA, or CA that the measurement facility serves. The prescribed application deadline applies to both oil and gas measurement facilities measuring production from that lease, unit PA, and CA, whether or not it is part of a CAA. The final rule requires FMP applications for existing measurement facilities that serve operations with the highest production volumes to be submitted first:

1. Under paragraph (e)(1), operators of stand-alone leases, unit PAs, or CAs, which produce 10,000 Mcf or more of gas per month, or 100 bbl or more of oil per month must, apply for FMP approval within 1 year after the effective date of the final rule.
2. Paragraph (e)(2) requires operators of stand-alone leases, unit PAs, or CAs, which produce 1,500 Mcf or more but less than 10,000 Mcf of gas per month, or 10 bbl

or more but less than 100 bbl of oil per month, to apply for FMP approval within 2 years after the effective date of the final rule.

3. Paragraph (e)(3) requires operators of stand-alone leases, unit PAs, or CAs that produce less than 1,500 Mcf of gas per month, or less than 10 bbl of oil per month, to apply for FMP approval within 3 years after the effective date of the final rule.

To determine which category a facility is in, the final rule requires the facility to calculate average production over the 12 months preceding the effective date of the final rule, or over the period the lease, unit, CA, or CAA has been in production, whichever is shorter.

Paragraph (e)(4) explains that if a stand-alone lease, unit PA, or CA has not produced for a year or more before the effective date of this final rule, the operator is not required to apply for an FMP immediately, but rather need only apply prior to resuming production. Under paragraph (e)(6), if an operator applies for FMP approval by the date, the operator may continue to use the lease, unit PA, or CA number for reporting production to ONRR while the application is pending, until the effective date of the BLM-assigned FMP number, at which point the operator must use the FMP number for such reporting. If, however, an operator fails to apply for an FMP approval by the date required by the final rule, paragraph (e)(7) explains that the operator will be subject to an incident of noncompliance and may also be subject to an assessment of civil penalty under 43 CFR subpart 3163, together with any other remedy available under applicable law or regulation.

Paragraph (f) identifies the information that a request for FMP approval must include. Under paragraph (f)(1), FMP requests must be submitted on a Sundry Notice and include information pertaining to the equipment that will be used to measure the oil and gas. Paragraph (f)(2) requires the applicable Measurement Type Code specified in WIS. Paragraph (f)(3) requires information about the equipment used for oil and gas measurement: (i) For gas measurement, specify unique station number, primary element (meter tube) size or serial number, and type of secondary device (mechanical or electronic); (ii) For oil measurement by tank gauge, specify oil tank number or tank serial number and size in barrels or gallons for all tanks associated with measurement at an FMP; and (iii) For oil measurement by LACT or CMS, specify whether the equipment is LACT or CMS and the associated oil tank number or tank serial number and size in barrels or gallons (there may be more than one tank associated with an FMP). Paragraph (f)(4) requires operators to include a list of the API well numbers that will flow to the requested FMP if that FMP will serve more than one well, and provide a land description for the FMP location. Under paragraph (f)(5), the FMP location by land description must also be included in the FMP application.

As explained below, the BLM in the final rule has also reduced the quantity of information that operators must submit on their FMP number applications. For consistency with § 3173.10(c)(10)(i), the BLM removed requirements that operators provide component names, manufacturer, model, serial number, range limits for electronic flow computers, transducer (static, differential , and temperature), chart recorders, LACT totalizer, and Coriolis meter from § 3173.12(f)(3)(i), (ii), (iii), (iv) and combined subparagraphs (iii) and (iv) into (iii).

Paragraph (g) allows concurrent requests for FMP approval and for approval of off-lease measurement or commingling and allocation.

Section 3173.12 is a key element of the final rule as it implements one of the GAO's central recommendations: That the Interior Department consistently track where and how oil and gas are measured, including information about meter location, identification number, and owner. By requiring operators to obtain approval from the BLM for the location of the FMP at which oil or gas is measured, the final rule provides that consistent tracking. The BLM will also now tie the FMP numbers to other appropriate approvals and documentation that are part of its production verification and accountability efforts, such as site facility diagrams, off-lease measurement approvals, commingling approvals, and royalty-free use (if volumes used royalty-free are measured).

In the final rule, operators, purchasers, and transporters must include on all records the FMP number or until the BLM approves the FMP number, the lease, unit PA, or CA number, along with a unique equipment identifier and the name of the company that created the record.[12] Records include, but are not limited to, calibration reports, gas analysis, sales statements, manifests, seal records, and related approvals. Once assigned, the operator must use the FMP number for production reporting to ONRR after the effective date of the BLM's FMP approval.

The BLM estimates there are approximately 83,116 existing oil and gas facilities associated with Federal and Indian leases. Many facilities have one FMP for oil and one FMP for gas for a total of approximately 166,232 FMPs for existing facilities.

[12] Once an FMP number is approved, it must be used on all subsequent reporting as outlined in this rule.

In connection with its creation of the new FMP system in § 3173.12, the BLM has also revised its existing well and facility identification provisions at 43 CFR 3162.6(b) and (c) to include a signage requirement for wells on Federal or Indian lands and facilities at which Federal or Indian oil or gas is measured or processed. Additional revisions to § 3162.6 include: (1) Making the surveyed-location language in paragraphs (b) and (c) consistent, including a new reference to longitude and latitude; and (2) Removing a sentence in paragraph (b) that provided a grace period for well signs that were in existence on the effective date of the rulemaking in which that section was first promulgated.

The BLM received a comment requesting that the definition of an FMP in § 3173.1 include more details on how to obtain an FMP, the deadlines for operators to obtain an FMP, and the economic impacts that the FMP requirement would have on industry. The BLM disagrees with this commenter. Section 3173.12 of this final rule provides all of the information requested by the commenter related to requests to apply for an FMP. It addresses the deadlines—which are based on average production volumes—for operators to submit FMP applications for facilities that are in service on or before the effective date of this rule, or that will come into service after the effective date. It also specifies the three production thresholds on which the FMP application deadlines are based. As for the economic impacts, the BLM carefully evaluated those as part of the rulemaking process in both a draft and a final regulatory impact analysis for this rulemaking, both of which are made available to the public. The Procedural Matters section of this preamble contains a short discussion of this rule's potential economic impact on industry. We did not change the final rule as a result of this comment.

A number of commenters were concerned that they could not meet the proposed rule's deadlines in § 3173.12(e) for applying for and then receiving an FMP number before producing oil and gas. They said the resources needed to prepare FMP applications would be exorbitant, especially for large producers that have many thousands of wells, many of which will likely have associated commingling or off-lease measurement approvals that the BLM will need to review (see discussion of § 3173.16 below).

Many commenters also complained about the proposed tiered volume thresholds that figured into the timelines for filing FMP applications. Many operators said that most of their wells' production levels would require them to submit their FMP applications within 9 months of the final rule's effective date. Commenters said such timeframes would be unreasonably short for operators with large well inventories, considering that they would also be required to submit new site facility diagrams and possibly update existing commingling and off-lease measurement approvals.

Under the proposed rule, operators would have had to submit their FMP application within:

- Twenty seven months from the effective date of the final rule for leases, unit PAs, and CAs that produced less than 3,000 thousand cubic feet (Mcf) of gas or 20 bbl of oil per month;
- Eighteen months from the effective date of the final rule for leases, unit PAs, and CAs that produced between 3,000 and 6,000 Mcf of gas or 20 and 40 bbl of oil per month; and
- Nine months from the effective date of the final rule for leases, unit PAs, and CAs that produced over 6,000 Mcf of gas or 40 bbl of oil per month.

The BLM agrees with commenters that the proposed deadlines were too tight. In response, the BLM changed the final rule to give operators additional time to submit FMP applications for facilities that are in service before the effective date of the final rule. The amount of additional time is based on the facility's average reported monthly oil and gas production volumes over the previous 12 months. When establishing the new thresholds, the BLM analyzed lease production data in AFMSS to determine the impacts on all currently producing leases. In setting the FMP application deadlines, the BLM attempted to spread the impact evenly across the three timeframes and across all BLM-administered leases.

As discussed previously, the final rule also allows operators to continue to produce oil and gas while their FMP applications are pending BLM approval, provided that those applications are submitted within the deadlines specified in § 3173.12(e). While waiting for their FMP approvals, operators may continue to use the lease, unit PA, or CA numbers that they have been using for reporting their production to ONRR. These changes should make it easier for operators to meet the final rule's FMP application deadlines and give them more time to plan and budget for this new requirement, while continuing their production operations. As explained in connection with § 3173.11(d) and (e), this final rule removes the proposed rule's requirement that all existing facilities submit updated site facility diagrams within 30 days of approval of an FMP, further reducing requirements on existing facilities.

In addition, as discussed previously, the BLM changed the final rule to eliminate some of the information required in the FMP applications (e.g., equipment serial numbers and manufacturer information). Furthermore, the final rule exempts leases, unit PAs, and

CAs, which have not produced any oil or gas within the past 12 months. Only when operators resume production from these idle leases, unit PAs, and CAs must they then apply for FMPs.

A number of commenters also expressed concern that the BLM would not have been able to handle the number of FMP applications that the agency would have received under the proposed rule's timeline and requirements. However, the BLM now anticipates having a much smaller workload, spread more evenly over time. For one thing, a review of AFMSS data suggests that there are only 83,116 active facilities affected by this rule – about 25 percent fewer than the BLM had estimated in analyzing the proposed rule. In addition, the final rule requires operators to provide less information on their FMP applications and site facility diagrams than the proposed rule would have required. We now estimate that it will take BLM staff 2 hours to process each FMP application, instead of the 4 hours we anticipated under the proposed rule's information requirements. Additionally, because of the provisions allowing continued production and reporting while an FMP application is pending, operators should no longer be concerned about potential FMP application backlogs.

Several commenters said they were concerned about delays in the FMP approval process holding them up from putting new wells online and removing production from the lease. The proposed rule at § 3173.12(d) required operators to "obtain" FMP approval for measurement facilities that came into service after the rule's effective date before they could begin removing production from a lease, unit PA, CA, or CAA. The BLM agrees that proposed paragraph (d) needed to be changed to avoid production delays on new facilities. To address these concerns, the BLM has made several changes

to paragraph (d) in the final rule. First, the BLM added language to the section to clarify that operators must apply for FMP approvals for permanent measurement facilities only—not temporary test facilities—as defined in § 3173.1 of this final rule. In addition, the BLM added language to paragraph (d) that requires operators of new facilities to simply "apply for" FMP approval before any production leaves the permanent measurement facility. This change allows operators to install a new measurement facility, remove production from that facility without delay, and use the lease, unit PA, or CA number for production reporting to ONRR until the BLM assigned an FMP number, as long as they apply for their FMP approval before any production leaves that permanent facility. While the applications are pending, operators may continue using their lease, unit PA, or CA number for reporting production to ONRR.

One commenter thought the BLM should allow operators to file one application on the facility as a whole, and not be required to submit one application for oil and another for gas. The BLM did not revise the rule as a result of this comment. One of the purposes of an FMP is to be able to consistently verify where and how oil or gas is measured. The BLM does this by comparing information that operators report to the BLM against information operators report to ONRR, which does, in fact, collect the oil and gas production information separately. Using one FMP number to track oil and gas measurement operations together would compromise the BLM's ability to consistently verify production measurements for royalty purposes. Such a system is also incompatible with ONRR's existing reporting systems, and it would not meet the goals of establishing an FMP.

Finally, one commenter said that BLM staff should be given a deadline for approving FMPs, since it is not fair to hold operators to multiple deadlines, making them subject to INCs for missing those deadlines, while not holding the BLM to the same standard. As discussed above, the BLM's new FMP approval process will not interfere with operators' production. Once operators file a timely request for an FMP approval on existing facilities, they may continue to operate and use their lease, unit PA, or CA number for reporting production to ONRR until the BLM assigns an FMP number.

Once an FMP number is assigned to a facility, § 3173.13(a) of this final rule gives the operator several months before it must use the FMP number when reporting production to ONRR. Specifically, for existing facilities, the operator will have to begin using the FMP number for reporting production to ONRR on its OGOR for the fourth production month after the FMP number is assigned. For facilities that come into service after the effective date of this final rule, operators are required to apply for FMP approval before any production leaves the permanent measurement facility and then use the FMP number for reporting production to ONRR on its OGOR for the first production month after the FMP number is assigned. As result of these changes, we do not believe deadlines for BLM review are necessary or appropriate.

Section 3173.13 Requirements for approved facility measurement points

Section 3173.13 of the final rule sets forth the requirements that are applicable to all approved FMPs. Paragraph (a) requires the operator of an existing facility to use assigned FMP numbers in reporting production to ONRR on its OGORs for the fourth production month after an FMP is assigned. For new facilities in service after the effective date of this rule, paragraph (a) requires the operator to begin using its assigned

FMP numbers on its OGORs for the first production month after the FMP number is assigned.

Paragraph (b) requires an operator to file, within 30 days after any changes or modifications to an approved FMP, a Sundry Notice notifying the BLM of the change. It also describes the information that operators must provide to the BLM in the Sundry Notice, including any changes or modifications to the equipment that is used for measuring oil or gas at the FMP, or to the API well numbers associated with the FMP.

The BLM received several comments on this section of the proposed rule. Unlike the final rule, the proposed rule required operators to use their FMP numbers for both recordkeeping purposes and production reporting to ONRR beginning on the first day of the month after the FMP number was assigned. A few commenters said they needed more time to start using the number for production reporting and recordkeeping because an FMP could be issued on the last day of the month, thereby obligating the operator to use the FMP on the next day. The commenters said that this would not give them enough time to take the steps they need to comply with FMP requirements, such as stenciling the FMP number onto equipment, labeling all records with the FMP number, and making updates to their existing database systems that track oil and gas production operations.

The BLM agrees that requiring operators to begin using their FMP numbers for recordkeeping and production reporting on the first day of the month after the FMP number is assigned may not be possible for some operators. As discussed earlier, the BLM changed § 3170.7(g) from requiring operators to use FMP numbers on all records, to allowing operators to use either FMP numbers or lease, unit PA, or CA numbers, along with unique equipment identifiers, on their records. In addition, the BLM changed final §

3173.13(a) to extend the effective date that operators of existing facilities are required to begin using their FMP numbers in production reporting to ONRR. Under the final § 3173.13(a), operators must start using FMP numbers for reporting production to ONRR on their OGORs for the fourth production month after the FMP number is assigned. For example, if the BLM assigns an existing facility an FMP number on January 17, the operator must begin using that FMP number on its May production OGORs. Because ONRR requires operators to submit their electronic reports "on the 15th day of the second month following the production month being reported," the May production report must be submitted by July 15, effectively giving the operator 5-½ months of leeway before having to submit a report using the FMP number assigned on January 17. The BLM chose this new timeframe because it believes that nearly six months is ample time for operators of existing facilities to start using their new FMP numbers for reporting production to ONRR.

For new facilities, operators will be required to begin using their FMP numbers in reporting production to ONRR on their OGORs for the first production month after the FMP number is assigned. For example, if the BLM assigns the FMP number on April 30, the operator must begin using that FMP number for its May production. As noted, however, the May production report is not due to ONRR until July 15, effectively giving the operator 2-½ months leeway before having to submit the report using the FMP number.

Some commenters asked why proposed § 3173.13(d) required operators to submit a Sundry Notice detailing "any" modifications they make to an approved FMP and why the changes were made. Commenters said the BLM does not need this information. The

BLM agrees that it does not need to know why a change was made and has removed this requirement from the final rule. However, the BLM does need to know when operators change out measurement equipment at an approved FMP, along with specific information about the replacement equipment, and when they add or remove wells served by an FMP, along with the associated API well numbers. The BLM needs this information so that it can keep track of these types of changes, which directly impact the BLM's efforts to verify production. In addition, the BLM has provided some additional context, by clarifying that it does not need to be notified when temporary modifications (e.g., for maintenance purposes) are made. With these clarifications, the final rule in paragraph (b)(1) still requires operators to file a Sundry Notice within 30 days notifying the BLM of changes in measuring equipment at an approved FMP or of the addition or subtraction of wells served by an approved FMP. These are essentially changes in the information that operators submitted on their FMP applications, as required under § 3173.12(f)(3) and (4).

The BLM received several comments on the requirement in proposed § 3173.13(a) that operators stamp or stencil FMP numbers on specific pieces of equipment within 30 days after an FMP number assignment. Commenters said this requirement was too expensive and would take too much time. Several commenters recommended that the BLM, instead, cross-reference the FMP number to a unique meter station identifier supplied by the operator, such as the meter station number, LACT ID number, or tank number, all of which are already available and visible to BLM inspectors. The BLM agrees that the requirement to stamp or stencil FMP numbers on equipment that is used to measure for royalty is unnecessary and has removed it from the final rule.

The BLM changed the final rule at § 3173.12(f) to require operators, when they apply for a gas FMP number, to identify the royalty measurement point by specifying a unique station number; primary element (meter tube) size or serial number; type of secondary device (mechanical or electronic); and associated API well numbers where production from more than one well will flow to the requested FMP; along with a land description of the FMP's location. On an oil FMP number application, operators must supply the tank number or tank serial number and size in barrels or gallons; specify whether LACT or CMS, if applicable; associated API well numbers where production from more than one well will flow to the requested FMP; along with a land description of the FMP's location.

One commenter said operators should be exempt from the requirement that they file a Sundry Notice when they temporarily modify an FMP due to changing out equipment for maintenance. The commenter said the replacement equipment, using the same measurement methodology, would not impact accuracy. The BLM agrees that operators do not need to notify the BLM when they install temporary replacement equipment while performing maintenance on the permanent equipment. As noted, the final rule clarifies in paragraph (b)(1) that the BLM does not need to be notified when temporary modifications (e.g., for maintenance purposes) are made.

Finally, one commenter objected to the requirement in proposed paragraph (b)(2) that operators file a Sundry Notice whenever there is a change in the wells or facilities served by an FMP. This commenter said an operator may need to transfer product to different meters several times a day when the meters freeze during the winter months. The commenter said it would be impossible to maintain a list of the wells going to the FMPs under these conditions. The BLM is not aware of situations where operators direct their

gas stream to different sales meters because of line freezing. This practice may be allowed on State and private wells, but, such a transfer is not allowed on Federal and Indian wells. We did not change the final rule as a result of this comment.

Sections 3173.14 through 3173.21 Commingling and allocation approvals

As explained in the Definitions section of this preamble, commingling, for production accounting and reporting purposes, means the "combining, before the point of royalty measurement, production from more than one lease, unit PA, or CA, or production from one or more leases, unit PAs, or CAs with production from State, local governmental, or private properties that are outside the boundaries of those leases, unit Pas, or CAs." Operators apply for commingling approval for several reasons, including:

(1) It can simplify accounting to have the sales point be the same as the point of royalty measurement;

(2) Lower operating costs can be achieved by reducing the number of meters required (such as when well testing is an appropriate allocation method); and

(3) Lower operating costs can also be achieved by eliminating the need for separate plumbing and surface equipment (pipelines, separators, dehydrators, compressors, tanks, etc.).

Commingling can also have some advantages for the BLM:

(1) More accurate measurement can sometimes be achieved from a meter measuring combined flows, which can be better-conditioned and, more consistent, and have higher flow rates, than from a single low-volume meter measuring erratic flow with a higher potential for multiple phases of fluid;

(2) The environmental footprint can be reduced by reducing the need for duplicate surface equipment; and

(3) Production accounting can be simplified by reducing the number of meters to inspect and verify.

However, in many situations the advantages of commingling are offset by increased measurement uncertainty, increased potential for measurement bias, and a decrease in the BLM's ability to verify reported production volumes. This is especially true if the properties proposed for commingling are of different ownership, have different royalty rates, or have different royalty distributions.

As explained below, §§ 3173.14 through 3173.21 of the final rule restrict the instances in which the BLM will approve commingling and establish the standards that an operator must meet to obtain an approval. Existing regulations at 43 CFR 3162.7-2 and 3162.7-3 require BLM approval before operators commingle production from a Federal or Indian lease with production from other sources; however, prior to this rule, there were no regulations addressing how or under what circumstance commingling should be approved. The requirements in this final rule are based on and codify the policy outlined by the BLM with respect to commingling approvals in IM 2013-152 (2013), "Reviewing Requests for Surface and Downhole Commingling of Oil and Gas Produced from Federal and Indian Leases." The principal difference between the provisions of this rule and the BLM's existing IM is that the final rule establishes a new process for the BLM to review existing CAAs when operators apply for their FMP approvals. In contrast, the IM focused solely on new CAAs. Also, in response to public comment and additional internal reviews, the final rule expands the number of exemptions under which an

existing or proposed CAA could be commingled if the CAA does not meet the criteria identified in § 3173.14 (a) of the final rule.

<u>§ 3173.14 Conditions for Commingling and Allocation Approval (Surface and Downhole)</u>

§ 3174.14(a)

To ensure the accuracy and verifiability of the volume and quality measurements on which royalty is based, § 3173.14(a) states that the BLM "may grant a CAA only if the proposed allocation method used for any such commingled measurement does not have the potential to affect the determination of the total volume or quality of production on which royalty owed is determined for all the Federal or Indian leases, unit PAs, or CAs which are proposed for commingling…." Paragraph (a)(1) goes on to identify the conditions under which this occurs.

The most common situation when this occurs is when all the properties proposed for commingling are 100 percent Federal or leased 100 percent by the same Indian tribe, have the same fixed royalty rate, and have the same revenue distribution. In these situations, the allocation method is irrelevant because the total amount of royalty received by the Federal Government or tribal mineral interest owner will be the same regardless of how it is allocated to the individual leases, unit PAs, or CAs that are part of the CAA. Consequently, the BLM can ensure accurate measurement and proper reporting by inspecting and verifying only the commingled point of royalty measurement (i.e., the commingled FMP). This would also apply in situations where, for example, "lease-line" CAs proposed for commingling are all 50 percent Federal and 50 percent non-Federal.

Based on comments received on the proposed rule and additional internal reviews, the BLM revised paragraph (a) and its subparagraphs as outlined below. In paragraph (a) itself, the BLM added language which explicitly states the criteria the BLM uses to approve a commingling application. Paragraphs (a)(1)(i) and (a)(1)(ii) were retained, with modifications for clarity, from the proposed rule. Those provisions recognize that if the leases, unit PAs, or CAs to be commingled are 100 percent Federal or leased 100 percent by the same Indian tribe, and at the same fixed royalty rate, then commingling is generally acceptable, assuming the other requirements of this part are met. Indian allotted leases are not included under paragraph (a) because there would be virtually no instances where the revenue distribution to the allottees would be identical in different leases, unit PAs, or CAs.

Several commenters suggested that commingling among unit PAs or CAs that have less than 100 percent Federal ownership should be recognized as permissible, so long as they have the same proportion of Federal interest. The BLM agrees with this comment and added paragraph (a)(1)(iii) to allow commingling of Federal unit PAs or CAs where each unit PA or CA proposed for commingling has the same proportion of Federal interest, which is subject to the same fixed royalty rate and revenue distribution. Under this provision, the BLM could approve a commingling request where an operator proposes to commingle two Federal CAs of mixed ownership where both are 50 percent Federal/50 percent private, so long as the Federal interests have the same royalty rates and royalty distributions. The BLM also added a new paragraph (a)(1)(iv), which provides a parallel provision for tribal interests, with the key again being identical percentage of tribal participation and royalty rates.

In paragraph (a)(2) of the final rule, the BLM makes it clear that the operator or group of operators that are part of a CAA must provide the BLM with the allocation methodology for the properties from which production is to be commingled, along with an agreement signed by the operators that are parties to the CAA if there is more than one operator. Paragraphs (a)(3) and (a)(4) remain unchanged from the proposed rule.

Paragraph 3173.14(a)(3) requires operators to demonstrate that each of the leases, unit PAs, or CAs proposed for inclusion in a CAA is producing in paying quantities or, in the case of Federal leases, capable of producing in paying quantities. One commenter asked why the BLM wants to know that wells involved in commingling are capable of production in paying quantities. The purpose of this requirement is to ensure that CAAs are not used to extend the terms of a nonproducing lease, by allocating production to it. The BLM did not change the rule as a result of this comment.

Paragraph (a)(4) requires that the FMP(s) for the proposed CAA measure production originating exclusively from the leases, unit PAs, or communitized areas in the proposed CAA. The BLM received no comments on this provision.

§ 3173.14(b)

Paragraph (b) of final § 3173.14 sets forth the exceptional circumstances in which the BLM will allow commingling even when the circumstances outlined in paragraph (a) are not met because, for example, there is a combination of Federal and non-Federal ownership, Indian allotted leases are involved, or the Federal or Indian leases have different royalty rates. This paragraph includes the two circumstances given in the proposed rule: Economically marginal properties (called low-volume properties in the

proposed rule) and overriding considerations, such as environmental impacts. The final rule also adds three additional circumstances where the BLM can approve commingling:

- When the average monthly production over the preceding 12 months for each Federal or Indian lease, unit PA, or CA proposed for the CAA is less than 1,000 Mcf of gas per month, or 100 bbl of oil per month;
- The CAA has been authorized under tribal law or otherwise approved by a tribe; or
- The CAA covers the downhole commingling of production from multiple formations that are covered by separate leases, CAs, or unit PAs where the BLM has deemed the commingling of these formations to be an acceptable practice for the purpose of achieving maximum ultimate economic recovery and resource conservation.

The BLM received numerous comments on this paragraph in the proposed rule, stating that the exceptions granted in paragraph (b) of the proposed rule were not adequate for surface commingling approvals in cases involving low production volumes. The commenters said that this would result in lost oil and gas production, revenue, and royalties from operators forced to shut-in thousands of wells covered by existing CAAs where surface commingling takes place and where the economics did not justify the cost of installing new metering and measurement equipment. In many of these instances, the commenters stated that production volumes have declined to the point where the revenue from continued operation would not be sufficient to justify installing new measurement equipment, particularly in the current low-price environment.

The BLM disagrees with these comments. The provisions for approving a CAA for economically marginal properties (low-volume properties in the proposed rule) in both the proposed rule and the final rule were designed specifically to allow the BLM to determine if a property would truly be shut in if the only alternative was for the operator to achieve non-commingled measurement of production. The BLM believes many of the worst case scenarios flagged by commenters would fit within the economically marginal property exception. Unlike downhole commingling, the costs for surface commingling are relatively easy to define. An operator on the edge of profitability should be able to demonstrate to the BLM under paragraph (b)(1) that the properties proposed for commingling qualify as economically marginal properties. The commenters did not submit any data to substantiate that the existing provisions under paragraph (b)(1) were inadequate as they relate to surface commingling.

Although the BLM did not make any changes to the rule based on these comments, the BLM changed the economic threshold in the final rule based on comments on the definition of low-volume property in the proposed rule. As discussed in connection with § 3173.1, under the new definition of an economically marginal property, the BLM changed the threshold from a 10 percent before-tax rate of return in the proposed rule to an 18-month after-tax payout in the final rule. The BLM believes this change will increase the number of leases, unit PAs, or CAs that would qualify as economically marginal leases and, therefore, might qualify for a CAA under this paragraph. The BLM does not have any data to quantify this increase, however.

Commenters also expressed concern about the workload and timeframes involved with obtaining a commingling approval under paragraph (b). Because the provisions of

paragraph (b)(1) of both the proposed and final rule are very similar to the provisions of IM 2013-152, the BLM has experience with the process of reviewing CAAs for economically marginal properties. Based on its experience processing commingling requests under IM 2013-152, the BLM agrees that the process for requesting and reviewing a CAA can take time, especially for properties that do not clearly fit within the economic thresholds established in the final rule.

As a result, the BLM made two changes in the final rule. The first change was to grandfather any existing surface commingling approval where the average production rate over the previous 12 months for each of the Federal or Indian leases, unit PAs, or CAs included in the approval is less than 100 bbl of oil per month or 1,000 Mcf of gas per month (see § 3173.16(a)(1) and (2)). Second, recognizing that such limited production may also occur in connection with new CAA approvals, § 3173.14(b)(2) now allows the BLM to approve new CAAs if the average production rate from the proposed CAA satisfy the thresholds for grandfathering of existing CAAs. The new CAA would also have to comply with § 3173.14(a)(2) through (4); however, under the final rule, the BLM will not require any additional economic analysis from the operator.

The BLM chose these thresholds because properties producing below these thresholds would almost always qualify as economically marginal properties under this rule. Therefore, the BLM can approve commingling requests that qualify under this paragraph with significantly less paperwork burden on both the BLM and industry, and without the in-depth economic analysis that would have been required in the proposed rule. The BLM chose the oil threshold of 100 bbl per month by assuming the cost of achieving non-commingled measurement of oil would be $50,000 (setting a small oil tank, for example).

The production rate required to achieve an 18-month payout of this investment, assuming a $60 per bbl oil price and including taxes, royalty payments, and fixed and variable operating costs, would be about 3.5 bbl per day, or approximately 100 bbl per month.

The BLM used a similar approach for determining the gas threshold. The BLM assumed that an operator would have to invest $20,000 to achieve non-commingled measurement of gas (the cost of installing a new meter). The production rate required to achieve an 18-month payout of this investment, assuming a $3 per MMBtu gas price, and including taxes, royalty payments, and operating costs, would be about 30 Mcf/day, or roughly 1,000 Mcf per month.

The BLM added § 3173.14(b)(3) to the final rule, which provides for CAAs that have been authorized under tribal law or otherwise approved by a tribe. The BLM included this provision in response to tribal comments indicating that tribal law or agreements may independently identify circumstances where commingling is appropriate. The BLM added this provision because it believes that tribes should have a say in approving CAAs that involve production from tribal leases.

The BLM received many comments stating that the exceptions provided in § 3173.14(b) of the proposed rule did not address downhole commingling agreements in the New Mexico portions of the San Juan and Permian Basins and elsewhere that would not meet the requirements § 3173.14(a). The commenters said that this omission would result in lost oil and gas production, revenue, and royalties from operators forced to shut-in thousands of wells at existing CAAs where downhole commingling takes place and where the economics do not justify the cost of drilling additional wells or segregating downhole production. Many of the wells, according to the commenters, were drilled

specifically to commingle downhole production from multiple leases, CAs, and unit PAs, including combinations of Federal, Indian, fee, and State ownership. The commenters said downhole commingling allows operators to reduce costs and environmental impacts by reducing the number of wellbores because multiple zones can be produced out of a single wellbore. In addition, commenters stated that some individual zones do not have enough production to justify the drilling and completion costs for separate wells. Other commenters stressed that downhole commingling increases the maximum ultimate economic recovery because reservoir energy from lower formations allows oil and gas from highly-depleted upper formations to be produced (i.e., production from the lower formation is necessary to produce the upper formation). In many of these instances, production volumes have declined to the point where the revenue from continued operation would not be sufficient to justify drilling new wells or re-completing existing wells to avoid downhole commingling, particularly in the current price environment.

The BLM agrees with commenters that the exceptions listed in the proposed rule, need to be expanded to account for downhole CAAs, to ensure that improvements in measurement accuracy and the BLM's ability to verify production made by this rule do not unnecessarily result in operators shutting in large numbers of existing wells, particularly during times of low commodity prices. The BLM believes that it is in the public interest to receive royalty on a volume of oil or gas that may have heightened levels of uncertainty and may not be perfectly verifiable by the BLM, rather than receiving no royalty at all if the property is shut in to avoid the cost of achieving uncertainty and verifiability goals.

The low-volume exemption in the proposed rule would have provided an objective measure of the economic viability of a lease, CA, or unit PA, as it relates to downhole commingling. However, this economic test has been difficult to implement for downhole commingling applications under IM 2013-152 because the costs associated with achieving non-commingled downhole production are highly speculative and vary by facility and formations. These costs could be in the millions of dollars if an operator had to drill multiple wells in lieu of downhole commingling in one wellbore. It is also difficult to predict or quantify the benefits of increasing the maximum ultimate economic recovery from a well due to the ability to produce more oil and gas from downhole commingling.

As a result of these comments, the BLM made two changes in the final rule. First, the BLM added an exception for certain categories of downhole commingling under paragraph (b)(4). This new exception allows the BLM to approve downhole commingling of production from multiple leases, CAs, and unit PAs if the BLM deems the proposed operation to be an acceptable practice for the purpose of achieving maximum economic recovery and conservation of the oil and gas resource. This exception provides a means for the BLM to recognize downhole commingling practices that have historically been approved in areas where such practices provide the only way to produce the Federal or Indian interest, and therefore are necessary to avoid having some operators prematurely plug existing wells. The addition of this provision gives Field Offices flexibility to approve downhole commingling requests based on local knowledge and experience with the characteristics of a particular oil or gas reservoir. Second, for existing downhole commingling approvals, the BLM added § 3173.16(a)(1), which will grandfather all

downhole commingling approvals in existence prior to the effective date of this rule (see discussion under § 3173.16(a)(1)).

Several commenters said that the final regulations should state clearly how the BLM will balance the Federal interest in royalty measurement against competing interests, such as environmental concerns. One commenter recommended that the BLM include an exemption from the commingling requirements in situations where the BLM's denial of a request for a CAA would increase a project's environmental impact. The BLM did not make any changes to the rule in response to these comments because paragraph (b)(5) of the final rule already expressly allows the BLM to consider approving a CAA if there are overriding conditions, such as topographic or other environmental considerations, notwithstanding potential negative royalty impacts from commingled measurement. Section 3173.14(b)(2) of the proposed rule contained a similar provision. The BLM has determined that this language would allow the BLM to grant new CAAs in instances where the BLM determines that minimizing environmental impacts takes precedence over ensuring accurate and verifiable measurement and proper reporting of oil and gas removed or sold from a lease, unit PA, or CA. The BLM believes these situations will be rare and CAA approval will only be considered after exhausting all feasible alternatives, including alternate measurement techniques. The environmental analysis for the final rule indicates that in most cases where operators are required to install new facilities, they will likely place those facilities at sites where there is existing surface disturbance and where the environmental impact would be minimal (see the Procedural Matters section below for more discussion about the environmental analysis). If new equipment requirements

result in new surface disturbances, the BLM, under the provisions of this rule, will evaluate any potential environmental impacts and require operators to mitigate them.

One commenter stated that the added and unnecessary cost to industry to have to build and maintain separate pipelines and facilities without a substantial benefit for the BLM in return is unreasonable. The commenter said that they have a few wells in a field that are not in the unit, but use the same facilities that service the unit. The commenter is concerned that they would not be able to continue commingling in the future without doing a substantial economic study to quantify the cost to build separate facilities including shipping facilities. Another commenter asked the BLM to consider exempting those properties that are in close proximity to an existing gathering system and allowing production from those properties to be commingled with other properties, even if they are not considered to be low-volume properties.

The BLM disagrees with these comments and did not make any changes to the rule as a result. Allocation methods that affect royalty measurement and reporting have the potential to increase measurement uncertainty, introduce bias, and inhibit the BLM's ability to verify and account for oil and gas production removed or sold from a lease, unit PA, or CA. The exceptions that allow for commingling when allocation methods affect royalty are included in paragraph (b) of the final rule; they cover cases where the requirement to achieve non-commingled measurement of production would cause a prudent operator to shut in production or would cause significant and unavoidable environmental impacts. When demonstrating whether a lease, unit PA, or CA is economically marginal, operators can and should include the cost of building additional gathering lines, any new facilities, and mitigating environmental impacts into their capital

cost calculations to see if they would qualify for commingling approval under paragraph (b)(1) of this section. If they do not meet the definition, or any of the other exceptions in paragraph (b) of this section, then the operator should be able to construct the additional facilities while still realizing a reasonable return on that investment, rather than shutting in production from a particular well.

One commenter was concerned that, under the CAA requirements, operators who currently commingle small amounts of saleable liquids produced from gas wells (e.g., condensate) would have to install separate storage tanks for that liquid, imposing a significant and unjustified cost on operators. The BLM agrees with this concern raised by the commenter and made two changes to the final rule as a result. First, the definition of economically marginal property (low volume property in the proposed rule) was changed in the final rule to clarify that the expected costs and revenues for the economic analysis need only take into consideration the commodity for which the measurement equipment would be built, whether it is the oil or gas. In the example provided by the commenter, the economic analysis of condensate measurement would only consider the income stream from the sale of condensate and would not include the income stream from the sale of gas. Therefore, the small amounts of condensate generated would likely qualify for an exemption under paragraph (b)(1). Second, the BLM added paragraph (b)(2) to the final rule which provides an automatic exemption from the CAA restrictions and from performing an economic analysis for leases, unit PAs, or CAs that produce less than 100 bbl of oil per month or 1,000 Mcf of gas per month, averaged over the previous 12 months. In this example, if the small amount of saleable condensate was less than 100 bbl per month averaged over the previous 12 months, the BLM could grant commingling

approval for the condensate without any further analysis, assuming that the conditions in paragraph (a)(2) through (a)(4) were also met.

One commenter representing Native Alaskan interests said it would not be economically feasible to prevent commingling of production from BLM lands that are within a unit PA that has an existing measurement system approved by all parties, when the BLM lands comprise only a small portion of the production. The BLM did not make any changes to the final rule in response to this comment, for two reasons. First, if the BLM portion of the unit PA is very small or the production is low, it might qualify as an "economically marginal property" under the definition of an economically marginal property in § 3173.1. In this case, the BLM could approve commingling with other unit PAs within the unit or other properties outside of the unit. The BLM may also be able to approve commingling under § 3173.14(b)(5) if achieving non-commingled measurement of production addresses some overriding consideration, such as avoiding undue environmental impacts. If, on the other hand, the properties that are proposed for inclusion in a CAA do not meet the definition of economically marginal properties, do not present some other overriding consideration, such as environmental impacts, or otherwise satisfy one of this rule's criteria, then the BLM will require the operator to achieve non-commingled measurement of that unit PA.

A couple of commenters suggested that the BLM is creating new law by establishing standards and requirements for existing CAAs that were not in Order 3. The BLM does not understand the comment. The purpose of the rulemaking process that the BLM is going through is to establish new standards and requirements. By following the BLM's authorizing statues and the procedures established by the Administrative

Procedure Act, 5 U.S.C. 551 et seq., the BLM is able to establish new or different standards and requirements than those found in existing Order 3. As explained elsewhere in this preamble, the final rule is squarely within the scope of the BLM's authorizing statutes and the related delegations of authority from the Secretary.

Several commenters also said the BLM has not analyzed the impacts of the rule on industry and the BLM, and requested clarification on how the BLM will balance the Federal interest in royalty measurement against competing interests. The BLM disagrees that it has not analyzed the impacts on industry or the BLM. As stated earlier in this preamble, the BLM has rigorously weighed and considered the economic impacts that this final rule will have on industry and prepared draft and final regulatory impact analyses for this rulemaking, which are available to the public. The Procedural Matters section of this preamble contains a short discussion of this rule's potential economic impact on industry. The analysis estimates that this rule's CAA requirements will have a one-time cost to industry of $4.9 million to $7.6 million for operators to submit documentation and respond to the BLM's informational requests for existing leases, and $2.7 million to install meters where the BLM rescinds existing commingling agreements. The analysis also estimates there will be an annual paperwork cost to industry from these provisions of $3 million to $4.6 million for new and modified commingling agreements, and $1.6 million in new annual metering installation costs for those FMPs where a commingling agreement is rescinded.

The BLM believes that the final rule provides clear guidance on how the BLM will balance the Federal interest in accurate measurement with competing interests, such as not causing production to be shut in or creating additional environmental impacts. The

final rule includes numerous provisions that allow commingling in cases where the public interest is better served by allowing commingling even if it results in potential negative effects to royalty measurement. These instances include properties that the BLM determines to be economically marginal, properties that produce below set thresholds, situations that involve downhole commingling, and where unnecessary or undue degradation or unavoidable environmental impacts or other overriding considerations would result if commingling were denied. The BLM did not make any changes to the rule based on these comments.

Section 3173.15 Applying for a Commingling and Allocation Approval

Section 3173.15 of the final rule establishes the requirements operators must follow when requesting a CAA, and the information they need to include. Most of these requirements were in the proposed rule, but the final rule includes changes to the amount and type of information operators must include in their applications. The BLM made these changes in response to many comments it received on this section. The following discussion describes those comments and the changes that were made.

One commenter suggested that proposed paragraph (b) be changed to require operators to submit as part of their CAA applications an allocation method, instead of an allocation schedule, which is subject to frequent changes. The BLM agrees that information about a CAA's allocation method would be more useful, and as a result changed the final rule to require an allocation method instead of a schedule.

Several commenters said they did not believe the BLM has the authority to require operators to submit site facility diagrams as part of new CAA approvals for existing facilities, as required in paragraph (e) of the proposed rule. The BLM agrees that it does

not need a site facility diagram to approve a CAA application for existing facilities and has eliminated that requirement in the final rule in response to these comments.

One of the commenters asked about the purpose in § 3173.15(e), for requiring operators to provide a map showing the boundaries, FMPs, and location of wellheads and production facilities as part of their commingling and allocation application. In response, the BLM changed paragraph (e) of the final rule to reduce the amount of information that operators must include in maps submitted as part of CAA applications. The required maps need only show the boundaries of any lease, unit, unit PA, or CA from which production is proposed to be commingled and indicate the locations of existing or planned facilities with the relative location of all wellheads (with API numbers), the piping, and existing or proposed FMPs included as part of the CAA request. The BLM needs this information for several reasons, one of which is to determine if all the production flowing through the proposed FMP originates from the leases, unit PAs, or CAs proposed to be part of the CAA. Another reason is to obtain clarity on what leases, unit PAs, or CAs are actually proposed for commingling. This is especially important when unit PAs or CAs are included in the proposal. In these situations, the location of a well or facility in relation to lease, unit PA, or CA boundaries, is critical for the BLM to understand when evaluating a commingling application. For example, one well may be physically located on a Federal lease but only produce from a CA that covers one of the formations under that lease, while another well on the same lease may only produce from a portion of the lease that is not part of the CA. In this case, the BLM would have to understand that even though both wells are physically located on the same lease, a CAA

is required to combine their production because their production originates from different properties. The BLM did not make any changes to the rule based on these comments.

One commenter asked whether the BLM planned to monitor which wells are flowing to which FMP and make operational recommendations. While the BLM has no intention of making operational recommendations, it will monitor which wells are flowing to which FMPs if that affects the CAA or the underlying allocation of production. The BLM did not make any changes to the rule based on these comments.

Several commenters wanted to know why, in § 3173.15(k), submission of up to 6 years of gas analyses, including Btu content and all oil gravities, is required for CAA requests. They indicated that it would be too burdensome for CAA applicants to provide historical crude oil gravity and natural gas heating value data, as only current data is relevant for trying to determine the prices received for these products. A couple of other commenters said this information requirement is excessive and would not improve the quality of the application. The BLM does not believe this to be an onerous requirement. First, 6 years' worth of data would not necessarily include a lot of data, especially for lower producing leases, unit PAs, and CAs for which the BLM would consider approving a CAA. For example, under 43 CFR 3175.100, a very-low-volume FMP (producing 35 Mcf per day or less), is only required to have a gas analysis taken once per year, so 6 years of data for that well is only 6 gas analyses. For oil, the API gravity is only determined when an oil sale takes place. A low-producing oil lease may only have an oil sale several times per year, in which case 6 years of API gravities would include only one or two dozen API gravities. Second, operators should already have this information readily available because they are currently required to maintain records for at least 6 years under 43 CFR

3170.7, which retention period has been increased to 7 years for Federal leases under this rule. One of the reasons the BLM needs historical Btu and API gravities is to assess the allocation methodology proposed by the operator. If, for example, the gas analysis data showed statistically significant variations between Federal and non-Federal properties proposed for a CAA, the BLM may require that the allocation method account for the Btu differences. On the other hand, if the gas analyses for the properties proposed for commingling were not significantly different, then the allocation method could be purely volume based. The BLM could also analyze the historical trend of Btu content or API gravity to determine if, for example, increasing Btu content could result in greater future royalty. Without this data, it would be impossible for the BLM to perform any analysis on the allocation method or on future revenue projections as part of an economic analysis.

Another commenter noted that this information has no royalty impact if the properties are 100 percent Federal or Indian mineral ownership with the same fixed royalty rate and distribution. The BLM agrees with this comment and added a caveat to § 3173.15(k) indicating that this information is required only if the CAA is not approved under § 3173.14(a)(1).

The BLM also determined it was necessary to make other changes to § 3174.15 in the final rule to address considerations related to the administration of the rule. As part of the final rule, the BLM clarifies in paragraphs (f) through (i) which additional approvals operators must seek if their commingling proposals entail new surface disturbance or take place on Indian lands or on lands administered by other Federal surface management agencies, in case operators are unaware of these requirements. Finally, this section

clarifies that if off-lease measurement is part of a commingling and allocation proposal, then a separate Sundry Notice under § 3173.23 is not needed as long as the information required under paragraphs (b) through (e) and, where applicable, paragraphs (f) through (i) of § 3173.23 is included as part of the request for approval for commingling and allocation. This revision clarifies that an applicant may submit both proposals in one Sundry Notice request.

Section 3173.16 Existing commingling and allocation approvals

Under § 3173.16 of the final rule, the BLM will review an existing CAA when it receives an operator's request for an FMP number for a facility associated with the CAA. The BLM made numerous changes to both the structure and content of this section in the final rule in response to comments.

§ 3173.16(a)

A new paragraph (a) was added to the final rule that grandfathers existing commingling approvals in some specific situations. Paragraph (a)(1) grandfathers all existing downhole commingling approvals.

Based on the numerous comments the BLM received on downhole commingling approvals (see a discussion of those comments under § 3173.14(b)), the BLM decided to grandfather all existing downhole commingling approvals. The BLM is aware that there are large numbers of wells in the San Juan basin and elsewhere that are currently approved for downhole commingling. The BLM believes that the vast majority of these wells are producing low volumes of oil and gas and that continued production of these wells increases the maximum ultimate recovery of oil and gas. As a result, the BLM has made a determination that it is in the public interest to ensure these wells continue to

produce even if the methods used to allocate production to Federal and Indian leases, unit PAs, and CAs potentially result in higher levels of uncertainty, bias, and make verification of production more difficult. The BLM also believes that most of these wells would be approved by the BLM to continue commingling even if the BLM were to perform an evaluation on them as would have been required under this section of the proposed rule. Grandfathering all existing downhole commingling approvals will streamline the review process and reduce the paper work burden on both industry and the BLM. When the BLM receives a request for an FMP for a well that has an existing downhole CAA, the BLM will document that the existing downhole CAA qualifies under § 3173.16(a)(1) of the final rule. The BLM will address any shortcomings of the existing approval, such as the absence of a defined allocation method, on a case-by-case basis during inspections and production audits. The BLM may issue written orders to operators to correct these deficiencies.

Paragraph (a)(2) grandfathers existing surface commingling approvals where each lease, unit PA, or CA that is part of the approval produces less than 100 bbl of oil per month or 1,000 Mcf per day of gas per month, averaged over the previous 12 months. See the discussion under § 3173.14(b) for an explanation of how the BLM derived these thresholds. As with downhole commingling, the BLM decided to grandfather these existing commingling approvals based on comments received on the proposed rule. However, the BLM does not agree with comments stating that the economic exemptions in the proposed rule were inadequate. The BLM believes that the economic exemptions in both the proposed and final rules are adequate to address those operations where achieving non-commingled measurement of production would truly be uneconomic. In

addition, the definition of an economically marginal property in the final rule expands the criteria in the proposed rule by changing the threshold from a 10 percent before tax rate of return to an 18-month after tax payout. The BLM believes this could significantly increase the number of leases, unit PAs, and CAs that would be able to qualify for the economic exemption.

The BLM does, however, agree with comments expressing concern over the paperwork burden associated with preparing and reviewing applications involving lower volume leases, unit PAs, and CAs. The BLM chose to grandfather these existing surface commingling approvals based on the understanding that leases, CA, and unit PAs producing below these thresholds would almost certainly qualify under the definition of an economically marginal property. The purpose of grandfathering these approvals, therefore, was to reduce the paperwork burden for both the BLM and industry.

Under this provision, the operator of any lease, unit PA, or CA that is below these thresholds would retain the existing CAA from the BLM without any further information or analysis required. The BLM would only have to verify that the average monthly production rates of the leases, CAs, and unit PAs included in the approval are below the thresholds listed in this section.

§ 3173.16(b)

A new provision has been added to paragraph (b), which clarifies that if the grandfathering conditions in paragraph (a) of this section are not met, then the existing CAA must meet the minimum standards and requirements for a CAA under § 3173.14 of the final rule.

This section also sets out a process if the AO identifies deficiencies. Paragraph (b)(1)

requires the AO to notify the operator in writing of any inconsistencies or deficiencies with an existing CAA. The operator will then be given 20 days after receipt of such notice to correct any inconsistencies or deficiencies, provide the additional information requested, or request an extension of time. When the AO is satisfied that the operator has corrected any inconsistencies or deficiencies, the AO will terminate the existing CAA and grant a new CAA based on the operator's corrections.

Paragraph (b)(2) clarifies that the AO may terminate an existing CAA and grant a new CAA with new or amended COAs to make the approval consistent with the requirements for CAAs under § 3173.14 of the final rule. Under the proposed rule the AO could simply impose new or amended COAs to an existing commingling approval.

§ 3173.16(c)

One of the primary goals of paragraph (c) in the final rule (§ 3173.16(a) through (d) of the proposed rule) is to ensure that existing commingling approvals that do not qualify for grandfathering under paragraph (a) of this section, meet the standards for commingling under § 3173.14. Another primary goal is to ensure that, if the existing commingling approval does meet the standards under § 3173.14, it also contains the information required under § 3173.15, to ensure that the BLM can verify the volumes allocated to each lease, unit PA, or CA that are part of the existing CAA.

Under paragraph (c), the BLM will review existing CAAs that do not qualify for grandfathering under paragraph (a), for their consistency with the minimum standards and requirements under § 3173.14 when the operator submits a request for an FMP number. If the BLM determines that the existing CAA does not meet the requirements under § 3173.14, the BLM may take several courses of action. Under paragraph (c)(1),

the AO will notify the operator in writing of any inconsistencies or deficiencies that the BLM identifies. The operator will have 20 business days to provide additional information requested by the BLM, request an extension of time in which to reply to the AO, or correct any inconsistencies or deficiencies. Under paragraph (c)(2), the BLM can impose new or amended COAs on an existing CAA to make it compliant with the requirements of this final rule. Paragraph (c)(3) allows the AO to terminate the CAA if the operator fails to correct the deficiencies that the BLM identifies.

The only significant change to paragraph (c)(1) of the final rule relative to paragraph (b) of the proposed rule is that the BLM clarifies that when the operator corrects any inconsistencies or deficiencies, the BLM will terminate the existing CAA and grant a new CAA in its place. The BLM made a similar change to paragraph (c)(2) of the final rule (paragraph (c) of the proposed rule), which clarifies that the BLM will impose new or amended COAs on an existing CAA by terminating the existing CAA and granting a new CAA in its place that includes those COAs.

Under paragraph (d) of the final rule (paragraph (e) of the proposed rule), if the BLM approves a new CAA to replace an existing agreement, it will be effective on the first day of the month following its approval. The BLM also included a new sentence in this paragraph that clarifies that any resulting change in the allocation method will only apply from the effective date of the CAA forward. The BLM added this clause to clarify that changes in the allocation method will not be applied retroactively. The BLM believes that retroactive application of new allocation percentages would impose a large paperwork burden on both industry and the BLM and would not be necessary.

Numerous commenters requested that the BLM consider grandfathering all existing CAA approvals. One commenter said the modifications to their facilities will put up to 87 percent of their production at risk of being shut in and possibly lost forever, along with the royalties to each of the mineral owners. The BLM agrees that there are instances where existing commingling agreements do not need to meet the final rule's commingling standards outlined in § 3173.14(a)(1), and has provided exemptions in § 3173.16(a) that allow operators to maintain existing agreements. See the discussion under § 3173.16(a) for further discussion. In addition, § 3173.14(c) includes three additional circumstances, beyond the three provided under the proposed rule, in which the BLM can approve a CAA. Given the grandfathering provisions and the expanded number of situations where the BLM can approve a CAA under the final rule, the BLM does not believe that any existing CAAs that are truly on the edge of profitability will be impacted by the final rule's requirements.

Other commenters did not like the idea of being required to upgrade existing wells and facilities that comply with existing laws, regulations, and policies. While the BLM notes that standard terms and conditions found in Federal oil and gas leases require compliance with all applicable requirements, including requirements that might be subsequently promulgated by the BLM, the BLM nevertheless believes that this comment has some merit. Most existing surface commingling approvals are for leases, unit PAs, and CAs where production volumes are low enough, or other overriding considerations exist, such that the CAA will comply with the requirements of § 3173.14(a) or (b) of the final rule with little or no changes required. Similarly, any CAA granted under IM 2013-152 should already meet the requirements of the final rule, especially considering that the

final rule adds four additional exemptions under which the BLM may grant a CAA as compared to the two exemptions allowed under the IM (for low-volume properties and overriding considerations), and lowers the threshold for leases, unit PAs, and CAs to meet the definition of an economically marginal property. For the relatively few existing CAAs that do not meet the requirements of the final rule, some changes to plumbing or measurement equipment may be required. In these cases, the BLM will determine that a CAA is not justified because these leases, unit PAs, or CAs do not meet the definition of an economically marginal property and no other overriding conditions exist that would allow the BLM to grant a CAA.

One commenter said the proposed rule would require operators to submit all existing authorizations to the BLM for re-approval, and added that many operators and BLM staff spent countless hours negotiating approvals of existing CAAs to ensure they protect environmentally sensitive areas while providing accurate measurement of production. Although the BLM did not make any changes to the rule based on this comment, the final rule includes grandfathering provisions under § 3173.16(a), which would no longer require operators to submit existing downhole commingling authorizations or surface commingling authorizations that qualify under § 3173.16(a)(1) and (2) when applying for an FMP. In addition, for those existing CAAs that do not meet the grandfathering criteria of paragraph (a) of this section, but comply with the requirements of the new rule, the BLM will not require re-approval – these CAAs will be allowed to continue as originally approved.

Several commenters disagreed with the requirement in § 3173.16(c)(1) that operators correct any inconsistencies or deficiencies that the AO finds with an existing CAA within

20 business days. One commenter said North Slope operators have significant weather-related challenges that would make it difficult for them to meet the 20-business-day deadline, while another said that the required fixes could involve installing new piping, which would likely take longer than 20 business days. Several commenters said this final rule will require every existing CAA to have some work done and operators must be given flexibility if they have multiple CAAs because 20 business days may not be enough time to bring them all into compliance. Another commenter said that they have made substantial investments in their gathering systems and would need a reasonable amount of time to make the changes to facilities that handle leases with mixed ownerships that are not already part of a unit PA or CA.

In response to these comments, the BLM added language to the final rule at § 3173.16(c)(1) which allows an operator to request an extension during the 20-business-day timeframe. The operator should justify the extension request by explaining the factors that will not allow it to comply within the 20-business-day timeframe, and provide a timeframe under which they can comply. The BLM will consider the request and grant an extension if the justification is adequate. This final rule will not require every existing CAA to undergo significant work to bring it into conformity with the new requirements as one commenter suggested. In fact, the BLM estimates that the majority of existing CAAs will continue operating as they have been because they are exempt from the requirements due to their low production volumes or other factors.

Several commenters said it would be unfair for the BLM to apply new COAs that existing CAAs could not meet, causing production to be shut in. Another commenter said it would be unreasonable for the BLM to impose new or amended conditions of

approvals on existing commingling agreements and recommended that § 3173.16(c) be deleted altogether. The BLM does not agree with these comments and did not make any changes to the final rule as a result.

The BLM estimates that only a small percentage of existing CAAs will require new COAs and most of those COAs will be for minor deficiencies such as providing a better explanation of the allocation process. For those new COAs that require additional work to which the operator may object, the BLM has already included a provision in paragraph (c)(2) of the final rule that will allow the existing CAA to continue in effect during the pendency of any appeal of the decision that requires the new COAs. The BLM did not make any changes to the rule based on these comments.

Lastly, some commenters expressed concern that existing CAAs were at risk of being terminated if the BLM did not timely respond to their FMP applications and review their CAA approvals. As stated earlier, operators may continue to produce oil and gas prior to FMP approval and CAA review and may continue to use their lease, unit PA, or CA numbers for reporting production to ONRR as long as they have applied for their FMP numbers within the deadlines specified under § 3173.12. The BLM did not make any changes to the rule based on these comments.

Section 3173.17 Relationship of a commingling and allocation approval to royalty-free use of production

Section 3173.17 clarifies that approval of a CAA does not constitute approval of off-lease royalty-free use of production in facilities located at an off-lease FMP approved under the CAA. The BLM did not make any changes to this section.

One commenter from the San Juan Basin said the new CAA requirements would reduce Federal royalties from existing CAAs because operators would have to install new compressors at each well, resulting in more royalty-free production used as fuel to power those compressors. The commenter provided a diagram that showed a compressor for each lease that they believe would be required if commingling was not approved. For comparison, another diagram showed one large compressor located at an off-lease FMP in lieu of the wellhead compressors, if commingling was approved. The commenter stated that with commingling approval, operators must pay royalty on the fuel used at the commingled off-lease compressor because it does not qualify as royalty-free use.

The BLM disagrees with the premise of this comment because there is nothing in the scenario presented by the commenter that would compel them to install separate lease compressors if the BLM denied commingling. The small amount of royalty the operator would not have to pay if the compressors were located on-lease would never offset the additional capital and ongoing expense of having to install, operate, and maintain three lease compressors as compared to one large compressor located at a central delivery point. Instead, if the BLM did not grant a CAA, a prudent operator would simply use the allocation meters already installed at each property they were proposing to commingle as FMPs, continue to use the large off-lease compressor, and continue to pay royalties on the fuel used to run that compressor as they do now. The BLM did not make any changes to the rule based on this comment.

Another commenter stated that other royalty owners will be burdened by all the downstream losses (fuel, etc.) if the operator must install an on-lease FMP rather than rely on measurements taken at a downstream commingled measurement point.

According to the commenter this raises legal concerns with respect to other agency regulations and contractual agreements between operators. The BLM disagrees with this comment and did not make any changes as a result. The requirement to install an FMP on the lease, unit PA, or communitized area, and pay royalty based on that FMP only applies to Federal and Indian leases. It would not preclude other royalty owners to base their royalty distribution on a down-stream commingled measurement point that is different from the FMP on which the Federal or Indian royalties are based.

Section 3173.18 Modification of a commingling and allocation approval

Section 3173.18(a) of the final rule identifies the circumstances under which all operators who are parties to a CAA must request a modification, including: Modifications to the allocation agreement; inclusion of additional leases, unit PAs, or CAs into a CAA; or termination of a lease, unit PA, or CA within a CAA. Paragraph (b) identifies the information that must be submitted in connection with a modification request. Paragraph (c) was added to the final rule to clarify that a CAA does not need to be modified when there is a change in operator.

One commenter suggested that the BLM change proposed § 3173.18(a)(1), which allowed operators who are a party to a CAA to modify the CAA when there is a change in the allocation schedule. The commenter said it was not practical or beneficial to update the CAA each time the allocation schedule changes. The BLM agrees that requiring an update to the CAA when the allocation schedule changes is not necessary. The intent of requiring information on the allocation was to ensure that the BLM can verify and re-calculate the volumes reported on the OGORs. Allocation schedules are often based on periodic well testing and can change each time a well test is conducted. As

long as the BLM thoroughly understands the allocation methodology, we can request the well testing or other data from which the operator determines the allocation schedule and verify that the allocation was done in accordance with the allocation methodology and was properly reported on the OGOR. Paragraph (a)(1) has been modified to require a CAA modification only when there is a modification to an allocation agreement, which in the final rule must include an allocation methodology rather than an allocation schedule. Thus, only if there is a change in the methodology used to determine allocation percentages would an operator have to make changes to their existing CAA. A change to the allocation schedule itself would not require such a modification.

One commenter did not like the idea of having a CAA re-evaluated when new leases are proposed to be added to the CAA, as required under § 3173.18(a)(2). The BLM disagrees with this comment and did not make any changes to the rule as a result. The addition of a lease, unit PA, or CA to an existing CAA will affect the allocation of production in a CAA, and therefore the BLM will need to review the addition to ensure that the allocation method is verifiable and provides a fair return to the Federal Government or Indian tribes or allottees.

Finally, several commenters asked whether submission of a "Successor of Operator Sundry Notice" would automatically change the operator of the FMP and the CAA. A Sundry Notice for a change in operator of a well(s) and a facility on a lease, unit PA, or CA will designate that new operator as being responsible for reporting production from the property, and therefore will include the CAA agreement. In response to this comment, the BLM has removed one of the conditions under which a CAA may be modified – when there is a change in operator. Furthermore, a new paragraph (c) has

been added to the final rule stating that a change in operator will not trigger the need to modify the CAA. The FMP will automatically transfer since it is part of the facility.

Section 3173.19 Effective date of a commingling and allocation approval

Section 3173.19 (a) and (b) of the final rule identifies the effective date of a CAA after the approval of an application or modification, respectively. Paragraph (c) of this section clarifies that a CAA does not modify any of the terms of any leases, unit PAs, or CAs. The BLM did not receive any public comments on this section and did not change it in the final rule, except to make minor modifications for clarity.

Section 3173.20 Terminating a commingling and allocation approval

Paragraph (a) of § 3173.20 of this final rule (paragraph (b) of the proposed rule) authorizes the BLM to terminate an approved CAA for any reason, including changes in technology, regulation, or policy, or where the operator has not complied with the terms of the CAA. Paragraph (b) (paragraph (c) of the proposed rule) provides for automatic termination of a CAA if only one lease, unit PA, or CA remains in the CAA. Paragraph (c) (paragraph (a) of the proposed rule) states that an operator may terminate its participation in a CAA by submitting a Sundry Notice to the BLM. Unlike the provision in the proposed rule, paragraph (c) of the final rule clarifies that the termination by one operator does not automatically terminate the CAA as to all other operators, so long as the requirements of this part are met with respect to the remaining participants in the CAA.

After termination of a CAA, paragraph (d) requires the BLM to notify in writing all operators who are a party to the CAA of the effective date of the termination and any inconsistencies or deficiencies with their CAA approval that caused the termination. The

BLM modified this provision from the proposed rule to provide that upon receipt of the BLM's notice of termination, the operator has 20 business days to correct any inconsistencies or deficiencies, or provide additional information that the AO has requested or that explains or justifies the inconsistency or deficiency. If the operator does not correct the inconsistency or deficiency within 20 business days after receipt of the BLM's notice, the CAA is terminated as of the effective date in the BLM's notice. The effective date of the termination will not be earlier than the 20 business days outlined in paragraph (d). Paragraph (e) provides that upon termination, each lease, unit PA, or CA may require a new FMP number or a new CAA. Under the final rule, operators will have up to 30 days to apply for a new FMP number or CAA, whichever is applicable. Following termination, while the BLM is processing the application for a new FMP number or CAA, the operator may use the existing FMP number for recordkeeping and production reporting.

Several commenters were concerned that paragraph (a) in the proposed rule would have allowed a party to a CAA to unilaterally terminate the CAA by submitting a Sundry Notice to the BLM, and that paragraph (b) in the proposed rule, or paragraph (a) in the final rule, allows the BLM to terminate a CAA for any reason. One commenter said it would be fine to allow a party to terminate their participation in the CAA, but the remaining operators should have the opportunity to continue with the CAA. One commenter asked that the final rule be changed to allow an existing CAA to continue after one of the parties pulls out, as long as the remaining operator(s) follow the COAs for the CAA.

The BLM agrees with the commenters and believes that the continued operation of a CAA when one operator decides to pull out is in the public interest. All the CAA requirements of this rule are designed to ensure that the CAA is in the public interest by, for example, allowing continued production of low volume properties, addressing other overriding considerations, or allowing the maximum ultimate recovery of oil and gas resources. The BLM does not believe that the decision of one operator to pull out of the CAA would change the BLM's public interest determination and terminating the CAA as a result would only result in additional paperwork for both the BLM and industry. Instead, the operator who wants to terminate its own, individual participation in the CAA should be able to do so. In response to this comment, the BLM removed proposed paragraph (a) in the final rule and re-designated it with modifications as paragraph (c). While paragraph (c) still allows an operator to terminate a CAA through submission of a Sundry Notice, the BLM clarified that paragraph in response to comments to make clear that termination of participation in a CAA by one operator does not necessarily impact all operators, so long as the other requirements of this part are met with respect to that CAA and the other operators submit a Sundry Notice for a new CAA as required by paragraph (e).

An operator who wishes to terminate its participation will need to submit the appropriate paperwork to the BLM as outlined in 3173.20(c). Additionally, if a CAA is terminated, paragraph (e) of the final rule no longer requires separate measurement. Rather, it gives operators 30 days to apply for a new FMP number and/or CAA, if applicable. The old FMP number may be used for recordkeeping and production reporting until a new FMP number is assigned or a new CAA is approved. If more than

one lease, unit PA, or CA remains in a CAA, the operator(s) of those leases, unit PAs, or CAs will need to submit a Sundry Notice for a new CAA under § 3173.18.

Another commenter stated that they have established gathering systems that are subject to the existence of CAAs. If the CAA is terminated by the BLM, the commenter states that operators could no longer sell gas into the gathering system, which could result in the shut in of wells, lost production and lost revenues. Instead, the operator suggests that if an operator no longer wants their lease to be part of a CAA, the CAA could be easily modified to include only the remaining leases. The BLM agrees with this comment and removed paragraph (a) as discussed above.

Regarding comments that the BLM should not have the authority to terminate existing CAA approvals for any reason, commenters already should be aware that under the terms of all existing CAAs, the BLM retains the right to terminate a CAA for any reason. Thus, the requirements found in paragraph (a) are a codification of existing practices. However, the reasons listed under paragraphs (a)(1) through (a)(3) of this final rule should cover the majority of the situations that could lead to termination of a CAA. If a CAA is not in compliance with this rule's commingling requirements, the BLM will work with the operators on a case-by-case basis to bring the CAA back into compliance to avoid a termination. If a CAA is terminated because of changes in technology, regulation, or BLM policy, operators will be given sufficient time to make any necessary changes. In the event that the BLM does take steps to terminate a CAA, paragraph (c) of this final section provides that the BLM's notice-of-termination letter will describe the inconsistencies or deficiencies that will lead to the CAA termination, along with the effective date of the termination. The parties to a CAA will then have an opportunity to

avoid termination of the CAA by correcting those inconsistencies or deficiencies within 20 business days of their receipt of notification.

Section 3173.21 Combining production downhole in certain circumstances

Section 3173.21 of this final rule identifies certain circumstances in which downhole combining of production is subject to the commingling requirements contained in §§ 3173.14 through 3173.20. Under paragraph (a)(1), the combination of production from a single directional well drilled into different hydrocarbon pools or geologic formations under separate adjacent properties, regardless of ownership, where none of the pools or formations are common to more than one of the properties, constitutes commingling under the final rule, and is therefore subject to the requirements in §§ 3173.14 through 3173.21 of this subpart. If, on the other hand, the pools or geologic formations are common to more than one property, then under paragraph (a)(2), the operator is required to establish a unit PA or CA as opposed to obtaining a CAA. Paragraph (b) clarifies that combining production downhole from different geologic formations on the same lease from a single well, while requiring AO approval, is not considered commingling for purposes of this final rule, unless those formations have different ownership.

The BLM did not receive any public comments on this section, but did make one small change. In paragraph (b), the final rule clarifies that the requirements of §§ 3173.14 through 3173.20 do not apply when operators combine production downhole from different geologic formations on the same lease in a single well.

Sections 3173.22 through 3173.28 Off-lease measurement approvals

Sections 3173.22 through 3173.28 of this final rule establish the circumstances in which the BLM will approve measurement of production off of the lease, unit, or CA

(referred to as “off-lease measurement”). Prior to this rule, there were no national standards that operators had to meet when applying for off-lease measurement. Neither Order 3 nor other regulations addressed how or under what circumstances the BLM would approve off-lease measurement. This lack of guidance led to much confusion over the location of off-lease measurement points. Off-lease measurement is also often associated with commingling. Meters that measure commingled production are often referred to as central delivery points. In most situations, the meter at the central delivery point is located off of at least one of the Federal or Indian leases, units, or CAs from which the production originates. This configuration requires the BLM to approve both the commingling and the off-lease location of the measurement point.

In the absence of uniform national standards governing off-lease measurement, BLM State Offices created their own policies for approving off-lease measurement applications, which were not necessarily consistent. Sections 3173.22 through 3173.28 of this final rule, discussed below, provide such uniform national standards, addressing the concerns identified by the GAO, the OIG, and the Subcommittee.

Some commenters said that this section contains new record-keeping requirements that are vague and that could cause operators to submit incorrect applications for off-lease measurement. The commenters did not specify the sections that they believe are vague, nor did they provide any explanation as to why they are vague. The BLM did not make any changes to the rule based on these comments. The BLM notes, however, that § 3173.23 contains a complete list all of the information and documentation that operators need to provide to the BLM when applying for off-lease measurement approvals.

Section 3173.22 Requirements for off-lease measurement

Section 3173.22 of the final rule establishes the conditions under which the BLM will consider granting a request for off-lease measurement. It requires such requests to satisfy the requirements of paragraphs (a) through (d). Under paragraph (a), the BLM will consider off-lease measurement of production only from a single CAA or a single Federal or Indian lease, unit PA, or CA. Paragraph (b) requires that the off-lease measurement provide for accurate production accountability and paragraph (c) requires that off-lease measurement be in the public interest. Paragraph (d) requires off-lease measurement to occur at an approved FMP.

Commenters asked that the BLM list the conditions under which off-lease measurement will be approved. The BLM did not make any changes to the rule based on this comment because this section clearly lists the conditions under which off-lease measurement will be considered for approval. Requests that meet the requirements of this section will be approved, while requests that do not will not be approved.

Another commenter requested that the BLM provide exemptions from the off-lease measurement requirements in situations where topography or other environmental issues prevent operators from measuring on-lease. The BLM agrees that there are circumstances when it is physically impractical to measure on-lease or where measuring on-lease could cause additional environmental impacts. Examples include situations where well pads are located at high altitudes that could be inaccessible in the winter or when the BLM has imposed seasonal access restrictions due to environmental concerns. In response to this comment, final paragraph (c) has been changed to allow off-lease measurement when on-lease measurement is not practical due to topographic or environmental concerns. As with any of the requirements in this subpart, an operator

may also request a variance to the off-lease measurement requirements on a case-by-case basis.

One commenter said its liquids-gathering system, which is within the boundary of a CAA, should be exempt from the off-lease measurement requirements of § 3173.22 because this system has been in place for over 10 years, was approved by the BLM, and works well. The BLM did not change the final rule in response to this comment. Instead, the BLM will review existing off-lease measurement approvals associated with CAAs, along with the CAAs themselves, on a case-by-case basis as part of the FMP approval process to ensure consistency with the minimum standards and requirements under § 3173.22 of the final rule.

Several commenters said that the new off-lease measurement requirements will result in more FMPs and that off-lease measurement—because it requires fewer FMPs—provides better accuracy and reduces recordkeeping, allowing multiple wells or pads (in a unit operation) to commingle production at a central tank battery. These commenters asserted that this made it easier for the BLM to track production and audit facilities.

The BLM believes the commenters are confused about the definition of off-lease measurement. The operator can locate an FMP, including a central tank battery as mentioned by the commenters, anywhere within the boundary of a lease, a unit, or a CA from which the production originates without meeting the definition of off-lease measurement and without needing approval from the BLM. Although the requirements for approving a CAA in this rule may increase the number of FMPs required, the BLM does not agree that the off-lease measurement requirements of this rule would have any effect on the number of FMPs required. As noted earlier in discussion of § 3173.15(a) of

the final rule, if off-lease measurement is a feature of a commingling and allocation proposal, then a separate Sundry Notice application for off-lease measurement is not necessary and the off-lease measurement proposal will be considered as part of the CAA request. The BLM expects that this final rule will have a smaller impact than the proposed rule would have had on existing off-lease measurement approvals tied to CAAs because §§ 3173.14(b) and 3173.16(a) of the final rule includes an expanded list of exemptions that allow commingling as well as grandfathering provisions for some existing CAAs.

Finally, a few commenters said that some existing off-lease measurement approvals could be at risk if they do not meet the BLM's conditions for being "in the public interest," as outlined in paragraph (c) of this section. We agree that some existing off-lease measurement approvals may not be in the public interest, and they will therefore be terminated. The public interest generally includes minimizing environmental impacts, achieving maximum ultimate economic recovery, and allowing the BLM to verify volumes and qualities of oil and gas reported on the OGORs. Existing approvals that are merely for the convenience of the operator may not be in the public interest. If, for example, an existing off-lease measurement approval allows the FMP to be located on private land that makes BLM access difficult or impossible, and the approval cannot be justified based on environmental circumstances or achieving maximum ultimate economic recovery, it is likely that the BLM will terminate the approval. The BLM estimates that best management practices and environmental and topographic considerations will outweigh the need to terminate many existing off-lease measurement

approvals or to deny new ones. The final rule was not changed in response to these comments.

Section 3173.23 Applying for off-lease measurement

Section 3173.23 of this final rule establishes the requirements operators must follow when applying for an off-lease measurement approval or amending an existing approval, including required supporting information and related documentation.

One commenter said that this section of the rule is unnecessary and redundant and that the off-lease measurement application and approval process should be part of the APD process. The BLM does not agree that this section is unnecessary and redundant because it establishes the process that operators will use to apply for an off-lease measurement approval, which is entirely separate from and independent of the process the BLM uses to process an APD. However, § 3173.23 does not prohibit operators from submitting new off-lease measurement applications with their APDs. The BLM, in fact, would prefer to receive comprehensive proposals upfront from operators when they submit their APDs because it streamlines the BLM's review process by allowing BLM staff to look at a project in its entirety early in the permitting process.

Section 3173.23(a) requires operators to submit their off-lease measurement application via a Sundry Notice. That Sundry Notice package may be submitted at the same time as, but separately from, an operator's APD package(s) and the BLM will process both applications at the same time. The final rule did not change as a result of this comment.

Several commenters said it would be too burdensome to require operators, whose off-lease measurement facilities are located on non-federally owned surface, to include in

their off-lease measurement applications written concurrence from the surface owners, including from future owners if the ownership changes, as called for in paragraph (e) of the final rule. The BLM does not agree with these commenters. Operators should already be obtaining concurrences from surface owners as part of the APD process as Onshore Order 1 (Approval of Operations) specifically requires operators to make a good faith effort to obtain a Surface Access Agreement from the surface owner. Therefore, this requirement does not place any additional burden on the operator.

In addition, the BLM must have guaranteed access to the off-lease measurement location. Without this guaranteed access, the BLM may not be able to verify or account for the volumes and qualities of oil and gas on which royalty is due and would therefore deny the off-lease measurement request or terminate the existing off-lease measurement approval. No change to the rule was made in response to this comment.

Finally, one commenter said that the proposed rule did not specifically require operators to obtain the written consent of the owner and operator of measurement facilities. As a result, the commenter said, this rule would subject owners and operators of the measurement facility to the jurisdiction of the BLM without its consent or knowledge. The BLM believes that this is a valid concern. However, the BLM did not make a change to the rule in response to this comment because paragraph (e) (paragraph (f) in the proposed rule) already requires operators to obtain written concurrence signed not only by the surface owner(s), but also by the owner(s) of the measurement facilities.

In addition to these changes, the BLM made a few minor administrative changes to final § 3173.23. These clarifications were consistent with the overall changes made to the final rule and were not made in response to any particular comments. The BLM

added a new paragraph (h) to the final rule to clarify that operators, under existing BLM regulations, must obtain approval from the appropriate surface-management agency, if new surface disturbance is proposed for the FMP, and its associated facilities are located on Federal land managed by an agency other than the BLM. The BLM also clarified paragraph (f) to state that an operator needs to submit a right-of-way grant application to the BLM along with the off-lease measurement request only when new surface disturbance is proposed for the FMP and its associated facilities are located on BLM-managed land. If the proposed surface facilities are on Indian land, then paragraph (g) of the final rule requires that a right-of-way grant application must be filed with the appropriate BIA office.

Other changes we made that were unrelated to public comments include modifications to the type of information operators must submit as part of their off-lease measurement application. In paragraph (c)(2) of the final rule, the BLM no longer requires the operator to identify the land description of all wells, pipelines, and other facilities expected to be installed as part of their proposal. Operators need only identify the relative location of such facilities. Paragraph (e) in the proposed rule required submission of a schematic or engineered drawing showing all new facilities that are part of the off-lease measurement proposal. This requirement is no longer in the final rule. Finally, the requirement in paragraph (e) of the proposed rule that called for the submission of a site facility diagram for existing facilities if changes are being proposed to the facility is removed as unnecessary because the requirements related to site facility diagrams for existing facilities are already addressed by § 3173.11. The BLM elected to make these changes consistent with the changes made to the information-submission requirements for

commingling applications under § 3173.15 of the final rule. It is not necessary for the information-collection requirements for commingling applications to be different than the information-collection requirements for off-lease measurement applications.

Section 3173.24 Effective date of an off-lease measurement approval

Section 3173.24 provides that off-lease measurement approvals are effective on the date the BLM issues the approval, unless the BLM specifies a different effective date in the approval. The BLM did not receive any public comments on this provision and did not make any changes to the final rule.

Section 3173.25 Existing approved off-lease measurement

Under this section of the final rule, an existing off-lease measurement approval will be reviewed upon receipt of an operator's request for the assignment of an FMP number to a facility associated with the off-lease measurement approval. Section 3173.25(a) states that the AO reviews the existing off-lease measurement approval for consistency with the minimum standards and requirements in § 3173.22. The AO will notify the operator in writing of any inconsistencies or deficiencies. Under paragraph (b), the operator will have to correct the inconsistencies or deficiencies, provide the additional information that the AO has requested, or request an extension from the AO within 20 business days. If an operator is requesting an extension, they must justify the request by explaining the factors that will not allow the operator to comply within 20 days and provide a timeframe under which the operator can comply.

Under paragraph (c), in connection with approving the requested FMP, the AO may terminate an existing off-lease measurement approval and grant a new off-lease measurement approval with new or amended COAs to make the approval consistent with

the requirements of this rule. In addition, paragraph (c) provides that the existing off-lease measurement approval will continue in effect during any pendency of an appeal of the new off-lease measurement approval. If the operator fails to correct the deficiencies, paragraph (d) provides that the AO may terminate the off-lease measurement approval. If the existing off-lease measurement approval under this section is consistent with the requirements under § 3173.22(e) of the final rule allows that existing off-lease measurement be grandfathered and be part of the operator's FMP approval. Under paragraph (f), if the BLM grants a new off-lease measurement approval, that new approval is effective on the first day of the month following its approval.

Several commenters had concerns with the paragraph (a) requirement that the AO review existing off-lease measurement approvals to determine if they comply with the new off-lease measurement requirements in § 3173.22. These commenters requested that the BLM "grandfather in" existing off-lease measurement approvals. Another commenter said that operators spent countless hours negotiating their existing CAAs, along with their off-lease measurement approvals, with BLM field staff, which resulted in protections for environmentally sensitive areas and accurate measurement of production.

The BLM agrees with the comments as they relate to grandfathered CAAs and included language under § 3173.16(a) that also grandfathers existing off-lease measurement approvals that are included as part of those grandfathered CAAs under § 3173.16(a)(1) or (2).

The BLM does not, however, agree that existing off-lease measurement approvals that are not included in § 3173.16(a) should be grandfathered. As we stated earlier in this preamble, a major goal of this final rule is to ensure that new and existing approvals – be

they for CAAs or off-lease measurement – allow BLM staff to verify that oil and gas are being measured and reported accurately under these approvals. Without the ability to consistently track where and how oil and gas are measured, the BLM cannot be assured that production reporting is accurate. Section 3173.25 sets up a process for the BLM to review existing non-grandfathered off-lease measurement approvals that were granted before the BLM established guidance and standards that ensure such approvals were structured so that BLM staff can verify production reporting.

For existing off-lease measurement approvals that are associated with a non-grandfathered CAA, the CAA would provide the public interest justification for the off-lease measurement approval, whether that is due to economics, protection of the environment, or to achieve maximum ultimate economic recovery. The BLM estimates that more than 95 percent of existing CAAs will be either grandfathered or approved under the provisions of the final rule. Therefore, the only aspect of non-grandfathered off-lease measurement approval that the BLM will be concerned with is the BLM's access to the proposed off-lease measurement location.

Another commenter said that the proposed rule would have required operators to submit all existing off-lease measurement approvals to the BLM for re-approval. The BLM disagrees. This rule does not require operators to submit all existing authorizations to the BLM for re-approval. It does provide that the AO, when an operator submits an application for an FMP number associated with an existing off-lease measurement approval, the AO will review that existing approval for consistency with the minimum standards and requirements for off-lease measurement under § 3173.22 and notify the

operator in writing of any inconsistency or deficiency, or request additional information. No changes to the final rule were made as a result of this comment.

Several commenters were concerned that paragraph (b) gives operators only 20 business days to correct any inconsistencies or deficiencies that the AO identifies with existing off-lease measurement approvals or to provide any additional information the AO requests. The commenters said 20 business days is not enough time to make such corrections and recommended that operators be given 60 to 90 days to fix any problems. One commenter said some operators could be required to reconfigure their pipes in order to maintain their off-lease measurement approvals, which would likely take longer than 20 days to accomplish. Several others said that since this is the first time that the BLM will be reviewing existing CAAs and off-lease measurement approvals for compliance with the new requirements, every commingling facility with off-lease measurement will need some corrective work and operators must be given more than 20 days to bring their operations into compliance if they receive multiple notices.

The BLM believes that some of the commenters have confused the requirements relating to the review of existing off-lease measurement approvals with those relating to the review of existing CAAs under § 3173.16(b). The review of existing off-lease measurement approvals will have nothing to do with allocation methods and will rarely involve any on-the-ground work. The BLM will be concerned with only four issues when reviewing existing off-lease measurement approvals:

1. Does the existing off-lease measurement point only measure production from one lease, unit PA, CA, or CAA?

2. Is the off-lease measurement point reasonably accessible to the BLM for the purpose of production accountability?
3. Is the off-lease measurement approval in the public interest?
4. Does the off-lease measurement occur at an approved FMP?

For the majority of existing off-lease measurement approvals that are associated with a CAA, items 1, 3, and 4 will already be addressed by the CAA. Therefore, the only review the BLM will do is to ensure the off-lease measurement point is reasonably accessible to the BLM. In the rare case where it is not, the BLM may require that the operator either modify the location to make it more accessible to the BLM or, in the most extreme cases, move the measurement facility to a location where it is accessible to the BLM.

Second, in response to these comments, the BLM added language to the final rule that allows an operator to request an extension of the 20-day timeframe. The operator should justify the extension request by explaining the factors that will not allow them to comply within the 20-day timeframe and provide a timeframe under which they can comply.

One commenter objected to a provision in paragraph (c) that allows the AO to impose new or amended COAs on an existing off-lease measurement approval to make the approval consistent with the off-lease measurement requirements in § 3173.22. The commenter was referring to an off-lease measurement approval that is part of an existing CAA. The commenter stated that numerous sales contracts are based on existing approvals and that by changing the approval, gas sales contracts may be at risk of termination. Other commenters expressed concern that new COAs could result in economic burdens that would result in the shut-in of production and loss of Federal or Indian royalty. Other commenters said the new off-lease measurement requirements

would force them to reconfigure gathering lines at sites where existing off-lease measurement agreements were not approved, which would be costly and cause additional environmental impacts that may not be necessary.

The BLM did not make any changes to the rule based on this comment because this has little do with the off-lease measurement approval and much more to do with the CAA approvals, discussed previously in the preamble. As discussed in the portion of this preamble dealing with commingling, the primary concern of the BLM when reviewing existing off-lease measurement approvals that are associated with a CAA is to ensure that the BLM has reasonable access to inspect the off-lease measurement facility. Generally, the only COAs that the BLM would impose on an existing off-lease measurement approval that is associated with a CAA would relate to ensuring BLM access to the FMP. These COAs could include remedies such as obtaining express authorization for the BLM to access the facility in situations where the facility is not located on land managed by the BLM, or in rare cases, moving the measurement facility to a location that does provide the BLM reasonable access. This paragraph further provides that if the operator appeals one or more of the new COAs, the existing off-lease measurement approval will continue during the pendency of the appeal.

The BLM would like to reiterate that most of the existing wells in the San Juan Basin, where surface and downhole commingling are occurring together with off-lease measurement, may be exempt from having to meet the new commingling and related off-lease measurement requirements because they qualify for grandfathering under § 3173.16(a). Section 3173.16(a) grandfathers all existing downhole commingling CAAs and any existing surface CAAs if the average production over the past 12 months is less

than 1,000 Mcf of gas per month, or 100 bbl of oil per month for each lease, unit PA, or CA included in the CAA. In such cases, the associated off-lease measurement approval would also be grandfathered under § 3173.16(a).

Section 3173.26 Relationship of off-lease measurement approval to royalty-free use of production

Section 3173.26 of the final rule clarifies that approval of off-lease measurement does not constitute approval of off-lease royalty-free use of production as fuel in facilities located at an approved off-lease FMP. Under NTL-4A, the lessee or operator may claim royalty-free use only for gas or oil used on the same lease, on the unit for the same unit PA, or on the same CA from which the gas or oil was produced. Thus, the lessee or operator may not claim royalty-free use for any of the production used as fuel at an off-lease FMP, absent BLM approval.

One commenter asked that the BLM define the term "royalty-free use" in this rule. As explained in this preamble with respect to § 3173.1, the BLM does not believe such a change is necessary. The definition of royalty-free use in NTL-4A will control unless and until it is replaced.

Section 3173.27 Termination of off-lease measurement approval

Section 3173.27(a) of the final rule provides that the BLM may terminate an off-lease measurement approval for any reason. By way of illustration, this paragraph identifies certain circumstances under which the BLM might exercise that authority – such as changes in technology, regulation, or BLM policy; operator non-compliance with the terms or conditions of the off-lease measurement approval; or operator non-compliance with §§ 3173.22 through 3173.26. Under paragraph (b), the BLM will notify the

operator in writing of the effective date of the termination and any inconsistencies or deficiencies with the operator's approval that serve as the reason(s) for the termination. Upon receipt of the BLM's notice, the operator will have 20 business days to correct any inconsistencies or deficiencies, or provide any additional information the AO requests. Paragraph (b) also provides an opportunity for an operator to request an extension of time from the AO within 20 business days after receipt of the BLM's notice, or the off lease measurement approval terminates.

Paragraph (c) provides that an operator may terminate an off-lease measurement approval by submitting to the BLM a Sundry Notice, which must identify the new FMPs for the lease(s), unit PA(s), or CA(s) previously subject to the off-lease measurement approval. Under paragraph (d), each lease, unit PA, or CA that was subject to the off-lease measurement approval may require a new FMP number(s) or a new off-lease measurement approval. Operators will have up to 30 days to apply for a new FMP number or off-lease measurement approval, whichever is applicable. While the BLM processes the application for a new FMP number or off-lease measurement approval, the operator may continue to use the existing FMP number.

The BLM received several comments on this section of the proposed rule, one of which expressed concern that proposed § 3173.27 did not provide an explicit timeframe or process for the BLM to terminate off-lease measurement approvals or for operators to correct the inconsistencies or deficiencies that led to the termination. This commenter recommended that the BLM give operators 9 months to correct their inconsistencies or deficiencies before terminating their approvals. Several other commenters objected to paragraph (a) of the final rule (paragraph (b) of the proposed rule), which authorizes the

BLM to terminate an off-lease measurement approval for any reason. One commenter stated that some gas sales contracts involving gathering systems are based on having off-lease measurement approvals and CAAs and that if the BLM terminates the off-lease measurement approval, the operator will no longer be able to sell gas into the gathering system. The commenter stated that operators need to have some confidence that the existing off-lease measurement approval will allow continued operations as long as the operator follows the COA for the off-lease measurement approval. If there are issues to be resolved, the operator should be given a reasonable time to resolve the issues.

The BLM agrees in part with these comments and made several changes to the final rule in response. Under revisions to final paragraph (b), the BLM's notification letter will describe the inconsistencies or deficiencies in the operator's existing off-lease measurement approval that will result in the termination, and state the effective date of the termination. The revisions also give the operator 20 business days from receipt of the letter to correct the inconsistencies or deficiencies identified by the BLM, provide more information, or request an extension of time from the AO in order to avoid termination. The BLM does not agree with a 9-month timeframe as recommended by one commenter because unique circumstances may warrant different timeframes. If an operator believes that correcting the inconsistencies or deficiencies will take longer than 20 days, it may request a reasonable extension of time from the AO in order to make any necessary corrections.

The BLM received several comments on paragraph (d) of the proposed rule. Proposed paragraph (d) said that if an off-lease measurement approval is terminated, each lease, unit PA, or CA subject to the approval reverts to measurement on the respective lease,

unit, or communitized area. Commenters said that this requirement should not apply to gathering systems that were installed with BLM approval for the purpose of off-lease measurement. If such an approval were terminated, commenters said, the gathering system could no longer transport gas to the sales meter that is off-lease and wells connected to the gathering system would likely be shut in or plugged as they could no longer sell their gas. The new on-lease measurement system would not be connected to a gas sales line as well, the commenter said. The commenter recommended that the BLM delete the whole section from the final rule.

The BLM disagrees with this comment and did not make any changes to the final rule as a result. The commenter's concern principally relates to the underlying CAA approval, not to the off-lease measurement approval itself. The BLM's primary concern with off-lease measurement approvals that are tied to a CAA is the BLM's access to the off-lease FMP for the purpose of inspection and production accounting. For off-lease measurement approvals that are not tied to a CAA, § 3173.22(c) allows the BLM to consider an operator's ability to achieve maximum ultimate economic recovery from a lease, unit PA, or CA in determining whether it is in the public interest to approve off-lease measurement. This provision gives the BLM the leeway it needs to exempt leases, unit PAs, or CAs from the off-lease measurement requirements in situations where denial of off-lease measurement might result in shut-ins.

Section 3173.28 Instances not constituting off-lease measurement, for which no approval is required

Section 3173.28 of the final rule identifies two circumstances that will not be considered off-lease measurement for purposes of the rule. The first is where an FMP is

located on a well pad of a directionally drilled well that produces oil or gas from a lease, unit, or CA on which the well pad is not located. The second is where a lease, unit, or CA is made up of separate non-contiguous tracts. If production is moved from one tract to another tract within the same lease, unit, or CA, and the production is not diverted during movement between the tracts before the FMP (except for production used royalty-free), measurement would not be considered to be off-lease.

Several commenters were under the impression that they would need off-lease measurement approval for horizontal and directionally drilled wells where the well pad itself is located off the lease, CA or unit. Under paragraph (a), off-lease measurement approval for such wells is not needed, unless the FMP is also located off of the well pad, regardless of distance. If any of the facilities are located on non-federally owned surface, the operator will still need to obtain written concurrence signed by the surface owner(s), and the operator(s) of the measurement facilities that grants the BLM unrestricted access to the off-lease measurement facility and the surface on which it is located, in order to conduct production verification inspections. The BLM did not make any changes to the rule based on this comment.

One commenter said that, in some cases, there may by reasons to locate the FMP near, but not actually on, the well pad, triggering the need for the operator to obtain off-lease measurement approval. The commenter stated that if the FMP is located a small distance off the well pad, but clearly serves the wells on the pad this should not require an off-lease measurement approval. The BLM disagrees with this comment and did not make any changes to the rule as a result. Paragraph (a) of this section clearly states that the FMP must be located on the well pad to avoid the need for an off-lease measurement

approval. Normally, well pads are clearly delineated in the field by a berm, fence, or other easily-identifiable feature. This makes the requirement clear, objective, and enforceable. Adding a provision that would, as suggested by the commenter, include FMPs that are only a short distance off the well pad would render the provision subjective and unenforceable. If the operator can demonstrate that locating the FMP a small distance off the well pad is in the public interest and that the BLM has guaranteed access to inspect the FMP, then the BLM would approve off-lease measurement.

Another commenter suggested that the BLM add a paragraph to this section that states gas used for fuel at locations that are not considered to be "off lease" under paragraphs (a) and (b) of this section qualifies as royalty-free usage. The BLM did not make any changes to the rule based on these comments because what qualifies as royalty-free use is outside the scope of this rulemaking.

Section 3173.29 Immediate assessments for certain violations

Section 3173.29 expands the number and types of violations that would be subject to immediate assessments. Immediate assessments are not civil penalties and are separate from the civil penalties authorized under Section 109 of FOGRMA, 30 U.S.C. 1719. Unlike the proposed rule, the final rule does not subject purchasers and transporters to immediate assessments – only operators. For violation 7, non-retention of records necessary to determine quantity and quality of production, the final rule clarifies that the applicable regulation is § 3170.7, not § 3173.9(a)(1) and (2). Also, the final rule clarifies that violation 8 could result in an immediate assessment if operators fail to "apply for," rather than "obtain," the required FMP approval.

With respect to violations 9, 10, and 11, which pertain to approvals for off-lease measurement and surface or downhole commingling, respectively, the final rule clarifies that removing production from a facility that begins operation after the effective date of the final rule, prior to receiving BLM approval for off-lease measurement or commingling, could result in an immediate assessment. If the facility will be servicing new wells not yet drilled, as well as existing wells already in production, then the existing wells must use their respective existing FMP numbers when reporting production to ONRR's OGOR until the BLM assigns the new FMP number associated with its off-lease measurement or commingling approval.

An existing facility (i.e., one in service on or before the effective date of the final rule) would be subject to an immediate assessment if it engaged in off-lease measurement or commingling without an existing BLM approval. Under such circumstances, the BLM could issue an immediate assessment for each applicable lease, unit PA, or CA, since off-lease measurement or commingling without approval is a violation of this final rule and existing BLM requirements under 43 CFR 3162.7-2 and 3162.7-3, both of which require BLM approval before operators store or measure production from a Federal or Indian lease off-lease.

Some commenters argued that these immediate assessments are inconsistent with due process because there is no opportunity for an operator to correct its violations before an assessment is imposed. To the contrary, the use of immediate assessments for breaches of the oil and gas operating regulations is well established and is consistent with the notice requirements of due process. Operators obligate themselves to fulfill the terms and conditions of the Federal or Indian oil and gas leases under which they operate. These

leases incorporate the BLM's regulations by reference. Thus, the immediate assessments contained in the regulations act as "liquidated damages" owed by operators who have breached their leases by breaching the regulations. See, e.g., *M. John Kennedy*, 102 IBLA 396, 400 (1988). Operators are expected to know the obligations and requirements of the Federal or Indian oil and gas lease under which they operate; additional notice is not required.

Several commenters said there could be instances when an operator is not aware that a violation exists. One commenter said the assessment should be imposed only if the violation was a willful or knowing act of noncompliance. Another commenter suggested the BLM place a Federal seal and notify the operator of the violation instead of issuing an immediate assessment for something that they are not aware of or that might be beyond their control. The BLM disagrees with these comments. Operators have a responsibility to inspect their properties to ensure site security, consistent with all applicable regulations, including this final rule. The violations outlined in this section of the final rule all have substantial adverse impacts on production accountability or royalty income and, thus, the BLM believes the assessments are warranted. No changes to the rule were made in response to these comments.

Numerous commenters said that the increases in the number of immediate assessments related to producing operations, from 1 to 11, and in the dollar amount of the assessments, from $250 to $1,000, are unreasonable. The number of immediate assessments was expanded to include violations that pose particular threats to the integrity of the BLM's production accounting system and that significantly increase the BLM's workload and enforcement costs. The increase to $1,000 is justified because it

generally approximates what it will cost the agency, on average, to identify and document a violation and verify remedial action and compliance.

Commenters objected to this section of the proposed rule subjecting purchasers and transporters to immediate assessments. One said that purchasers and transporters should not be involved in retaining records pertaining to the quality and quantity of production. Another commenter said that oil and gas lease agreements are a contract between the government and lessees and that purchasers and transporters are not a party to those agreements and, therefore, should not be subject to these assessments. Other commenters argued that the proposed immediate assessments on purchasers and transporters exceeded the BLM's statutory authority under FOGRMA. Upon consideration of these arguments, and further review and analysis of FOGRMA and other authorities, the BLM has removed the immediate assessments on purchasers and transporters from final § 3173.29.

Enforcement Actions

As explained in the proposed rule, the final rule removes the enforcement, corrective action, and abatement period provisions of Order 3. In their place, the BLM will develop an internal Inspection and Enforcement Handbook that will provide direction to BLM inspectors on how to classify a violation – as either major or minor – what the corrective action should be, and what the timeframes for correction should be. The AO will use the Inspection and Enforcement Handbook in conjunction with 43 CFR subpart 3163, which provides for assessments and civil penalties when lessees and operators fail to remedy their violations in a timely fashion, and for immediate assessments for certain violations.

As previously discussed in the proposed rule, the final rule allows the BLM to make a case-by-case determination of the severity of a violation, based on applicable definitions

in the regulations. In deciding how severe a violation is, BLM inspectors must take into account whether a violation could result in "immediate, substantial, and adverse impacts on public health and safety, the environment, production accountability, or royalty income." (Definition of "major violation," 43 CFR 3160.0-5.) Under the existing definition of "major violation," which is not being revised as part of this rulemaking, the same violation could be major or minor, depending on the context.

Several commenters objected to the BLM using internal guidance or the Inspection and Enforcement Handbook to address violations, assessments for noncompliance, and corrective actions. Commenters argued that the use of internal enforcement guidance is inconsistent with the APA and that these guidance documents constitute substantive rules that must be developed through notice-and-comment rulemaking. These comments misunderstand the nature of the Internal Inspection and Enforcement Handbook that the BLM will develop. The Handbook will not establish new obligations to be imposed on the regulated community in a manner that will improve consistency in how those BLM personnel excise there discretion in applying existing regulations and addressing instances of non-compliance. Those obligations are spelled out in applicable regulations, orders, and permits, as well as the terms and conditions of leases and other agreements. Rather, the Handbook will provide guidance to BLM personnel as to how to apply the existing regulations and address instances of non-compliance. The overarching enforcement infrastructure of 43 CFR subpart 3163 remains in effect, and the definitions of "major violation" and "minor violation" in § 3160.0-5 remain unchanged. It is these duly promulgated regulations (among other authorities), and not the Inspection and Enforcement Handbook, that will provide the legal basis for the BLM's enforcement

actions; the BLM's enforcement actions must be consistent with these regulations irrespective of what may be contained in its Inspection and Enforcement Handbook. It is not necessary for the BLM to develop its Handbook—which does not expand the BLM's authorities or impose binding obligations on the regulated community—through notice-and-comment rulemaking.

The commenters requested that the BLM use a transparent process to develop this internal guidance and that operators be given the opportunity to comment on it. The BLM did not accept these comments; however, the BLM will post the Inspection and Enforcement Handbook on the BLM website after it is developed and finalized.

Elimination of Self Inspections

Consistent with the proposed rule, this final rule eliminates the self-inspection provision of Order 3, section III.F., because it has been impractical for the BLM to enforce. Under the self-inspection program, operators were supposed to establish a program for the purpose of periodically measuring production volumes and assuring they were complying with the BLM's minimum site security requirements. But, as discussed earlier in response to comments on this topic during the discussion of § 3173.8, the Order 3 requirements were vague and the BLM never supplemented them with internal guidance or enforcement policy. As a result, the BLM determined that this requirement was of limited utility.

Nonetheless, the BLM received a comment that recommended that instead of removing the requirement, the language should be improved to ensure that an inspection program is established for periodically measuring production volumes and ensuring compliance with the BLM's site security requirements from Order 3. The BLM disagrees with this

comment and did not make a change in response. In lieu of reworking or updating this requirement, the final rule strengthens recordkeeping requirements for operators, including for transporters and purchasers, which the BLM believes will ultimately accomplish the same results and be more useful going forward. It should also be noted that although the self-inspection requirement from Onshore Order 3 has been eliminated, the actions that an operator, transporter, or purchaser must take to conduct periodic production volume inspections and ensure site security have been incorporated into this final rule as required elements under §§ 3173.2 through 3173.10 of the final rule.

General comments

The BLM received a few comments that were general in nature and do not necessarily relate to a specific provision of the rule.

A number of comments argued that the rule is impermissibly "retroactive." These comments argued that the rule is retroactive because it will apply to wells, facilities, and authorizations that existed before the rule's effective date. While the BLM agrees that retroactive regulations raise special legal concerns, those concerns are not implicated here because this rule is not a retroactive regulation. The comments misunderstand the nature of the "retroactive" regulations that the law disfavors. "A law does not operate 'retrospectively' merely because it is applied in a case arising from conduct antedating the statute's enactment or upsets expectations based in prior law." *Landgraf v. USI Film Prods.*, 511 U.S. 244, 269 (1994) (internal citations omitted). Rather, the test for retroactivity is whether the new regulation "attaches new legal consequences to events completed before its enactment." *Id.* at 270. The rule at hand does not attach any new legal consequence to the operation of existing wells and facilities prior to the rule's

effective date. As the U.S. Court of Appeals for the D.C. Circuit has explained, the fact that a change in the law adversely affects pre-existing business arrangements does not render that law "retroactive:"

> It is often the case that a business will undertake a certain course of conduct based on the current law, and will then find its expectations frustrated when the law changes. This has never been thought to constitute retroactive lawmaking, and indeed most economic regulation would be unworkable if all laws disrupting prior expectations were deemed suspect.

Chemical Waste Mgmt., Inc. v. EPA, 869 F.2d 1526, 1536 (D.C. Cir. 1989). Thus, despite the fact that this rule may require operators to update or modify their existing wells, facilities, and authorizations, the rule is nonetheless prospective—not retroactive—in nature.

A couple of comments expressed that the BLM was employing discriminatory regulation, and gave as their examples the inequality of producers, operators, and transporters in regard to equity interest in production. The proposed rule would treat producers, operators, and transporters equally even though some of these parties (specifically transporters) have no ownership interest in the oil and gas product generated from Federal or Indian lands. Because they have no interest, it is most likely that the costs they incur will be passed directly on to equity holders, commenters said. Over time, the commenter asserted, because equity holders may deduct transportation costs from royalties owed, this may result in reduced royalty payments for both the government and the tribes. While the BLM recognizes the possibility of some pass through of compliance costs from purchasers and transporters to operators, based on its analysis of the costs of this final rule, it does not believe those costs will be significant. Additionally, this change is consistent with the provisions of FOGRMA, which addresses responsibilities

and duties of operators, purchasers, and transporters. By statute, Congress applied these legal requirements to those parties equally.

One commenter pointed out that the regulations fail to recognize the current industry business models, as it pertains to Master Limited Partnerships. Unlike C Corporations, MLPs have no mechanism for capitalizing the required changes and will be forced to expense the cost. This passes the cost immediately to unit holders. The commenter recommended that the BLM remove MLPs from the regulation. The BLM did not understand this comment in the context of this rule. Under the applicable statutes and regulations operators, purchasers, and transporters are subject to the regulations governing operations on a Federal or Indian (except Osage Tribe) lease. The underlying corporate structure of those entities has no bearing on their duty to comply with these requirements.

Many commenters questioned whether the BLM has the resources to implement this and other rules that it has finalized, or will finalize in the coming months, for example the new hydraulic fracturing regulations, which went into effect on June 24, 2015 (currently enjoined by order of the District Court of Wyoming), and the proposed Waste Prevention, Production Subject to Royalties, and Resource Conservation proposed rule, which published on February 8, 2016 (85 FR 6616). Commenters stated that the BLM does not have enough staff to enforce its existing regulations, let alone new ones. Commenters also said that the cumulative economic impact of this final rule should be analyzed together with the economic impacts of the final rules that are updating and replacing Orders 4 and 5.

The BLM does not agree with these comments. Most of the requirements in this final rule are not new -- they codify existing requirements that are found in Order 3 or they are standard industry practices that most operators, transporters, and purchasers already follow. Those requirements that are new have been added for two reasons: (1) To give operators the flexibility to use new technology, which could, in the long run, reduce costs for both industry and the BLM; and (2) To address production accountability and site security concerns raised by governmental oversight bodies, such as the Subcommittee, the GAO, and the OIG. The BLM did not change the final rule as a result of these comments.

One commenter stated that the regulations should consider laws and lease provisions that apply only in Alaska, and should more clearly provide for balancing measurement accuracy and environmental considerations. According to the commenter, these laws and lease provisions impose heightened restrictions on development in Alaska with which the site security regulations, in particular the requirements for additional measurement facilities, would conflict. The BLM does not agree with the commenter that changes to the rule are necessary. To the extent trade-offs between measurement accuracy and environmental considerations are appropriate, the BLM has already addressed those issues in the rule - see e.g., the discussion of considerations that go into reviewing requests for off-lease measurement or commingling approvals. Additionally, whether the final rule requires additional facilities is facility-specific. Moreover, as explained throughout this preamble and the associated EA, the BLM expects that, to the extent the final rule requires the construction of new facilities on a lease, the relocation of existing facilities onto a lease, or the retrofitting of existing facilities on a lease, it would likely be

done on surfaces that have already been disturbed. Thus, the BLM does not believe that this rule will result in the significant "footprint" expansion the commenter identified. Furthermore, should compliance with a requirement of this rule necessitate surface disturbance inconsistent with applicable laws or lease terms, the operator may, through the PMT or under § 3170.6, as applicable, seek approval of an alternative means of compliance that would meet the objectives of that requirement.

Miscellaneous changes to other BLM regulations in 43 CFR part 3160

As noted at the beginning of this Section-by-Section discussion, the BLM has made other changes to provisions in 43 CFR part 3160. Some of those have already been discussed above in connection with provisions of this final rule to which they relate. The remaining revisions are those noted here.

1. The authority citation for part 3160 is corrected to include 25 U.S.C. 396, the grant of rulemaking authority to the Secretary for allotted Indian leases, which does not appear in the current print edition of the CFR. The BLM did not receive any comments on this change.

2. Section 3160.0-3, Authority, is updated to include the amendments to the Federal Oil and Gas Royalty Management Act of 1982 enacted by the Federal Oil and Gas Royalty Simplification Act of 1996. The BLM did not receive any comments on this change.

3. Section 3161.1, Jurisdiction, is updated to include references to FMPs, the Indian Mineral Development Act, and Tribal Energy Resource Agreements. To see the BLM's response to public comment on these changes, please see the discussion of related changes to § 3170.2 earlier in this preamble.

4. Section 3162.3-2 is revised by adding a new paragraph (d), which refers operators to provisions in subpart 3173 for details on how to apply for approval of FMPs, surface or subsurface commingling from different leases, unit PAs and CAs, or off-lease measurement. The BLM did not receive any comments on this change.

5. Section 3162.4-1, Well records and reports, is amended in a number of respects by this final rule. Consistent with the proposed rule, this final rule revises paragraph (a) to make clear that the new recordkeeping requirements also apply to "source records" that are relevant to "determining and verifying the quality, quantity, and disposition of production from or allocable to Federal or Indian leases." Similarly, paragraph (d) has been revised to establish the new records-retention period established by the 1996 amendments to FOGRMA, and mirror for part 3160 the provisions in paragraphs (c) through (e) of § 3170.7 of the final rule. A new paragraph (e) lists those "record holders" who would be subject to the new recordkeeping requirements. This section also makes clear that all record holders must maintain their records when directed by the Secretary, or his/her designee, in cases where there is a judicial proceeding or demand involving such records. In this section of the previous rule, the Secretary, or his/her designee, could direct record holders to maintain their records only in cases where there was an audit or investigation.

6. Section 3162.4-3, the provisions regarding the no-longer-used Form 3160-6 (the monthly report of operations), is removed. The BLM did not receive any comments on this change.

7. Section 3162.6, Well and facility identification, is revised to correct the misspelled word "indentification" in paragraph (a) to read "identification." Paragraph (b) is revised

to remove a provision allowing abbreviated sign designations and a "grandfathering" provision for old well signs. Paragraph (c) is revised to extend signage requirements to include facilities at which oil or gas produced from Federal or Indian leases is stored or processed. The fifth sentence of the current paragraph (c) becomes the new paragraph (d), with its wording revised. The current paragraph (d) is now paragraph (e). The BLM did not receive any comments on this change.

8. Section 3162.7-1, Disposition of production. This final rule removes paragraph (f), which currently refers to a 6-year retention period, since the initial statutory retention period for records concerning Federal leases is now 7 years. The BLM opted not to retain paragraph (f) because this retention period is already prescribed §§ 3162.4-1 and 3170.7 of the final rule. The BLM received no comments on this proposed change and did not make any changes from the proposed rule to the final rule.

9. Section 3162.7-5, Site security on Federal and Indian (except Osage Tribe) oil and gas leases, has been removed. The provisions in the final rule that correspond to, or cover the same subject matter as, the several paragraphs in § 3162.7-5 are shown in the following table:

43 CFR 3162.7-5 paragraph	Final new provision
(a) Definitions	43 CFR 3173.1
(b)(1) Lines and valves; effective sealing	43 CFR 3173.2(a), 3173.9(b) and 3173.11(c)(7)
(b)(2) LACT meters and effective sealing of components	43 CFR 3170.4, 3173.3, and two sections in anticipated new subpart 3174
(b)(3) By-passes around meters	43 CFR 3170.4
(b)(4) Sealing of appropriate valves during oil measurement by hand gauging	43 CFR 3173.2(a) and (b)

(b)(5) Circulating lines with valves allowing access to remove oil from storage tanks	43 CFR 3173.1
(b)(6) Records retention requirements	43 CFR 3170.7
(b)(7) Removal of oil for transportation by vehicle and required documentation	43 CFR 3173.5
(b)(8) Reporting theft or mishandling of oil	43 CFR 3173.8
(b)(9) Variances	43 CFR 3170.6
(c) Site security plans	None (site security plans eliminated)
(d) Site facility diagrams	43 CFR 3173.11

10. Section 3163.2, Civil penalties, is rewritten in several respects by this final rule. The changes being made to this section as part of this rule are a combination of the changes proposed as part of this rulemaking effort and the proposed rule to update and replace Order 5 (80 FR 61645). In addition, following the publication of those proposed rules, but prior to the publication of this rule, the BLM published an interim final rule - Onshore Oil and Gas Operations--Civil Penalties Inflation Adjustments (81 FR 41860) – that made adjustments for inflation to all of the daily civil monetary penalty maximums found in § 3163.2. The adjustments made by the interim final rule were required by the Federal Civil Penalties Inflation Adjustment Act Improvements Act of 2015 (Sec. 701 of Pub. L. 114-74).

The BLM is making the following additional changes to § 3163.2 in this final rule. These changes are not a result of the Federal Civil Penalties Inflation Adjustment Act Improvements Act.

First, the BLM is amending the civil penalty regulations to reflect the fact that purchasers and transporters who fail to maintain and submit records as required by the BLM can be subject to civil penalties under Section 109 of FOGRMA (30 U.S.C. 1719). As explained in the proposed rule, this change is being made because the BLM's existing regulations do not reflect this longstanding statutory authority. In order to effectuate this change the BLM is designating the first sentence of paragraph (a) of the existing § 3163.2 as paragraph (a)(1), and adding a new paragraph (a)(2) that reads as follows:

(2) Whenever a purchaser or transporter who is not an operating rights owner or operator fails or refuses to comply with 30 U.S.C. 1713 or applicable rules or regulations regarding records relevant to determining the quality, quantity, and disposition of oil or gas produced from or allocable to a Federal or Indian oil or gas lease, the authorized officer will notify the purchaser or transporter, as appropriate, in writing of the violation.

The second sentence of the existing paragraph (a) (pertaining to the maximum amount of the penalty if the violation is not corrected within 20 days of the date of notice) is redesignated as paragraph (b)(1). The existing paragraph (b) (pertaining to the maximum amount of the penalty if the violation is not corrected within 40 days of the date of notice) is redesignated as paragraph (b)(2).

The BLM received a number of comments asserting that it was unfair to subject purchasers and transporters to the civil penalties under the onshore oil and gas regulations because purchasers and transporters often do not have control over the information provided by operators. The BLM does not agree with these comments. As explained above, this change is being driven primarily by longstanding statutory requirements. Additionally, it should be noted that there are instances where the purchaser or

transporter actually owns the oil and gas delivery point, and therefore has control of much of the relevant information. With respect to concerns about the accuracy of information provided by an operator to a purchaser or transporter, while entities are generally responsible for the content of their records, the BLM recognizes that such a situation (i.e., inaccurate information provided by an operator) would be a factor that could be considered in an enforcement action on a case-by-case basis.

In addition to the changes identified above, the BLM is also revising paragraphs (a)(1) and (b)(1) to refer to "any person" and "the person," respectively, rather than limiting the applicability of civil penalties to an operating rights owner or operator. This change is consistent with the statutory language found in Section 109(a) of FOGRMA (30 U.S.C 1719(a)). It also clarifies that potential penalty liability exists for parties who contract with operating rights owners or operators to perform activities on Federal or Indian leases and who violate applicable regulations, statutes, permits, or lease terms in performing those activities. While the operating rights owner or operator is responsible (and liable for penalties) for violations committed by contractors, the contractors are also themselves subject to the requirements of certain statutes, regulations, permits, and lease terms. The BLM is revising the regulations in this manner in order to enable the agency to hold contractors directly responsible for violations they commit.

In addition, this rule also removes the regulatory caps on civil penalty assessments found in the current regulations paragraphs (b) (paragraph (b)(2) in the final rule), (d), (e), and (f). As explained in the proposed rule to update and replace Order 5 (80 FR 61645), this change is based on comments received on an Advance Notice of Proposed Rulemaking (ANPR) (80 FR 22148) that sought input on a variety of issues related to the

onshore oil and gas program, including whether the regulatory civil penalty caps should be removed. The ANPR explained that these caps are not required by statute, and that in the BLM's view they impose a limit on the total penalties that may be assessed that do not seem reasonable in the modern oil and gas context where it can cost $5 to $10 million dollars to drill a well.

As the BLM explained, it does not believe that the existing regulatory caps provide an adequate deterrence for unlawful conduct, particularly drilling on Federal onshore leases without authorization and drilling into leased parcels in knowing and willful trespass. Similar concerns were expressed by the Department's OIG in a report, dated September 29, 2014 – Bureau of Land Management, Federal Onshore Oil & Gas Trespass and Drilling Without Approval (No. CR-IS-BLM-0004-2014). In that report, the OIG specifically questioned the adequacy of the BLM's policies to deter such activities and recommended that the BLM pursue increased monetary fines. Based on the foregoing, the final rule rewrites paragraphs (b) (paragraph (b)(2) in the final rule), (d), (e), and (f) accordingly, to remove the regulatory caps, while maintaining the statutory limits imposed on the amount that may be assessed on a daily basis (30 U.S.C. 1719(a)-(d)), as amended by the BLM's recent interim final rule adjusting those amounts for inflation.

Due to the removal of the regulatory civil penalty caps, the BLM determined that paragraph (j) is unnecessary given that its requirements would have tiered off the expiration of those caps. As a result, this rule removes paragraph (j). The BLM is also deleting all of paragraph (g). The existing requirements of paragraph (g)(1) and (g)(2)(iii), which require initial proposed penalties to be at the maximum rate, are being removed because they are inconsistent with subsequent judicial and administrative

decisions regarding the computation and setting of penalties. The BLM also determined that the requirements in paragraph (g)(1) and (g)(2)(iii) (establishing caps on a per operating rights owner or operator per lease) are inconsistent with the BLM's removal of regulatory caps on penalties found in paragraphs (b) (paragraph (b)(2) in the final rule), (d), (e), and (f). With respect to paragraphs (g)(2)(i) and (g)(2)(ii), the BLM is removing the additional notice procedure and corrective period for minor violations required under those paragraphs because it does not believe those provisions are necessary. The BLM's regulations governing oil and gas operations are clear, and provide more than adequate notice of what is required, making additional notification requirements unnecessary and administratively inefficient. As a result, this rule removes all of paragraph (g) and redesignates existing paragraph (i) as (g). Existing paragraph (h) is unaffected by this rule.

Finally, the BLM is moving the substance of existing paragraph (k), which requires the revocation of a transporter's authority to remove crude oil produced from, or allocated to, any Federal or Indian lease if it fails to permit inspection for required documentation under 43 CFR 3162.7-1(c)), to paragraph (d) in order to streamline the regulations. As a result, paragraph (k) is removed as part of this rule.

One commenter on the proposed rule to replace Order 5 objected to the BLM's expansion of the civil penalty provision to "purchasers and transporters" and to the change to "any person," instead of retaining the existing language that limited § 3163.2 to the operating rights owner or operator. That commenter contended that the BLM lacked authority to impose liability on contractors undertaking activities on a Federal or Indian lease. The BLM disagrees with this comment because this change is consistent with

Section 109(a) of FOGRMA (30 U.S.C 1719(a)), which states that “any person” who violates the mineral leasing laws, any rule or regulation issued under those laws, or the terms of any lease or permit shall be liable for civil penalties.

The BLM also heard a range of opinions on the removal of the regulatory civil penalty caps. Some commenters contended that the provisions would result in the imposition of penalties that are excessive, while others supported the change. As explained early in this section, the existing regulatory caps on civil penalties result in maximum penalties that are small relative to the costs of drilling a modern oil and gas well such that the potential deterrent effect of civil penalties is limited. For example, the maximum penalty that could be assessed under existing paragraph (b) is $600,000, which is only 10 percent of the cost of drilling a typical well, which is potentially insufficient to act as a deterrent to non-compliance.

Finally, several commenters suggested that the BLM amend the proposed regulations to require that any time a purchaser, transporter, or contractor receives an INC, a copy be provided to the operating rights owner. The BLM agrees with commenters that adequate notice of potential violations is important; however, it determined that such changes are unnecessary. By existing policy and practice, the BLM addresses INCs to the party who is the subject of the action and does not believe it is appropriate to automatically copy unrelated third parties. Additionally, the regulations already require that if a party is going to be subject to such penalties, it has to receive notice in writing first from the BLM. Thus, under the scenarios identified by the commenters, if they were going to be penalized they would have to first receive a written notice from the BLM identifying the violation(s) in question.

11. Section 3164.1, Onshore Oil and Gas Orders, is revised to remove the reference to Order No. 3, Site Security, from the table in paragraph (b) because the Order is now replaced by this codified final rule.

12. Section 3165.3, Notice, State Director review and hearing on the record, is rewritten in several respects by this final rule. Specifically, consistent with the changes to § 3163.2 and the proposed rule, this rule amends the notice requirements of the existing regulations at 43 CFR 3165.3 to include a provision regarding notice to a purchaser or transporter (who is not an operating rights owner or operator) of a failure to comply with records maintenance or production requirements. This final rule also adopts the changes proposed as part of the Order 5 rulemaking to revise this section to clarify that any person, not just "an operating rights owner or operator" (as previously provided for in paragraph (a)(1)), is subject to a written notice or order of they fail to comply with any provisions of the lease, the regulations in this part, applicable orders or notices, or any other appropriate order of the authorized officer.

In addition, the BLM has also divided the several sentences of the existing paragraph (a) into numbered paragraphs (a)(1) through (a)(7) and added clarifying, nonsubstantive revisions throughout the section. After the first sentence, which has been redesignated as paragraph (a)(1) (and rephrased into active voice), the BLM has added a new paragraph (a)(2) as follows:

> "(a)(2) Whenever any purchaser or transporter, who is not an operating rights owner or operator, fails or refuses to comply with 30 U.S.C. 1713 or applicable rules or regulations regarding records relevant to determining the quality, quantity, and disposition of oil or gas produced from or allocable to a Federal or

Indian oil or gas lease, applicable orders or notices, or any other appropriate orders of the authorized officer, the authorized officer will give written notice or order to the purchaser or transporter to remedy any violations."

In addition, the second and third sentences of existing paragraph (a) are redesignated as paragraph (a)(3), and the fourth, fifth and sixth and seventh sentences are redesignated as paragraphs (a)(4) through (a)(7). The BLM did not receive any comments on these changes and as a result did not make any further changes in this final rule.

III. Overview of Public Involvement and Consistency with GAO Recommendations

Public Outreach

The BLM conducted extensive public and tribal outreach on this rule both prior to its publication as a proposed rule and during the public comment period on the proposed rule. Prior to the publication of the proposed rule, the BLM held both tribal and public forums to discussion potential changes to the rule. In 2011, the BLM held three tribal meetings in Tulsa, Oklahoma (July 11, 2011); Farmington, New Mexico (July 13, 2011); and Billings, Montana (August 24, 2011). On April 24 and 25, 2013, the BLM held a series of public meetings in Washington, D.C., to discuss draft proposed revisions to Orders 3, 4, and 5. The meetings were webcast so tribal members, industry, and the public across the country could participate and ask questions either in person or over the Internet. Following those meetings, the BLM opened a 36-day informal comment period, during which 13 comment letters were submitted. The comments received during that comment period were summarized in the preamble for the proposed rule (80 FR 58952).

The proposed rule was made available for public comment from September 30, 2015, through December 14, 2015. During that period, the BLM held tribal and public meetings

on December 1 (Durango, Colorado), December 3 (Oklahoma City, Oklahoma), and December 8 (Dickinson, North Dakota). The BLM also held a tribal webinar on November 19, 2015. In total, the BLM received 106 comment letters on the proposed rule, the substance of which are addressed in the Section-by-Section analysis of this preamble.

Consistency with GAO Recommendations

As explained in the background section of this preamble, three outside independent entities – the Subcommittee, the OIG, and the GAO – have repeatedly found that the BLM's oil and gas measurement rules do not provide sufficient assurance that operators pay the royalties due. Specifically, these groups found that the BLM needed updated guidance on oil and gas measurement technologies, to address existing technological advances, as well as technologies that might be developed in the future. These groups have all found that the BLM's existing guidance is "unconsolidated, outdated, and sometimes insufficient," and more specifically with respect to Order 3, that:

- There was no uniform means of tracking all onshore meters, including information about meter location, identification number, and owner;
- Some BLM State offices have issued their own guidance, which lacks a national perspective; more specifically there were concerns about the lack of uniform national guidance with respect to the review and approval of commingling and off-lease measurements requests; and
- There was insufficient information collected with respect to on-lease royalty-free use.

The final rule addresses these recommendations by establishing uniform national guidance governing the review and approval of FMPs, CAAs, and off-lease measurements. It also requires operators to provide more information about royalty-free use. The provisions of the final rule specifically address modern oil industry practices with respect to each of these, while also updating relevant documentation and recordkeeping requirements in order to ensure that all production is properly accounted for.

IV. Procedural Matters

Executive Orders 12866 and 13563, Regulatory Planning and Review

Executive Order 12866 provides that the Office of Information and Regulatory Affairs (OIRA) will review all significant rules. The OIRA has determined that this rule is not significant.

Executive Order 13563 reaffirms the principles of E.O. 12866 while calling for improvements in the nation's regulatory system to promote predictability, to reduce uncertainty, and to use the best, most innovative, and least burdensome tools for achieving regulatory ends. The executive order directs agencies to consider regulatory approaches that reduce burdens and maintain flexibility and freedom of choice for the public where these approaches are relevant, feasible, and consistent with regulatory objectives. E.O. 13563 emphasizes further that regulations must be based on the best available science and that the rulemaking process must allow for public participation and an open exchange of ideas. The BLM has developed this rule in a manner consistent with these requirements.

Regulatory Flexibility Act

The BLM certifies that this final rule will not have a significant economic effect on a substantial number of small entities as defined under the Regulatory Flexibility Act (5 U.S.C. 601 et seq.). The Small Business Administration (SBA) has developed size standards to carry out the purposes of the Small Business Act and those size standards can be found at 13 CFR 121.201. The Small Business Act applies to oil and gas extraction firms with fewer than 1,250 employees, oil and gas drilling firms with fewer than 1,000 employees, and firms providing oil and gas support activities with annual receipts of no more than $38.5 million. These small entities must be considered as being at "arm's length" from the control of any parent companies.

Of the 6,460 domestic firms involved in crude oil and gas extraction in 2013, U.S. Census data show that 99 percent (or 6,370) had fewer than 500 employees, which means that nearly all U.S. firms involved in oil and gas extraction in 2013 fell within the SBA's size standard of fewer than 1,250 employees. Of the 2,097 firms participating in oil and gas drilling activities in 2013, U.S. Census data show that 2,044 (97 percent) had fewer than 500 employees, which means that nearly all U.S. firms involved in oil and gas support activities in 2013 fell within the SBA's size standard of fewer than 1,000 employees. In 2012, there were 8,877 firms involved in drilling and other support functions, of which 96 percent (8,561) had annual net receipts of no more than $35 million, with a greater number below the SBA's $38.5 million threshold.

In addition to lessees and operators, we must consider the size of the purchaser and transporter firms. There are multiple NAICS categories that could include firms involved in the purchasing and transporting of petroleum from Federal and Indian leases. For example, petroleum refiners could be identified as purchasers. For petroleum refiners

(NAICS code 324110), the SBA standard says a small business cannot have more than 1,500 employees or more than 200,000 bbl per calendar day total operable atmospheric crude oil distillation capacity. In that context, capacity includes owned or leased facilities as well as facilities under a processing agreement or an arrangement such as an exchange agreement or a throughput agreement. Purchasers could also be wholesalers, truck transporters, or natural gas or pipeline operators. For wholesalers, including petroleum wholesalers (NAICS codes 424710 and 424720), the SBA standard for a small entity is one that has fewer than 200 employees. For truck transporters (NAICS subsector 484), the SBA defines a small entity as a firm with less than $27.5 million in annual receipts. For natural gas pipeline operators (NAICS code 486210), the standard is a maximum of $27.5 million in receipts per year. For crude oil pipeline operators (NAICS code 486110), the standard is fewer than 1,500 employees.

As discussed above, national data, including number of firms, number of employees by firm, and annual receipts by firm, is not discretely identified for purchasers and transporters of petroleum or natural gas. The potentially affected purchasers and transporters will likely be a minor component in any number of the relevant NAICS categories. Of the few NAICS categories where reported employment, receipt, and production data matches up with the SBA size standards, the preponderance of the firms will be considered small entities as defined by the SBA.

Based on the available national data, the preponderance of firms involved in developing, producing, purchasing, and transporting oil and gas from Federal and Indian lands are small entities as defined by the SBA. As such, it appears a substantial number of small entities could be affected by this final rule.

Using the best available data, the BLM estimates there are approximately 3,700 lessees and operators conducting oil and gas operations on Federal and Indian lands that could be affected by this final rule. Additionally, the BLM estimates there are approximately 200 to 300 purchasers and transporters operating on Federal and Indian lands that potentially could be affected by this final rule.

In addition to determining whether a substantial number of small entities are likely to be affected by this rule, the BLM must also determine whether the rule is anticipated to have a significant economic impact on those small entities. Based on the Economic and Threshold Analysis prepared for this final rule, the BLM anticipates the cost of implementing the provisions could reduce the average annual net income of impacted small entities by less than 0.001 percent. Except for the electronic filing requirement, all of the provisions apply to entities regardless of size. However, entities with the greatest activity will likely experience the greatest increase in compliance costs. As a general matter, smaller business entities are more likely to operate a smaller number of sites and FMPs for which they will have to submit the information and documentation that this final rule requires. Copies of the analysis can be obtained from the contact person listed earlier (see **FOR FURTHER INFORMATION CONTACT)**.

Based on the available information, we conclude that the final rule will not have a significant impact on a substantial number of small entities. Therefore, a final Regulatory Flexibility Analysis is not required, and a Small Entity Compliance Guide is not required.

Small Business Regulatory Enforcement Fairness Act

This final rule is not a major rule under 5 U.S.C. (2), the Small Business Regulatory Enforcement Fairness Act. This rule will not have an annual effect on the economy of $100 million or more. As explained in the Economic and Threshold Analysis, the final rule will increase the estimated ongoing costs associated with the development of Federal and Indian oil and gas resources by an estimated $11.7 million annually for the regulated community. In addition, there will be an estimated one-time cost to the regulated community to implement the new provisions of $31.2 million. The one-time implementation costs will be spread over 3 years, or about $10.4 million per year. As discussed in the Economic and Threshold Analysis, the BLM anticipates the cost of implementing the provisions could reduce the average annual net income of impacted small entities by approximately 0.01 percent.

This rule replaces Order 3 to ensure that oil and gas produced from Federal and Indian leases is properly and securely handled so that these resources are accurately accounted for.

This rule:

- Will not cause a major increase in costs or prices for consumers, individual industries, Federal, State, tribal, or local government agencies, or geographic regions; and
- Will not have significant adverse effects on competition, employment, investment, productivity, innovation, or the ability of U.S.-based enterprises to compete with foreign-based enterprises.

Unfunded Mandates Reform Act

In accordance with the Unfunded Mandates Reform Act (2 U.S.C. 1501 et seq.), the BLM finds that:

- This proposed rule would not "significantly or uniquely" affect small governments. A Small Government Agency Plan is unnecessary.
- This proposed rule would not produce a Federal mandate of $100 million or greater in any single year.

The proposed rule is not a "significant regulatory action" under the Unfunded Mandates Reform Act. The changes proposed in this rule would not impose any requirements on any non-Federal Governmental entity.

Executive Order 12630, Governmental Actions and Interference With Constitutionally Protected Property Rights (Takings)

Under Executive Order 12630, the proposed rule would not have significant takings implications. A takings implication assessment is not required. This proposed rule would set minimum standards for ensuring that oil and gas produced from Federal and Indian (except the Osage Tribe) oil and gas leases are properly and securely handled, so as to prevent theft and loss and to enable accurate measurement and production accountability. All such actions are subject to lease terms which expressly require that subsequent lease activities be conducted in compliance with applicable Federal laws and regulations. The proposed rule conforms to the terms of those Federal leases and applicable statutes, and as such the proposed rule is not a governmental action capable of interfering with constitutionally protected property rights. Therefore, the proposed rule would not cause a taking of private property or require further discussion of takings implications under this Executive Order.

Executive Order 13132, Federalism

In accordance with Executive Order 13132, the BLM finds that the proposed rule would not have significant Federalism effects. A Federalism assessment is not required. This proposed rule would not change the role of or responsibilities among Federal, State, and local governmental entities. It does not relate to the structure and role of the States and would not have direct, substantive, or significant effects on States.

Executive Order 13175, Consultation and Coordination with Indian Tribal Governments

Under Executive order 13175, the President's memorandum of April 29, 1994, "Government-to-Government Relations with Native American Tribal Governments" (59 FR 22951), and 512 Departmental Manual 2, the BLM evaluated possible effects of the final rule on federally recognized Indian tribes. The BLM approves proposed operations on all Indian onshore oil and gas leases (except Osage Tribe). Therefore, the final rule has the potential to affect Indian tribes. In conformance with the Secretary's policy on tribal consultation, the BLM held tribal consultation meetings to which more than 175 tribal entities were invited, both before the rule was purposed and during the public comment period on the proposed rule. The consultations were held in:

Pre-publication meetings

- Tulsa, Oklahoma on July 11, 2011;
- Farmington, New Mexico on July 13, 2011; and
- Billings, Montana on August 24, 2011.
- Tribal workshop and webcast in Washington, D.C. on April 24, 2013.

Post-publication Meetings

- The BLM hosted a webinar to discuss the requirements of the proposed rule and solicit feedback from affected tribes on November 19, 2015; and
- In-person meetings were held in:
    - Durango Colorado, on December 1, 2015;
    - Oklahoma City, Oklahoma, on December 3, 2015; and
    - Dickinson, North Dakota, on December 8, 2015.

The BLM also met with interested tribes on a one-on-one basis as requested to address questions on the proposed rule prior to the publication of the final rule. In each instance, the purpose of these meetings was to solicit feedback and comments from the tribes. The primary concerns expressed by tribes related to the subordination of tribal laws, rules, and regulations by the proposed rule; tribal representation on the Department's Gas and Oil Measurement Team; and the BLM's Inspection and Enforcement program's ability to enforce the terms of this rule. In general, the tribes, as royalty recipients, expressed support for the goals of the rulemaking, namely accurate measurement. With respect to tribal representation on the Department's Gas and Oil Measurement Team, it should be noted that the team is internal only. That said, the BLM will continue to consult with tribes on measurement issues that impact them and their resources. None of the tribal comments received were directed specifically at this rule's oil measurement requirements, and therefore no changes were made as a result of these comments. While the BLM will continue to address these concerns, none of the concerns affect the substance of the proposed rule.

Executive Order 12988, Civil Justice Reform

Under Executive Order 12988, the Office of the Solicitor has determined that the final rule will not unduly burden the judicial system and meets the requirements of Sections 3(a) and 3(b)(2) of the Executive Order. The Office of the Solicitor has reviewed the final rule to eliminate drafting errors and ambiguity. It has been written to minimize litigation, provide clear legal standards for affected conduct rather than general standards, and promote simplification and burden reduction.

Executive Order 13352, Facilitation of Cooperative Conservation

Under Executive Order 13352, the BLM has determined that this final rule will not impede facilitating cooperative conservation and will take appropriate account of and consider the interests of persons with ownership or other legally recognized interests in land or other natural resources. This rulemaking process involved Federal, tribal, State, and local governments, private for-profit and nonprofit institutions, other nongovernmental entities and individuals in the decision-making via the public comment process. That process provides that the programs, projects, and activities are consistent with protecting public health and safety.

Paperwork Reduction Act

The Paperwork Reduction Act (PRA) (44 U.S.C. 3501-3521) provides that an agency may not conduct or sponsor, and a person is not required to respond to, a collection of information, unless it displays a currently valid OMB control number. Collections of information include requests and requirements that an individual, partnership, or corporation obtain information, and report it to a Federal agency. See 44 U.S.C. 3502(3); 5 CFR 1320.3(c) and (k).

This rule contains information collection activities that require approval by the OMB under the PRA. The BLM included an information collection request in the proposed rule. OMB has approved the information collection for the final rule under control number 1004-0207.

Some of the information collection activities in the rule will add new uses and burdens for BLM Form 3160-5, Sundry Notices and Reports on Wells. Form 3160-5 has been approved by OMB for uses enumerated at 43 CFR 3162.3-2, and is one of 17 information collection activities that are included in control number 1004-0137, Onshore Oil and Gas Operations (43 CFR part 3160) (expiration date January 31, 2018).

The information collection activities in this rule are described below along with estimates of the annual burdens. Included in the burden estimates are the time for reviewing instructions, searching existing data sources, gathering and maintaining the data needed, and completing and reviewing each component of the information collection.

Summary of Information Collection Activities

Title: Oil and Gas Facility Site Security (43 CFR Subparts 3170 and 3173).

Forms: Form 3160-5, Sundry Notices and Reports on Wells.

OMB Control Number: 1004-0207.

Description of Respondents: Oil and gas operators, lessees, operators, purchasers, transporters, and any other person directly involved in producing, transporting, purchasing, selling, or measuring oil or gas.

Abstract: This rule establishes minimum security standards for Federal and Indian (except Osage Tribe) oil and gas leases.

Frequency of Collection: On occasion.

Obligation to Respond: Required to obtain or retain benefits.

Estimated Annual Responses: 275,161.

Estimated Reporting and Recordkeeping "Hour" Burden: 589,225 hours.

Discussion of Information Collection Activities

Some of the activities will be one-time-only, while others will be ongoing. Similarly, the BLM recognizes that for some of the activities, there will be both an annual burden for some respondents, and a one-time burden for virtually all respondents in the initial implementation. Because of the way the rule is structured, the one-time burdens that are applicable to all respondents are phased-in over 3 years based on production volumes.

The preamble to the proposed rule solicited public comments on the information collection. Those comments, and responses of the BLM, are discussed below. All comments – both those pertaining to information collection and other comments — are addressed in the final rule. The comments and BLM responses pertaining specifically to the collection of information are discussed in the Section-by-Section analysis of the following sections of the final rule:

- 3170.7;
- 3173.6 through 3173.9;
- 3173.11 through 3173.13;
- 3173.15;
- 3173.23; and
- 3173.25.

Variance Requests (43 CFR 3170.6)

Section 3170.6, a new regulation, authorizes any party that is subject to the regulations in 43 CFR part 3170 to request a variance from any of the regulations in part 3170. While § 3170.6 states that a request for a variance should be filed using the BLM's electronic system, it also allows the use of paper copies of Form 3160-5 (Sundry Notices). Thus, § 3170.6 represents a new use of Form 3160-5, Sundry Notices and Reports on Wells.

Required Recordkeeping and Records Submission (43 CFR 3170.7)

Section 3170.7 applies to lessees, operators, purchasers, transporters, and any other person directly involved in producing, transporting, purchasing, selling, or measuring oil or gas through the point of royalty measurement or the point of first sale, whichever is later. This regulation applies to records generated during or for the period for which the lessee or operator has an interest in or conducted operations on the lease, or in which a person is involved in transporting, purchasing, or selling production from the lease. This information collection activity assists the BLM in accurate accounting of oil and gas production.

In general, records from Federal leases must be maintained for 7 years, and records from Indian leases must be maintained for 6 years. Additional details and exceptions are explained below.

For Federal leases, and units or communitized areas that include Federal leases but do not include Indian leases, the record holder must maintain records for 7 years after the records are generated. If a judicial proceeding or demand involving such records is timely commenced, the record holder must maintain such records until the final nonappealable decision in such judicial proceeding is made, or with respect to that

demand is rendered, unless the Secretary, her designee, or the applicable delegated State authorizes in writing an earlier release of the requirement to maintain such records.

For Indian leases, and units or communitized areas that include Indian leases but do not include Federal leases, the record holder must maintain records for 6 years after the records are generated. If the Secretary or her designee notifies the record holder that the Department of the Interior has initiated or is participating in an audit or investigation involving such records, the record holder must maintain such records until the Secretary or his designee releases the record holder from the obligation to maintain the records.

For units and communitized areas that include both Federal and Indian leases, if the Secretary or his designee has notified the record holder within 6 years after the records are generated that an audit or investigation involving such records has been initiated, but a judicial proceeding or demand is not commenced within 7 years after the records are generated, the record holder must retain all records regarding production from the unit or communitized area until the Secretary or her designee releases the record holder from the obligation to maintain the records. If a judicial proceeding or demand is commenced within 7 years after the records are generated, the record holder must retain all records regarding production from the unit or communitized area until the final nonappealable decision in such judicial proceeding is made, or with respect to that demand is rendered, unless the Secretary or her designee authorizes in writing a release of the requirement to maintain such records before a final nonappealable decision is made or rendered.

For all types of Federal and Indian leases, the lessee, operator, purchaser, and transporter must maintain an audit trail that includes all records, including source records that are used to determine quality, quantity, disposition, and verification of production

attributable to a Federal or Indian lease, unit participating area (unit PA), or CA, must include the FMP number or the lease, unit PA, or CA number along with a unique equipment identifier (e.g., a unique tank identification number and meter station number); and the name of the company that created the record. For existing measurement facilities, in the interim period before the assignment of an FMP number, all records must include the following information:

- The name of the operator;
- The lease, unit PA, or CA number; and
- The well or facility name and number.

Section 3170.7(h) requires operators, purchasers, and transporters to submit all records, including source records that are relevant to determining the quality, quantity, disposition, and verification of production attributable to Federal or Indian leases, upon request, in accordance with a regulation, written order, Onshore Order, NTL, or COA.

Water-Draining Operations —Data Collection (43 CFR 3173.6); and

Water-Draining Operations —Recordkeeping and Records Submission (43 CFR 3170.7 and 3173.6)

Section 3173.6 requires submission of information when water is drained from a production storage tank. The information is required from the operator, purchaser, or transporter, as appropriate. Previously, the operator was not required to record the volume of hydrocarbons that are in the tank before and after water is drained. As a result, hydrocarbons could be drained with the water and removed without proper measurement and accounting, and without royalties being paid. This information collection activity

assists the BLM in accurate accounting of oil and gas produced from Federal and Indian leases.

The following information is required:

- Federal or Indian lease, unit PA, or CA number(s);
- The tank location by land description;
- The unique tank number and nominal capacity;
- Date for opening gauge;
- Opening gauge of the total oil volume and free-water measurements;
- Unique identifying number of each seal removed;
- Closing gauge of the total oil volume measurement; and
- Unique identifying number of each seal installed.

Hot Oiling, Clean-up, and Completion Operations —Data Collection (43 CFR 3173.7); and

Hot Oiling, Clean-up, and Completion Operations —Recordkeeping and Records Submission (43 CFR 3170.7 and 3173.7)

Section 3173.7 requires the submission of information during hot oil, clean-up, or completion operations, or any other situation where the operator removes oil from storage, temporarily uses it for operational purposes, and then returns it to storage on the same lease, unit PA, or CA.

Previously, the operator was not required to record the volume of hydrocarbons removed from storage with the expectation that they will be returned to storage. As a result, the volume of produced hydrocarbons could be counted twice; first when it was initially produced then later after it is returned to storage. This information collection

activity assists the BLM in accurate accounting of oil and gas produced from Federal and Indian leases.

The following information is required:

- Federal or Indian lease, unit PA, or CA number(s);
- The tank location by land description;
- The unique tank number and nominal capacity;
- Date of the opening gauge;
- Opening gauge measurement;
- Closing gauge measurement;
- Unique identifying number of each seal installed;
- How the oil was used; and
- Where the oil was used (i.e., well or facility name and number).

Report of Theft or Mishandling of Production (43 CFR 3173.8)

Section 3173.8 requires operators, transporters, or purchasers to submit a report (either oral or written) no later than the next business day after discovery of an incident of apparent theft or mishandling of production. All oral reports must be followed up with a written incident report within 10 business days of the oral report. By applying not only to operators but also to transporters and purchasers (who often are the first ones to discover theft and mishandling or to recognize suspicious activity), this information collection activity assists in prompt disclosure of theft or mishandling. The incident report must include the following information:

- Company name and name of the person reporting the incident;

- Lease, unit PA, or CA number, well or facility name and number, and FMP number, as appropriate;
- Land description of the facility location where the incident occurred;
- The estimated volume of production removed;
- The manner in which access was obtained to the production or how the mishandling occurred;
- The name of the person who discovered the incident;
- The date and time of the discovery of the incident; and
- Whether the incident was reported to local law enforcement agencies and company security

Required Recordkeeping for Inventory and Seal Records (43 CFR 3173.9)

Section 3173.9 requires operators to measure and record within +/- 3 days of the final day of each calendar month an inventory consisting of TOV in storage (less free water). If the inventory is not taken on the final day of each month, it must be estimated based on two measurements no less than 20 days and no more than 31 days apart, based upon the prorated difference between these inventory levels and any sales that have occurred between the two measurements. This information collection activity assists the BLM in accurate accounting of oil and gas production.

For each seal, the operator must maintain a record that includes the unique identifying number of each seal and the valve or meter component on which the seal is or was used; the date of installation or removal of each seal; for valves, the position (open or closed) in which it was sealed; and the reason the seal was removed.

Site Facility Diagrams for Existing Facilities (43 CFR 3173.11(d)(2)); and

Site Facility Diagrams for Future Facilities (43 CFR 3173.11(d)(1))

Section 3173.11 requires a site facility diagram for all facilities. Section 3170.3 of the final rule defines "facility" as a site and associated equipment used to:

- Process, treat, store, or measure oil or gas production from or allocated to a Federal or Indian lease, unit, or CA that is located upstream of or at (and including) the approved point of royalty measurement; or
- Store, measure, or dispose of produced water that is located on a lease, unit, or CA.

A site facility diagram is one of the BLM's primary mechanisms for monitoring operators' compliance with measurement regulations and policy. These information collection activities enable the BLM to verify, among other things, royalty-free-use volumes reported by the operator on its OGORs. These activities also enhance production accountability and respond to key recommendations made by the GAO and the OIG. In the long term, this information collection request will eliminate the need for the BLM to obtain the information in connection with a production verification and accountability review.

Paragraphs (a) through (c) of § 3173.11 require that each site facility diagram be submitted with a completed Sundry Notice[13]. The diagram itself should be formatted to fit on an 8½ x 11 sheet of paper, if possible, and must be legible and comprehensible to an individual with an ordinary working knowledge of oilfield operations. If more than one page is required, each page must be numbered (in the format "N of X pages"). Paragraph (c) specifies that a site facility diagram must:

[13] Form 3160-3, which is approved under OMB control number 1004-0137 for uses enumerated at 43 CFR 3162.3-2.

- Reflect the position of the production and water recovery equipment, piping for oil, gas, and water, and metering or other measuring systems in relation to each other, but need not be to scale;
- Commencing with the header, identify all of the equipment, including, but not limited to, the header, wellhead, piping, tanks, and metering systems located on the site, and include the appropriate valves and any other equipment used in the handling, conditioning, or disposal of production and water, and indicate the direction of flow;
- Identify by API number the wells flowing into headers;
- Indicate which valve(s) must be sealed and in what position during the production and sales phases and during the conduct of other production activities (e.g., circulating tanks or drawing off water), which may be shown by an attachment, if necessary;
- Clearly identify the lease, unit PA, or CA to which the diagram applies and the land description of the facility, and the name of the company submitting the diagram, with co-located facilities being identified for each lease, unit PA, or CA; and
- Clearly identify as an attachment all meters and measurement equipment. Specifically identify all approved and assigned FMPs.

If another operator operates a co-located facility, the site facility diagram must depict the co-located facilities on the diagram or list them on an attachment and identify them by company name, facility name(s), lease, unit PA, or CA number, and FMP number(s). When describing co-located facilities operated by one operator, the site facility diagram

must include a skeleton diagram of the co-located facility, showing equipment only. For storage facilities common to co-located facilities operated by one operator, one diagram would be sufficient.

If the operator claims royalty-free use, the site facility diagram must clearly identify on the diagram or as an attachment, the equipment for which the operator claims royalty-free use.

Section 3173.11(d) specifies the timing requirements for submission of an updated site facility diagram for facilities for which the BLM will assign an FMP number under § 3173.12. This section applies to both new and existing facilities.

- For facilities that are in service on or after the effective date of the final rule, a site facility diagram must be submitted within 30 days after the BLM assigns an FMP number to the facility.
- For facilities that are in service before the effective date of the final rule and that have a site facility diagram on file that meets the minimum requirements of the previous rule (i.e., Order 3), operators must submit a new site facility diagram within 30 days after:
    - Existing facilities are modified;
    - A non-Federal facility located on a Federal lease or federally approved unit or communitized area is constructed or modified; or
    - There is a change in operator.

The submitted diagram must comply with the requirements of paragraphs (a) through (c) of § 3173.11. Those requirements are described above.

Section 3173.11(e) specifies the timing requirements for submission of an updated site facility diagram for facilities for which the BLM will not assign an FMP number under § 3173.12. This section applies to both new and existing facilities.

- For facilities that are in service on or after the effective date of the final rule, a site facility diagram must be submitted within 30 days after the BLM assigns an FMP number to the facility.
- For facilities that are in service before the effective date of the final rule and that have a site facility diagram on file that meets the minimum requirements of the previous rule (i.e., Order 3), operators must submit a new site facility diagram within 30 days after:
    - Existing facilities are modified;
    - A non-Federal facility located on a Federal lease or federally approved unit or communitized area is constructed or modified; or
    - There is a change in operator.

Section 3173.11(f) specifies that after a site facility diagram has been submitted that complies with the requirements of § 3173.11, operators have an ongoing obligation to update and amend them within 30 days after such facilities are modified, a non-Federal facility located on a Federal lease or federally approved unit or communitized area is constructed or modified, or there is a change in operator.

Request for Approval of an FMP for Existing Measurement Facilities (43 CFR 3173.12(e)); and

Request for Approval of an FMP for Future Measurement Facilities (43 CFR 3173.12(d))

Section 3173.12 requires operators to obtain BLM approval of FMPs for all measurement points that are used to determine royalties. An FMP is a BLM-approved point where oil or gas produced from a Federal or Indian lease, unit, or CA is measured and the measurement affects the calculation of the volume or quality of production on which royalty is owed. See 43 CFR 3170.3.

This information collection activity provides the BLM with a formal nationwide process for designating and approving the point at which oil or gas must be measured for the purpose of determining royalty. This activity assists the BLM in verifying production. Upon receiving an initial request for an FMP, the BLM will approve it if it meets the requirements of this rule, and assign each FMP a unique identifying number, which the operator, transporter, or purchaser will use when reporting production results to the Office of Natural Resources Revenue (ONRR).

All requests for an FMP must include the following:

- A complete Sundry Notice;
- The applicable Measurement Type Code specified in the BLM's Well Information System (WIS);
- For gas measurement, identification of the operator/purchaser/transporter unique station number, meter tube size or serial number, and type of secondary device;
- For oil measurement, identification of the oil tank number(s) or tank serial number(s) and size of each tank, and whether the oil was measured by LACT or CMS if not measured by tank gauge;
- Where production from more than one well will flow to the requested FMP, a list of the API well numbers associated with the FMP; and

- FMP location by land description.

Section 3173.12(d) requires operators to request a new FMP for new permanent measurement facilities before any production leaves the facility. Each request must meet the requirements listed above.

Modifications to an FMP (43 CFR 3173.13(b)(1))

Section 3173.13(b)(1) requires operators with an approved FMP to submit a Sundry Notice that details any modifications to the FMP within 30 days after the change. These details include, but are not limited to, tank numbers or serial numbers and sizes for oil FMPs, unique station numbers, meter tube sizes or serial numbers, and type of secondary devices for gas FMPs, and for all FMPs with more than one well, the API numbers for all wells associated with the facility. The Sundry Notice must specify what was changed, the effective date, and include, if appropriate, an amended site facility diagram. This information collection activity assists the BLM in accurate accounting of oil and gas production.

Request for Approval of an Existing CAA (43 CFR 3173.15); and

Request for Approval of a Future CAA (43 CFR 3173.15)

A CAA is a formal allocation agreement to combine production from two or more sources (leases, unit PAs, CAs, or non-Federal or non-Indian properties) before the FMP. See 43 CFR 3173.1. This information collection activity helps the BLM obtain the production data that is necessary to verify production from Federal or Indian leases covered by CAAs.

Section 3173.15 requires the following information:

- A completed Sundry Notice seeking approval of commingling and allocation, and of off-lease measurement, if any of the proposed FMPs are outside the boundaries of any of the leases, units, or CAs whose production would be commingled;
- A proposed allocation agreement and a proposed allocation methodology with an example of how the methodology is applied (including allocation of produced water) signed by each operator of each of the leases, unit PAs, or CAs whose production would be included in the CAA;
- A list of all Federal or Indian lease, unit PA, or CA numbers in the proposed CAA, specifying the type of production (i.e., oil, gas, or both) for which commingling is requested;
- A topographic map or maps showing the boundaries of all the leases, units, unit PAs, or communitized areas whose production is proposed to be commingled; the location of all existing or planned facilities and relative location of all wellheads and piping included in the CAA, and FMPs existing or proposed to be installed to the extent known or anticipated;
- Documentation demonstrating that each of the leases, unit PAs, or CAs proposed for inclusion in the CAA is producing in paying quantities (or, in the case of Federal leases, is capable of production in paying quantities) pending approval of the CAA; and
- All gas analyses, including Btu content (if the CAA request includes gas) and all oil gravities (if the CAA request includes oil) for previous periods of production from the leases, units, unit PAs, or CAs proposed for inclusion in the CAA, up to 6 years before the date of the application for approval of the CAA. However, gas

analysis and oil gravity data is not needed if the CAA meets the requirements and standards of § 3173.14(a) of the final rule.

If new surface disturbance is proposed on one or more of the leases, units, or CAs, and the surface is managed by the BLM, the application must include a proposed surface use plan of operations for the proposed surface disturbance.

If new surface disturbance is proposed on BLM-managed land outside any of the leases, units, or CAs whose production would be commingled, the application must include a right-of-way grant application, under 43 CFR part 2880 if the FMP is on a pipeline, or under 43 CFR part 2800, if the FMP is a meter or storage tank. Applications for right-of-way (i.e., on SF-299) are authorized under OMB control number 0596-0082.

If new surface disturbance is proposed on Federal land managed by an agency other than the BLM, the application must include written approval from the appropriate surface-management agency.

If a new surface disturbance is proposed on Indian land outside the lease, unit, or communitized area from which the production would be commingled, a right-of-way grant application must be filed under 25 CFR part 169, with the appropriate BIA office.

Request for Modification of a CAA (43 CFR 3173.18)

Section 3173.18 provides that a CAA must be modified when there is modification to the allocation agreement, additional leases, unit PAs, or CAs are proposed for inclusion in the CAA, or any of the leases, unit PAs, or CAs within the CAA terminate or permanently cease production. The following information would be required in a request to modify a CAA:

- A completed Sundry Notice describing the modification requested;

- A new allocation methodology, if appropriate, and an example of how the methodology is applied; and
- Certification by each operator that it agrees to the CAA modification.

This information collection activity helps the BLM obtain the production data that is necessary to verify production from Federal or Indian leases covered by CAAs.

Response to Notice of Insufficient CAA (43 CFR 3173.16)

Upon receipt of an operator's request for assignment of an FMP number to a facility associated with a CAA existing on the effective date of the final rule, (1) The BLM may determine that the CAA meets the requirements (at 43 CFR 3173.16) for grandfathering the CAA; or (2) If grandfathering is not appropriate, the BLM will review the CAA for consistency with the minimum standards and requirements for a CAA under 43 CFR 3173.14. The BLM will notify the operator in writing of any inconsistencies or deficiencies. The operator must then correct any inconsistencies or deficiencies that the AO identifies, provide additional information, or request an extension of time, within 20 business days after receipt of the BLM's notice. When the BLM is satisfied that the operator has corrected any inconsistencies or deficiencies, the BLM will terminate the existing CAA and grant a new CAA based on the operator's corrections. If the existing CAA does not meet the applicable standards and the operator does not correct the deficiencies, the BLM may terminate the existing CAA and deny the request for an FMP number for the facility associated with the existing CAA.

Request to Modify a CAA (43 CFR 3173.18)

A CAA must be modified when there is a modification to the allocation agreement; additional leases, unit PAs, or CAs are proposed for inclusion in the CAA; or any of the leases, unit PAs, or CAs within the CAA terminate or permanently cease production.

To request a modification of a CAA, all operators must submit to the BLM:

- A completed Sundry Notice describing the modification requested;
- A new allocation methodology, including an allocation methodology which includes allocation of produced water and an example of how the methodology is applied, if appropriate; and
- Certification by each operator in the CAA that it agrees to the CAA modification.

A change in operator does not trigger the need to modify a CAA.

Request to Terminate a CAA (43 CFR 3173.20)

Section 3173.20 authorizes the BLM to terminate an approved CAA and allows for the CAA to be terminated by the operator at their request. The operator must submit a Sundry Notice to the BLM requesting the termination in which the notice must identify the FMP(s) for the lease(s), unit(s), or CA(s) previously subject to the CAA.

Request for Approval of Off-Lease Measurement —General (43 CFR 3173.23); Request for Approval of Off-Lease Measurement —Amendment of an Existing Approval (43 CFR 3173.23); and

Response to Notice of Insufficient Off-Lease Measurement Approval (43 CFR 3173.25)

These information collection activities assist the BLM in reducing discrepancies between operator-allocated volumes, which operators report to ONRR, and the volumes that the BLM calculates during follow-up audits. In accordance with this final rule, the

BLM will allow off-lease measurement of production only from a single Federal or Indian lease, unit PA, CA, or CAA, and only at an approved FMP.

Section 3173.23(a) through (j) requires the following information in an application for approval of off-lease measurement:

- A completed Sundry Notice;
- Justification for off-lease measurement;
- A topographic map of appropriate scale showing the boundary of the lease(s), unit(s), or CA(s) from which the production originates, the location of existing or planned facilities, the relative location of all wellheads (including the API number for each well) and piping included in the off-lease measurement proposal, and existing FMPs or FMPs proposed to be installed to the extent known or anticipated;
- The surface ownership of all land on which equipment is, or is proposed to be, located; and
- A statement that indicates whether the proposal includes all, or only a portion of, the production from the lease, unit, or CA and if the proposal includes only a portion of the production, the application would be required to identify the FMP(s) where the remainder of the production from the lease, unit, or CA is measured or is proposed to be measured.

If any of the proposed off-lease measurement facilities are located on non-federally owned surface, the application must include a written concurrence signed by the owner(s) of the surface and the owner(s) of the measurement facilities, including each owner(s)' name, address, and telephone number, granting the BLM unrestricted access to the off-

lease measurement facility and the surface on which it is located, for the purpose of inspecting any production, measurement, water handling, or transportation equipment located on the non-Federal surface up to and including the FMP, and for otherwise verifying production accountability. If the ownership of the non-Federal surface or of the measurement facility changes, the operator must obtain and provide to the AO the written concurrence required under this paragraph from the new owner(s) within 30 days of the change in ownership.

If a proposed off-lease FMP with facilities on BLM land would involve new surface disturbance and consists of a meter or storage tank, or is on a pipeline, a right-of-way grant application must be submitted. Applications for rights-of-way (SF-299) are authorized under control number 0596-0082, which is administered by the U.S. Forest Service on behalf of several Federal agencies. If new surface disturbance if proposed for an FMP that includes facilities on Federal land managed by an agency other than the BLM, written approval is required from that agency. A right-of-way grant application must also be submitted with the appropriate BIA office if any of the proposed facilities are on Indian lands outside of the producing area.

If the operator proposes to use production from the lease, unit or CA as fuel at the off-lease measurement facility without payment of royalty, the application must include an application for approval of off-lease royalty-free use under applicable rules. The BLM is developing the applicable rules and will seek OMB clearance for the information collection activities in those rules.

Section 3173.23(k) provides that to apply for an amendment of an existing approval of off-lease measurement, the operator must submit a completed Sundry Notice required

under paragraph (a), and information listed at paragraphs (b) through (j) of § 3173.23 to the extent the previously submitted information has changed. This information collection activity assists the BLM in reducing discrepancies between operator-allocated volumes, which operators report to ONRR, and the volumes that the BLM calculates during follow-up audits.

Upon receipt of an operator's request for assignment of an FMP number for a facility associated with an off-lease measurement approval existing on the effective date of the final rule, the BLM will review the existing approval for consistency with the requirements at 43 CFR 3173.22. The BLM will notify the operator of any inconsistencies or deficiencies. The operator must correct any of the identified flaws, provide additional information, or request an extension of time from the AO, within 20 business days after receiving the notice. This information collection activity assists the BLM in reducing discrepancies between operator-allocated volumes, which operators report to ONRR, and the volumes that the BLM calculates during follow-up audits.

Request to terminate an off-lease measurement approval (43 CFR 3173.27)

Section 3173.27 authorizes the BLM to terminate an off-lease measurement approval and allows for the off-lease measurement approval to also be terminated by the operator at their request. The operator must submit a Sundry Notice to the BLM requesting the termination in which the notice must identify the new FMP(s) for the lease(s), unit(s), or CA(s) previously subject to the off-lease measurement approval.

The following table itemizes the estimated hour and cost burdens for the information collection activities.

Estimated Hour Burdens

A. Type of Response	B. Number of Responses	C. Hours per Response	D. Total Hours (Column B x Column C)
Variance Requests (43 CFR 3170.6) Annual	100	8	800
Required Recordkeeping and Records Submission (43 CFR 3170.7) Annual	4,300	5	21,500
Water-Draining Operations — Data Collection (43 CFR 3173.6) Annual	5,000	2	10,000
Water-Draining Operations — Recordkeeping and Records Submission (43 CFR 3173.6) Annual	60,000	0.25	15,000
Hot Oiling, Clean-Up, and Completion Operations — Data Collection (43 CFR 3173.7) Annual	5,000	2	10,000
Hot Oiling, Clean-Up, and Completion Operations — Recordkeeping and Records Submission (43 CFR 3173.6) Annual	15,000	0.25	3,750
Report of Theft or Mishandling of Production (43 CFR 3173.8) Annual	5	10	50
Required Recordkeeping for Inventory and Seal Records (43 CFR 3173.9) Annual	5,000	2	10,000
Site Facility Diagrams for Existing Facilities) (43 CFR 3173.11(d)(2)) One-time	4,156	6	24,935

A. Type of Response	B. Number of Responses	C. Hours per Response	D. Total Hours (Column B x Column C)
Site Facility Diagrams for Future Facilities (43 CFR 3173.11(d)(1)) Annual	5,000	6	30,000
Request for Approval of an FMP for Existing Measurement Facilities (43 CFR 3173.12(e)) One-time	166,232	2	332,464
Request for Approval of an FMP for Future Measurement Facilities (43 CFR 3173.12(d)) Annual	1,000	2	2,000
Modifications to an FMP (43 CFR 3173.13(b)(1)) Annual	1,000	2	2,000
Request for Approval of an Existing CAA (43 CFR 3173.15) One-time	1,662	40	66,493
Request for Approval of a Future CAA (43 CFR 3173.15) Annual	500	40	20,000
Response to Notice of Insufficient CAA (43 CFR 3173.16) Annual	150	40	6,000
Request to Modify a CAA (43 CFR 3173.18) Annual	500	40	20,000
Request for Approval of Off-Lease Measurement — General (43 CFR 3173.23) Annual	100	10	1,000

A. Type of Response	B. Number of Responses	C. Hours per Response	D. Total Hours (Column B x Column C)
Request for Approval of Off-Lease Measurement — Amendment of an Existing Approval (43 CFR 3173.23) One-time	166	10	1,662
Response to Notice of Insufficient Off-Lease Measurement Approval (43 CFR 3173.25) Annual	15	40	600
Total, Annual **Total, One-time**	**102,670** **172,491**		**152,700** **436,525**

National Environmental Policy Act

The BLM prepared an environmental assessment (EA), a Finding of No Significant Impact (FONSI), and Decision Record (DR) that concludes that the final rule will not constitute a major Federal action significantly affecting the quality of the human environment under Section 102(2)(C) of the National Environmental Policy Act (NEPA), 42 U.S.C. 4332(2)(C). Therefore, a detailed statement under NEPA is not required. A copy of the EA, FONSI, and DR are available for review and on file in the BLM Administrative Record at the address specified in the **ADDRESSES** section.

As explained in the EA, FONSI, and DR, the final rule will not have a significant effect on the human environment because, for the most part, its requirements involve changes that are of an administrative, technical, or procedural nature that apply to the BLM's and the lessee's or operator's management processes. For example, operators are now required to maintain records generated for Federal leases for at least 7 years, consistent with statutory requirements. Similarly, the final rule requires more detailed

information on site facility diagrams such as information about the equipment for which an operator claims royalty-free use. The submission of this additional information will not result in any on-the-ground impacts. In contrast with these provisions, compliance with some of the rule's other requirements may result in additional surface-disturbing activities (e.g., additional surface disturbance might be required if an operator with an existing off lease measurement authorization has to move those measurement facilities back on lease because they did not comply with the requirements of this final rule.) Such surface-disturbing activities will be subject to their own project-specific NEPA analyses, as appropriate, and will be conducted in accordance with existing surface operating standards and guidelines for oil and gas exploration and development, including appropriate Best Management Practices (BMP).

A draft of the EA was shared with the public during the public comment period on the proposed rule. During that process the BLM received a handful of comments on the EA. Some commenters questioned the BLM's level of NEPA analysis, specifically whether the BLM had met the "hard look" test of describing the environmental consequences of the proposed action, and the BLM's ability to reach a FONSI based on the level of analysis prepared. One commenter requested a complete NEPA revision with formal scoping on the EA and a meaningful socioeconomic analysis. Many commenters questioned the use of three separate EAs to disclose impacts of three separate orders. Those commenters asserted that CEQ regulations require connected actions to be evaluated in a single document and suggested a single EIS to address all three rules.

CEQ's NEPA regulations at 40 CFR 1508.18 identify new or revised agency rules and regulations as an example of a Federal action. Drafting new agency regulations of a

technical or administrative nature is a Federal action that is categorically excluded from NEPA review pursuant to 43 CFR 46.210(i). Instead of relying on the categorical exclusion, the BLM chose to complete a more robust level of NEPA documentation in the form of an EA for each of the proposed rules to replace Orders 3, 4, and 5. By preparing an EA for each of the proposed regulations, the BLM was able to disclose the potential environmental effects of the Federal agency decision on each of the regulations. This analysis addressed the impact of each rule individually, as well as the impact of all three rules cumulatively. With respect to socio-economic impacts, the BLM completed an Economic and Threshold Analyses for each of the rules. These analyses were not referenced in the Draft EAs for the rules, but have been addressed in the EAs for the final rules.

Other commenters stated that the BLM understated the potential surface impacts associated with the new rules and did not: (i) Adequately address potential surface impacts to private land; (ii) Address a reasonable range of alternatives; and (iii) Adequately describe the affected environment. As explained in the EA, the BLM anticipates that in the majority of cases, operators will use existing surface disturbances such as existing well pad locations in connection with activities undertaken in compliance with the final rule, which will minimize new surface construction and surface impacts.

Similarly, the codification of BLM regulations does not hinder or prevent development of private minerals. The likelihood of impacts to private surface is low. It is unclear whether private lands would be affected at all by the denial of off-lease measurement agreements and the resultant re-location of measurement facilities on to a lease, CA or unit PA. In the rare instances when new pipelines or other facilities were found to be

necessary on private surface, BLM authorization for activities on split estate would include site-specific NEPA documentation, with appropriate project-level mitigation and BMPs. In short, the impact of these provisions on private lands in terms of surface disturbance is likely to be minimal, and any attempt to estimate these impacts would be speculative.

The BLM's obligation under NEPA is to analyze alternatives that would meet the purpose and need for the proposed action and allow for a reasoned choice to be made. As described in the EA, a number of alternatives were considered, but eliminated from detailed study because they did not meet the purpose and need. Similarly, the discussion of the affected environment should only contain data and analysis commensurate in detail with the importance of the impacts, which the BLM anticipates to be minimal. The EA, FONSI, and DR were updated to address these comments, but did not change the BLM's overall analysis of the potential environmental impacts of the rule.

Executive Order 13211, Actions Concerning Regulations That Significantly Affect Energy Supply, Distribution, or Use

This final rule will not have a substantial direct effect on the nation's energy supply, distribution or use, including a shortfall in supply or price increase. The final rule strengthens the BLM's production accountability requirements for operators of Federal and Indian oil and gas leases. These changes increase recordkeeping requirements, place additional restrictions on CAAs and on off-lease measurement, and provide for significant new immediate assessments for violations of the regulations. All of these changes in the final rule are administrative in nature and will have a one-time average transition cost of about $8,400 per regulated entity and an ongoing annual average cost of

about $3,200 per entity per year. Entities with the greatest activity (e.g., numerous FMPs) will incur higher costs, but they will still be relatively minor. As a result, the BLM does not expect that the final rule will result in a net change in the quantity of oil and gas that is produced from oil and gas leases on Federal and Indian lands.

Information Quality Act

In developing this rule, the BLM did not conduct or use a study, experiment, or survey requiring peer review under the Information Quality Act (Pub. L. No. 106-554, Appendix C Title IV, 515, 114 Stat. 2763A–153).

Authors

The principal authors of this final rule are Michael Wade, Senior Oil and Gas Compliance Specialist, BLM Washington Office; Adrienne Brumley, Petroleum Engineer, BLM New Mexico State Office; Conan Donnelly, Petroleum Engineering Technician, BLM Miles City Field office; Kahindo Kamau, Petroleum Engineer, BLM Great Falls Field Office; Steve McCracken, Petroleum Engineering Technician, BLM Great Falls Field Office; Chris Carey, ONRR Denver Office; Luke Lundmark, ONRR Denver Office; and Vicky Stafford, ONRR Denver Office. The team was assisted by Rich Estabrook, BLM Washington Office; Faith Bremner, Jean Sonneman and Ian Senio, Office of Regulatory Affairs, BLM Washington Office; Michael Ford, Economist, BLM Washington Office; Barbara Sterling, Natural Resource Specialist, BLM Colorado State Office; Bryce Barlan, Senior Policy Analyst, BLM Washington Office; and Dylan Fuge,

Counselor to the Director, BLM Washington Office; Christopher Rhymes, Attorney Advisor, Office of the Solicitor, Department of the Interior; and Leslie Peterson and Geoffrey Heath (both now retired).

List of Subjects in 43 CFR part 3160

Administrative practice and procedure, Government contracts, Indians-lands, Mineral royalties, Oil and gas exploration, Penalties, Public lands—mineral resources, Reporting and recordkeeping requirements.

List of Subjects in 43 CFR part 3170

Administrative practice and procedure, Immediate assessments, Incorporation by reference, Indians-lands, Mineral royalties, Oil and gas measurement, Public lands—mineral resources.

Dated: ____10-6-16_____

_____

Janice M. Schneider
Assistant Secretary
Land and Minerals Management

43 CFR Chapter II

For the reasons set out in the preamble, the Bureau of Land Management proposes to amend 43 CFR chapter II as follows:

PART 3160 – ONSHORE OIL AND GAS OPERATIONS

1. Revise the authority citation for part 3160 to read as follows:

Authority: 25 U.S.C. 396, 396d and 2107; 30 U.S.C. 189, 306, 359, and 1751; and 43 U.S.C. 1732(b), 1733, and 1740.

2. Amend § 3160.0-3 by removing the words "the Federal Oil and Gas Royalty Management Act of 1982 (30 U.S.C.1701)" and adding in their place the words "the Federal Oil and Gas Royalty Management Act of 1982, as amended by the Federal Oil and Gas Royalty Simplification Act of 1996 (30 U.S.C. 1701 et seq.)".

3. Revise § 3161.1 to read as follows:

§ 3161.1 Jurisdiction.

(a) The regulations in this part apply to all operations conducted on:

(1) All Federal and Indian (except those of the Osage Tribe) onshore oil and gas leases;

(2) All onshore facility measurement points where Federal or Indian (except those of the Osage Tribe) oil or gas is measured;

(3) Indian Mineral Development Act agreements for oil and gas, unless specifically excluded in the agreement; and

(4) Leases and other business agreements for the development of tribal energy resources under a Tribal Energy Resource Agreement entered into with the Secretary, unless specifically excluded in the lease, other business agreement, or Tribal Energy Resource Agreement.

(b) The regulations in this part and 43 CFR part 3170, including subparts 3173, 3174, and 3175 relating to site security, measurement of oil and gas, reporting of production and operations, and assessments or penalties for non-compliance with such requirements, are applicable to all wells and facilities on State or privately owned lands committed to a unit or communitization agreement, which include Federal or Indian lease interests, notwithstanding any provision of a unit or communitization agreement to the contrary.

4. Amend § 3162.3-2 by adding paragraph (d) to read as follows:

§ 3162.3-2 Subsequent well operations.

* * * * *

(d) For details on how to apply for approval of a facility measurement point; approval for surface or subsurface commingling from different leases, unit participating areas and communitized areas; or approval for off-lease measurement, see 43 CFR 3173.12, 3173.15, and 3173.23, respectively.

5. Amend § 3162.4-1 by revising paragraphs (a) and (d) and adding paragraph (e) to read as follows:

§ 3162.4-1 Well records and reports.

(a) The operator must keep accurate and complete records with respect to:

(1) All lease operations, including, but not limited to, drilling, producing, redrilling, repairing, plugging back, and abandonment operations;

(2) Production facilities and equipment (including schematic diagrams as required by applicable orders and notices); and

(3) Determining and verifying the quantity, quality, and disposition of production from or allocable to Federal or Indian leases (including source records).

* * * * *

(d) All records and reports required by this section must be maintained for the following time periods:

(1) For Federal leases and units or communitized areas that include Federal leases, but do not include Indian leases:

(i) Seven years after the records are generated; unless,

(ii) A judicial proceeding or demand involving such records is timely commenced, in which case the record holder must maintain such records until the final nonappealable decision in such judicial proceeding is made, or with respect to that demand is rendered, unless the Secretary or the applicable delegated State authorizes in writing an earlier release of the requirement to maintain such records.

(2) For Indian leases, and units or communitized areas that include Indian leases, but do not include Federal leases:

(i) Six years after the records are generated; unless,

(ii) The Secretary or his/her designee notifies the record holder that the Department has initiated or is participating in an audit or investigation involving such records, in which case the record holder must maintain such records until the Secretary or his/her designee releases the record holder from the obligation to maintain the records.

(3) For units and communitized areas that include both Federal and Indian leases, 6 years after the records are generated, unless the Secretary or his/her designee has notified the record holder within those 6 years that an audit or investigation involving such records has been initiated, then:

(i) If a judicial proceeding or demand is commenced within 7 years after the records are generated, the record holder must retain all records regarding production from the lease, unit or communitization agreement until the final nonappealable decision in such judicial proceeding is made, or with respect to that demand is rendered, unless the Secretary or his/her designee authorizes in writing a release of the requirement to maintain such records before a final nonappealable decision is made or rendered;

(ii) If a judicial proceeding or demand is not commenced within 7 years after the records are generated, the record holder must retain all records regarding production from the unit or communitized area until the Secretary or his/her designee releases the record holder from the obligation to maintain the records.

(e) Record holders include lessees, operators, purchasers, transporters, and any other person directly involved in producing, transporting, purchasing, or selling, including measuring, oil or gas through the point of royalty measurement or the point of first sale, whichever is later. Record holders must maintain records generated during or for the period for which the lessee or operator has an interest in or conducted operations on the lease, or in which a person is involved in transporting, purchasing, or selling production from the lease, for the period of time required in paragraph (d) of this section.

§ 3162.4-3 [Removed]

6. Remove § 3162.4-3.

7. Amend § 3162.6 as follows:

a. In paragraph (a), revise the word “indentification” to read “identification”; and

b. Revise paragraphs (b) and (c), redesignate paragraph (d) as paragraph (e), and add a new paragraph (d).

The revisions and addition read as follows:

§ 3162.6 Well and facility identification.

* * * * *

(b) For wells located on Federal and Indian lands, the operator must properly identify, by a sign in a conspicuous place, each well, other than those permanently abandoned. The well sign must include the well number, the name of the operator, the lease serial number, and the surveyed location (the quarter-quarter section, section, township and range or other authorized survey designation acceptable to the authorized officer, such as metes and bounds or longitude and latitude). When specifically requested by the authorized officer, the sign must include the unit or communitization agreement name or number. The authorized officer may also require the sign to include the name of the Indian allottee lessor(s) preceding the lease serial number.

(c) All facilities at which oil or gas produced from a Federal or Indian lease is stored, measured, or processed must be clearly identified with a sign that contains the name of the operator, the lease serial number or communitization or unit agreement identification number, as appropriate, and the surveyed location (the quarter-quarter section, section, township and range or other authorized survey designation acceptable to the authorized officer, such as metes and bounds or longitude and latitude). On Indian leases, the sign also must include the name of the appropriate tribe and whether the lease is tribal or allotted. For situations of one tank battery servicing one well in the same location, the requirements of this paragraph and paragraph (b) of this section may be met by one sign as long as it includes the information required by both paragraphs. In addition, each storage tank must be clearly identified by a unique number. With regard to the quarter-

quarter designation and the unique tank number, any such designation established by State law or regulation satisfies this requirement.

(d) All signs must be maintained in legible condition and must be clearly apparent to any person at or approaching the storage, measurement, or transportation point.

* * * * *

§ 3162.7-1 [Amended]

8. Amend § 3162.7-1 by removing paragraph (f).

§ 3162.7-5 [Removed]

9. Remove § 3162.7-5.

10. Amend § 3163.2 by:

a. Revising paragraphs (a), (b), (d), (e) introductory text, and (f) introductory text;

b. Removing paragraph (g);

c. Re-designating paragraphs (h) and (i) as paragraphs (g) and (h);

d. Revising newly re-designated paragraph (h); and

e. Removing paragraphs (j) and (k).

The revisions read as follows:

§ 3163.2 Civil penalties.

(a)(1) Whenever any person fails or refuses to comply with any applicable requirements of the Federal Oil and Gas Royalty Management Act, any mineral leasing law, any regulation thereunder, or the terms of any lease or permit issued thereunder, the authorized officer will notify the person in writing of the violation, unless the violation was discovered and reported to the authorized officer by the liable person or the notice was previously issued under § 3163.1.

(2) Whenever a purchaser or transporter who is not an operating rights owner or operator fails or refuses to comply with 30 U.S.C. 1713 or applicable rules or regulations regarding records relevant to determining the quality, quantity, and disposition of oil or gas produced from or allocable to a Federal or Indian oil and gas lease, the authorized officer will notify the purchaser or transporter, as appropriate, in writing of the violation.

(b)(1) If the violation specified in paragraph (a) is not corrected within 20 days of such notice or report, or such longer time as the authorized officer may agree to in writing, the person will be liable for a civil penalty of up to $1,031 per violation for each day such violation continues, dating from the date of such notice or report. Any amount imposed and paid as assessments under § 3163.1(a)(1) will be deducted from penalties under this section.

(2) If the violation specified in paragraph (a) of this section is not corrected within 40 days of such notice or report, or a longer period as the authorized officer may agree to in writing, the person will be liable for a civil penalty of up to $10,314 per violation for each day the violation continues, dating from the date of such notice or report. Any amount imposed and paid as assessments under § 3163.1(a)(1) will be deducted from penalties under this section.

* * * * *

(d) Whenever a transporter fails to permit inspection for proper documentation by any authorized representative, as provided in § 3162.7-1(c) of this chapter, the transporter is liable for a civil penalty of up to $1,031 per day for the violation, dating from the date of notice of the failure to permit inspection and continuing until the proper documentation is provided. If the violation continues beyond 20 days, the authorized officer will revoke

the transporter's authority to remove crude oil produced from, or allocated to, any Federal or Indian lease under the authority of that authorized officer. This revocation of the transporter's authority will continue until the transporter provides proper documentation and pays any related penalty.

(e) Any person is liable for a civil penalty of up to $20,628 per violation for each day such violation continues, if the person:

* * * * *

(f) Any person is liable for a civil penalty of up to $51,570 per violation for each day such violation continues, if the person:

* * * * *

(g) On a case-by-case basis, the Secretary may compromise or reduce civil penalties under this section. In compromising or reducing the amount of a civil penalty, the Secretary will state on the record the reasons for such determination.

(h) Civil penalties provided by this section are supplemental to, and not in derogation of, any other penalties or assessments for noncompliance in any other provision of law, except as provided in paragraphs (a) and (b) of this section.

§ 3164.1 [Amended]

11. Amend § 3164.1, in paragraph (b), by removing the third entry in the chart (the reference to Order No. 3, Site Security).

12. Amend § 3165.3 by revising paragraphs (a) and (d) to read as follows:

§ 3165.3 Notice, State Director review and hearing on the record.

(a) Notice. (1) Whenever any person fails to comply with any provisions of the lease, the regulations in this part, applicable orders or notices, or any other appropriate order of

the authorized officer, the authorized officer will issue a written notice or order to the appropriate party and the lessee(s) to remedy any defaults or violations.

(2) Whenever any purchaser or transporter, who is not an operating rights owner or operator, fails or refuses to comply with 30 U.S.C. 1713 or applicable rules or regulations regarding records relevant to determining the quality, quantity, and disposition of oil or gas produced from or allocable to a Federal or Indian oil and gas lease, applicable orders or notices, or any other appropriate orders of the authorized officer, the authorized officer will give written notice or order to the purchaser or transporter to remedy any violations.

(3) Written orders or a notice of violation, assessment, or proposed penalty will be issued and served by personal service by the authorized officer, or by certified mail, return receipt requested. Service will be deemed to occur when the document is received or 7 business days after the date it is mailed, whichever is earlier.

(4) Any person may designate a representative to receive any notice of violation, order, assessment, or proposed penalty on that person's behalf.

(5) In the case of a major violation, the authorized officer will make a good faith effort to contact such designated representative by telephone, to be followed by a written notice or order. Receipt of a notice or order will be deemed to occur at the time of such verbal communication, and the time of notice and the name of the receiving party will be documented in the file. If the good faith effort to contact the designated representative is unsuccessful, notice of the major violation or order may be given to any person conducting or supervising operations subject to the regulations in this part.

(6) In the case of a minor violation, the authorized officer will only provide a written notice or order to the designated representative.

(7) A copy of all orders, notices, or instructions served on any contractor or field employee or designated representative will also be mailed to the operator. Any notice involving a civil penalty against an operator will be mailed to the operator, with a copy to the operating rights owner.

* * * * *

(d) Action on request for State Director review. The State Director will issue a final decision within 10 business days after the receipt of a complete request for administrative review or, where oral presentation has been made, within 10 business days after the oral presentation. The State Director's decision represents the final Bureau decision from which further review may be obtained as provided in paragraph (c) of this section for proposed penalties, and in § 3165.4 for all other decisions.

* * * * *

13. Add part 3170 to read as follows:

PART 3170 – ONSHORE OIL AND GAS PRODUCTION

Subpart 3170 – Onshore Oil and Gas Production: General

Sec.

3170.1 Authority.

3170.2 Scope.

3170.3 Definitions and acronyms.

3170.4 Prohibitions against by-pass and tampering.

3170.5 [Reserved].

3170.6 Variances.

3170.7 Required recordkeeping, records retention, and records submission.

3170.8 Appeal procedures.

3170.9 Enforcement.

Subpart 3171 – [Reserved]

Subpart 3172 – [Reserved]

Subpart 3173 -- Requirements for Site Security and Production Handling

3173.1 Definitions and acronyms.

3173.2 Storage and sales facilities – seals.

3173.3 Oil measurement system components - seals.

3173.4 Federal seals.

3173.5 Removing production from tanks for sale and transportation by truck.

3173.6 Water-draining operations.

3173.7 Hot oiling, clean-up, and completion operations.

3173.8 Report of theft or mishandling of production.

3173.9 Required recordkeeping for inventory and seal records.

3173.10 Form 3160-5, Sundry Notices and Reports on Wells.

3173.11 Site facility diagram.

3173.12 Applying for a facility measurement point.

3173.13 Requirements for approved facility measurement points.

3173.14 Conditions for commingling and allocation approval (surface and downhole).

3173.15 Applying for a commingling and allocation approval.

3173.16 Existing commingling and allocation approvals.

3173.17 Relationship of a commingling and allocation approval to royalty-free use of production.

3173.18 Modification of a commingling and allocation approval.

3173.19 Effective date of a commingling and allocation approval.

3173.20 Terminating a commingling and allocation approval.

3173.21 Combining production downhole in certain circumstances.

3173.22 Requirements for off-lease measurement.

3173.23 Applying for off-lease measurement.

3173.24 Effective date of an off-lease measurement approval.

3173.25 Existing approved off-lease measurement.

3173.26 Relationship of off-lease measurement approval to royalty-free use of production.

3173.27 Termination of off-lease measurement approval.

3173.28 Instances not constituting off-lease measurement, for which no approval is required.

3173.29 Immediate assessments for certain violations.

Appendix A to subpart 3173

Authority: 25 U.S.C. 396d and 2107; 30 U.S.C. 189, 306, 359, and 1751; and 43 U.S.C. 1732(b), 1733, and 1740.

Subpart 3170 – Onshore Oil and Gas Production: General

§ 3170.1 Authority.

The authorities for promulgating the regulations in this part are the Mineral Leasing Act, 30 U.S.C. 181 et seq.; the Mineral Leasing Act for Acquired Lands, 30 U.S.C. 351 et seq.; the Federal Oil and Gas Royalty Management Act, 30 U.S.C. 1701 et seq.; the Indian Mineral Leasing Act, 25 U.S.C. 396a et seq.; the Act of March 3, 1909, 25 U.S.C.

396; the Indian Mineral Development Act, 25 U.S.C. 2101 et seq.; and the Federal Land Policy and Management Act, 43 U.S.C. 1701 et seq. Each of these statutes gives the Secretary the authority to promulgate necessary and appropriate rules and regulations governing Federal and Indian (except Osage Tribe) oil and gas leases. See 30 U.S.C. 189; 30 U.S.C. 359; 25 U.S.C. 396d; 25 U.S.C. 396; 25 U.S.C. 2107; and 43 U.S.C. 1740. Under Secretarial Order Number 3087, dated December 3, 1982, as amended on February 7, 1983 (48 FR 8983), and the Departmental Manual (235 DM 1.1), the Secretary has delegated regulatory authority over onshore oil and gas development on Federal and Indian (except Osage Tribe) lands to the BLM. For Indian leases, the delegation of authority to the BLM is reflected in 25 CFR parts 211, 212, 213, 225, and 227. In addition, as authorized by 43 U.S.C. 1731(a), the Secretary has delegated to the BLM regulatory responsibility for oil and gas operations on Indian lands. 235 DM 1.1.K.

§ 3170.2 Scope.

The regulations in this part apply to:

(a) All Federal onshore and Indian oil and gas leases (other than those of the Osage Tribe);

(b) Indian Mineral Development Act (IMDA) agreements for oil and gas, unless specifically excluded in the agreement or unless the relevant provisions of the rule are inconsistent with the agreement;

(c) Leases and other business agreements for the development of tribal energy resources under a Tribal Energy Resource Agreement entered into with the Secretary, unless specifically excluded in the lease, other business agreement, or Tribal Energy Resource Agreement;

(d) State or private tracts committed to a federally approved unit or communitization agreement (CA) as defined by or established under 43 CFR subpart 3105 or 43 CFR part 3180; and

(e) All onshore facility measurement points where oil or gas produced from the leases or agreements identified earlier in this section is measured.

§ 3170.3 Definitions and acronyms.

(a) As used in this part, the term:

Allocated or allocation means a method or process by which production is measured at a central point and apportioned to the individual lease, or unit Participating Area (PA), or CA from which the production originated.

API (followed by a number) means the American Petroleum Institute Manual of Petroleum Measurement Standards, with the number referring to the Chapter and Section in that manual.

Audit trail means all source records necessary to verify and recalculate the volume and quality of oil or gas production measured at a facility measurement point (FMP) and reported to the Office of Natural Resources Revenue (ONRR).

Authorized officer (AO) has the same meaning as defined in 43 CFR 3000.0-5.

Averaging period means the previous 12 months or the life of the meter, whichever is shorter. For FMPs that measure production from a newly drilled well, the averaging period excludes production from that well that occurred in or before the first full month of production. (For example, if an oil FMP and a gas FMP were installed to measure only the production from a new well that first produced on April 10, the averaging period for

this FMP would not include the production that occurred in April (partial month) and May (full month) of that year.)

Bias means a shift in the mean value of a set of measurements away from the true value of what is being measured.

By-pass means any piping or other arrangement around or avoiding a meter or other measuring device or method (or component thereof) at an FMP that allows oil or gas to flow without measurement. Equipment that permits the changing of the orifice plate of a gas meter without bleeding the pressure off the gas meter run (e.g., senior fitting) is not considered to be a by-pass.

Commingling, for production accounting and reporting purposes, means combining, before the point of royalty measurement, production from more than one lease, unit PA, or CA, or production from one or more leases, unit PAs, or CAs with production from State, local governmental, or private properties that are outside the boundaries of those leases, unit PAs, or CAs. Combining production from multiple wells within a single lease, unit PA, or CA, or combining production downhole from different geologic formations within the same lease, unit PA, or CA, is not considered commingling for production accounting purposes.

Communitized area means the area committed to a BLM approved communitization agreement.

Communitization agreement (CA) means an agreement to combine a lease or a portion of a lease that cannot otherwise be independently developed and operated in conformity with an established well spacing or well development program, with other tracts for purposes of cooperative development and operations.

Condition of Approval (COA) means a site-specific requirement included in the approval of an application that may limit or modify the specific actions covered by the application. Conditions of approval may minimize, mitigate, or prevent impacts to public lands or resources.

Days means consecutive calendar days, unless otherwise indicated.

Facility means:

(i) A site and associated equipment used to process, treat, store, or measure production from or allocated to a Federal or Indian lease, unit PA, or CA that is located upstream of or at (and including) the approved point of royalty measurement; and

(ii) A site and associated equipment used to store, measure, or dispose of produced water that is located on a lease, unit, or communitized area.

Facility measurement point (FMP) means a BLM-approved point where oil or gas produced from a Federal or Indian lease, unit PA, or CA is measured and the measurement affects the calculation of the volume or quality of production on which royalty is owed. FMP includes, but is not limited to, the approved point of royalty measurement and measurement points relevant to determining the allocation of production to Federal or Indian leases, unit PAs, or CAs. However, allocation facilities that are part of a commingling and allocation approval under § 3173.15 or that are part of a commingling and allocation approval approved after July 9, 2013, are not FMPs. An FMP also includes a meter or measurement facility used in the determination of the volume or quality of royalty-bearing oil or gas produced before BLM approval of an FMP under § 3173.12 of this part. An FMP must be located on the lease, unit, or communitized area unless the BLM approves measurement off the lease, unit, or CA.

The BLM will not approve a gas processing plant tailgate meter located off the lease, unit, or CA, as an FMP.

Gas means any fluid, either combustible or noncombustible, hydrocarbon or non-hydrocarbon, that has neither independent shape nor volume, but tends to expand indefinitely and exists in a gaseous state under metered temperature and pressure conditions.

Incident of Noncompliance (INC) means documentation that the BLM issues that identifies violations and notifies the recipient of the notice of required corrective actions.

Lease has the same meaning as defined in 43 CFR 3160.0-5.

Lessee has the same meaning as defined in 43 CFR 3160.0-5.

NIST traceable means an unbroken and documented chain of comparisons relating measurements from field or laboratory instruments to a known standard maintained by the National Institute of Standards and Technology (NIST).

Notice to lessees and operators (NTL) has the same meaning as defined in 43 CFR 3160.0-5.

Off-lease measurement means measurement at an FMP that is not located on the lease, unit, or communitized area from which the production came.

Oil means a mixture of hydrocarbons that exists in the liquid phase at the temperature and pressure at which it is measured. Condensate is considered to be oil for purposes of this part. Gas liquids extracted from a gas stream upstream of the approved point of royalty measurement are considered to be oil for purposes of this part.

(i) Clean Oil or Pipeline Oil means oil that is of such quality that it is acceptable to normal purchasers.

(ii) Slop oil means oil that is of such quality that it is not acceptable to normal purchasers and is usually sold to oil reclaimers. Oil that can be made acceptable to normal purchasers through special treatment that can be economically provided at existing or modified facilities or using portable equipment at or upstream of the FMP is not slop oil.

(iii) Waste oil means oil that has been determined by the AO or authorized representative to be of such quality that it cannot be treated economically and put in a marketable condition with existing or modified lease facilities or portable equipment, cannot be sold to reclaimers, and has been determined by the AO to have no economic value.

Operator has the same meaning as defined in 43 CFR 3160.0-5.

Participating area (PA) has the same meaning as defined in 43 CFR 3180.0-5.

Point of royalty measurement means a BLM-approved FMP at which the volume and quality of oil or gas which is subject to royalty is measured. The point of royalty measurement is to be distinguished from meters that determine only the allocation of production to particular leases, unit PAs, CAs, or non-Federal and non-Indian properties. The point of royalty measurement is also known as the point of royalty settlement.

Production means oil or gas removed from a well bore and any products derived therefrom.

Production Measurement Team (PMT) means a panel of members from the BLM (which may include BLM-contracted experts) that reviews changes in industry measurement technology, methods, and standards to determine whether regulations should be updated, and provides guidance on measurement technologies and methods not

addressed in current regulation. The purpose of the PMT is to act as a central advisory body to ensure that oil and gas produced from Federal and Indian leases is accurately measured and properly reported.

Purchaser means any person or entity who legally takes ownership of oil or gas in exchange for financial or other consideration.

Source record means any unedited and original record, document, or data that is used to determine volume and quality of production, regardless of format or how it was created or stored (e.g., paper or electronic). It includes, but is not limited to, raw and unprocessed data (e.g., instantaneous and continuous information used by flow computers to calculate volumes); gas charts; measurement tickets; calibration, verification, prover, and configuration reports; pumper and gauger field logs; volume statements; event logs; seal records; and gas analyses.

Statistically significant describes a difference between two data sets that exceeds the threshold of significance.

Tampering means any deliberate adjustment or alteration to a meter or measurement device, appropriate valve, or measurement process that could introduce bias into the measurement or affect the BLM's ability to independently verify volumes or qualities reported.

Threshold of significance means the maximum difference between two data sets (a and b) that can be attributed to uncertainty effects. The threshold of significance is determined as follows:

$$T_s = \sqrt{U_a^2 + U_b^2}$$

where:

T_s = Threshold of significance, in percent

U_a = Uncertainty (95 percent confidence) of data set a, in percent

U_b = Uncertainty (95 percent confidence) of data set b, in percent

Total observed volume (TOV) means the total measured volume of all oil, sludges, sediment and water, and free water at the measured or observed temperature and pressure.

Transporter means any person or entity who legally moves or transports oil or gas from an FMP.

Uncertainty means the statistical range of error that can be expected between a measured value and the true value of what is being measured. Uncertainty is determined at a 95 percent confidence level for the purposes of this part.

Unit means the land within a unit area as defined in 43 CFR 3180.0-5.

Unit PA means the unit participating area, if one is in effect, the exploratory unit if there is no associated participating area, or an enhanced recovery unit.

Variance means an approved alternative to a provision or standard of a regulation, Onshore Oil and Gas Order, or NTL.

(b) As used in this part, the following additional acronyms apply:

API means American Petroleum Institute.

BLM means the Bureau of Land Management.

Btu means British thermal unit.

CMS means Coriolis Measurement System.

LACT means lease automatic custody transfer.

OGOR means Oil and Gas Operations Report (Form ONRR-4054 or any successor report).

ONRR means the Office of Natural Resources Revenue, U.S. Department of the Interior, and includes any successor agency.

S&W means sediment and water.

WIS means Well Information System or any successor electronic filing system.

§ 3170.4 Prohibitions against by-pass and tampering.

(a) All by-passes are prohibited.

(b) Tampering with any measurement device, component of a measurement device, or measurement process is prohibited.

(c) Any by-pass or tampering with a measurement device, component of a measurement device, or measurement process may, together with any other remedies provided by law, result in an assessment of civil penalties for knowingly or willfully:

(1) Taking, removing, transporting, using, or diverting oil or gas from a lease site without valid legal authority under 30 U.S.C. 1719(d)(2) and 43 CFR 3163.2(f)(2); or

(2) Preparing, maintaining, or submitting false, inaccurate, or misleading reports, records, or information under 30 U.S.C. 1719(d)(1) and 43 CFR 3163.2(f)(1).

§ 3170.5 [Reserved]

§ 3170.6 Variances.

(a) Any party subject to a requirement of a regulation in this part may request a variance from that requirement.

(1) A request for a variance must include the following:

(i) Identification of the specific requirement from which the variance is requested;

(ii) Identification of the length of time for which the variance is requested, if applicable;

(iii) An explanation of the need for the variance;

(iv) A detailed description of the proposed alternative means of compliance;

(v) A showing that the proposed alternative means of compliance will produce a result that meets or exceeds the objectives of the applicable requirement for which the variance is requested; and

(vi) The FMP number(s) for which the variance is requested, if applicable.

(2) A request for a variance must be submitted as a separate document from any plans or applications. A request for a variance that is submitted as part of a master development plan, application for permit to drill, right-of-way application, or application for approval of other types of operations, rather than submitted separately, will not be considered. Approval of a plan or application that contains a request for a variance does not constitute approval of the variance. A separate request for a variance may be submitted simultaneously with a plan or application. For plans or applications that are contingent upon the approval of the variance request, the BLM encourages the simultaneous submission of the variance request and the plan or application.

(3) The party requesting the variance must file the request and any supporting documents using WIS. If electronic filing is not possible or practical, the operator may submit a request for variance on the Form 3160-5, Sundry Notices and Reports on Wells (Sundry Notice) to the BLM Field Office having jurisdiction over the lands described in the application.

(4) The AO, after considering all relevant factors, may approve the variance, or approve it with COAs, only if the AO determines that:

(i) The proposed alternative means of compliance meets or exceeds the objectives of the applicable requirement(s) of the regulation;

(ii) Approving the variance will not adversely affect royalty income and production accountability; and

(iii) Issuing the variance is consistent with maximum ultimate economic recovery, as defined in 43 CFR 3160.0-5.

(5) The decision whether to grant or deny the variance request is entirely within the BLM's discretion.

(6) A variance from the requirements of a regulation in this part does not constitute a variance from provisions of other regulations, including Onshore Oil and Gas Orders.

(b) The BLM reserves the right to rescind a variance or modify any COA of a variance due to changes in Federal law, technology, regulation, BLM policy, field operations, noncompliance, or other reasons. The BLM will provide a written justification if it rescinds a variance or modifies a COA.

§ 3170.7 Required recordkeeping, records retention, and records submission.

(a) Lessees, operators, purchasers, transporters, and any other person directly involved in producing, transporting, purchasing, selling, or measuring oil or gas through the point of royalty measurement or the point of first sale, whichever is later, must retain all records, including source records, that are relevant to determining the quality, quantity, disposition, and verification of production attributable to Federal or Indian leases for the periods prescribed in paragraphs (c) through (e) of this section.

(b) This retention requirement applies to records generated during or for the period for which the lessee or operator has an interest in or conducted operations on the lease, or in which a person is involved in transporting, purchasing, or selling production from the lease.

(c) For Federal leases, and units or CAs that include Federal leases, but do not include Indian leases, the record holder must maintain records for:

(1) Seven years after the records are generated; unless,

(2) A judicial proceeding or demand involving such records is timely commenced, in which case the record holder must maintain such records until the final nonappealable decision in such judicial proceeding is made, or with respect to that demand is rendered, unless the Secretary or his/her designee or the applicable delegated State authorizes in writing an earlier release of the requirement to maintain such records.

(d) For Indian leases, and units or CAs that include Indian leases, but do not include Federal leases, the record holder must maintain records for:

(1) Six years after the records are generated; unless,

(2) The Secretary or his/her designee notifies the record holder that the Department of the Interior has initiated or is participating in an audit or investigation involving such records, in which case the record holder must maintain such records until the Secretary or his/her designee releases the record holder from the obligation to maintain the records.

(e) For units and communitized areas that include both Federal and Indian leases, 6 years after the records are generated. If the Secretary or his/her designee has notified the record holder within those 6 years that an audit or investigation involving such records has been initiated, then:

(1) If a judicial proceeding or demand is commenced within 7 years after the records are generated, the record holder must retain all records regarding production from the lease, unit PA, or CA until the final nonappealable decision in such judicial proceeding is made, or with respect to that demand is rendered, unless the Secretary or his/her designee authorizes in writing a release of the requirement to maintain such records before a final nonappealable decision is made or rendered.

(2) If a judicial proceeding or demand is not commenced within 7 years after the records are generated, the record holder must retain all records regarding production from the unit or communitized area until the Secretary or his/her designee releases the record holder from the obligation to maintain the records;

(f) The lessee, operator, purchaser, or transporter must maintain an audit trail.

(g) All records, including source records, that are used to determine quality, quantity, disposition, and verification of production attributable to a Federal or Indian lease, unit PA, or CA, must include the FMP number or the lease, unit PA, or CA number, along with a unique equipment identifier (e.g., a unique tank identification number and meter station number), and the name of the company that created the record. For all facilities existing prior to the assignment of an FMP number, all records must include the following information:

(1) The name of the operator;

(2) The lease, unit PA, or CA number; and

(3) The well or facility name and number.

(h) Upon request of the AO, the operator, purchaser, or transporter must provide such records to the AO as may be required by regulation, written order, Onshore Order, NTL, or COA.

(i) All records must be legible.

(j) All records requiring a signature must also have the signer's printed name.

§ 3170.8 Appeal procedures.

(a) BLM decisions, orders, assessments, or other actions under the regulations in this part are administratively appealable under the procedures prescribed in 43 CFR 3165.3(b), 3165.4, and part 4.

(b) For any recommendation made by the PMT, and approved by the BLM, a party affected by such recommendation may file a request for discretionary review by the Assistant Secretary for Land and Minerals Management. The Assistant Secretary may delegate this review function as he or she deems appropriate, in which case the affected party's application for discretionary review must be made to the person or persons to whom the Assistant Secretary's review function has been delegated.

§ 3170.9 Enforcement.

Noncompliance with any of the requirements of this part or any order issued under this part may result in enforcement actions under 43 CFR subpart 3163 or any other remedy available under applicable law or regulation.

Subpart 3171 – [Reserved]

Subpart 3172 – [Reserved]

Subpart 3173 – Requirements for Site Security and Production Handling

§ 3173.1 Definitions and acronyms.

(a) As used in this subpart, the term:

Access means the ability to:

(i) Add liquids to or remove liquids from any tank or piping system, through a valve or combination of valves or by moving liquids from one tank to another tank; or

(ii) Enter any component in a measuring system affecting the accuracy of the measurement of the quality or quantity of the liquid being measured.

Appropriate valves means those valves that must be sealed during the production or sales phase (e.g., fill lines, equalizer, overflow lines, sales lines, circulating lines, or drain lines).

Authorized representative (AR) has the same meaning as defined in 43 CFR 3160.0-5.

Business day means any day Monday through Friday, excluding Federal holidays.

Commingling and allocation approval (CAA) means a formal allocation agreement to combine production from two or more sources (leases, unit PAs, CAs, or non-Federal or non-Indian properties) before that product reaches an FMP.

Economically marginal property means a lease, unit PA, or CA that does not generate sufficient revenue above operating costs, such that a prudent operator would opt to plug a well or shut-in the lease, unit PA, or CA instead of making the investments needed to achieve non-commingled measurement of production from that lease, unit PA, or CA. A lease, unit PA, or CA may be regarded as economically marginal if the operator demonstrates that the expected revenue (net any associated operating costs) generated from crude oil or natural gas production volumes on that property is not sufficient to cover the nominal cost of the capital expenditures required to achieve measurement of non-commingled production of oil or gas from that property over a payout period of 18

months. A lease, unit PA, or CA can also be considered economically marginal if the operator demonstrates that its royalty net present value (RNPV), or the discounted value of the Federal or Indian royalties collected on revenue earned from crude oil or natural gas production on the lease, unit PA, or CA, over the expected life of the equipment that would need to be installed to achieve non-commingled measurement volumes, is less than the capital cost of purchasing and installing this equipment. Both the payout period and the RNPV are determined separately for each lease, unit PA, or CA oil or gas FMP. Additionally, oil FMPs are evaluated using estimated revenue (net of taxes and operating costs) from crude oil production, as defined in this section, while gas FMPs are evaluated using estimated revenue (net of taxes and operating costs) from natural gas production, as defined in this section.

Effectively sealed means the placement of a seal in such a manner that the sealed component cannot be accessed, moved, or altered without breaking the seal.

Free water means the measured volume of water that is present in a container and that is not in suspension in the contained liquid at observed temperature.

Land description means a location surveyed in accordance with the U.S. Department of the Interior's *Manual of Surveying Instructions* (2009), that includes the quarter-quarter section, section, township, range, and principal meridian, or other authorized survey designation acceptable to the AO, such as metes-and-bounds, or latitude and longitude.

Maximum ultimate economic recovery has the same meaning as defined in 43 CFR 3160.0-5.

Mishandling means failing to measure or account for removal of production from a facility.

Payout period means the time required, in months, for the cost of an investment in an oil or gas FMP for a specific lease, unit PA, or CA to be covered by the nominal revenue earned from crude oil production, for an oil FMP, or natural gas production, for a gas FMP, minus taxes, royalties, and any operating and variable costs. The payout period is determined separately for each oil or gas FMP for a given lease, unit PA, or CA.

Permanent measurement facility means all equipment constructed or installed and used on-site for 6 months or longer, for the purpose of determining the quantity, quality, or storage of production, and which meets the definition of FMP under § 3170.3.

Piping means a tubular system (e.g., metallic, plastic, fiberglass, or rubber) used to move fluids (liquids and gases).

Production phase means that event during which oil is delivered directly to or through production equipment to the storage facilities and includes all operations at the facility other than those defined by the sales phase.

Royalty Net Present Value (RNPV) means the net present value of all Federal or Indian royalties paid on revenue earned from crude oil production or natural gas production from an oil or gas FMP for a given lease, unit PA, or CA over the expected life of metering equipment that must be installed for that lease, unit PA, or CA to achieve non-commingled measurement.

Sales phase means that event during which oil is removed from storage facilities for sale at an FMP.

Seal means a uniquely numbered device that completely secures either a valve or those components of a measuring system that affect the quality or quantity of the oil being measured.

(b) As used in this subpart, the following additional acronyms apply:

BIA means the Bureau of Indian Affairs.

BMP means Best Management Practice.

§ 3173.2 Storage and sales facilities – seals.

(a) All lines entering or leaving any oil storage tank must have valves capable of being effectively sealed during the production and sales phases unless otherwise provided under this subpart. During the production phase, all appropriate valves that allow unmeasured production to be removed from storage must be effectively sealed in the closed position. During any other phase (sales, water drain, or hot oiling), and prior to taking the top tank gauge measurement, all appropriate valves that allow unmeasured production to enter or leave the sales tank must be effectively sealed in the closed position (see Appendix A to subpart 3173). Each unsealed or ineffectively sealed appropriate valve is a separate violation.

(b) Valves or combinations of valves and tanks that provide access to the production before it is measured for sales are considered appropriate valves and are subject to the seal requirements of this subpart (see Appendix A to subpart 3173). If there is more than one valve on a line from a tank, the valve closest to the tank must be sealed. All appropriate valves must be in an operable condition and accurately reflect whether the valve is open or closed.

(c) The following are not considered appropriate valves and are not subject to the sealing requirements of this subpart:

(1) Valves on production equipment (e.g., separator, dehydrator, gun barrel, or wash tank);

(2) Valves on water tanks, provided that the possibility of access to production in the sales and storage tanks does not exist through a common circulating, drain, overflow, or equalizer system;

(3) Valves on tanks that contain oil that has been determined by the AO or AR to be waste or slop oil;

(4) Sample cock valves used on piping or tanks with a Nominal Pipe Size of 1 inch or less in diameter;

(5) Fill-line valves during shipment when a single tank with a nominal capacity of 500 barrels (bbl) or less is used for collecting marginal production of oil produced from a single well (i.e., production that is less than 3 bbl per day). All other seal requirements of this subpart apply;

(6) Gas line valves used on piping with a Nominal Pipe Size of 1 inch or less used as tank bottom "roll" lines, provided there is no access to the contents of the storage tank and the roll lines cannot be used as equalizer lines;

(7) Valves on tank heating systems that use a fluid other than the contents of the storage tank (i.e., steam, water, or glycol);

(8) Valves used on piping with a Nominal Pipe Size of 1 inch or less connected directly to the pump body or used on pump bleed off lines;

(9) Tank vent-line valves; and

(10) Sales, equalizer, or fill-line valves on systems where production may be removed only through approved oil metering systems (e.g., LACT or CMS). However, any valve that allows access for removing oil before it is measured through the metering system must be effectively sealed (see Appendix A to subpart 3173).

(d) Tampering with any appropriate valve is prohibited. Tampering with an appropriate valve may result in an assessment of civil penalties for knowingly or willfully preparing, maintaining, or submitting false, inaccurate, or misleading reports, records, or written information under 30 U.S.C. 1719(d)(1) and 43 CFR 3163.2(f)(1), or knowingly or willfully taking, removing, transporting, using, or diverting oil or gas from a lease site without valid legal authority under 30 U.S.C. 1719(d)(2) and 43 CFR 3163.2(f)(2), together with any other remedies provided by law.

§ 3173.3 Oil measurement system components - seals.

(a) Components used for quantity or quality determination of oil must be effectively sealed to indicate tampering, including, but not limited to, the following components of LACT meters (see § 3174.8(a)) and CMSs (see § 3174.9(e)) of this part):

(1) Sample probe;

(2) Sampler volume control;

(3) All valves on lines entering or leaving the sample container, excluding the safety pop-off valve (if so equipped). Each valve must be sealed in the open or closed position, as appropriate;

(4) Meter assembly, including the counter head and meter head;

(5) Temperature averager;

(6) LACT meters or CMS;

(7) Back pressure valve pressure adjustment downstream of the meter;

(8) Any drain valves in the system;

(9) Manual-sampling valves (if so equipped);

(10) Valves on diverter lines larger than 1 inch in nominal diameter;

(11) Right-angle drive;

(12) Totalizer; and

(13) Prover connections.

(b) Each missing or ineffectively sealed component is a separate violation.

§ 3173.4 Federal seals.

(a) In addition to any INC issued for a seal violation, the AO or AR may place one or more Federal seals on any appropriate valve, sealing device, or oil-metering-system component that does not comply with the requirements in §§ 3173.2 and 3173.3 of this subpart if the operator is not present, refuses to cooperate with the AO or AR, or is unable to correct the noncompliance.

(b) The placement of a Federal seal does not constitute compliance with the requirements of §§ 3173.2 and 3173.3 of this subpart.

(c) A Federal seal may not be removed without the approval of the AO or AR.

§ 3173.5 Removing production from tanks for sale and transportation by truck.

(a) When a single truck load constitutes a completed sale, the driver must possess documentation containing the information required in § 3174.12 of this part.

(b) When multiple truckloads are involved in a sale and the oil measurement method is based on the difference between the opening and closing gauges, the driver of the last truck must possess the documentation containing the information required in § 3174.12 of this part. All other drivers involved in the sale must possess a trip log or manifest.

(c) After the seals have been broken, the purchaser or transporter is responsible for the entire contents of the tank until it is resealed.

§ 3173.6 Water-draining operations.

When water is drained from a production storage tank, the operator, purchaser, or transporter, as appropriate, must document the following information:

(a) Federal or Indian lease, unit PA, or CA number(s);

(b) The tank location by land description;

(c) The unique tank number and nominal capacity;

(d) Date of the opening gauge;

(e) Opening gauge (gauged manually or automatically), TOV, and free-water measurements, all to the nearest ½ inch;

(f) Unique identifying number of each seal removed;

(g) Closing gauge (gauged manually or automatically) and TOV measurement to the nearest ½ inch; and

(h) Unique identifying number of each seal installed.

§ 3173.7 Hot oiling, clean-up, and completion operations.

(a) During hot oil, clean-up, or completion operations, or any other situation where the operator removes oil from storage, temporarily uses it for operational purposes, and then returns it to storage on the same lease, unit PA, or communitized area, the operator must document the following information:

(1) Federal or Indian lease, unit PA, or CA number(s);

(2) Tank location by land description;

(3) Unique tank number and nominal capacity;

(4) Date of the opening gauge;

(5) Opening gauge measurement (gauged manually or automatically) to the nearest ½ inch;

(6) Unique identifying number of each seal removed;

(7) Closing gauge measurement (gauged manually or automatically) to the nearest ½ inch;

(8) Unique identifying number of each seal installed;

(9) How the oil was used; and

(10) Where the oil was used (i.e., well or facility name and number).

(b) During hot oiling, line flushing, or completion operations or any other situation where the operator removes production from storage for use on a different lease, unit PA, or communtized area, the production is considered sold and must be measured in accordance with the applicable requirements of this subpart and reported as sold to ONRR on the OGOR under 30 CFR part 1210 subpart C for the period covering the production in question.

§ 3173.8 Report of theft or mishandling of production.

(a) No later than the next business day after discovery of an incident of apparent theft or mishandling of production, the operator, purchaser, or transporter must report the incident to the AO. All oral reports must be followed up with a written incident report within 10 business days of the oral report.

(b) The incident report must include the following information:

(1) Company name and name of the person reporting the incident;

(2) Lease, unit PA, or CA number, well or facility name and number, and FMP number, as appropriate;

(3) Land description of the facility location where the incident occurred;

(4) The estimated volume of production removed;

(5) The manner in which access was obtained to the production or how the mishandling occurred;

(6) The name of the person who discovered the incident;

(7) The date and time of the discovery of the incident; and

(8) Whether the incident was reported to local law enforcement agencies and/or company security.

§ 3173.9 Required recordkeeping for inventory and seal records.

(a) The operator must perform an end-of-month inventory (gauged manually or automatically) that records: TOV in storage (measured to the nearest ½ inch) subtracting free water, the volume not corrected for temperature/S&W, and the volume as reported to ONRR on the OGOR;

(1) The end-of-month inventory must be completed within +/- 3 days of the last day of the calendar month; or

(2) The end of month inventory must be a calculated "end of month" inventory based on daily production that takes place between two measured inventories that are not more than 31, nor fewer than 20, days apart. The calculated monthly inventory is determined based on the following equation:

$$\{[(X + Y - W) / Z1] * Z2\} + X = A,$$

where:

A = calculated end of month inventory;

W = first inventory measurement;

X = second inventory measurement;

Y = gross sales volume between the first and second inventory;

Z1 = number of actual days produced between the first and second inventory; and

Z2 = number of actual days produced between the second inventory and end of calendar month for which the OGOR report is due.

For example: If the first inventory measurement performed on January 12 is 125 bbl, the second inventory measurement performed on February 10 is 150 bbl, the gross sales volume between the first and second inventory is 198 bbl, and February is the calendar month for which the report is due. For purposes of this example, we assume February had 28 days and that the well was non-producing for two of those days.

{[(150 bbl + 198 bbl – 125 bbl) / 29 days] * 16 days} + 150 bbl = 273 bbl for the February end-of-month inventory.

(b) For each seal, the operator must maintain a record that includes:

(1) The unique identifying number of each seal and the valve or meter component on which the seal is or was used;

(2) The date of installation or removal of each seal;

(3) For valves, the position (open or closed) in which it was sealed; and

(4) The reason the seal was removed.

§ 3173.10 Form 3160–5, Sundry Notices and Reports on Wells.

(a) The operator must submit a Form 3160-5, Sundry Notices and Reports on Wells (Sundry Notice) for the following:

(1) Site facility diagrams (see § 3173.11 of this subpart);

(2) Request for an FMP number (see § 3173.12 of this subpart);

(3) Request for FMP amendments (see § 3173.13(b) of this subpart);

(4) Requests for approval of off-lease measurement (see § 3173.23 of this subpart);

(5) Request to amend an approval of off-lease measurement (see § 3173.23(k) of this subpart);

(6) Requests for approval of CAAs (see § 3173.15 of this subpart); and

(7) Request to modify a CAA (see § 3173.18 of this subpart).

(b) The operator must submit all Sundry Notices electronically to the BLM office having jurisdiction over the lease, unit, or CA using WIS, unless the submitter:

(1) Is a small business, as defined by the U.S. Small Business Administration; and

(2) Does not have access to the Internet.

§ 3173.11 Site facility diagram.

(a) A site facility diagram is required for all facilities.

(b) Except for the requirement to submit a Form 3160-5, Sundry Notice, with the site facility diagram, no format is prescribed for site facility diagrams. The diagram should be formatted to fit on an 8½ x 11 sheet of paper, if possible, and must be legible and comprehensible to an individual with an ordinary working knowledge of oil field operations (see Appendix A to subpart 3173). If more than one page is required, each page must be numbered (in the format "N of X pages").

(c) The diagram must:

(1) Reflect the position of the production and water recovery equipment, piping for oil, gas, and water, and metering or other measuring systems in relation to each other, but need not be to scale;

(2) Commencing with the header, identify all of the equipment, including, but not limited to, the header, wellhead, piping, tanks, and metering systems located on the site,

and include the appropriate valves and any other equipment used in the handling, conditioning, or disposal of production and water, and indicate the direction of flow;

(3) Identify by API number the wells flowing into headers;

(4) If another operator operates a co-located facility, depict the co-located facility(ies) on the diagram or list them as an attachment and identify them by company name, facility name(s), lease, unit PA, or CA number(s), and FMP number(s);

(5) Indicate which valve(s) must be sealed and in what position during the production and sales phases and during the conduct of other production activities (e.g., circulating tanks or drawing off water), which may be shown by an attachment, if necessary;

(6) When describing co-located facilities operated by one operator, include a skeleton diagram of the co-located facility(ies), showing equipment only. For storage facilities common to co-located facilities operated by one operator, one diagram is sufficient;

(7) Clearly identify the lease, unit PA, or CA to which the diagram applies, the land description of the facility, and the name of the company submitting the diagram, with co-located facilities being identified for each lease, unit PA, or CA;

(8) Clearly identify, on the diagram or as an attachment, all meters and measurement equipment. Specifically identify all approved and assigned FMPs; and

(9) If the operator claims royalty-free use, clearly identify the equipment for which the operator claims royalty-free use. The operator must either:

(i) For each engine, motor, or major component (e.g., compressor, separator, dehydrator, heater-treater, or tank heater) powered by production from the lease, unit PA, or CA, state the volume (oil or gas) consumed (per day or per month) and how the volume is determined; or

(ii) Measure the volume used, by meter or tank gauge.

(d) At facilities for which the BLM will assign an FMP number under § 3173.12, the operator must submit a new site facility diagram as follows:

(1) For facilities that become operational after [INSERT THE EFFECTIVE DATE OF THE FINAL RULE], within 30 days after the BLM assigns an FMP; or

(2) For a facility that is in service on or before [INSERT THE EFFECTIVE DATE OF THE FINAL RULE], and that has a site facility diagram on file with the BLM that meets the minimum requirements of Onshore Oil and Gas Order 3, Site Security, an amended site facility diagram meeting the requirements of this section is not due until 30 days after the existing facility is modified, a non-Federal facility located on a Federal lease or federally approved unit or communitized area is constructed or modified, or there is a change in operator.

(e) At facilities for which an FMP number is not required under § 3173.12 (e.g., facilities that dispose of produced water), the operator must submit a new site facility diagram as follows:

(1) For new facilities in service after [INSERT THE EFFECTIVE DATE OF THE FINAL RULE], the new site facility diagram must be submitted within 30 days after the facility becomes operational; or

(2) For a facility that is in service on or before [INSERT THE EFFECTIVE DATE OF THE FINAL RULE], and that has a site facility diagram on file with the BLM that meets the minimum requirements of Onshore Oil and Gas Order 3, Site Security, an amended site facility diagram meeting the requirements of this section is not due until 30 days after the existing facility is modified, a non-Federal facility located on a Federal lease or

federally approved unit or communitized area is constructed or modified, or there is a change in operator.

(f) After a site facility diagram has been submitted that complies with the requirements of this part, the operator has an ongoing obligation to update and amend the diagram within 30 days after such facility is modified, a non-Federal facility located on a Federal lease or federally approved unit or communitized area is constructed or modified, or there is a change in operator.

§ 3173.12 Applying for a facility measurement point.

(a)(1) Unless otherwise approved, the FMP(s) for all Federal and Indian leases, unit PAs, or CAs must be located within the boundaries of the lease, unit, or communitized area from which the production originated and must measure only production from that lease, unit PA, or CA.

(2) Off-lease measurement or commingling and allocation of Federal or Indian production requires prior approval (see 43 CFR 3162.7-2, 3162.7-3, 3173.15, 3173.16, 3173.24, and 3173.25).

(b) The BLM will not approve as an FMP a gas processing plant tailgate meter located off the lease, unit, or communitized area.

(c) The operator must submit separate applications for approval of an FMP that measures oil produced from a lease, unit PA, or CA, or under a CAA that complies with the requirements of this subpart, and an FMP that measures gas produced from the same lease, unit PA, or CA, or under a CAA that complies with the requirements of this subpart. This requirement applies even if the measurement equipment or facilities are at the same location.

(d) For a permanent measurement facility that comes into service after [INSERT THE EFFECTIVE DATE OF THE FINAL RULE], the operator must apply for approval of the FMP before any production leaves the permanent measurement facility. This requirement does not apply to temporary measurement equipment used during well testing operations. After timely submission and prior to approval of an FMP request, an operator must use the lease, unit PA, or CA number for reporting production to ONRR, until the BLM assigns an FMP number, at which point the operator must use the FMP number for all reporting to ONRR as set forth in § 3173.13 of this subpart.

(e) For a permanent measurement facility in service on or before [INSERT THE EFFECTIVE DATE OF THE FINAL RULE], the operator must apply for BLM approval of an FMP within the time prescribed in this paragraph, based on the production level of any one of the leases, unit PAs, or CAs, whether or not they are part of a CAA. The deadline to apply for an FMP approval applies to both oil and gas measurement facilities measuring production from that lease, unit PA, or CA.

(1) For a stand-alone lease, unit PA, or CA that produced 10,000 Mcf or more of gas per month or 100 bbl or more of oil per month, by [INSERT DATE ONE YEAR AFTER THE EFFECTIVE DATE OF THE FINAL RULE].

(2) For a stand-alone lease, unit PA, or CA that produced 1,500 Mcf or more, but less than 10,000 Mcf of gas per month, or 10 bbl or more, but less than 100 bbl of oil per month, by [INSERT DATE TWO YEARS AFTER THE EFFECTIVE DATE OF THE FINAL RULE].

(3) For a stand-alone lease, unit PA, or CA that produced less than 1,500 Mcf of gas per month or less than 10 bbl of oil per month, [INSERT DATE THREE YEARS AFTER THE EFFECTIVE DATE OF THE FINAL RULE].

(4) For a stand-alone lease, unit PA, or CA that has not produced for a year or more before [INSERT THE EFFECTIVE DATE OF THE FINAL RULE], the operator must apply for an FMP prior to the resumption of production.

(5) The production levels identified in paragraphs (e)(1) through (e)(3) of this section should be calculated using the average production of oil or gas over the 12 months preceding the effective date of this section or over the period the lease, unit PA, or CA has been in production, whichever is shorter.

(6) If the operator of any facility covered by this section applies for an FMP approval by the deadline in this paragraph, the operator may continue using the lease, unit PA, or CA number for reporting production to ONRR, until the BLM's assigns an FMP number, at which point the operator must use the FMP number for all reporting to ONRR as set forth in § 3173.13 of this subpart.

(7) If the operator fails to apply for an FMP approval by the deadline in this paragraph, the operator will be subject to an INC and may also be subject to an assessment of a civil penalty under 43 CFR subpart 3163, together with any other remedy available under applicable law or regulation.

(f) All requests for FMP approval must include the following:

(1) A complete Sundry Notice requesting approval of each FMP;

(2) The applicable Measurement Type Code specified in WIS;

(3) Information about the equipment used for oil and gas measurement, including, for:

(i) “Gas measurement,” specify operator/purchaser/transporter unique station number, primary element (meter tube) size or serial number, and type of secondary device (mechanical or electronic);

(ii) “Oil measurement by tank gauge,” specify oil tank number or tank serial number and size in barrels or gallons for all tanks associated with measurement at an FMP; and

(iii) “Oil measurement by LACT or CMS,” specify whether the equipment is LACT or CMS and the associated oil tank number or tank serial number and size in barrels or gallons (there may be more than one tank associated with an FMP);

(4) Where production from more than one well will flow to the requested FMP, list the API well numbers associated with the FMP; and

(5) FMP location by land description.

(g) Request for approval of an FMP may be submitted concurrently with separate requests for off-lease measurement and/or CAA.

§ 3173.13 Requirements for approved facility measurement points.

(a) For an existing facility in service on or before [INSERT THE EFFECTIVE DATE OF THE FINAL RULE], an operator must start using an FMP number for reporting production to ONRR on its OGOR for the fourth production month after the BLM assigns the FMP number(s), and every month thereafter. (For example, for a facility that is assigned an FMP number on January 15, 2016, the effective date of the FMP is the May production report.) For a new facility in service after [INSERT THE EFFECTIVE DATE OF THE FINAL RULE], an operator must start using an FMP number for reporting production to ONRR on its OGOR for the first production month after the BLM assigns the FMP number(s), and every month thereafter. (For example, for a facility that

is assigned an FMP number on January 15, 2016, the effective date of the FMP is the February production report.)

(b)(1) The operator must file a Sundry Notice that describes any changes or modifications made to the FMP within 30 days after the change. This requirement does not apply to temporary modifications (e.g., for maintenance purposes). These include any changes and modifications to the information listed on an application submitted under § 3173.12 of this subpart.

(2) The description must include details such as the primary element, secondary element, LACT/CMS meter, tank number(s), and wells or facilities using the FMP.

(3) The Sundry Notice must specify what was changed and the effective date, and include, if appropriate, an amended site facility diagram (see § 3173.11 of this subpart).

§ 3173.14 Conditions for commingling and allocation approval (surface and downhole).

(a) Subject to the exceptions provided in paragraph (b) of this section, the BLM may grant a CAA only if the proposed allocation method used for any such commingled measurement does not have the potential to affect the determination of the total volume or quality of production on which royalty owed is determined for all the Federal or Indian leases, unit PAs, or CAs which are proposed for commingling, and only if the following criteria are met:

(1) The proposed commingling includes production from more than one:

(i) Federal lease, unit PA, or CA, where each lease, unit PA, or CA proposed for commingling has 100 percent Federal mineral interest, the same fixed royalty rate and, and the same revenue distribution;

(ii) Indian tribal lease, unit PA, or CA, where each lease, unit PA, or CA proposed for commingling is wholly owned by the same tribe and has the same fixed royalty rate;

(iii) Federal unit PA or CA where each unit PA or CA proposed for commingling has the same proportion of Federal interest, and which interest is subject to the same fixed royalty rate and revenue distribution. (For example, the BLM could approve a commingling request under this paragraph where an operator proposes to commingle two Federal CAs of mixed ownership and both CAs are 50 percent Federal/50 percent private, so long as the Federal interests have the same royalty rates and royalty distributions.); or

(iv) Indian unit PA or CA where each unit PA or CA proposed for commingling has the same proportion of Indian interests, and which interest is held by the same tribe and has the same fixed royalty rate; and

(2) The operator or operators provide a methodology acceptable to BLM for allocation among the properties from which production is to be commingled (including a method for allocating produced water), with a signed agreement if there is more than one operator;

(3) For each of the leases, unit PAs, or CAs proposed for inclusion in the CAA, the applicant demonstrates to the AO that a lease, unit PA, or CA proposed for inclusion is producing in paying quantities (or, in the case of Federal leases, capable of production in paying quantities) pending approval of the CAA; and

(4) The FMP(s) for the proposed CAA measure production originating only from the leases, unit PAs, or CAs in the CAA.

(b) The BLM may also approve a CAA in instances where the proposed commingling of production involves production from Federal or Indian leases, unit PAs, or CAs that do not meet the criteria of subparagraph (a)(1) (e.g., the commingling of leases, unit PAs, or CAs with different royalty rates or different distributions of revenue, or where the commingling involves multiple mineral ownerships). In order to be approved, a CAA under this subparagraph must meet the requirements of paragraphs (a)(2) through (a)(4) of this section and at least one of the following conditions:

(1) The Federal or Indian lease, unit PA, or CA meets the definition of an economically marginal property. However, if the BLM determines that a Federal or Indian lease, unit PA, or CA included in a CAA ceases to be an economically marginal property, then this condition is no longer met;

(2) The average monthly production over the preceding 12 months for each Federal or Indian lease, unit PA, or CA proposed for the CAA on an individual basis is less than 1,000 Mcf of gas per month, or 100 bbl of oil per month;

(3) A CAA that includes Indian leases, unit PAs, or CAs has been authorized under tribal law or otherwise approved by a tribe;

(4) The CAA covers the downhole commingling of production from multiple formations that are covered by separate leases, unit PAs, or CAs, where the BLM has determined that the proposed commingling from those formations is an acceptable practice for the purpose of achieving maximum ultimate economic recovery and resource conservation; or

(5) There are overriding considerations that indicate the BLM should approve a commingling application in the public interest notwithstanding potential negative royalty

impacts from the allocation method. Such considerations could include topographic or other environmental considerations that make non-commingled measurement physically impractical or undesirable, in view of where additional measurement and related equipment necessary to achieve non-commingled measurement would have to be located.

§ 3173.15 Applying for a commingling and allocation approval.

To apply for a CAA, the operator(s) must submit the following, if applicable, to the BLM office having jurisdiction over the leases, unit PAs, or CAs from which production is proposed to be commingled:

(a) A completed Sundry Notice for approval of commingling and allocation (if off-lease measurement is a feature of the commingling and allocation proposal, then a separate Sundry Notice under § 3173.23 is not necessary as long as the information required under § 3173.23 (b) through (e) and, where applicable, § 3173.23 (f) through (i) is included as part of the request for approval of commingling and allocation);

(b) A completed Sundry Notice for approval of off-lease measurement under § 3173.23 of this subpart, if any of the proposed FMPs are outside the boundaries of any of the leases, units, or CAs from which production would be commingled (which may be included in the same Sundry Notice as the request for approval of commingling and allocation), except as provided in paragraph (a) of this section;

(c) A proposed allocation agreement, including an allocation methodology (including allocation of produced water), with an example of how the methodology is applied, signed by each operator of each of the leases, unit PAs, or CAs from which production would be included in the CAA;

(d) A list of all Federal or Indian lease, unit PA, or CA numbers in the proposed CAA, specifying the type of production (i.e., oil, gas, or both) for which commingling is requested;

(e) A topographic map or maps of appropriate scale showing the following:

(1) The boundaries of all the leases, units, unit PAs, or communitized areas whose production is proposed to be commingled; and

(2) The location of existing or planned facilities and the relative location of all wellheads (including the API number) and piping included in the CAA, and existing FMPs or FMPs proposed to be installed to the extent known or anticipated;

(f) A surface use plan of operations (which may be included in the same Sundry Notice as the request for approval of commingling and allocation) if new surface disturbance is proposed for the FMP and its associated facilities are located on BLM-managed land within the boundaries of the lease, units, and communitized areas from which production would be commingled;

(g) A right-of-way grant application (Standard Form 299), filed under 43 CFR part 2880, if the proposed FMP is on a pipeline, or under 43 CFR part 2800, if the proposed FMP is a meter or storage tank. This requirement applies only when new surface disturbance is proposed for the FMP, and its associated facilities are located on BLM-managed land outside any of the leases, units, or communitized areas whose production would be commingled;

(h) Written approval from the appropriate surface-management agency, if new surface disturbance is proposed for the FMP and its associated facilities are located on Federal land managed by an agency other than the BLM;

(i) A right-of-way grant application for the proposed FMP, filed under 25 CFR part 169, with the appropriate BIA office, if any of the proposed surface facilities are on Indian land outside the lease, unit, or communitized area from which the production would be commingled;

(j) Documentation demonstrating that each of the leases, unit PAs, or CAs proposed for inclusion in the CAA is producing in paying quantities (or, in the case of Federal leases, is capable of production in paying quantities) pending approval of the CAA; and

(k) All gas analyses, including Btu content (if the CAA request includes gas) and all oil gravities (if the CAA request includes oil) for previous periods of production from the leases, units, unit PAs, or communitized areas proposed for inclusion in the CAA, up to 6 years before the date of the application for approval of the CAA. Gas analysis and oil gravity data is not needed if the CAA falls under § 3173.14(a)(1).

§ 3173.16 Existing commingling and allocation approvals.

Upon receipt of an operator's request for assignment of an FMP number to a facility associated with a CAA existing on [INSERT THE EFFECTIVE DATE OF THE FINAL RULE], the AO will review the existing CAA and take the following action:

(a) The AO will grandfather the existing CAA and associated off-lease measurement, where applicable, if the existing CAA meets one of the following conditions:

(1) The existing CAA involves downhole commingling that includes Federal or Indian leases, unit PAs, or CAs; or

(2) The existing CAA is for surface commingling and the average production rate over the previous 12 months for each Federal or Indian lease, unit PA, and CA included in the CAA is:

(i) Less than 1,000 Mcf per month for gas; or

(ii) Less than 100 bbl per day for oil.

(b) If the existing CAA does not meet the conditions of paragraphs (a)(1) or (a)(2) of this section, the AO will review the CAA for consistency with the minimum standards and requirements for a CAA under § 3173.14 of this subpart.

(1) The AO will notify the operator in writing of any inconsistencies or deficiencies with an existing CAA. The operator must correct any inconsistencies or deficiencies that the AO identifies, provide the additional information that the AO has requested, or request an extension of time from the AO, within 20 business days after receipt of the AO's notice. When the AO is satisfied that the operator has corrected any inconsistencies or deficiencies, the AO will terminate the existing CAA and grant a new CAA based on the operator's corrections.

(2) The AO may terminate the existing CAA and grant a new CAA with new or amended COAs to make the approval consistent with the requirements under § 3173.14 of this subpart in connection with approving the requested FMP. If the operator appeals any COAs of the new CAA, the existing CAA approval will continue in effect during the pendency of the appeal.

(3) If the existing CAA does not meet the standards and requirements of § 3173.14 of this subpart and the operator does not correct the deficiencies, the AO may terminate the existing CAA under § 3173.20 of this subpart and deny the request for an FMP number for the facility associated with the existing CAA.

(c) If the AO grants a new CAA to replace an existing CAA under paragraph (b) of this section, the new CAA is effective on the first day of the month following its approval.

Any new allocation percentages resulting from the new CAA will apply from the effective date of the CAA forward.

§ 3173.17 Relationship of a commingling and allocation approval to royalty-free use of production.

A CAA does not constitute approval of off-lease royalty-free use of production as fuel in facilities located at an FMP approved under the CAA.

§ 3173.18 Modification of a commingling and allocation approval.

(a) A CAA must be modified when there is:

(1) A modification to the allocation agreement;

(2) Inclusion of additional leases, unit PAs, or CAs are proposed in the CAA; or

(3) Termination of or permanent production cessation from any of the leases, unit PAs, or CAs within the CAA.

(b) To request a modification of a CAA, all operators must submit to the AO:

(1) A completed Sundry Notice describing the modification requested;

(2) A new allocation methodology, including an allocation methodology which includes allocation of produced water and an example of how the methodology is applied, if appropriate; and

(3) Certification by each operator in the CAA that it agrees to the CAA modification.

(c) A change in operator does not trigger the need to modify a CAA.

§ 3173.19 Effective date of a commingling and allocation approval.

(a) If the BLM approves a CAA, the effective date of the CAA is the first day of the month following first production through the FMPs for the CAA.

(b) If the BLM approves a modification, the effective date is the first day of the month following approval of the modification.

(c) A CAA does not modify any of the terms of the leases, units, or CAs covered by the CAA.

§ 3173.20 Terminating a commingling and allocation approval.

(a) The AO may terminate a CAA for any reason, including, but not limited to, the following:

(1) Changes in technology, regulation, or BLM policy;

(2) Operator non-compliance with the terms or COAs of the CAA or this subpart; or

(3) The AO determines that a lease, unit, or CA subject to the CAA has terminated, or a unit PA subject to the CAA has ceased production.

(b) If only one lease, unit PA, or CA remains subject to the CAA, the CAA terminates automatically.

(c) An operator may terminate its participation in a CAA by submitting a Sundry Notice to the BLM. The Sundry Notice must identify the FMP(s) for the lease(s), unit PA(s), or CA(s) previously subject to the CAA. Termination by one operator does not mean the CAA terminates as to all other participating operators, so long as one of the other provisions of this subpart is met and the remaining operators submit a Sundry Notice requesting a new CAA as outlined in paragraph (e) of this section.

(d) The AO will notify in writing all operators who are a party to the CAA of the effective date of the termination and any inconsistencies or deficiencies with their CAA approval that serve as the reason(s) for termination. The operator must correct any inconsistencies or deficiencies that the AO identifies, provide the additional information

that the AO has requested, or request an extension of time from the AO, within 20 business days after receipt of the BLM's notice, or the CAA is terminated.

(e) If a CAA is terminated, each lease, unit PA, or CA that was included in the CAA may require a new FMP number(s) or a new CAA. Operators will have 30 days to apply for a new FMP number (§ 3173.12) or CAA (§ 3173.15), if applicable. The existing FMP number may be used for production reporting until a new FMP number is assigned or CAA is approved.

§ 3173.21 Combining production downhole in certain circumstances.

(a)(1) Combining production from a single well drilled into different hydrocarbon pools or geologic formations (e.g., a directional well) underlying separate adjacent properties (whether Federal, Indian, State, or private), where none of the hydrocarbon pools or geologic formations underlie or are common to more than one of the respective properties, constitutes commingling for purposes of §§ 3173.14 through 3173.20.

(2) If any of the hydrocarbon pools or geologic formations underlie or are common to more than one of the properties, the operator must establish a unit PA (see 43 CFR part 3180) or CA (see 43 CFR 3105.2-1 – 3105.2-3), as applicable, rather than applying for a CAA.

(b) Combining production downhole from different geologic formations on the same lease, unit PA, or CA in a single well requires approval of the AO (see 43 CFR 3162.3-2), but it is not considered commingling for production accounting purposes.

§ 3173.22 Requirements for off-lease measurement.

The BLM will consider granting a request for off-lease measurement if the request:

(a) Involves only production from a single lease, unit PA, CA, or CAA;

(b) Provides for accurate production accountability;

(c) Is in the public interest (considering factors such as BMPs, topographic and environmental conditions that make on-lease measurement physically impractical, and maximum ultimate economic recovery); and

(d) Occurs at an approved FMP. A request for approval of an FMP (see § 3173.12 of this subpart) may be filed concurrently with the request for off-lease measurement.

§ 3173.23 Applying for off-lease measurement.

To apply for approval of off-lease measurement, the operator must submit the following to the BLM office having jurisdiction over the leases, units, or communitized areas:

(a) A completed Sundry Notice;

(b) Justification for off-lease measurement (considering factors such as BMPs, topographic and environmental issues, and maximum ultimate economic recovery);

(c) A topographic map or maps of appropriate scale showing the following:

(1) The boundary of the lease, unit, unit PA, or communitized area from which the production originates; and

(2) The location of existing or planned facilities and the relative location of all wellheads (including the API number for each well) and piping included in the off-lease measurement proposal, and existing FMPs or FMPs proposed to be installed to the extent known or anticipated;

(d) The surface ownership of all land on which equipment is, or is proposed to be, located;

(e) If any of the proposed off-lease measurement facilities are located on non-federally owned surface, a written concurrence signed by the owner(s) of the surface and the owner(s) of the measurement facilities, including each owner's name, address, and telephone number, granting the BLM unrestricted access to the off-lease measurement facility and the surface on which it is located, for the purpose of inspecting any production, measurement, water handling, or transportation equipment located on the non-Federal surface up to and including the FMP, and for otherwise verifying production accountability. If the ownership of the non-Federal surface or of the measurement facility changes, the operator must obtain and provide to the AO the written concurrence required under this paragraph from the new owner(s) within 30 days of the change in ownership;

(f) A right-of-way grant application (Standard Form 299), filed under 43 CFR part 2880, if the proposed off-lease FMP is on a pipeline, or under 43 CFR part 2800, if the proposed off-lease FMP is a meter or storage tank. This requirement applies only when new surface disturbance is proposed for the FMP and its associated facilities are located on BLM-managed land;

(g) A right-of-way grant application, filed under 25 CFR part 169 with the appropriate BIA office, if any of the proposed surface facilities are on Indian land outside the lease, unit, or communitized area from which the production originated;

(h) Written approval from the appropriate surface-management agency, if new surface disturbance is proposed for the FMP and its associated facilities are located on Federal land managed by an agency other than the BLM;

(i) An application for approval of off-lease royalty-free use (if required under applicable rules), if the operator proposes to use production from the lease, unit, or CA as fuel at the off-lease measurement facility without payment of royalty;

(j) A statement that indicates whether the proposal includes all, or only a portion of, the production from the lease, unit, or CA. (For example, gas, but not oil, could be proposed for off-lease measurement.) If the proposal includes only a portion of the production, identify the FMP(s) where the remainder of the production from the lease, unit, or CA is measured or is proposed to be measured; and

(k) If the operator is applying for an amendment of an existing approval of off-lease measurement, the operator must submit a completed Sundry Notice required under paragraph (a) of this section, and information required under paragraphs (b) through (j) of this section to the extent the information previously submitted has changed.

§ 3173.24 Effective date of an off-lease measurement approval.

If the BLM approves off-lease measurement, the approval is effective on the date that the approval is issued, unless the approval specifies a different effective date.

§ 3173.25 Existing approved off-lease measurement.

(a) Upon receipt of an operator's request for assignment of an FMP number to a facility associated with an off-lease measurement approval existing on [INSERT THE EFFECTIVE DATE OF THE FINAL RULE], the AO will review the existing approved off-lease measurement for consistency with the minimum standards and requirements for an off-lease measurement approval under § 3173.22 of this subpart. The AO will notify the operator in writing of any inconsistencies or deficiencies.

(b) The operator must correct any inconsistencies or deficiencies that the AO identifies, provide any additional information the AO requests, or request an extension of time from the AO, within 20 business days after receipt of the AO's notice. The extension request must explain the factors that will prevent the operator from complying within 20 days and provide a timeframe under which the operator can comply.

(c) The AO may terminate the existing off-lease measurement approval and grant a new off-lease measurement approval with new or amended COAs to make the approval consistent with the requirements for off-lease measurement under § 3173.22 of this subpart in connection with approving the requested FMP. If the operator appeals the new off-lease measurement approval, the existing off-lease measurement approval will continue in effect during the pendency of the appeal.

(d) If the existing off-lease measurement approval does not meet the standards and requirements of § 3173.22 of this subpart and the operator does not correct the deficiencies, the AO may terminate the existing off-lease measurement approval under § 3173.27 of this subpart and deny the request for an FMP number for the facility associated with the existing off-lease measurement approval.

(e) If the existing off-lease measurement approval under this section is consistent with the requirements under § 3173.22, then that existing off-lease measurement is grandfathered and will be part of its FMP approval.

(f) If the BLM grants a new off-lease measurement approval to replace an existing off-lease measurement approval, the new approval is effective on the first day of the month following its approval.

§ 3173.26 Relationship of off-lease measurement approval to royalty-free use of production.

Approval of off-lease measurement does not constitute approval of off-lease royalty-free use of production as fuel in facilities located at an FMP approved under the off-lease measurement approval.

§ 3173.27 Termination of off-lease measurement approval.

(a) The BLM may terminate off-lease measurement approval for any reason, including, but not limited to, the following:

(1) Changes in technology, regulation, or BLM policy; or

(2) Operator non-compliance with the terms or conditions of approval of the off-lease measurement approval or §§ 3173.22 through 3173.26 of this subpart.

(b) The BLM will notify the operator in writing of the effective date of the termination and any inconsistencies or deficiencies with its off-lease measurement approval that serve as the reason(s) for termination. The operator must correct any inconsistencies or deficiencies that the BLM identifies, provide any additional information the AO requests, or request an extension of time from the AO within 20 business days after receipt of the BLM's notice, or the off lease measurement approval terminates on the effective date.

(c) The operator may terminate the off-lease measurement by submitting a Sundry Notice to the BLM. The Sundry Notice must identify the new FMP(s) for the lease(s), unit(s), or CA(s) previously subject to the off-lease measurement approval.

(d) If off-lease measurement is terminated, each lease, unit PA, or CA that was subject to the off-lease measurement approval may require a new FMP number(s) or a new off-lease measurement approval. Operators will have 30 days to apply for a new FMP

number or off-lease measurement approval, whichever is applicable. The existing FMP number may be used for production reporting until a new FMP number is assigned or off-lease measurement is approved.

§ 3173.28 Instances not constituting off-lease measurement, for which no approval is required.

(a) If the approved FMP is located on the well pad of a directionally or horizontally drilled well that produces oil and gas from a lease, unit, or communitized area on which the well pad is not located, measurement at the FMP does not constitute off-lease measurement. However, if the FMP is located off of the well pad, regardless of distance, measurement at the FMP constitutes off-lease measurement, and BLM approval is required under §§ 3173.22 through 3173.26 of this subpart.

(b) If a lease, unit, or CA consists of more than one separate tract whose boundaries are not contiguous (e.g., a single lease comprises two or more separate tracts), measurement of production at an FMP located on one of the tracts is not considered to be off-lease measurement if:

(1) The production is moved from one tract within the same lease, unit, or communitized area to another area of the lease, unit, or communitized area on which the FMP is located; and

(2) Production is not diverted during the movement between the tracts before the FMP, except for production used royalty free.

§ 3173.29 Immediate assessments for certain violations.

Certain instances of noncompliance warrant the imposition of immediate assessments upon discovery, as prescribed in the following table. Imposition of these assessments does not preclude other appropriate enforcement actions:

Table 1 to § 3173.29: Violations Subject to an Immediate Assessment

Violations Subject to an Immediate Assessment	
Violation:	Assessment amount per violation:
1. An appropriate valve on an oil storage tank was not sealed, as required by § 3173.2 of this subpart.	$1,000
2. An appropriate valve or component on an oil metering system was not sealed, as required by § 3173.3 of this subpart.	$1,000
3. A Federal seal is removed without prior approval of the AO or AR, as required by § 3173.4 of this subpart.	$1,000
4. Oil was not properly measured before removal from storage for use on a different lease, unit, or CA, as required by § 3173.7(b) of this subpart.	$1,000
5. An FMP was bypassed, in violation of § 3170.4 of this part.	$1,000
6. Theft or mishandling of production was not reported to the BLM, as required by § 3173.8 of this subpart.	$1,000
7. Records necessary to determine quantity and quality of production were not retained, as required by § 3170.7 of this subpart	$1,000

8. FMP application was not submitted, as required by § 3173.12 of this subpart.	$1,000
9. (i) For facilities that begin operation after [INSERT THE EFFECTIVE DATE OF THE FINAL RULE], BLM approval for off-lease measurement was not obtained before removing production, as required by § 3173.23 of this subpart. (ii) Facilities that were in operation on or before [INSERT THE EFFECTIVE DATE OF THE FINAL RULE], are subject to an assessment if they do not have an existing BLM approval for off-lease measurement.	$1,000
10. (i) For facilities that begin operation after [INSERT THE EFFECTIVE DATE OF THE FINAL RULE], BLM approval for surface commingling was not obtained before removing production, as required by § 3173.15 of this subpart. (ii) Facilities that were in operation on or before [INSERT THE EFFECTIVE DATE OF THE FINAL RULE], are subject to an assessment if they do not have an existing BLM approval for surface commingling.	$1,000
11. (i) For facilities that begin operation after [INSERT THE EFFECTIVE DATE OF THE FINAL RULE], BLM approval for downhole commingling was not obtained before removing production, as required by § 3173.15 of this subpart. (ii) Facilities that were in operation on or before	$1,000

[INSERT THE EFFECTIVE DATE OF THE FINAL RULE], are subject to an assessment if they do not have an existing BLM approval for downhole commingling.	

APPENDIX A

APPENDIX A

I. ***Diagrams***

1. Site Facility Diagrams and Sealing of Valve Introduction
2. Diagrams

Diagrams	Description
I-A	Gas well without separation equipment
I-B	Gas well with separation equipment
I-C	Single operator with co-located facilities single oil tank, gas, and water storage
I-D	Oil sales with multiple oil tanks, gas, and water storage
I-E	Co-located facilities with multiple operators, oil sales by liquid meter (Lease Automatic Custody Transfer or Coriolis Measurement System), gas, and water storage
I-F	On-lease gas plant, with oil sales by liquid meter, Liquefied Petroleum Gas (LPG)/Natural Gas Liquids (NGL) sales by liquid meter, inlet gas, tailgate gas, flared or vented and plant process gas used.
I-G	Enhanced recovery water injection or other water disposal facility.
I-H	Pod Facility
I-I	On-lease with gas measurement after the Joule–Thomson Plant (JT-Skid), oil sales by liquid meter, Liquefied Petroleum Gas (LPG)/Natural Gas Liquids (NGL) sales by liquid meter.
I-J	On-lease with gas measurement before the Joule–Thomson Plant (JT-Skid) and oil sales by liquid meter. **Note: No FMP number required for Liquefied Petroleum Gas (LPG)/Natural Gas Liquids (NGL) liquid meter.**

1. ***Site Facility Diagrams*** *and* ***Sealing of Valves Introduction***

Introduction

Appendix A is provided not as a requirement but solely as an example to aid operators, purchasers and transporters in determining what valves are considered "appropriate valves" subject to the seal requirements of this rule, and to aid in the preparation of facility diagrams. It is impossible to include every type of equipment that could be used or situation that could occur in production activities. In making the determination of what is an "appropriate valve," the entire facility must be considered as a whole, including the facility size, the equipment type, and the on-going activities at the facility.

Facility Operator/Owner Name: ABC Oil and Gas Federal/Indian Lease, unit PA, or CA Number: NMNM12345

Land Description: As defined in § 3170.3 Page 1 of 1

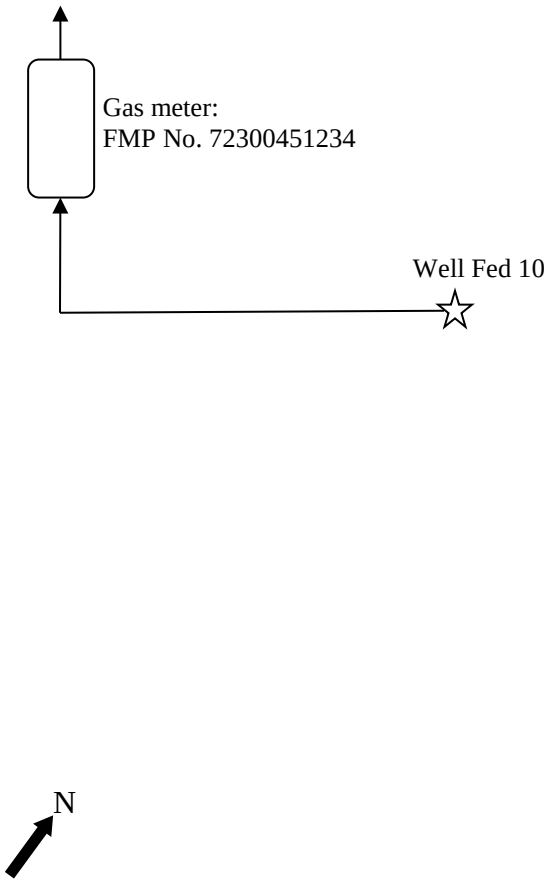

Facility Operator/Owner Name: ABC Oil and Gas
Federal/Indian Lease, unit PA, or CA Number: NMNM12345
Land Description: As defined in § 3170.3
Page 1 of 1

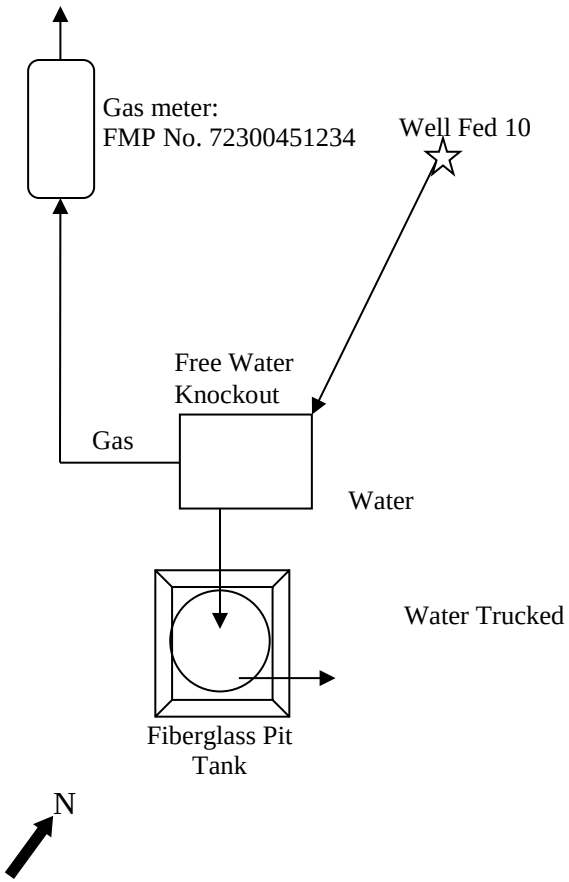

Free Water Knockout
Gas Usage 0.1 Mcf/day X days produced = Mcf per month.

I-C

Facility Operator/Owner Name: ABC Oil and Gas

Federal/Indian Lease, unit PA, or CA Number: NMNM12345 and NMNM54321

Land Description: As defined in § 3170.3

Page 1 of 3

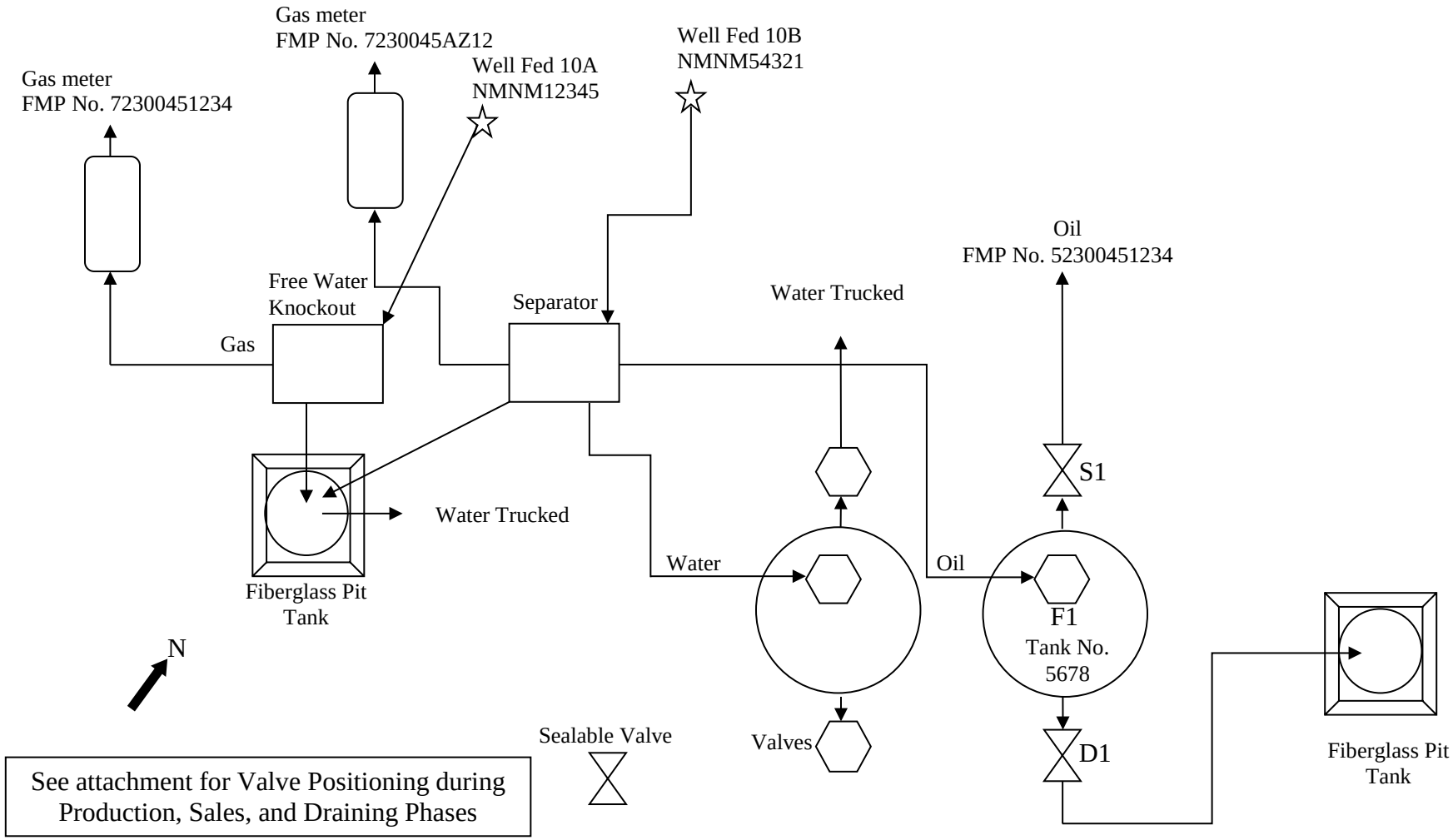

Facility Operator/Owner Name: ABC Oil and Gas
Federal/Indian Lease, unit PA, or CA Number: NMNM12345
Land Description: As defined in § 3170.3

Diagram #I-C:
F1 is the Fill Valve
S1 is the Sales Valve
D1 is the Drain Valve

Valve Positioning in the Production Phase
Production into T5678
S1 is Sealed Closed
F1 is Open
D1 is Sealed Closed

Valve Positioning in the Sales Phase
Sales from T5678
S1 is Open
F1 is Open
D1 is Sealed Closed

Valve Positioning in the Drain Phase
Draining from T5678
S1 is Sealed Closed
F1 is Open
D1 is Open

Free Water Knockout
Gas Usage 0.1 Mcf/day X days produced = Mcf per month.

Facility Operator/Owner Name: ABC Oil and Gas Federal/Indian Lease, unit PA, or CA Number: NMNM12345
Land Description: As defined in § 3170.3

Separator
Fire box rated at 150,000 btu/hour (btu/hr) operated, 20 hours/day (hrs/day)
150,000 btu/hr ÷ 1157 btu/cubic foot (btu/ft^3) X 20 hrs/d ÷ 1000 = 2.51 Mcf/day

Pump Jack
Manufacturer fuel use when operated at 75% of rated maximum RPM, 5.87 Mcf/hr X hours operating 12 hrs. = 70.44 Mcf/day

Water Tank
Tank Heater rated at 200,000 btu/hr operated 4 mo/yr (November, December, January, February), 10 hrs/week,
200,000 btu/hr ÷ 1157 btu/ft^3 X 40 hrs/mo ÷ 1000 = 6.91 MCF/mo.

Oil Tank
Tank No.: 5678
Tank Heater rated at 200,000 btu/hr operated 4 mo/yr (November, December, January, February), 5 hrs/week
200,000 btu/hr ÷ 1157 btu/ft^3 X 20 hrs/mo ÷ 1,000 = 3.46 Mcf/mo.

1157 btu/ft^3 as dry determined by gas analysis taken at FMP No. 7230045AZ12 on MM/DD/YYY

Facility Operator/Owner Name: ABC Oil and Gas Federal/Indian Lease, unit PA, or CA Number: NMNM12345
Land Description: As defined in § 3170.3 Page 1 of 3

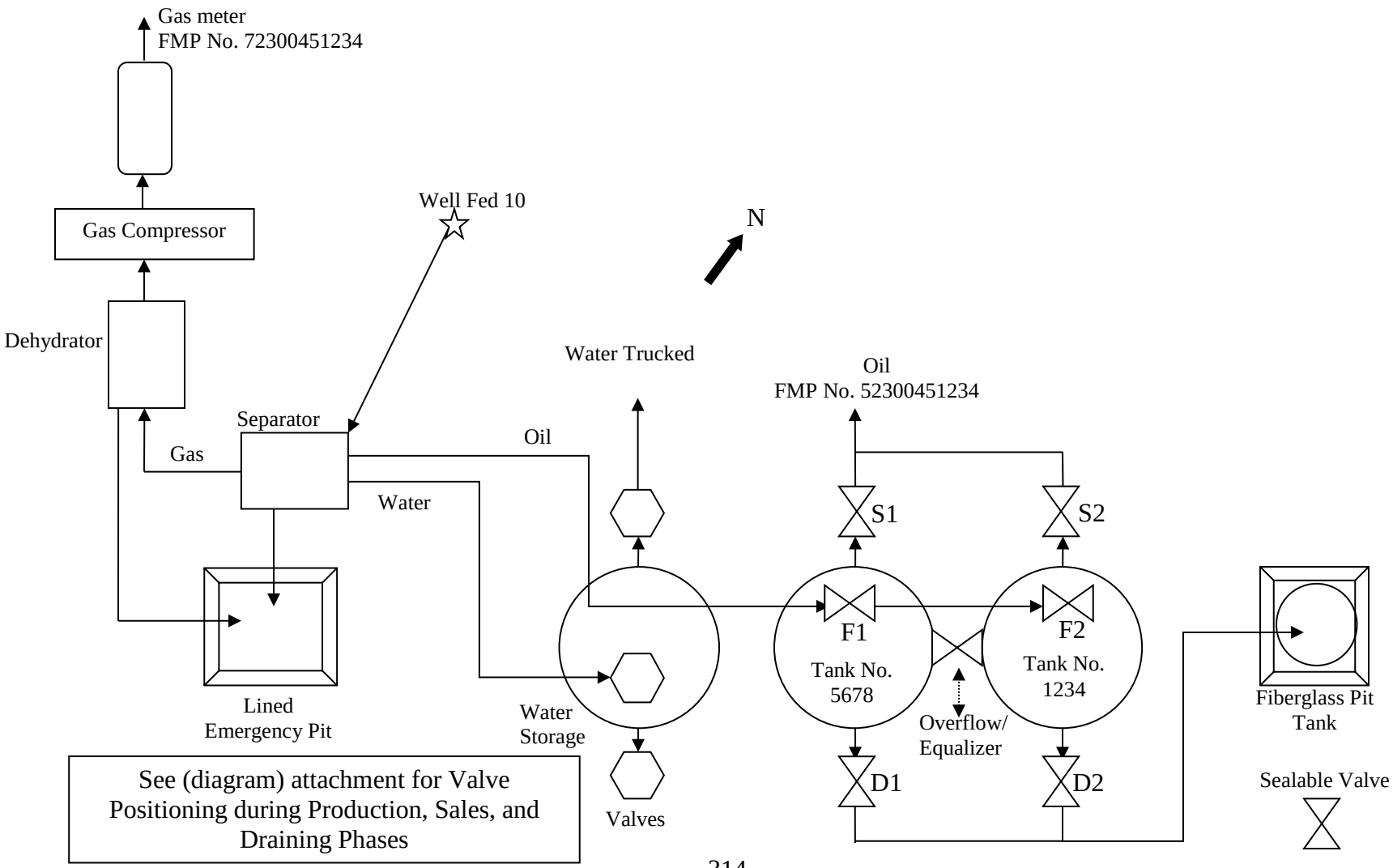

Facility Operator/Owner Name: ABC Oil and Gas
Federal/Indian Lease, unit PA, or CA Number: NMNM12345
Land Description: As defined in § 3170.3

Diagram #I-D:
F1 and F2 are Fill Valves
S1 and S2 and Sales Valves
D1 and D2 are Drain Valves

Valve Positioning in the Production Phase

Production into T5678	Production into T1234
S1 and D1 are Sealed Closed	S2 and D2 are Sealed Closed
Overflow/Equalizer is Open	Overflow/Equalizer is Open
F1 is open and F2 is Closed	F2 is Open and F1 is Closed

Valve Positioning in the Sales Phase

Sales from T5678 through S1:	Sales from T1234 through S2:
D1 and F1 are Sealed Closed	D2 and F2 are Sealed Closed
Overflow/Equalizer is Sealed Closed	Overflow/Equalizer is Sealed Closed
S1 is Open	S2 is Open
S2 Sealed closed	S1 sealed closed
F2 open	F1 open
D2 open or closed	D1 open or closed

Valve Positioning in the Drain Phase

Draining from T5678	Draining from T1234
S1 and F1 are Sealed Closed	S2 and F2 are Sealed Closed
Overflow/Equalizer is Sealed Closed	Overflow/Equalizer is Sealed Closed
D1 is Open	D2 is Open
S-2 sealed close	S1 sealed close
F2 open	F1 open
D2 open or closed	D1 open or closed

Facility Operator/Owner Name: ABC Oil and Gas Federal/Indian Lease, unit PA, or CA Number: NMNM12345
Land Description: As defined in § 3170.3

Compressor
Manufacturer fuel use when operated at 80% of rated maximum, 24.87 Mcf/hr X 24 hrs. = 596.88 Mcf/day

Dehydrator
Fire box rated at 75,000 btu/hr operated, 20 hrs/day
75,000 btu/hr ÷ 1,157 btu/ft^3 X 20 hrs/day 4 ÷ 1,000 = 1.30 Mcf/day

Separator
Fire box rated at 150,000 btu/hr operated 4 mo/yr, 20 hrs/day
150,000 btu/hr ÷ 1,157 btu/ft^3 X 20 hrs/day ÷1,000 = 2.59 Mcf/day

Water Tank
Tank Heater rated at 200,000 btu/hr operated 4 mo/yr, 10 hrs/week, 70% efficiency
200,000 btu/hr ÷ 1,157 btu/ft^3 X 40 hrs/mo ÷ 1,000 = 6.91 Mcf/mo.

Oil Tank No.: 5678
Tank Heater rated at 200,000 btu/hr operated 4 mo/yr, 5 hrs/week
200,000 btu/hr ÷ 1,157 btu/ft^3 X 20 hrs/mo ÷ 1,000 = 3.46 Mcf/mo.

Oil Tank No.: 1234
Tank Heater rated at 200,000 btu/hr operated 4 mo/yr, 5 hrs/week
200,000 btu/hr ÷ 1,157 btu/ft^3 (see current gas analysis) X 20 hrs/mo ÷ 1,000 = 3.46 Mcf/mo.

1157 btu/ft^3 as dry determined by gas analysis taken at FMP No. 72300451234 on MM/DD/YYY

Facility Operator/Owner Name: ABC Oil and Gas
Federal/Indian Lease, unit PA, or CA Number: NMNM12345
Land Description: As defined in § 3170.3

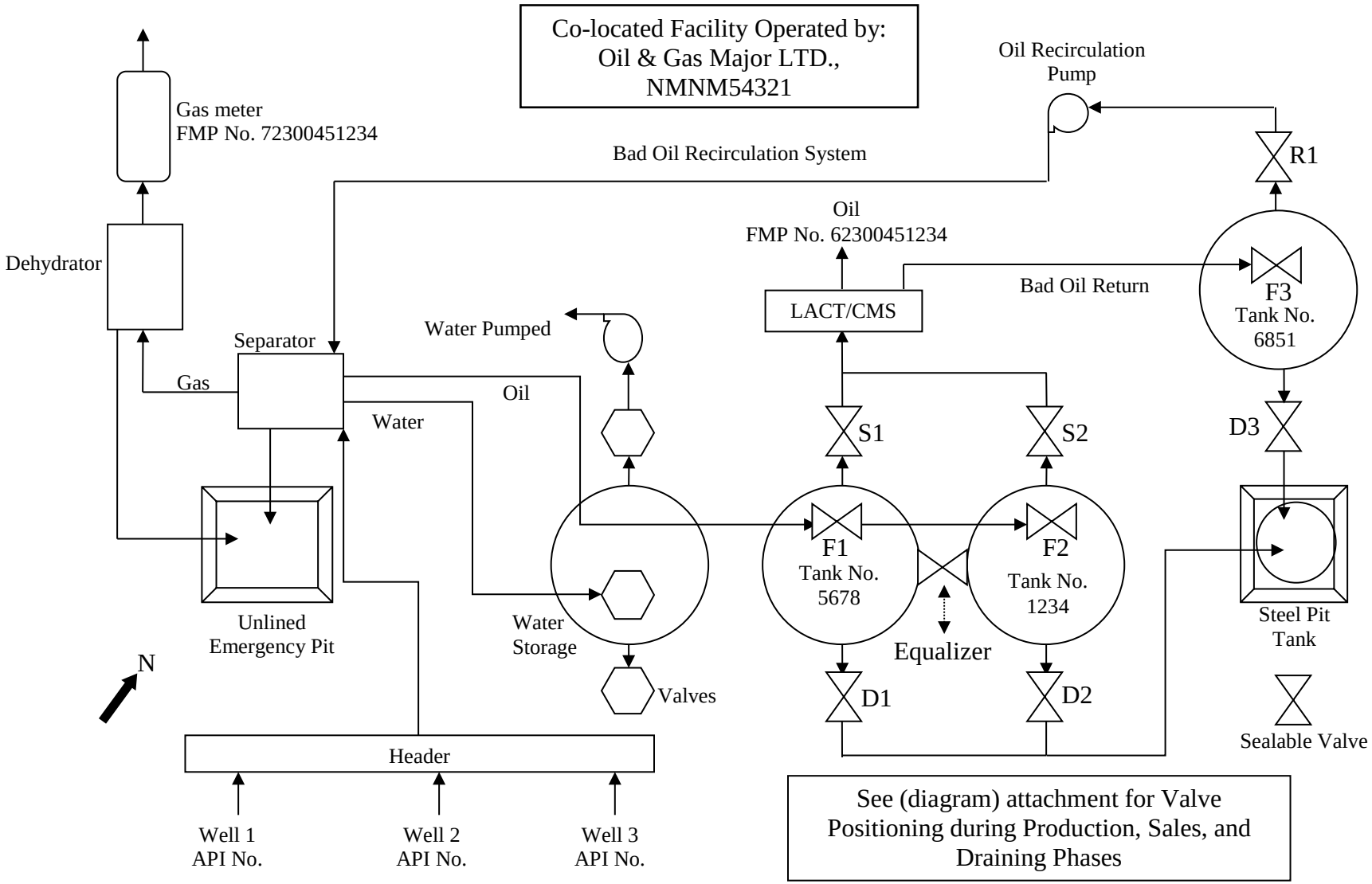

Facility Operator/Owner Name: ABC Oil and Gas
Federal/Indian Lease, unit PA, or CA Number: NMNM12345
Land Description: As defined in § 3170.3

Diagram #I-E:
F1, F2 and F3 are Fill Valves
S1 and S2 are Sales Valves
D1, D2 and D3 are Drain Valves
R1 is a Recirculation Valve

Valve Positioning in the Production Phase for FMP No. 62300451234
Production into 5678, 1234 and 6851
S1, F1, F2, F3 and R1 are Open
D1 and D2 are Sealed Closed
Equalizer is open

Valve Positioning in the Sales Phase
Production into 5678, 1234 and 6851
S1, F1, F2, F3 and R1 are Open
D1 and D2 are Sealed Closed
Equalizer is open

Valve Positioning in the Drain Phase

Draining from 5678	Draining from 1234	Draining from 6851
S1 and F1 are Sealed Closed	S2 and F2 are Sealed Closed	R1 is Sealed Closed
Equalizer is Sealed Closed	Equalizer is Sealed Closed	F3 is Sealed Closed
D1 and S2 are Open	D2 and S1 are Open	D3 Open
D2 Sealed Closed	D1 Sealed Closed	

Dehydrator
Fire box rated at 75,000 btu/hr operated 24 hrs/day, 20 hrs/day
75,000 btu/hr ÷ 1,157 btu/ft^3 X 20 ÷ 1,000 = 1.30 Mcf/day

Facility Operator/Owner Name: ABC Oil and Gas Federal/Indian Lease, unit PA, or CA Number: NMNM12345
Land Description: As defined in § 3170.3

Separator
Fire box rated at 150,000 btu/hr operated 4 mo/yr, 20 hrs/day
150,000 btu/hr ÷ 1,157 btu/ft^3 X 20 ÷ 1,000 = 2.59 Mcf/day

1157 btu/ft^3 as dry determined by gas analysis taken at FMP No. 72300451234 on MM/DD/YYY

Charge pump, water pump and oil recirculation pump are electric motor/gasoline engine powered and not subject to royalty-free.

The following components on liquid measurement metering system will be effectively sealed (list as appropriate) for FMP No.: 62300451234

1. Sample probe;
2. Sampler volume control;
3. All valves on lines entering or leaving the sample container excluding the safety pop-off valve (if so equipped). Each valve must be sealed in the open or closed position, as appropriate;
4. Meter assembly, including the counter head and meter head;
5. Temperature averager/recorder;
6. Pressure adjustment on the back-pressure valve downstream of the meter;
7. CMS or LACT;
8. Any drain valves in the system;
9. Manual sampling valves (if so equipped);
10. Valves larger than 1 inch on the diverter lines;
11. Right-angle;
12. Totalizer; and
13. Prover connections.

Facility Operator/Owner Name: Oil and Gas Plant Operations Inc. Federal/Indian Lease, unit PA, or CA Number: NMNM12345
Land Description: As defined in § 3170.3 Page 1 of 3

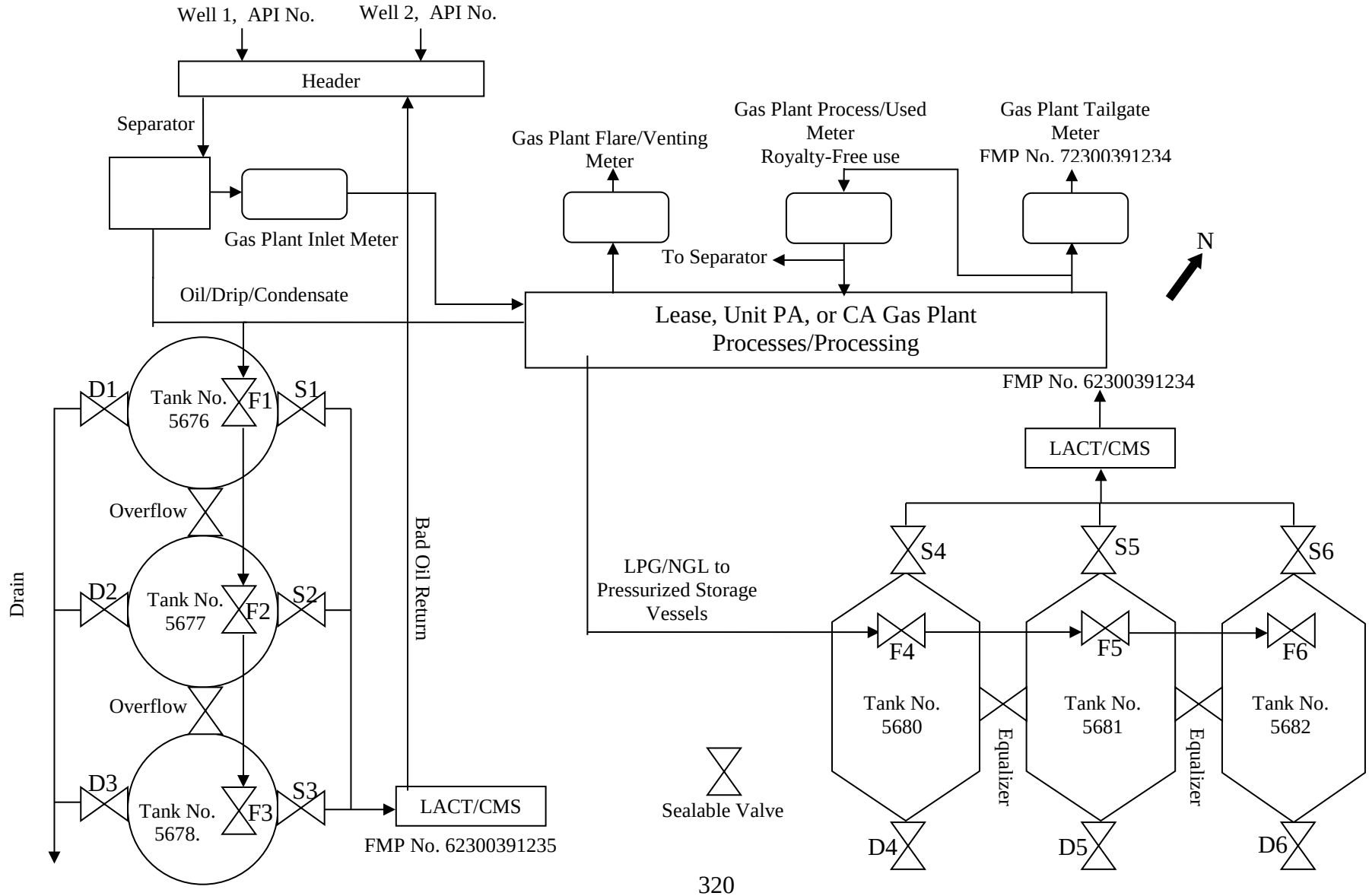

Facility Operator/Owner Name: ABC Oil and Gas Federal/Indian Lease, unit PA, or CA Number: NMNM12345
Land Description: As defined in § 3170.3 Page 2 of 3

Diagram #I-F:
F1, F2, F3, F4, F5, and F6 are Fill Valves
S1, S2, S3, S4, S5, and S6 are Sales Valves
D1, D2, D3, D4, D5 and D6 are Drain Valves

Valve Positioning in the Production Phase

Production into T5676	Production into T5677:	Production into T5678
D1 is Sealed Closed	D2 is Sealed Closed	D3 is Sealed Closed

Valve Positioning in the Sales Phase

Sales from T5676 through S1:	Sales from T5677 through S2:	Sales from T5678 through S3:
D1 is Sealed Closed	D2 is Sealed Closed	D3 is Sealed Closed

Valve Positioning in the Drain Phase

Draining from T5676	Draining from T5677:	Draining from T5678
S1 is Sealed Closed	S2 is Sealed Closed	S3 is Sealed Closed
F1 is Sealed Closed	F2 is Sealed Closed	F3 is Sealed Closed
Overflow is Sealed Closed	Overflow is Sealed Closed	Overflow is Sealed Closed
D1 is Open	D2 is Open	D3 is Open

Valve Positioning in the Production Phase

Production into T5680	Production into T5681:	Production into T5682
D4 is Sealed Closed	D5 is Sealed Closed	D6 is Sealed Closed

Valve Positioning in the Sales Phase

Sales from T5680 through S4:	Sales from T5681 through S5:	Sales from T5682 through S6:
D4 is Sealed Closed	D5 is Sealed Closed	D6 is Sealed Closed

Valve Positioning in the Drain Phase

Draining from T5680	Draining from T5681:	Draining from T5682
S4 is Sealed Closed	S5 is Sealed Closed	S6 is Sealed Closed
F4 is Sealed Closed	F5 is Sealed Closed	F6 is Sealed Closed
Overflow is Sealed Closed	Overflow is Sealed Closed	Overflow is Sealed Closed
D4 is Open	D5 is Open	D6 is Open

The following components on liquid measurement metering system will be effectively sealed (list as appropriate) for tanks numbered 5676, 5677, and 5678.

1. Sample probe;
2. Sampler volume control;
3. All valves on lines entering or leaving the sample container excluding the safety pop-off valve (if so equipped). Each valve must be sealed in the open or closed position, as appropriate;
4. Meter assembly, including the counter head and meter head;
5. Temperature averager/recorder;
6. Pressure adjustment on the back-pressure valve downstream of the meter;
7. CMS or LACT;
8. Any drain valves in the system;
9. Manual sampling valves (if so equipped);
10. Valves larger than 1 inch on the diverter lines;
11. Right-angle;
12. Totalizer; and
13. Prover connections.

Facility Operator/Owner Name: ABC Oil and Gas
Land Description: As defined in § 3170.3

Federal/Indian Lease, unit PA, or CA Number: NMNM98765
Page 1 of 2

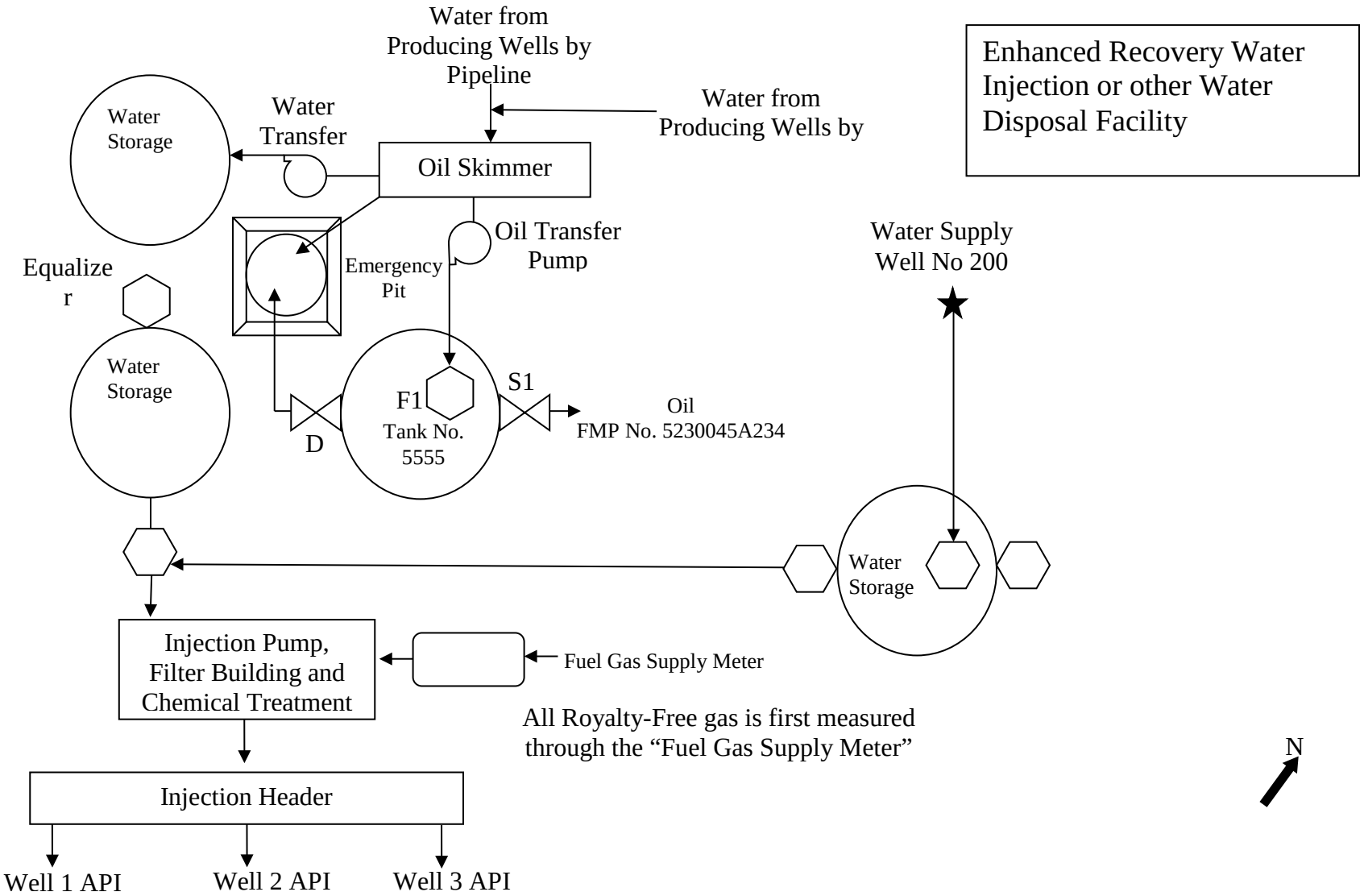

Attachment

Facility Operator/Owner Name: ABC Oil and Gas
Land Description: As defined in § 3170.3

Federal/Indian Lease, unit PA, or CA Number: NMNM98765
Page 2 of 2

Diagram #I-G:
F1 is the Fill Valve
S1 is the Sales Valve
D1 is the Drain Valve

Valve Positioning in the Production Phase
Production into T5555
S1 is Sealed Closed
F1 is Open
D1 is Sealed Closed

Valve Positioning in the Sales Phase
Sales form T5555
S1 is Open
F1 is Open
D1 is Sealed Closed

Valve Positioning in the Drain Phase for
Draining from T5555
S1 is Sealed Closed
F1 is Open
D1 is Open

Facility Operator/Owner Name: ABC Oil and Gas
Land Description: As defined in § 3170.3

Federal/Indian Lease, unit PA, or CA Number: NMNM98765
Page 1 of 3

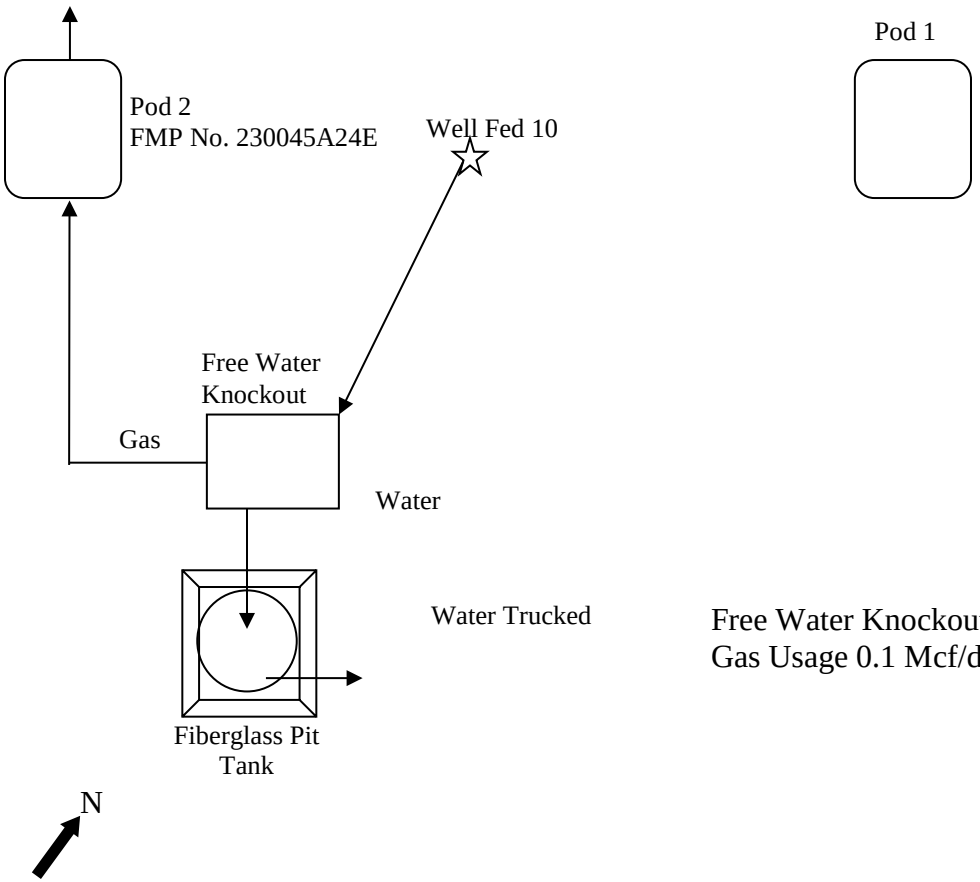

Free Water Knockout
Gas Usage 0.1 Mcf/day

Facility Operator/Owner Name: ABC Oil and Gas Federal/Indian Lease, unit PA, or CA Number: NMNM98765

Land Description: As defined in § 3170.3 Page 2 of 3

POD Facility
2

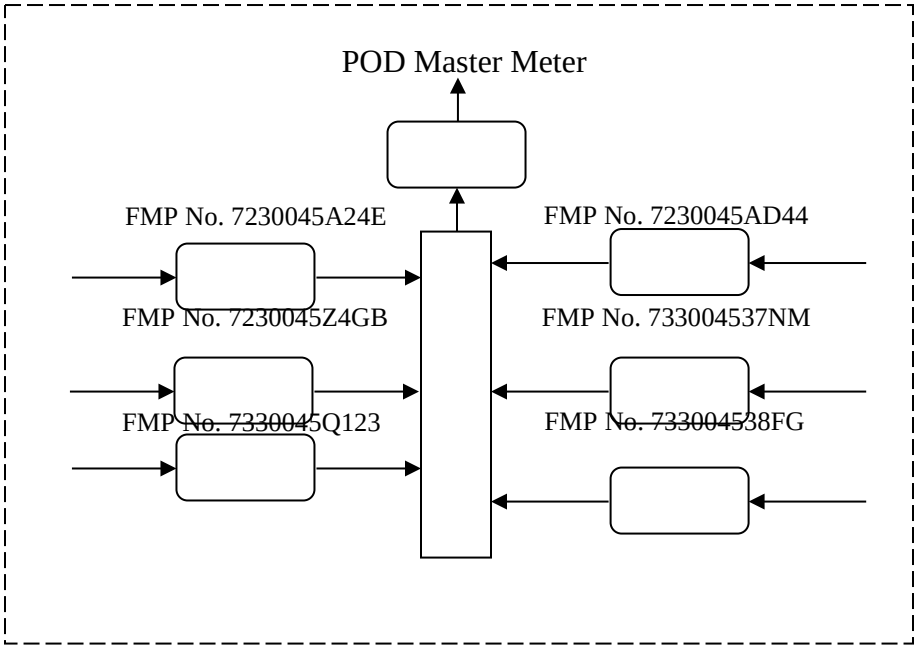

POD Facility
1

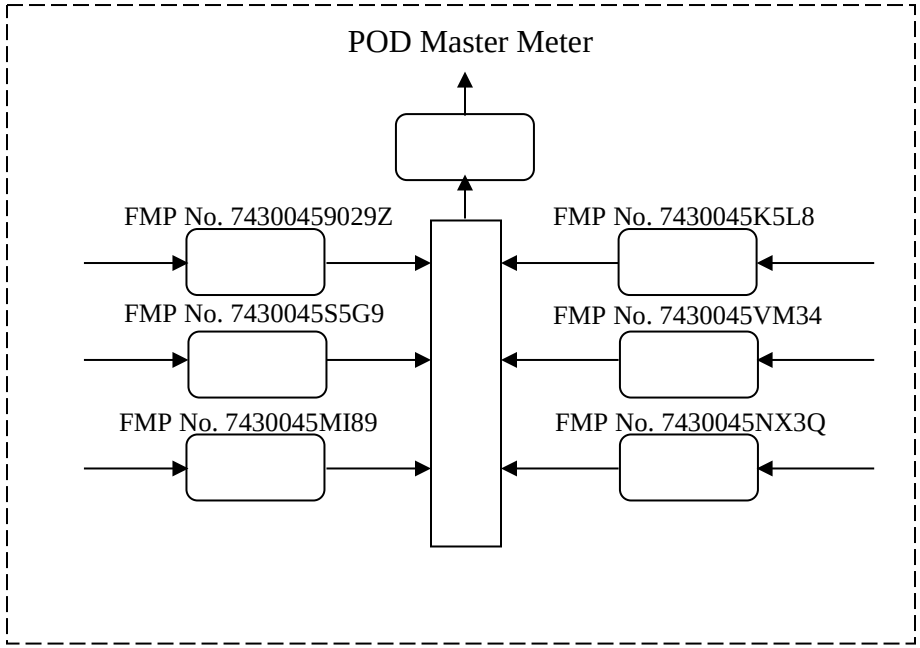

POD 1

FMP No. 74300459029Z
Federal/Indian Lease, unit PA, or CA Number: NMNM98765

FMP No. 7430045K5L8
Federal/Indian Lease, unit PA, or CA Number: NMNM98765

FMP No. 7430045S5G9
Federal/Indian Lease, unit PA, or CA Number: NMNM1234A

FMP No. 7430045VM34
Federal/Indian Lease, unit PA, or CA Number: NMNM56789D

FMP No. 7430045MI89
Federal/Indian Lease, unit PA, or CA Number: NMSF10254

FMP No. 7430045NX3Q
Federal/Indian Lease, unit PA, or CA Number: NMSF10254

POD 2

FMP No. 7230045A24E
Federal/Indian Lease, unit PA, or CA Number: NMNM56789

FMP No. 7230045AD44
Federal/Indian Lease, unit PA, or CA Number: NMNM54321A

FMP No. 7230045Z4GB
Federal/Indian Lease, unit PA, or CA Number: NMNM1234C

FMP No. 733004537NM
Federal/Indian Lease, unit PA, or CA Number: NMNM56789B

FMP No. 7330045Q123
Federal/Indian Lease, unit PA, or CA Number: NMSF10983

FMP No. 733004538FG
Federal/Indian Lease, unit PA, or CA Number: NMSF10254

Facility Operator/Owner Name: ABC Oil and Gas
Land Description: As defined in § 3170.3

Federal/Indian Lease, unit PA, or CA Number: NMNM12345
Page 1 of 4

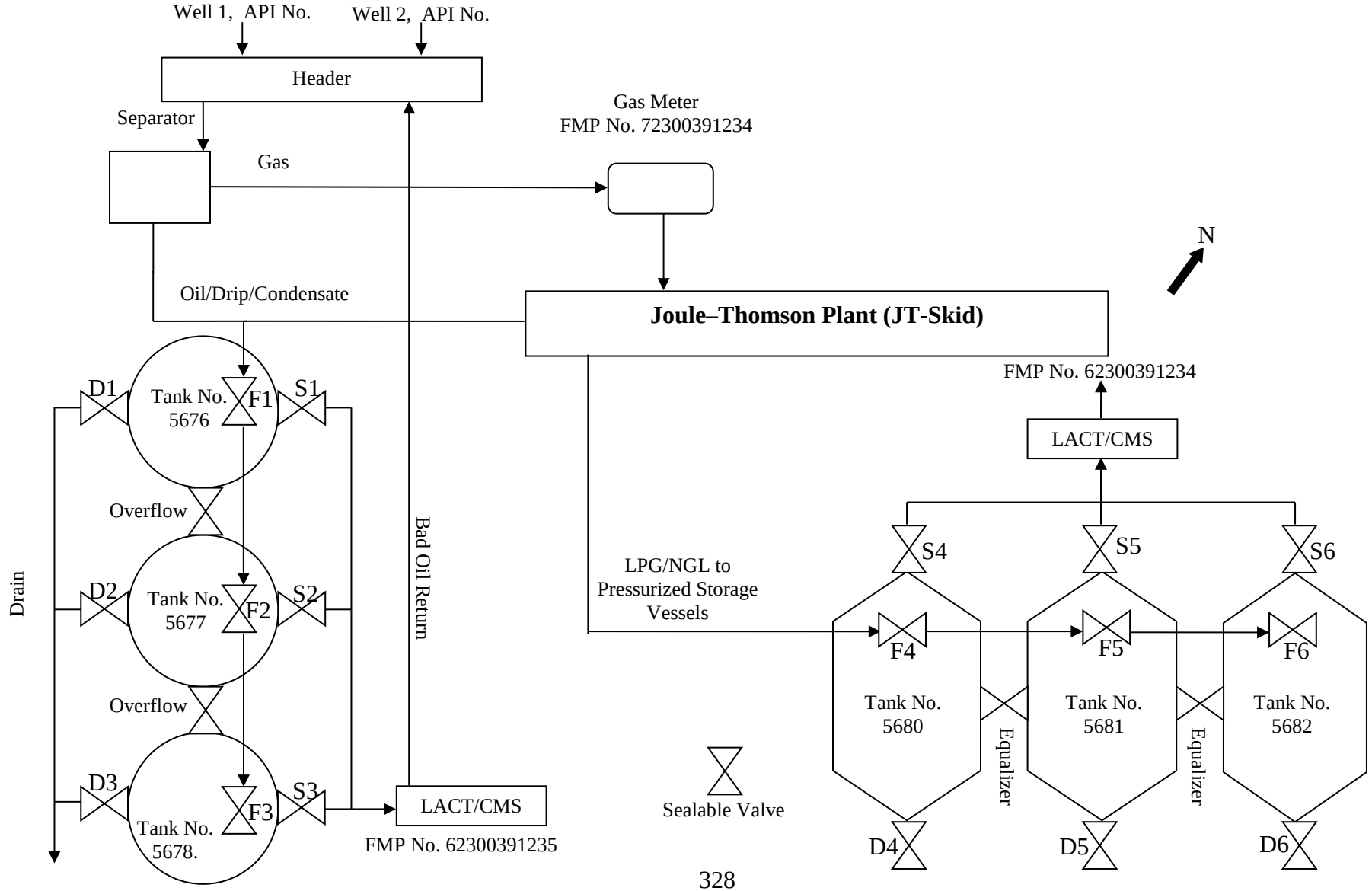

Facility Operator/Owner Name: ABC Oil and Gas Federal/Indian Lease, unit PA, or CA Number: NMNM12345
Land Description: As defined in § 3170.3 Page 2 of 4

Diagram #I-I:
F1, F2, F3, F4, F5, and F6 are Fill Valves
S1, S2, S3, S4, S5, and S6 are Sales Valves
D1, D2, D3, D4, D5 and D6 are Drain Valves

Valve Positioning in the Production Phase

Production into T5676	Production into T5677:	Production into T5678
D1 is Sealed Closed	D2 is Sealed Closed	D3 is Sealed Closed

Valve Positioning in the Sales Phase

Sales from T5676 through S1:	Sales from T5677 through S2:	Sales from T5678 through S3:
D1 is Sealed Closed	D2 is Sealed Closed	D3 is Sealed Closed

Valve Positioning in the Drain Phase

Draining from T5676	Draining from T5677:	Draining from T5678
S1 is Sealed Closed	S2 is Sealed Closed	S3 is Sealed Closed
F1 is Sealed Closed	F2 is Sealed Closed	F3 is Sealed Closed
Overflow is Sealed Closed	Overflow is Sealed Closed	Overflow is Sealed Closed
D1 is Open	D2 is Open	D3 is Open

Valve Positioning in the Production Phase

Production into T5680	Production into T5681:	Production into T5682
D4 is Sealed Closed	D5 is Sealed Closed	D6 is Sealed Closed

Facility Operator/Owner Name: ABC Oil and Gas Federal/Indian Lease, unit PA, or CA Number: NMNM12345
Land Description: As defined in § 3170.3 Page 3 of 4

Valve Positioning in the Sales Phase

Sales from T5680 through S4:	Sales from T5681 through S5:	Sales from T5682 through S6:
D4 is Sealed Closed	D5 is Sealed Closed	D6 is Sealed Closed

Valve Positioning in the Drain Phase

Draining from T5680	Draining from T5681:	Draining from T5682
S4 is Sealed Closed	S5 is Sealed Closed	S6 is Sealed Closed
F4 is Sealed Closed	F5 is Sealed Closed	F6 is Sealed Closed
Overflow is Sealed Closed	Overflow is Sealed Closed	Overflow is Sealed Closed
D4 is Open	D5 is Open	D6 is Open

The following components on liquid measurement metering system will be effectively sealed (list as appropriate) for tanks numbered 5676, 5677, and 5678.

1. Sample probe;
2. Sampler volume control;
3. All valves on lines entering or leaving the sample container excluding the safety pop-off valve (if so equipped). Each valve must be sealed in the open or closed position, as appropriate;
4. Meter assembly, including the counter head and meter head;
5. Temperature averager/recorder;
6. Pressure adjustment on the back-pressure valve downstream of the meter;
7. CMS or LACT;
8. Any drain valves in the system;
9. Manual sampling valves (if so equipped);
10. Valves larger than 1 inch on the diverter lines;
11. Right-angle;
12. Totalizer, manufacturer; and
13. Prover connections.

Facility Operator/Owner Name: ABC Oil and Gas Federal/Indian Lease, unit PA, or CA Number: NMNM12345
Land Description: As defined in § 3170.3 Page 4 of 4

The following components on liquid measurement metering system will be effectively sealed (list as appropriate) for tanks numbered 5680, 5681, and 5682.

1. Sample probe;
2. Sampler volume control;
3. All valves on lines entering or leaving the sample container excluding the safety pop-off valve (if so equipped). Each valve must be sealed in the open or closed position, as appropriate;
4. Meter assembly, including the counter head and meter head;
5. Temperature averager/recorder;
6. Pressure adjustment on the back-pressure valve downstream of the meter;
7. CMS or LACT;
8. Any drain valves in the system;
9. Manual sampling valves (if so equipped);
10. Valves larger than 1 inch on the diverter lines;
11. Right-angle;
12. Totalizer, manufacturer; and
13. Prover connections.

Separator
Fire box rated at 150,000 btu/hr operated, 20 hrs/day
150,000 btu/hr ÷ 1,450 btu/ft^3 (estimated) X 20 ÷ 1,000 = 2.07 Mcf/day

Facility Operator/Owner Name: ABC Oil and Gas
Land Description: As defined in § 3170.3

Federal/Indian Lease, unit PA, or CA Number: NMNM12345

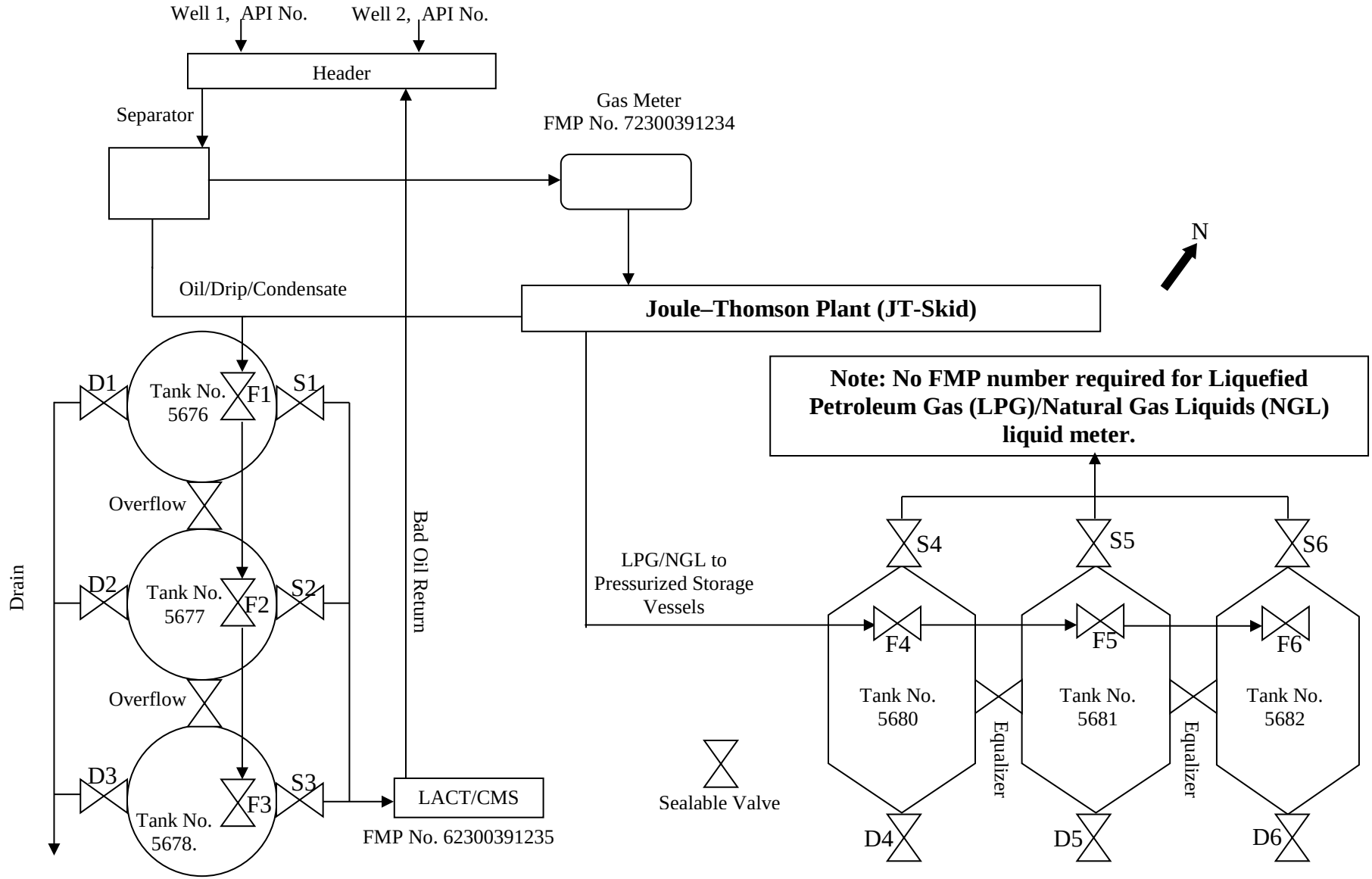

Facility Operator/Owner Name: ABC Oil and Gas Federal/Indian Lease, unit PA, or CA Number: NMNM12345
Land Description: As defined in § 3170.3 Page 2 of 3

Diagram #I-J:
F1, F2, and F3, are Fill Valves
S1, S2, and S3 are Sales Valves
D1, D2, and D3 Drain Valves

Valve Positioning in the Production Phase

Production into T5676	Production into T5677:	Production into T5678
D1 is Sealed Closed	D2 is Sealed Closed	D3 is Sealed Closed

Valve Positioning in the Sales Phase

Sales from T5676 through S1:	Sales from T5677 through S2:	Sales from T5678 through S3:
D1 is Sealed Closed	D2 is Sealed Closed	D3 is Sealed Closed

Valve Positioning in the Drain Phase

Draining from T5676	Draining from T5677:	Draining from T5678
S1 is Sealed Closed	S2 is Sealed Closed	S3 is Sealed Closed
F1 is Sealed Closed	F2 is Sealed Closed	F3 is Sealed Closed
Overflow is Sealed Closed	Overflow is Sealed Closed	Overflow is Sealed Closed
D1 is Open	D2 is Open	D3 is Open

Facility Operator/Owner Name: ABC Oil and Gas Federal/Indian Lease, unit PA, or CA Number: NMNM12345
Land Description: As defined in § 3170.3 Page 3 of 3

The following components on liquid measurement metering system will be effectively sealed (list as appropriate) for tanks numbered 5676, 5677, and 5678.

1. Sample probe;
2. Sampler volume control;
3. All valves on lines entering or leaving the sample container excluding the safety pop-off valve (if so equipped). Each valve must be sealed in the open or closed position, as appropriate;
4. Meter assembly, including the counter head and meter head;
5. Temperature averager/recorder;
6. Pressure adjustment on the back-pressure valve downstream of the meter;
7. CMS or LACT;
8. Any drain valves in the system;
9. Manual sampling valves (if so equipped);
10. Valves larger than 1 inch on the diverter lines;
11. Right-angle;
12. Totalizer, manufacturer; and
13. Prover connections.

Separator
Fire box rated at 150,000 btu/hr operated, 20 hrs/day
150,000 btu/hr ÷ 1,450 btu/ft^3 (estimated) X 20 ÷ 1,000 = 2.07 Mcf/day
1450 btu/ft^3 as dry determined by gas analysis taken at FMP No. 72300451234 on MM/DD/YYY