United States Department of the Interior
Bureau of Land Management

Finding of No Significant Impact
Environmental Assessment
BLM-UT-G010-2012-113

April 2013

EOG Resources, Inc.
Chapita Wells Unit Liquids Gathering System Phase 1 Project

Location:	**Township 9 South, Range 22 East, Sections 14, 15, and 21-28.** **Township 9 South, Range 23 East, Sections 16, 19, 20-22, 27-30, and 32-34** **Salt Lake Meridian**
Applicant/Address:	**EOG Resources, Inc.** **600 17th Street, Ste. 1000N** **Denver, CO 80202**

U.S. Department of the Interior
Bureau of Land Management
Vernal Field Office
170 South 500 East Vernal, Utah 84078
Phone: (435) 781-4400
Fax: (435) 781-4410

FINDING OF NO SIGNIFICANT IMPACT

Environmental Assessment

BLM-UTG010-2013-113

Chapita Wells Unit Liquids Gathering System Phase 1 Project

Based on the analysis of potential environmental impacts contained in the attached environmental assessment, and considering the significance criteria in 40 CFR 1508.27, I have determined that the proposed Phase 1 Chapita Wells Unit Liquids Gathering System and its components will not have a significant effect on the human environment. An environmental impact statement is therefore not required.

Authorized Officer

APR 05 2013

Date

United States Department of the Interior
Bureau of Land Management

Decision Record
Environmental Assessment
BLM-UT-G010-2012-113

April 2013

EOG Resources Inc.
Chapita Wells Unit Liquids Gathering System
Phase 1 Project

Location:	**Township 9 South, Range 22 East, Sections 14, 15, and 21-28.** **Township 9 South, Range 23 East, Sections 16, 19, 20-22, 27-30, and 32-34** **Salt Lake Meridian**
Applicant/Address:	**EOG Resources, Inc.** **600 17th Street, Ste. 1000N** **Denver, CO 80202**

U.S. Department of the Interior

Bureau of Land Management

Vernal Field Office

170 South 500 East

Vernal, Utah 84078

Phone: (435) 781-4400

Fax: (435) 781-4410

DECISION RECORD
Environmental Assessment
BLM-UT-G010-2012-113
Chapita Wells Unit Liquids Gathering System Phase 1 Project

The Chapita Wells Unit Liquids Gathering System (LGS) proposed action contains a mixture of site specific applications in Phases 1A and 1B and conceptual plans in Phase 1C. As analyzed in Environmental Assessment (EA) BLM-UT-G010-2012-113, the proposed action contains the following primary components:

- An amendment of existing federal right-of-way (ROW) UTU-87752 to include two to four new buried pipelines for produced or fresh water.
- New ROW UTU-89149 which would contain buried combined gas and oil pipelines.
- Fourteen central facilities which would include equipment for separating gas, oil, and produced water for appropriate disposal or sale.
- Additional pipelines which would facilitate the transport of produced water, fresh water, combined gas, water, and oil, and compressed gas for gas lift support to and from approximately 364 existing, 150 NEPA-approved, and up to 1,600 proposed wells to the centralized processing facilities. The majority of pipelines would be installed adjacent to existing roads.

In general, I approve the overall plan for the Liquids Gathering System, and commend the proponent on their proactive efforts to reduce existing sources of air pollutants. However, since a portion of this plan is not site specific, my Decision to proceed is as follows.

It is my Decision to authorize the following *portions* of the proposed action, subject to the below terms/conditions/stipulations, hereafter referred to as the Selected Alternative. Please refer to Figure 1.1 for a spatial understanding of the components of this Decision.

- *All* of Phase 1A, depicted in green on Figure 1.1, extending from T9S R23E Sec 16 to T9S R22E Sec 22 may proceed as analyzed in the EA.
- The following 10 portions of Phase 1B, depicted in orange on Figure 1.1, may proceed as analyzed in the EA:
    - The loop originating in T9S R23E Sec 29 and extending through Secs 33 and 28;
    - The spur originating in T9S R23E Sec 28 and extending through Sec 27;
    - The spur originating in T9S R23E Sec 33 and extending through Secs 32 and 29;
    - The spur originating in T9S R23E Sec 33 and extending through Sec 32;
    - The loop originating in T9S R23E Sec 30 and extending through Secs 25 and 24;
    - The spur originating and terminating in T9S R23E Sec 30;
    - The loop originating in T9S R22E Sec 25 and extending through Secs 26, 23, and 22;
    - The spur originating in T9S R22E Sec 22 and extending through Sec 27;

- The spur originating and terminating in T9S R22E Sec 23; and
- The spur originating in T9S R22E Sec 24 and terminating in T9S R23E Sec 19.

It is my Decision that the following portions of the proposed action will require additional site specific NEPA and NHPA Section 106 consultation before a decision to proceed can be issued, *unless* it is determined upon review of the site specific applications that the environmental effects are adequately disclosed in this EA and adequately covered in previous consultations.

- The Phase 1B spur, depicted in orange on Figure 1.1, originating in T9S R23E Sec 33 SWSW and extending through Secs 27 and 34;
- The Phase 1B spur, depicted in orange on Figure 1.1, originating in T9S R23E Sec 34 and extending through Sec 27;
- All of Phase 1C, depicted in pink on Figure 1.1; and
- All 14 central facilities.

Terms / Conditions / Stipulations:

Air Quality

- EOG will track the progress of implementation of the LGS in terms of wells connected and emission sources removed from well pads. Based on a per-well emissions reduction calculation, a cumulative tally of achieved reductions, as well as offsetting increases in emissions resulting from operation of additional central facilities for each pollutant, will be maintained. A summary results report will be provided to the BLM on a quarterly basis indicating net change in emissions.

Cultural Resources

- EOG will provide notification to its employees and contractors that unapproved collection of cultural artifacts is a crime under both federal and Utah laws.

Soils

- Disturbed soil surfaces will be stabilized immediately upon cessation of construction using BLM-approved Best Management Practices (BMPs). Soil stabilization would be maintained until successful re-establishment of vegetative cover.

Livestock Grazing

- If construction occurs during periods of grazing use, the Applicant will notify and coordinate activities with the grazing lessee to minimize conflicts with range use.
- Effects on range improvements are to be avoided. Anticipated unavoidable conflicts with range improvements will be coordinated with the BLM on a site specific basis to determine the need for relocation or other mitigation measures.

Raptors

- Raptor surveys will be conducted prior to construction during nesting period, as described in the Raptor BMPs included in Appendix A of the Vernal Resource Management Plan (RMP).

Paleontology

- For phases 1A and the portions of 1B covered in report 11-180, a permitted paleontologist will be present to monitor construction of the entire utility route. Construction monitoring will occur in section 28 and spot monitoring will occur on the rest of the utility route covered in report 11-180.
- For the portions of phase 1B not covered in report 11-180 and for phase 1C, paleontological surveys will be completed. A permitted paleontologist will be present to monitor excavations that would disturb bedrock as determined necessary by the BLM Authorized Officer based on review of the paleontological survey reports.
- If any vertebrate fossil(s) are found during construction within the Project Area, the Operator will report all occurrences of paleontological resources discovered to a Authorized Officer in the BLM Vernal Field Office.
- The operator will inform all persons associated with this project who would be involved in construction activities of the requirements for protecting paleontological resources.

Uinta Basin hookless cactus

- Prior to construction, all pipelines and facilities will be surveyed, resurveyed, or spot checked for Uinta Basin hookless cactus as required by current BLM and US Fish and Wildlife Service policy.
- Any routes found to be within the required Uinta Basin hookless cactus avoidance distance will be re-routed to maintain the appropriate avoidance distance.
- Should re-routes of a portion of the pipeline be found to be infeasible, the route will require separate site specific NEPA, mitigation, and Section 7 consultation to minimize the impacts of route construction on the populations.

Authorities: The authorities for this decision are contained in the following:

- Title V of the Federal Land Policy and Management Act of October 21, 1976, as amended (90 Stat. 2776; 43 U.S.C. 1761); and
- Section 28 of the Mineral Leasing Act of 1920, as amended (30 U.S.C. 185).

Compliance and Monitoring: In accordance with Title 43 of the Code of Federal Regulations (CFR), Section 2880 the rights-of-way will be inspected every 10 years to assure the continued use and development is within the approved lease stipulations, Development Plan and Designs.

The liquids gathering system could offset anticipated future emissions from the proposed Greater Chapita Wells Infill Development Project. BLM will ensure, within its respective legal authorities, that:

- the planned emissions reductions are implemented in a timely manner, quantifiable and enforceable, and there is effective monitoring of the emissions reductions;

- reductions are based on a per-pollutant basis (trading across pollutants would not be appropriate); and,
- emission control features will be permanent for the life of the proposed project, so that emission reductions continue for as long as mitigation is needed.

As requested by the Environmental Protection Agency, Region 8, the BLM certifies that the proposed liquids gathering project is voluntary (not a result of air quality regulations), would occur in the same project development area and air shed and by the same operator as the proposed Chapita Wells Infill Development Project, and would be in place for as long as the mitigation is needed. Reductions would be on a per-pollutant basis, and have been reported in the attached EA with that methodology in mind. Additionally, BLM has identified a system in the terms/conditions/stipulations section that would result in regular reporting to track implementation in a timely and quantifiable manner, which would facilitate focused monitoring and enforcement.

PLAN CONFORMANCE AND CONSISTENCY:

The Selected Alternative is in conformance with the Vernal Resource Management Plan (RMP) (BLM 2008). Goals and objectives of the RMP include management decisions that will "*encourage and facilitate the development by private industry of public land mineral resources in a manner that satisfies national and local needs and provide for economical and environmentally sound exploration, extraction and reclamation practices.*" (RMP, pg. 96).

The RMP ROD allows for processing applications, permits, and operating plans on public lands in accordance with applicable policy and guidance. It also allows for management of public lands to support goals and objectives of other resource programs, respond to public requests for land use authorizations, and acquire administrative and public access where necessary (RMP/ROD p. 86).

Alternatives Considered: The EA also considered the No Action alternative, but it was not selected because benefits to air quality in the area would not have been realized. No other alternatives were considered because no unresolved conflicts were identified.

Rationale for Decision: The Selected Alternative meets the BLM's purpose and need, which was to respond to EOG's request consistent with the BLM's multiple use mandate and reduce impacts to air quality and other resources.

The EA analysis included all direct and indirect impacts, so far as they were known given the conceptual nature of phase 1C, and all cumulative impacts. Therefore, although only a portion of the project is allowed to proceed under this Decision, and although it has been stated that additional NEPA analysis may be needed for the remainder of the project, NEPA analysis for the project has not been segmented.

A public comment period was held as described in the EA. Public notification of the project and its comment period took place via the Utah BLM Environmental Notification Bulletin Board, news releases, and email notifications. One comment letter was received from Uintah County expressing support for the project, however no substantive public comments were received.

Section 7 consultation under the Endangered Species Act was initiated on February 13, 2013. Concurrence with the "Not Likely to Adversely Affect" decision was received on March 21, 2013.

Section 106 consultation under the National Historic Preservation Act was conducted in association with the numerous Class III cultural surveys conducted in the project area. A summary of those surveys is included in the Class I Review of EOG Resources, Inc's Proposed Uintah Gathering System in Township 9 South, Range 22 East, and Township 9 South, Range 23 East in Uintah County Utah. MOAC Report No. 13-009. Documentation is available in the VFO BLM office upon request.

Tribal consultation was initiated on April 17, 2012. No comments or inquiries were received.

Authorized Officer

APR 05 2013
Date

Attachments: Environmental Assessment

Protest/Appeal Language:

Protest/Appeal Language for ROWs UTU87752 and UTU89149:
This decision may be appealed to the Interior Board of Land Appeals, Office of the Secretary, in accordance with the regulations contained in 43 CFR, Part 4 and the enclosed Form 1842-1. If an appeal is taken, your notice of appeal must be filed in this office (at the above address) within 30 days from receipt of this decision. The appellant has the burden of showing that the decision appealed from is in error.

If you wish to file a petition (request) pursuant to regulation 43 CFR 2801.10 or 43 CFR 2881.10 for a stay (suspension) of the effectiveness of this decision during the time that your appeal is being reviewed by the Board, the petition for a stay must accompany your notice of appeal. A petition for a stay is required to show sufficient justification based on the standards listed below. Copies of the notice of appeal and petition for a stay must also be submitted to each party named in this decision and to the Interior Board of Land Appeals and to the appropriate Office of the Solicitor (see 43 CFR 4.413) at the same time the original documents are filed with this office. If you request a stay, you have the burden of proof to demonstrate that a stay should be granted.

Standards for Obtaining a Stay

Except as otherwise provided by law or other pertinent regulation, a petition for a stay of a decision pending appeal shall show sufficient justification based on the following standards:

(1) The relative harm to the parties if the stay is granted or denied,

(2) The likelihood of the appellant's success on the merits,

(3) The likelihood of immediate and irreparable harm if the stay is not granted, and

(4) Whether the public interest favors granting the stay.

Protest/Appeals Language for the Rest of the Project:
This decision is effective upon the date it is signed by the authorized officer. The decision is subject to appeal. Under BLM regulation, this decision is subject to administrative review in accordance with 43 CFR 3165. Any request for administrative review of this decision must include information required under 43 CFR 3165.3(b) (State Director Review), including all supporting documentation. Such a request must be filed in writing with the State Director, Bureau of Land Management, Utah State Office, P.O. Box 45155, Salt Lake City, Utah, 84145-0155, within 20 business days of the date this Decision is received or considered to have been received.

If you wish to file a petition for stay, the petition for stay should accompany your notice of appeal and shall show sufficient justification based on the following standards:

(1) The relative harm to the parties if the stay is granted or denied,

(2) The likelihood of the appellant's success on the merits,

(3) The likelihood of immediate and irreparable harm if the stay is not granted, and

(4) Whether the public interest favors granting the stay.

BLM

United States Department of the Interior

Bureau of Land Management

Environmental Assessment UT G010-2012-113

April 2013

EOG Resources, Inc.

Chapita Wells Unit Liquids Gathering System Phase 1 Project

Location:	**Township 9 South, Range 22 East, Sections 14, 15, and 21-28.** **Township 9 South, Range 23 East, Sections 16, 19, 20-22, 27-30, and 32-34** **Salt Lake Meridian**
Applicant/Address:	**EOG Resources, Inc.** **600 17th Street, Ste. 1000N** **Denver, CO 80202**

U.S. Department of the Interior
Bureau of Land Management
Vernal Field Office
170 South 500 East
Vernal, Utah 84078
Phone: (435) 781-4400

Fax: (435) 781-4410

Chapita Wells Unit Liquids Gathering System Phase 1 Project

UT-G010-2012-113

Table of Contents

1 PURPOSE AND NEED 1
1.1 Introduction 1
1.2 Background 1
1.3 Need for the Proposed Action 2
1.4 Purpose of the Proposed Action 3
1.5 Conformance with BLM Land Use Plan(s) 3
1.6 Relationship to Statutes, Regulations, or Other Plans 3
1.7 Identification of Issues 4
1.8 Issues Considered but Eliminated from Further Analysis 5
1.9 Summary 5
2 DESCRIPTION OF ALTERNATIVES, INCLUDING THE PROPOSED ACTION 5
2.1 Introduction 5
2.2 Alternative A - Proposed Action 6
2.2.1 Liquids Gathering System Overview 7
2.2.2 Utility Corridors 11
2.2.3 Pre-construction Activities 11
2.2.4 Construction Activities 11
2.2.5 Operations and Maintenance 14
2.2.6 Schedule 17
2.2.7 Reclamation and Abandonment 17
2.2.8 Applicant-committed Design Features 18
2.3 Alternative B - No Action 20
3 AFFECTED ENVIRONMENT 20
3.1 Introduction 20
3.2 General Setting 20
3.3 Resources/Issues Brought Forward for Analysis 21
3.3.1 Air Quality and Climate 21
3.3.2 Cultural Resources 27
3.3.3 Fish and Wildlife Excluding USFWS Designated Species 28
3.3.4 Soils 29
3.3.5 Vegetation, Including Invasive Plant Species 33
3.3.6 Lands and Access 36
3.3.7 Livestock Grazing and Rangeland Health 38
3.3.8 Migratory Birds 41
3.3.9 Paleontological Resources 42
3.3.10 Threatened, Endangered, Proposed, or Candidate Plant Species 44
3.3.11 Surface Water Resources 46
4 ENVIRONMENTAL IMPACTS 47
4.1 Direct & Indirect Impacts 47
4.2 Alternative A - Proposed Action 48
4.2.1 Air Quality and Climate 48
4.2.2 Cultural Resources 49

4.2.3 Fish and Wildlife Excluding USFWS Designated Species 50
4.2.4 Soils 51
4.2.5 Vegetation, Including Plant Invasive Species 52
4.2.6 Lands and Access 54
4.2.7 Livestock Grazing and Rangeland Health 55
4.2.8 Migratory Birds 57
4.2.9 Paleontological Resources 58
4.2.10 Threatened, Endangered, Proposed, or Candidate Plant Species 59
4.2.11 Surface Water Resources 60
4.3 Alternative B - No Action 61
4.3.1 Air Quality 61
4.3.2 Cultural Resources 61
4.3.3 Fish and Wildlife Excluding USFWS Designated Species 61
4.3.4 Soils 61
4.3.5 Vegetation, Including Invasive Species 62
4.3.6 Lands and Access 62
4.3.7 Livestock Grazing and Rangeland Health 62
4.3.8 Migratory Birds 62
4.3.9 Paleontological Resources 62
4.3.10 Threatened, Endangered, Proposed, or Candidate Plant Species 62
4.3.11 Surface Water Resources 63
4.4 Cumulative Impacts Analysis 63
4.4.1 Air Quality 71
4.4.2 Cultural Resources 71
4.4.3 Fish and Wildlife Excluding USFWS Designated Species 71
4.4.4 Soils 72
4.4.5 Vegetation, Including Invasive Species 72
4.4.6 Lands and Access 72
4.4.7 Livestock Grazing and Rangeland Health 72
4.4.8 Migratory Birds 73
4.4.9 Paleontological Resources 73
4.4.10 Threatened, Endangered, Proposed, or Candidate Plant Species 73
4.4.11 Surface Water Resources 73
5 CONSULTATION AND COORDINATION 74
5.1 Persons, Groups, and Agencies Consulted 74
5.1.1 Endangered Species Act Section 7 Consultation 74
5.1.2 National Historic Preservation Act Section 106 Consultation 74
5.1.3 Government to Government Consultation 74
5.1.4 Summary of Public Participation 74
5.2 List of Preparers 74
6 References 75

Figures

Figure 1.1 Map of the Project Area
Figure 2.1 Pipeline Trench Schematics
Figure 2.2 Central Facility Layout
Figure 2.3 Central Facility Process Flow Diagram

Tables

Table 3.1 Monthly Climate Summary, Vernal Airport, Utah 21
Table 3.2 Criteria Pollutant Standards, PDS Increments, and Ambient Air Quality 23
Table 3.3 2002 Principal Source Facility Criteria Pollutant Emissions 24
Table 3.4 Estimate of 2012 Emissions from Oil and Gas Operations in Uinta Basin (tons/yr) 24
Table 3.5 2011 Uinta Basin Ozone Monitor Values, 8-hour Averaging 25
Table 3.6 2002 Principal Source Facility Hazardous Air Pollutant Emissions 26
Table 3.7 Soil Characteristics of the Project Area 31
Table 3.8 Soil Stabilization and Revegetation Factors in the Project Area. 32
Table 3.9 Vegetation Community Types that Occur within the Project Area 33
Table 3.10 Noxious Weeds and Invasive Species Potentially Occurring in the Project Area 35
Table 3.11 Existing Rights-of-Way Potentially Affected by the Proposed Action 36
Table 3.12 Traffic Count Summary for Principal County Roads Accessing the Project Are 38
Table 3.13 Summary of BLM Range Allotments 40
Table 3.14 Fossil Taxa Reported from the Project Area 43
Table 3.15 Federally Listed, Candidate, and Proposed Plants Potentially Found in the Project Area 45
Table 3.16 Flow Data from Selected USGS Gaging Stations near Project Area 46
Table 4.1 Annual Construction Emissions for the Proposed Action 48
Table 4.2 Annual Long-term Pollutant Emissions Reductions from the Proposed Action 49
Table 4.3 Estimated Existing Well Fluid Transport Truck Trips Eliminated by LGS 55
Table 4.4 Project Surface Disturbance by Grazing Allotment 56
Table 4.5 Range Improvements Near or Affected by the Proposed Action 56
Table 4.6 Proposed Action Paleontological Survey Results 59
Table 4.7 Cumulative Impacts Analysis Areas 64
Table 4.8 Types of Cumulative Impacts Analyzed 65
Table 4.9 Cumulative Surface Disturbance Impacts of the Proposed Action 67
Table 4.10 Uinta Basin Projected 2018 Controlled Oil and Gas Emissions 71
Table 5.1 List of Document Preparers 75
Table 5.2 BLM Interdisciplinary Team Members 75

Appendices

Appendix A - Interdisciplinary Team Checklist
Appendix B - Emissions Inventory

1 PURPOSE AND NEED

1.1 Introduction

This Environmental Assessment (EA) has been prepared to disclose and analyze the environmental consequences of the Chapita Wells Unit Liquids Gathering System Phase 1 Project as proposed by EOG Resources, Inc. (EOG, Applicant). The EA is a largely site-specific analysis of potential impacts that could result with the implementation of a Proposed Action or alternatives to the Proposed Action. The EA assists the U.S. Bureau of Land Management (BLM), the project supervising federal land management agency, in project planning and ensuring compliance with the National Environmental Policy Act (NEPA), and in making a determination as to whether any "significant" impacts could result from the analyzed actions. "Significance" is defined by NEPA and is found in regulation 40 Code of Federal Regulations (CFR) 1508.27. An EA provides evidence for determining whether to prepare an Environmental Impact Statement (EIS) or a statement of "Finding of No Significant Impact" (FONSI). A FONSI statement documents the reasons why implementation of the selected alternative would not result in "significant" environmental impacts (effects) beyond those already addressed in the *Vernal Field Office Record of Decision and Approved Resource Management Plan* (October 31, 2008) (BLM 2008). If the decision maker determines that this project has "significant" impacts following the analysis in the EA, then an EIS would be prepared for the project. If not, a Decision Record may be signed for the EA approving the selected alternative, whether the Proposed Action or another alternative.

1.2 Background

EOG proposes to amend its existing federal right-of-way (ROW) UTU-87752 to include two to four new buried pipelines for produced or fresh water. EOG also proposes a new ROW (UTU-89149) which would contain buried combined gas and oil pipelines. The majority of pipelines would be installed adjacent to existing roads. The project would facilitate the transport of produced water, fresh water, combined gas, water, and oil, and compressed gas for gas lift support to and from approximately 364 existing, 150 NEPA-approved, and up to 1,600 proposed wells to up to 14 proposed centralized processing facilities. The central facilities would include various equipment for separating gas, oil, and produced water for appropriate disposal or sale. Pipeline corridors have been designated phases 1A, 1B, and 1C based on ROW issues and the number, size, and contents of contained pipelines. The area of the proposed pipelines and project facilities which would be disturbed during construction constitutes the Project Area.

The Project Area is located within the southern portion of Township 9 South, Range 23 East and the southeastern portion of Township 9 South, Range 22 East, Salt Lake Meridian, in Uintah County, Utah (**Figure 1.1**), within the Chapita Wells Unit (UTU 63013X) within the Natural Buttes gas field.

The objective of the project is to enact a near-term improvement to air quality. It is designed to reduce various air pollutant emissions from existing and future operations by removing storage tanks from well sites, substantially reducing truck traffic currently required to transport liquids around the field, and concentrating liquids processing at a few facilities equipped with advanced emissions controls. A further objective of this project is to establish emission capacity now for potential future wells associated with infill drilling in the Chapita Wells Unit.

The entirety of this Project Area is included within the project area of the currently in-progress Greater Chapita Wells Natural Gas Infill Project Environmental Impact Statement (EIS), DOI-BLM-UT-G010-2009-0135-EIS. This proposed liquids gathering project would not foreclose options in that EIS, which focuses on infill drilling of gas wells, because approval of this proposed liquids gathering system will not guarantee that the proposed infill drilling would be approved. However, this liquids gathering project, if approved, may become applicant committed mitigation for the Greater Chapita Wells EIS. In their letter regarding Voluntary Emission Reductions and Mitigation Developed through the NEPA Process, dated July 27, 2012, the Environmental Protection Agency has indicated that the agency supports the BLM's plan to consider EOG's emission reductions from existing activity in the Greater Chapita Wells Project Area achieved by the liquids gathering system as potential mitigation measures for this company's future development provided that the conditions in that letter are met.

1: The emission reductions are achieved voluntarily and not as a result of any applicable air quality regulations.

2: BLM establishes that this approach is limited to situations where the same operator will implement the emissions reduction measures within the same project development area and air shed.

3: BLM ensures, within its respective legal authorities, that the planned emissions reductions are implemented.

4: BLM ensures the following is clearly articulated in the EA:

- The liquids gathering system could offset anticipated future emissions from the proposed infill development.
- The emission reductions are implemented in a timely manner, quantifiable and enforceable, and there is effective monitoring of the emission reductions.
- Reductions are based on a per-pollutant basis, trading across pollutants would not be appropriate.
- Emission control features will be permanent for the life of the proposed project, so that emission reductions continue for as long as mitigation is needed.

The BLM certifies that the proposed liquids gathering project is voluntary (not a result of air quality regulations), would occur in the same project development area and air shed and by the same operator as the infill development proposed in the EIS, and would be in place for as long as the mitigation is needed. Reductions would be on a per-pollutant basis, and have been reported in this EA with that methodology in mind. Additionally, BLM has identified a system in the air quality mitigation measures section that would result in regular reporting to track implementation in a timely and quantifiable manner, which would facilitate focused monitoring and enforcement.

1.3 Need for the Proposed Action

The BLM’s need with regard to this project is to respond to EOG’s request to amend an existing federal ROW grant. BLM will determine whether the proposed project, or an alternative to the proposed project, would best respond to EOG's request in a manner consistent with existing contractual obligations between EOG and the U.S, as well as BLM’s multiple use mandate.

Decision to be Made

The Proposed Action contains a mixture of site specific applications and programmatic plans. Approval of the Proposed Action would result in amendment of existing ROW UTU-87752 (buried fresh and produced water pipelines), and new ROW UTU-89149 (buried combined gas and oil pipelines) for phases 1A and 1B. Future applications and site specific NEPA would be needed for Phase 1C, unless the environmental effects associated with final facility locations for Phase 1C are adequately disclosed in this EA . Approval of the No Action Alternative would result in a continuation of the existing condition, namely trucking of produced water, fresh water, and oil from individual well pads to water disposal ponds, water injection wells, and oil sales points.

1.4 Purpose of the Proposed Action

The purpose of the amendment would be to reduce impacts to air quality and other resources and facilitate continued development of the project area federal lease resource.

1.5 Conformance with BLM Land Use Plan(s)

The proposed operations within the Chapita Wells Unit are in conformance with the Vernal Resource Management Plan (RMP) (BLM 2008). Goals and objectives of the RMP include management decisions that will "*encourage and facilitate the development by private industry of public land mineral resources in a manner that satisfies national and local needs and provide for economical and environmentally sound exploration, extraction and reclamation practices.*" (RMP, pg. 96).

The RMP ROD allows for processing applications, permits, and operating plans on public lands in accordance with applicable policy and guidance. It also allows for management of public lands to support goals and objectives of other resource programs, respond to public requests for land use authorizations, and acquire administrative and public access where necessary (RMP/ROD p. 86).

1.6 Relationship to Statutes, Regulations, or Other Plans

The Federal Land Policy and Management Act of 1976 (FLPMA) (Public Law 94-579, 43 United States Code [USC] 1701 et seq.) recognizes oil and gas development as one of the "principal" uses of public lands. Federal mineral leasing policies (Mineral Leasing Act [MLA] of 1920, 30 USC 188 et seq.) and the regulations by which they are enforced recognize the statutory right of lease holders to develop federal mineral resources to meet continuing national needs and economic demands so long as undue and unnecessary environmental degradation is not incurred.

The proposed project is designed to comply with BLM's Utah Public Lands Health Standards (BLM 1997). The proposed project also will be required to comply with federal policies related to riparian habitats, floodplains, and ground water protection, including Presidential Executive Order (EO) 119883 (Floodplain Management), BLM Utah Instruction Memorandum (IM) 2005-091 (Riparian Policy),and BLM Utah IM 2010-005 (Groundwater Protection). The proposed project is also designed to be consistent with requirements of the Endangered Species Act (ESA) of 1973 (16 U.S.C. 1531 *et seq*) and Section 106 of the National Historic Preservation Act (NHPA) (36 CFR Part 800).

There are no comprehensive State of Utah plans covering the Project Area. However, the Utah State Institutional Trust Lands Administration (SITLA) has leased all of the state lands within

the vicinity of the Project Area for oil and gas production. The objectives of SITLA are to produce funding for the state school system. Facilitation of production from state or federal leases could lead to increased revenue to the State of Utah. Implementation of the proposed project or alternatives is therefore consistent with the State of Utah's objectives.

Uintah County has developed a Plan (Uintah County 2005) regarding development on public lands within the County. The Uintah County General Plan emphasizes: 1) multiple-use management practices and 2) responsible use and optimum utilization of public land resources. Multiple use is defined in the plan as including, but not limited to, the following historically and traditionally practiced resource uses: grazing, recreation, timber, mining, oil and gas development, agriculture, wildlife habitat, and water resources. The proposed project is consistent with the Uintah County Plan.

Information regarding past federal decisions regarding oil and gas development in the Project Area is contained in the Record of Decision for the Chapita Wells-Stagecoach Area Natural Gas Development Project (BLM 2008b).

1.7 Identification of Issues

Public notification of the proposed project was made with the posting of the project summary on the Utah BLM's online Environmental Notification Bulletin Board (ENBB) on April 17, 2012. The web site provides notification of all BLM NEPA actions in the Utah field offices.

The BLM Vernal Field Office (VFO) interdisciplinary team (ID Team) reviewed the ROW application, including the Surface Use Plan and determined the resources and values which could be affected by the proposed project and which would not. The results of the ID Team review is summarized in **Appendix A**. Issues brought forward for analysis include:

Air Quality

- Overall impacts to air quality are anticipated to be positive and will be quantified in the EA.

Cultural Resources

- Cultural resources determined to be eligible for inclusion in the National Register of Historic Places are identified within the Area of Potential Effect of the proposed project.

Fish and Wildlife Excluding USFWS Designated Species

- Yearlong crucial antelope habitat overlaps the proposed project.
- Mule deer fawning habitat occurs in section 26, T9S, R22E.
- All sections in T9S, R23E contain white-tailed prairie dog habitat.

Invasive Plants, Noxious Weeds, and Vegetation

- Native vegetation and plants will be disturbed creating the potential for introduction or spread of non-native plants.

Soils

- There is a potential for increased soil erosion following surface disturbance.

Lands and Access

- Implementation of the proposed project could potentially intercept numerous existing federal ROWs.

Livestock Grazing and Rangeland Health

- The proposed project would involve surface disturbance to portions of the Seven Sisters and Coyote Wash allotments and could disturb existing range improvements.

Migratory Birds

- Construction of the proposed project could result in disruption to activities at existing nest sites.

Paleontology

- The proposed project overlaps geologic formations of high potential for producing fossils, and fossils of scientific importance have been recovered from the vicinity.

Threatened, Endangered, Proposed, or Candidate Plant Species

- The proposed project will overlap potential habitat for Uinta Basin hookless cactus.

Surface Water Quality

- Construction-related disturbance could result in sediment transport into local drainages.
- Production phase spills could result in contamination of local drainages.

1.8 Issues Considered but Eliminated from Further Analysis

The BLM ID Team determined that a number of resources and values are not present within the vicinity of the proposed project or would not be affected by the proposed project. These resources, and the justification for not analyzing them further, are indicated by a "no impact" or "not present" determination in the ID Team checklist, included as **Appendix A**.

1.9 Summary

This chapter has presented the purpose and need of the proposed project, as well as the relevant issues, i.e., those elements of the human environment that could be affected by the implementation of the proposed project. In order to meet the purpose and need of the proposed project in a way that resolves the issues, the BLM has considered and/or developed a range of action alternatives. These alternatives are presented in **Chapter 2**. The potential environmental impacts or consequences resulting from the implementation of each alternative considered in detail are analyzed in **Chapter 4** for each of the identified issues.

2 DESCRIPTION OF ALTERNATIVES, INCLUDING THE PROPOSED ACTION

2.1 Introduction

The ID Team rigorously explored and objectively evaluated all reasonable alternatives that meet the underlying need for the proposed project. In conformance with direction from the Council on Environmental Quality *(CEQ Forty Questions - 1. Range of Alternatives),* alternatives analyzed in detail are practical or feasible from a technical and economic standpoint, and reasonable from the standpoint of common sense, rather than those which might be simply desirable from the standpoint of the applicant. A "virtual" on-site inspection of the proposed project was conducted

with a review of high-resolution digital imagery by BLM, EOG, and NEPA contractor staff on November 2, 2011. Field visits to selected areas identified during the virtual on-site were conducted on November 3, 2011. BLM-requested changes to the Proposed Action have been incorporated based on these inspections. Based on the proposal, and the on-sites, the ID Team determined that the following alternatives would be analyzed in detail for this EA:

Alternative A - Proposed Action, which represents the applicant's proposal involving installation of a gas and liquids gathering pipeline system and ancillary facilities; and

Alternative B - No Action, which represents continuation of existing management activities within the Project Area.

2.2 Alternative A - Proposed Action

EOG proposes to install a three-phase liquids gathering system (LGS) in the Chapita Wells Unit (CWU). Geographically, the LGS would be installed in common utility corridors in three separate phases, depending on right-of-way (ROW) requirements and numbers and types of contained pipelines. To initiate this project, under Phase 1A, EOG would amend its existing federal ROW UTU-87752 to include four to eight new buried pipelines for the transportation of produced water, fresh water, and compressed natural gas. Under Phase 1A, EOG also proposes a new ROW (UTU-89149) which would contain buried combined gas and oil pipelines. Under phases 1B and 1C, as a Unit action (no ROW required), EOG would install various pipelines for produced or fresh water, combined produced water, gas, and oil, and high pressure gas lines (to power gas lift production optimization) to well heads throughout the project area..

Functionally, the project would facilitate the movement of various fluids around the gas field through the construction and operation of four buried pipeline transport systems:

1. combined gas, produced water, and oil ("multiphase") transport system;
2. produced water transport system;
3. fresh water transport system, and
4. gas lift support transport system.

The transport systems would move fluids between existing and future wells, proposed centralized processing facilities, water sources, water disposal sites, and gas and oil sales points. Each system would operate independently through buried pipelines installed in common utility corridors. These ROWs and unit actions would be located in Sections 14-15 and 21-28 of T9S, R22E and Sections 16, 19-22, 27-30 and 32-34 of T9S, R23E S.L.B.&M (**Figure 1.1**). .

A summary of estimated construction and life-of-project surface disturbance resulting from implementation of the Proposed Action is included in **Table 2.1**. A more detailed discussion of the various phases of this project is included in subsequent sections.

Table 2.1 Proposed Action Surface Disturbance

Facility	Length (ft.) or Count	Construction		Life-of-Project	
		Disturbance Width (ft.)	Disturbance (acs.)	Disturbance Width (ft.)	Disturbance (acs.) [1]
Pipelines					
Phase 1A	43,518	70	69.9	50	50.0
Phase 1B	94,968	70	152.6	50	109.0
Phase 1C	264,733	70	425.4	50	303.9
Total Pipelines	403,219		648.0		462.8
Central Facilities (Phase 1)					
Facilities (maximum)	14		56.0		56.0
Access Roads	21,000	50	24.1	18	8.7
Total Facilities			80.1		64.7
Total Proposed Action			728.1		527.5

[1] Assumes complete and final reclamation

2.2.1 *Liquids Gathering System Overview*

A LGS is a system of buried pipelines within a common utility corridor that would facilitate the transport of gas, oil, produced water, and fresh water among existing, approved, and proposed Mesaverde wells, up to 14 centralized gathering facilities, existing freshwater water supply ponds, water injection wells, an existing produced water disposal pond, gas sales lines, and oil sales points (**Figure 1.1**). The objective of the LGS is to reduce emissions, particularly of volatile organic compounds (VOCs). The use of centralized facilities would reduce the potential for exposure to H_2S present in the transported liquids and increase safety for field operations and personnel. Installation of the LGS and central facilities would also increase productivity of the wells for the life of the field by more readily stabilizing pressures and balancing the accumulation of produced liquids. Following construction, EOG would furnish as-built diagrams and maps to BLM illustrating the completed installation. One tank may be left on most of the well pads (two on pads containing Wasatch wells) for use in the event of an emergency.

Pipelines within a local area would be installed within one or two open trenches. Because of the numbers of pipelines, it is likely that most or all of the LGS would require two trenches to accommodate all of the pipelines.

The LGS would be divided among "trunkline" pipeline corridors, which would move fluids around the field while typically connecting to the central facilities. The trunklines are indicated as phases 1A and 1B on **Figure 1.1**. In addition to the trunklines, the LGS would include spur pipeline corridors connecting to individual well pads, which would move fluids between individual well sites and the trunklines or central facility locations. The spur pipeline corridors are identified as Phase 1C on **Figure 1.1**. It is likely that pipe diameters would be somewhat larger for the trunklines than the spur pipelines.

The project life would equate to the productive lives of the wells, which can be up to 40 years for an individual well. For the 364 connected existing wells, data provided by EOG indicate that, over the next 22 years, an average of approximately 14,800 heavy truck trips and their associated environmental effects would be eliminated annually from existing wells. Annual reductions

would vary from approximately 35,000 trips to approximately 7,000 trips as individual well production declines over time.

Truck loading and traffic would also be minimized or eliminated at previously NEPA-approved wells that have not yet been drilled, as well as for proposed wells currently undergoing NEPA analysis in the Greater Chapita Wells Natural Gas Infill Project EIS (GCW EIS), which EOG estimates to be about 150 wells which is projected to be approximately 1,600 wells. Reductions in future truck traffic from servicing these wells would be proportional to the number of wells.

Construction and operation of the LGS would involve four separate, but spatially related, buried pipeline systems. Individual pipeline corridors would, in general, be installed adjacent to existing gas transportation pipelines and/or roads. The potential extent of each system could overlap any of phases 1A, 1B, or 1C.

1. Combined Fluids Transport System

Mesaverde wells produce the vast majority of water and oil production in the project area. Based upon EOG well and pad counts as of April 30, 2012, the proposed LGS would initially gather fluids from approximately 364 existing Mesaverde wells on 328 well pads. Fluid transport would be powered by wellhead pressure. All produced fluids (gas, water, and oil) would be separated at the wellhead, recombined, and transported through buried pipelines from the wellheads to the central facilities for various types of processing. All gas/oil mixtures would be separated. Gas would be transported from the field through sales line connections located at each of the central facilities and oil would be trucked from the field [1].

The combined fluids transport system would be organized into 10 "pods," which would connect variable numbers of wells to one central facility. Valves and pipelines connecting pods would be installed during construction to better utilize central production facilities. All connecting pipelines would be located within the existing utility corridors where feasible, depending on topographic constraints on pipeline placement.

2. Gas Lift Support Transport System

Maximization of gas recovery would be assisted by controlling and maintaining reservoir pressures in the field. In support of this goal, natural gas can be re-injected into pressure-depleted portions of the field to assist in recovery ("gas lift") of additional gas from Mesaverde reservoirs. For this purpose, a gas transportation system, using high pressure gas pipelines, would be installed to transport natural gas for pressure maintenance operations from the central facilities to the well sites. Gas transport would be accomplished using gas-fired or electrical compressors installed at the central facilities.

Installation could occur within any portion of Phase 1, although the exact locations of gas lift operations cannot be accurately predicted at this time. However, pipelines to accommodate gas lift operations would be installed simultaneously with other fluid transport pipelines, even if not

[1]Approximately 123 existing and an uncertain number of future Wasatch wells would not be included in the gathering system. Two tanks on each pad would be used where production is obtained from wells targeting only the Wasatch reservoir due to mineral ownership differences which preclude commingling of the produced Wasatch gas and oil in a pipeline with Mesaverde gas and oil. Liquids would be swabbed into tanks, as required. Trucks would continue to be used to periodically remove oil and produced water from tanks receiving fluids from Wasatch wells.

all of the pipelines are initially placed in use. For this analysis, all LGS wells are assumed to have connections to the gas lift transport system.

The layout of the gas lift transport system would be identical to that of the combined fluids transport system, with gas moving in the direction opposite to that of the combined fluids and in separate pipelines. As is the case with the combined fluids system, the gas lift system would be organized into the same 10 pods, with each pod being associated with an individual central facility.

3. Produced Water Transport System

Combined fluids from the wellheads would be re-separated at the central facilities, as discussed below. All produced water from Mesaverde wells would then be transported by buried pipeline from the central processing facilities to approved injection wells in the vicinity of the Project Area or, via an existing pipeline, to injection wells several miles to the north, rather than trucked as is currently the case. Fluid transport would be provided by electrically powered pumps located at the central facilities. The pumps may be initially operated using electric generators prior to installation of electric lines to the facilities. Two existing produced water ponds on state surface would remain open for temporary storage prior to injection when necessary, one at Red Wash (SE 2, T9S, R22E) and a small pond at the Coyote facility (NE 16, T9S, R23E).

4. Freshwater Supply Transport System

One 4-6 inch freshwater pipeline would be installed from a freshwater pond in Section 16, Township 9S, Range 23E, which obtains water via an existing underground pipeline from the Bonanza Freshwater Ponds (State Water Right #49-225[A31368]) in Section 26, Township 8S, Range 23E (currently in use throughout the field). Fluid transport would be accomplished by an electric pump, possibly generator-powered, located in Section 16 at the freshwater ponds. Additional, similar pumps would be installed, where necessary, within the distribution system to maintain transport pressure levels. Freshwater offloading sites would be spaced throughout the field, likely at some or all of the central facilities. One or two fiberglass or stainless steel 400-bbl tanks for freshwater storage may be placed at the loadout stations.

The pipeline would be installed in the Phase 1A and Phase 1B utility corridors, and ultimately could be extended throughout Phase 1C. Installation would occur simultaneously with installation of other fluid transport pipelines, without incurring additional surface disturbance, even though the well site phase might not initially be used for freshwater delivery. Installation of this freshwater pipeline would make water for drilling and completion operations available in central locations throughout the field, which would reduce distances traveled by fresh water haulers to new wells. Fluid transport direction would be from the freshwater ponds to the field delivery locations.

Central Facilities

The central facilities would separate produced water, oil, and any gas that arrives from the well sites. Produced water would be routed to the water disposal pipeline for transport to an injection well or, in emergency situations, to a disposal pond. Gas would be sent to a vapor recovery unit (VRU) and then to a sales pipeline or, in limited circumstances, to an on-site flare or combustor. Oil would be sent to one of two heater treaters for breakdown of oil-water emulsions. Oil would then be sent to a lease automated custody transfer (LACT) unit which monitors the fluid and would either send it back to the heater-treaters for further processing or would route it to truck sales. All of the production equipment at the central facilities would initially be gas powered

until it is feasible to bring electric lines into the field. The central facilities are expected to be electrically powered within a few years of project approval, following a separate NEPA analysis.

Specifications regarding the size, number, composition, and construction disturbance of the various pipelines and central facilities are summarized in **Table 2.2**.

Table 2.2 Proposed Gathering System Pipeline Components

Component	Approx. Length (ft.)	Approx. Length (mis.)	Construction Disturbance (acs.)	Components
Phase 1A -Trench 1 -Trench 2	43,518	8.2	69.9	Two 4-6” poly for fresh and produced water. One to two 4-6” reinforced poly for compressed gas. Three 4-6" reinforced poly lines (flexpipe or similar) for multiphase gathering and gas lift distribution.
Phase 1B	94,968	18.0	152.6	Up to six 3-10” reinforced poly lines for multiphase gathering, gas lift, produced water, and fresh water.
Phase 1C	264,733	50.1	425.4	Up to six 3-10” reinforced poly lines for multiphase gathering, gas lift, combined liquids gathering, and fresh water.
Totals	403,219	76.4	648.0	
Central Facilities (Phase 1)				
Facilities	NA	NA	56.0	Up to 14 central facilities, located proximal to existing roads and facilities.
Access Roads (ft.)	21,000	4.0	24.1	One-way access and egress segments to each of the central facilities
Total Facilities			80.1	
Total Proposed Action			728.1	

All gathering system pipelines would be buried

Implementation Plan

It is anticipated that the LGS system would be completed in phases, as described in **Table 2.3**. The main trunk system (phases 1A and 1B) for liquids and gas/oil transportation, is site specific, and would be constructed in separate but integrated segments. The central facilities would also be part of Phase 1, although the exact location and number are not fully determined at this time. Phase 1C is anticipated to be constructed very close to the positions indicated on **Figure 1.1** In the event of substantial deviations from these locations, additional NEPA analysis of the changed routes would be required prior to installation of these pipeline corridors. Full construction of the Phase 1 LGS is anticipated to be completed within four to seven years of project approval.

Approval of the Proposed Action would result in amendment of existing ROW UTU-87752 (main buried fresh and produced water gathering pipelines), and a new ROW UTU-89149 (main buried combined gas and oil pipelines. In addition, a short portion of the Phase 1A line (approximately 6,200 feet) would terminate in State Section 16 of T9S, R23E at freshwater Pond 4 outside the CWU, and approximately 700 feet of one of Phase 1C pipelines in Section 35, T9S, R23E would be located outside the CWU.

2.2.2 *Utility Corridors*

Phase 1 pipeline corridors would be located along existing roads to the extent practicable. EOG is requesting a 70-foot wide temporary corridor for construction in Phase 1, to accommodate two trenches, with a 50-foot wide permanent corridor for long term production and maintenance.

For all phases, the pipeline material used is corrosion resistant and incorporates a small pigging apparatus and associated pig launchers and receivers for cleaning the pipelines. Surface disturbing activities would be confined within the ROW. The Phase 1A Trench 1 would contain two 6-inch DR9 HDPE (poly, 250 psi) pipelines and one or two 4-inch Flexpipe 601 (reinforced poly, 1500 psi) pipelines. Phases 1B and 1C would contain one 3-10 inch DR9 HDPE (poly, 250-psi) produced water pipeline, one 3-10 inch DR9 HDPE (poly, 250 psi) freshwater pipeline, and one 3-10 inch HDPE or reinforced poly (150-1500 psi). Trench 2 for all phases would contain two multiphase gathering reinforced poly (750 psi-1500 psi) pipelines and one gas lift distribution reinforced poly (750 psi-1500 psi) pipeline (**Figure 2.3**). In general, pipelines in Phase 1B would tend to be larger than those in Phase 1C. Because of the number of pipelines in the various corridors, pipelines would be installed within two adjacent trenches, operated year round, and maintained in accordance with industry and government standards.

2.2.3 *Pre-construction Activities*

Prior to construction, EOG would use rubber tired vehicles to initially survey and flag the centerline of the proposed route, utilizing existing areas of disturbance (access roads, other pipelines, etc.) to the extent feasible (Phase 1A and most of Phase 1B have already been flagged). In those instances where topographic considerations make installation adjacent to existing disturbance impractical or environmentally deleterious, the proposed ROW may be displaced from the adjacent road or pipeline corridor (i.e. cross-country). Cross-country routing would follow existing surface pipeline ROWs, where feasible. In other instances, the final routing may place the pipeline corridor within the road (not within County roads) as feasibility considerations dictate. Installation of pipelines within a road is expected to be minimal and would be limited to areas of steep topography.

2.2.4 *Construction Activities*

<u>Pipelines</u>

The ROW would be cleared using a grader, dozer, or similar earth moving equipment. Vegetation removal would be minimized where possible. Scrub vegetation such as sagebrush, greasewood, grasses, etc., would be scalped and temporarily windrowed along the edge of the ROW. Scalping removes surface vegetation while allowing the root systems to remain in place thereby reducing potential erosion and allowing more successful revegetation. Preparation of the ROW on sloped terrain, such as along a contour, would include topsoil stripping and stock piling along the edge of the ROW. Sufficient cut would be made to provide a safe and level working

surface. All stream channel crossings would be constructed in accordance with BLM-approved crossing techniques (Fogg and Hadley 2007).

EOG would use backhoes or trenching machines (including rock saws, as required) to excavate a pipeline trench. The soil that is excavated during ditching operations would be temporarily stockpiled on the non-working side of the trench. Trenches will be backfilled in a timely manner, if possible, and soft plugs would be installed every 1/4 mile when the trench is left open overnight. In areas of near-surface bedrock, trench excavation would include use of a rock saw and/or blasting. A schematic illustrating the double trench layout is indicated in **Figure 2.1**.

The depth and width of the excavated trench would depend on local conditions. Standard excavation depths would be six to eight feet, with a minimal burial depth of five feet, where feasible. In areas of shallow bedrock, where the rock must be ripped, the minimum burial depth would be three feet and in areas of shot rock, the minimum burial depth would be 18 inches. Where the trench crosses dirt or gravel roads, the trench would be of sufficient depth to allow a six to eight feet minimal burial depth.

Standard pipeline construction techniques would be used during the project. Pipe would be brought to the installation sites on spools or in separate joints, depending on the type and size of pipe. Pipe would be strung along the excavated trench edge where they are accessible to construction personnel. Pipe segments would be welded together. All of the welds would be visually or radiographically inspected in accordance with with American Petroleum Institute (API) code 1103 and American Society of Mechanical Engineers (ASME) 31.8 code. The pipe assembly would be lowered into the trench by side-boom tractors. Individual pipeline segments would be placed side by side, or stacked vertically, with sandbags placed between to inhibit contact between the pipes.

The pipelines would be installed a minimum of six to eight feet deep under all roads and the utility corridor would be placed as close to the road as safely possible, but not within five feet of the edge of the road. When paralleling an existing pipeline corridor, the new pipeline corridor would be installed a minimum of 10 – 20 feet away from the existing pipeline ROW centerline. All construction equipment and vehicles would be confined to using existing roads and the ROW.

After installing the pipelines, the trench would be backfilled using spoils from the trench or, in rare cases, sand brought in from outside the Project Area. Spoil material would be backfilled with a backhoe or bladed equipment to within 1-1 1/2 feet of the top of the trench and would be compacted with two passes of a rubber tired tractor. The remaining spoil would then be put in the trench and wheel compacted once more. The remaining berm would not be higher than three inches above ground level after compaction. Extra compacting would be done at road crossings. Water bars would be placed according to BLM specification on slopes greater than 4% (BLM and USFS 2007). EOG would prepare as-built drawings for BLM following installation to indicate the number, size, and placement of the individual pipelines in each corridor.

The pipelines would be pressure tested hydrostatically, using air, gas, or water, according to applicable pipeline standards, prior to being placed in service. If water is used, the water to hydrostatically test the pipeline would be obtained from the Bonanza Power Plant water source. Water would be re-used to test the different pipelines within a common corridor. Testing of Phase 1, assuming separate volumes for phases 1A, 1B, and 1C, would require up to

approximately 40,000 bbls. of water. Water used to hydrostatically test the pipeline would be captured in tanks and disposed of at an authorized disposal site.

Construction dust would be controlled, as necessary, using water. Magnesium chloride would not be used at the request of grazing allotees, who have expressed concerns regarding possible negative impacts to local sheep herds.

Central Facilities

The project would include up to 14 central processing facilities located to optimize gathering and dispersal of the liquids, although only nine are definitely planned at this time (**Figure 1.1**). The exact locations and number of central facilities would be determined following completion of reservoir modeling and other studies and is not definitely known at this time. Each facility would be located immediately adjacent to existing roads within the natural gas field for the field life. There would not be interim reclamation of facility sites, with the exception of interim reclamation of any access roads from a construction ROW width of 50 feet to a life-of-project disturbance width of 18 feet. Installation approval would be authorized by sundry notice.

Facility access roads would be of minimal length, depending on final facility layout. At most, an access road of less than 1,500 feet in length would be required for any of the facilities. To accommodate safe truck traffic through the facilities, the access roads would be separate one-way ingress and egress without on-site turnarounds. Access road disturbance has been calculated using an assumed ROW width of 50 feet, which corresponds to a typical field road construction ROW. Final disturbed width for new roads, including any marginal drainage control structures, are typically 18 feet. Any such roads would be constructed to EOG's standards for existing field roads. New roads would be built and maintained to provide year-round access as necessary. Construction would utilize standard grading techniques as detailed in BLM Manual 9113 - Roads. Construction materials for access roads would consist of native borrow and soil accumulated during construction operations. Bulldozers, graders, and other heavy equipment would be used to construct and maintain the road system.

Each facility location and road, if applicable, would be cleared of vegetation using dozers or similar equipment and the site would be leveled. Cut-and-fill areas would be balanced to provide a level working surface and to facilitate retention of topsoil. Blasting could be required for excavations or leveling a facility site where bedrock is near the surface. Blasting would be conducted according to applicable safety standards.

Facilities would be constructed, to the extent feasible, on existing or expanded well pads. In some cases, new disturbance may be required for the entire facility. For purposes of analysis, each facility has been assumed to be a new pad disturbance. Each facility site would be up to approximately four acres in size. The facility would be graveled to provide year-round, all weather use and in production operated 24 hours daily, every day. Each facility would be equipped with automation and emergency shutdown valves, but will not be manned on a continuous basis. Gravel would be procured from an approved commercial source and trucked to the locations. Foundations for some of the production equipment could be made of concrete, depending on final facility design and local topographic and soil conditions. Portions of the site used for placement of liquids-bearing vessels would be surrounded by a berm or similar containment structure capable of capturing 110% of the volume of the largest vessel.

Each facility would be constructed by a crew of four to six workers accessing the location using an average of three light trucks. An average of four pieces of heavy equipment (i.e., bulldozers and motor graders), delivered individually on tractor trailer trucks, would be used to perform the earth-moving operations. Completion of the site construction, including the road, would be expected to require 21-30 days. Dust would be controlled, as necessary, using sprayed, recycled water from the Bonanza power plant.

Following construction of the site, production equipment would be brought to the facility location. Production equipment would be delivered on heavy trucks, either in a completed state or in parts requiring assembly, depending on the type of equipment. Other vehicles would include pickups used by the workers. The precise numbers of vehicles and workers involved in this phase of facility installation are undetermined at this time.

2.2.5 *Operations and Maintenance*

Pipelines and Well Sites

Once the wellhead gathering pipelines are installed, produced water and oil storage tanks and VOC combustors currently on the well locations will be moved to the central facilities. One 400-bbl tank would be left on each Mesaverde well pad. An additional tank, of up to 400-bbl volume, would also be left on all well pads containing a Wasatch well, for a maximum of two tanks per well pad following LGS installation.

Surplus tanks may not be immediately removed, but would be relocated over time. Tanks would be relocated to other existing or future locations, or to storage yards, as applicable. Tanks would be relocated as equipment and personnel become available from higher priority tasks. A three-phase separator would remain on each well pad to measure fluid volumes and separate the gas stream, prior to recombining the gas, oil, and produced water for transport in the LGS. All of the well site production equipment would be equipped with low-bleed valves to reduce air pollutant emissions.

Data provided by EOG indicate that produced oil volumes to be transported by the LGS from existing wells are estimated to be up to approximately 1,200 bbls daily. Volumes from approved and proposed wells would be proportionally larger, depending on development rates. Volumes of fresh water transported from the Bonanza Freshwater Ponds for use in field drilling and production activities would vary with drilling activity levels.

Pipeline ROWs would be monitored visually periodically, as necessary, and pressures monitored, to check for leaks or other operational defects. Pipelines would be regularly pigged for cleaning, as necessary.

Central Facilities

A schematic of the layout of a typical central facility is included as **Figure 2.2** Each central facility would include four different operational functions:

1. Oil treating and auxiliary equipment operation - This function would involve primarily separation of oil from other produced fluids, oil measurement, and operation of the facility electrical source. Typical equipment would include:
   - One electrical equipment house;
   - One electrical generator;
   - One direct heat trace heater;

- One primary oil heater treater (PHT);
- One recycle oil heater treater (RHT; and
- One free water knockout (FWKO).

2. On-site tankage and vapor recovery - This function would involve storage of oil, produced water, and potentially freshwater. It would also provide for recovery or destruction of tank-associated vapors and gaseous emissions and would be the oil sales point. Typical equipment would include:
   - Two 400 bbl. oil tanks;
   - Four 400 bbl. produced water tanks;
   - One 400 bbl. relief tank;
   - Two vapor recovery towers (VRTs) for oil and water;
   - One vapor recovery unit (VRU);
   - One combustor; and
   - One lease automated custody transfer (LACT).
3. Gas separation and H_2S removal - This function would involve additional gas/liquid separation and equipment designed to remove hydrogen sulfide from the gas stream. Typical equipment would include:
   - One two-phase vertical separator (2P);
   - One slug catcher;
   - One indirect heater;
   - Two coalescing filters;
   - One H_2S skid; and
   - One chemical (H_2S scavenger) storage.
4. Gas dehydration and compression - This function would involve removal of water liquid and vapors from the gas stream, gas volume measurement, and compression of some portion of the gas stream for return transport to the well sites for use in gas lift pressure maintenance. Typical equipment would include:
   - One glycol dehydration unit for sales gas;
   - One glycol dehydration unit for gas lift gas;
   - One coalescing filter;
   - One fuel gas meter;
   - One gas purchase meter; and
   - Up to four compressors for gas lift operations.

Operations at the central facilities would involve a number of processes. Steps in the production process are graphically illustrated in **Figure 2.3**.

<u>Gas Processing</u> - Combined liquids (produced water/gas/oil) would arrive from the field and undergo initial two-phase separation into water/oil and gas streams. The gas stream would be routed to the slug catcher, which would further remove liquids from the gas stream. Separated liquids would be routed back to the liquids processing side for further separation. The gas would next pass through the indirect heater, which would heat the gas to a specified temperature to maximize efficient removal of H_2S during passage through the H_2S scavenger skid. Prior to insertion into the H2S scavenger, the gas stream would pass through a filter to remove remaining liquids or possibly contained solid particles.

Following removal of any H_2S, the gas stream would be separated into two streams with different destinations. Gas intended for use in gas lift pressure maintenance operations would pass through another filter and would then be sent to a compressor to raise the gas pressures to that suitable for gas lift support system transport. From the compressor, the gas would pass through another filter, through a high pressure dehydration unit, to remove any remaining water, and into the gas lift support system pipelines for transport back to the wellheads. The gas would be measured prior to being sent back through the gas lift support system.

Gas intended for sales would exit the H_2S scavenger skid and pass through a filter. The stream would then be sent through a low pressure dehydration unit and from there into one of the field gathering pipelines operated by QEP for sales. The gas would be measured prior to being sent into the QEP gathering pipeline.

Liquids Processing - Following passage through the two-phase separator, liquids would be processed through a free water knockout (FWKO) unit. The FWKO separates produced water, oil, and any gas remaining in the input fluid. The oil would be sent to the primary heater treater for breakdown of oil-water emulsions. From the heater treaters, the oil would be sent to the oil vapor recovery tower (VRT). The VRT separation vessels operate at close to atmospheric pressure (one to five psi), which reduces flash emissions and captures more product for sale. Gas from the oil VRT, would be sent to a vapor recovery unit (VRU), which is used to capture gas from the VRTs, and then to a sales pipeline, to the gas lift support transport system, or, in limited circumstances, to an on-site combustor.

Following passage through the VRTs, the oil would be stored in one of the two oil tanks. Any oil sent to the oil tanks, which was determined to still contain unacceptable levels of water, would be sent back to the recycle heater treater for additional fluid separation. From the storage tanks, oil would then be sent to a lease automated custody transfer (LACT) unit which monitors the fluid and would either send it back to the heater-treaters for further processing or would route it to truck sales. A relief tank is provided which would be used infrequently to accommodate overflow from process vessels (slugcatcher, 2-phase separator, and FWKO) experiencing overpressure.

Produced water returned from both the FWKO and the primary or recycle heater treaters would be routed either directly to the water disposal pipeline for transport to an injection well, or sent to the water VRT to capture any remaining gases and then to one of a number of produced water tanks. Water from the produced water tanks would be sent to the water disposal pipeline for injection well disposal. Ponds in the field used for water disposal in prior years are being closed and reclaimed as EOG switches to complete injection disposal to reduce air quality impacts. Ultimately, one unused pond will be left in place at each of the Red Wash and Coyote Wash evaporation pond facilities. These ponds would only be used for produced water disposal on a temporary emergency basis.

Liquids transport through above ground pipelines at the central facilities would be heated by the direct heater/heat trace equipment to prevent freezing during cold weather.

Gas would be flared only during equipment upsets or malfunctions or similar events downstream, such as at the compressor stations operated by Questar. Flaring would be a contingency operation which would be used only when necessary to protect people and equipment.

All of the production equipment at the central facilities would initially be gas powered until it is feasible to bring electric lines into the field. Alternately, EOG may utilize a gas-fired generator to power the facilities on an interim basis. The central facilities are expected to be electrically powered within a few years of project approval.

2.2.6 *Schedule*

EOG intends to begin construction of the LGS Phase 1 in 2012. Construction is anticipated to commence as soon as feasible following project approval and continue for a period estimated to last up to five years. However, construction timing is dependent on approval of site specific land use applications.

2.2.7 *Reclamation and Abandonment*

Pipelines

Final reclamation of pipeline corridors would commence as soon as feasible following pipeline installation. Reclamation would include restoring those portions of the ROW to approximate the original contour and redistributing the topsoil prior to reseeding. Erosion control structures such as water bars would be constructed in accordance with procedures contained within *Surface Operating Standards and Guidelines for Oil and Gas Exploration and Development ("Gold Book"*) (BLM and USFS 2007). Water bars would start and end at least five feet into undisturbed soil, but wholly within the disturbance ROW. Previously windrowed vegetation would be distributed as evenly as possible across the disturbed ROW to provide a more suitable seedbed and to enhance revegetation efforts.

Re-seeding of disturbed areas would use a seed mix, application timing, and application method approved by the BLM Authorizing Officer. All disturbed areas would be seeded using a drill equipped with a depth regulator. All seed would be drilled on the contour and would be planted between one-quarter and one-half inch deep. Where drilling is not possible (i.e., excessively steep or rocky terrain), the seed would be broadcast and the area raked or chained to cover the seed. If the seed mixture is broadcast, the application rate would be double that used for the drill seeder.

Existing Multi-Well Pads:

Preliminary reclamation would be implemented for those locations in which not all planned wells have yet been drilled and completed. On these well pads, stockpiled top soil would be spread and re-seeded over pad areas outside the primary truck turn arounds. Interim reclamation would be conducted for those locations on which all planned wells have been drilled and completed. In these cases, recontouring may occur outside of the following minimum requirements and spacings:

- A 110-foot clearance from any existing wellhead;
- A distance of approximately 60 feet remaining un-contoured from any existing berm that is used for containment; and
- A distance of approximately 60 feet remaining un-contoured from any permanent piece of equipment on location.

Any fire vessel must be located 100 feet from an existing wellhead and storage tank. Fired vessels and storage tanks are almost always set on the cut side of location. Deadman anchors and/or safety anchors (Geronimo line anchors), both temporary and permanent may need to be

located in reclaimed and/or re-vegetated areas for safety reasons. Additionally, vehicle traffic may also need to travel into these areas during periods of workover activity on a well or other temporary activities.

Central Facilities

Reclamation of the central facilities (other than access roads) would not occur until the end of production life. All production equipment and fencing would be removed. Gravel surfacing and any concrete foundations for the production equipment would be removed and disposed of at an appropriate approved disposal facility. The facility site would be recontoured, as needed, to approximate the original topography. The in-place or re-spread topsoil could be prepared, such as by discing or chiseling, to discourage erosion and promote water infiltration, as necessary, prior to seeding. Seeding efforts would be performed in the same manner as that indicated for pipeline reclamation.

Reclamation efforts would be completed in accordance with EOG's reclamation plan approved October 19, 2009 and in conformance with BLM's Green River District Reclamation Guidelines . Prior to abandoning the facilities, EOG would submit a Plan of Abandonment to the Authorized Officer for approval.

2.2.8 *Applicant-committed Design Features*

Air Quality

The project is designed as an air quality emissions reduction project.

All production equipment at well sites and at the central facilities will be fitted with low-bleed or electric valves.

Use of tanks at well pads will be essentially eliminated for Mesaverde wells thereby eliminating tank flash gas from these wells, except for one tank on most pads which may used for emergencies or blowdowns.

Central facility tank flash gas will be minimized through the use of a vapor recovery tower/vapor recovery unit system and combustors. Central facilities will be electrically powered within two years of construction.

Truck traffic will be reduced (currently estimated at elimination of up to approximately 34,000 truck trips per year, and there will be essentially no trucking from future Mesaverde wells drilled on existing pads) during the production phase.

Equipment to be removed from existing wells connected to the LGS will include dehydrators, fired separators. Non-fired separators may continue to be used for fluids measurement purposes. All pumps will be electrified or removed from the well site. Truck loading of liquids will be eliminated from LGS-connected wells.

Soils

All construction and maintenance activities will cease if soils or road surfaces become saturated to the extent that construction equipment is unable to stay with the ROW, and before activities cause irreparable harm to roads, soils or excessive siltation of nearby lakes, reservoirs, or live flowing streams.

Sensitive Species

Biological surveys have been completed for all of Phase 1A and most of Phase 1B. EOG would conduct all necessary biological surveys for the remaining phases prior to site-specific approval of the pieces of those phases.

Biological field surveys were conducted to identify any potential habitat of the federally listed cactus species *Sclerocactus wetlandicus* for all of Phase 1A and most of Phase 1B. No populations of the species are present in the Project Area. EOG would conduct all necessary *Sclerocactus wetlandicus* for the remaining phases prior to site specific approval of the pieces of those phases.

Invasive Species

EOG will comply with the applicable federal and state laws and regulations concerning the use of pesticides (i.e, insecticides, herbicides, fungicides, rodenticide, and other similar substances) in all activities or operations.

Weeds will be controlled on disturbed areas within the exterior limits of the pipeline ROW. The control methods shall be in accordance with guidelines established by the EPA, BLM, state, and local authorities. Approval will be obtained from the Authorized Officer prior to use of pesticides.

Visual Resources

Permanent above ground structures not subject to safety considerations will be painted a color to minimize visual contrast with the surrounding landscape as specified by BLM (probably Carlsbad Canyon).

The Project Area is not within two miles of the Fantasy Canyon Special Recreation Management Area (SRMA), whose fragile rock formations could be damaged by ground tremors.

Archaeological and Paleontological Resources

Class I and III cultural resource inventories have been conducted for all of Phase 1A and most of Phase 1B areas of potential effect.

For the remaining phases, EOG would conduct all necessary Class I and III cultural resource inventories within the areas of potential effect prior to site specific approval of the pieces of those phases. In all feasible cases, eligible cultural resources would be avoided.

Paleontological surveys have also been completed for all of Phase 1A and most of Phase 1B.

EOG would conduct all necessary paleontological surveys for the remaining phases prior to site-specific approval of the pieces of those phases.

If, in the course of its operations, EOG discovers any cultural remains, monument sites or any object or antiquity subject to the Antiquities Act of June 8, 1906, or Archaeological Resources Protection Act of 1979, the holder shall immediately cease activity and report directly to the responsible Authorized Officer.

Monitoring of all bedrock excavations will be performed by a qualified paleontologist.

Health and Safety

All safety measures have been considered in the design, construction, operation, and maintenance of the facility. EOG will have a designated representative present during construction. Any accidents to persons or property on federal lands will immediately be reported to the Authorized Officer.

Waste Materials

Construction sites will be maintained in a sanitary condition at all times; waste materials generated by construction crews at those sites shall be disposed of promptly at an appropriate waste disposal site. “Waste” means all discarded matter including human waste, trash, garbage, refuse, oil drums, petroleum products, ashes and equipment.

Notification

EOG will contact the Authorized Officer at least 48 hours prior to the anticipated start of construction and/or any surface disturbing activities.

2.3 Alternative B - No Action

Under this alternative, EOG's proposal would be denied. There would be no surface disturbance resulting from construction and installation of the proposed pipelines or the central facilities. The reductions in current field air emissions resulting from implementation of the Proposed Action would not be realized. Management of the Project Area public lands would continue as previously.

3 AFFECTED ENVIRONMENT

3.1 Introduction

This chapter presents the potentially affected existing environment (i.e., the physical, biological, social, and economic values and resources) of the impact area as identified in the Interdisciplinary Team Checklist found in **Appendix A** and presented in **Chapter 1** of this assessment. This chapter provides the baseline for comparison of impacts/consequences described in **Chapter 4**.

3.2 General Setting

The Project Area is located within the east-central portion of the Uinta Basin geologic and physiographic subdivision of the Colorado Plateau Physiographic Province (Stokes 1977). The climate in the vicinity of the Project Area is characterized as arid, with cold winters and hot summers. Annual precipitation (rainfall and snowfall) in the region ranges from 8 to 10 inches (WRCC 2012). Terrain near the Project Area consists of a moderately dissected upland situated between westerly flowing streams, Coyote Wash on the north and the White River to the southwest. Elevations range from approximately 4,700 feet where the White River makes its closest approach to the Project Area, to 5,600 feet in the southeastern portion (**Figure 1.1**). Canyon wall slopes may exceed 75 percent with numerous vertical cliffs and relief of up to 200 feet. The floodplain of the White River is well developed and varies from approximately 500 to 2,500 feet wide near the Project Area. None of the proposed project facilities cross either the White River or Coyote Wash.

Vegetation in the area is typical of eastern Utah arid lands, consisting dominantly of either salt desert shrub or sagebrush communities, with subsidiary grassland, cliff/canyon, and badlands communities. The proposed project is located within an area extensively disturbed by oil and gas development.

3.3 Resources/Issues Brought Forward for Analysis

Based upon evaluation of the proposed project, the members of the ID Team determined which resources or issues would potentially be affected by project implementation and which were either not present in the area or would not likely be affected. The rationale for the determination of which resources are analyzed in this document is included as **Appendix A**.

3.3.1 *Air Quality and Climate*

Air quality within the Project Area has the potential to be affected by such activities as emissions from the construction and operation of oil and gas facilities, access roads, and other elements of the proposed project.

Regional Climate

The climate in the vicinity of the Project Area is characterized as arid, with cold winters and hot summers. Annual precipitation (rainfall and snowfall) in the region ranges from 8 to 10 inches. A climate summary for Vernal, Utah, is presented in **Table 3.1**.

Table 3.1 Monthly Climate Summary, Vernal Airport, Utah

	Jan	Feb	Mar	Apr	May	Jun	Jul	Aug	Sep	Oct	Nov	Dec	Annual
Average Temperature Max. (F)	29.2	36.9	49.9	62.2	72.3	82.5	89.1	86.7	77.4	63.6	46.9	32.3	60.8
Average Temperature Min. (F)	4.9	11.0	22.4	31.0	39.0	46.4	52.3	50.5	41.6	31.2	20.5	9.0	30.0
Average Precipitation Total (in.)	0.5	0.5	0.7	0.8	0.9	0.7	0.6	0.7	0.9	1.1	0.6	0.6	8.45
Average Snow Fall Total (in.)	5.3	3.6	2.2	0.4	0.0	0.0	0.0	0.0	0.0	0.3	1.3	5.4	18.5
Average Snow Depth (in.)	2.0	2.0	1.0	0.0	0.0	0.0	0.0	0.0	0.0	0.0	0.0	1.0	0.0

Source: WRCC 2012

Period of Record : 11/1/1894 to 12/31/2011
Percent of possible observations for period of record.
Max. Temp.: 97.4% Min. Temp.: 97.2% Precipitation: 97.9% Snowfall: 85.4% Snow Depth: 79.8%

The latitude of the proposed project is within the belt of prevailing westerly winds that circle the globe around the earth's northern hemisphere. However, the project site is located in complex terrain where the winds are affected by local topographic features. Because of the typically dry atmosphere, bright sunny days and clear nights frequently occur. This in turn allows rapid heating

of the ground surface during daylight hours and rapid cooling at night. Since heated air rises, and cooled air sinks, winds tend to blow uphill during the daytime and down slope at night. During the winter, atmospheric inversions, in which low-level cold air does not mix with upper-level warm air, are common.

Air pollutant dispersion in the Project Area also is dependent on wind direction and speed. Although wind direction can often be highly influenced by the local terrain, the wind direction in Vernal tends to be westerly (WRCC 2012).

Air Quality Standards

The National Ambient Air Quality Standards (NAAQS) are maximum levels for certain pollutants set by EPA based on health criteria ("criteria pollutants") under terms of the Clean Air Act (40 CFR Part 50). Utah has developed its own set of standards (UAAQS), which generally equate to the NAAQS.

In addition, the Clean Air Act mandates limitations on certain emissions above established baseline levels under the Prevention of Significant Deterioration (PSD) program. PSD regulations apply to proposed new or modified sources located in an attainment area that have the potential to emit criteria pollutants in excess of predetermined de minimis values (40 CFR Part 51). PSD Class I areas are assigned to federally protected wilderness areas (i.e., national parks) and allow the lowest amount of permissible deterioration. Class II areas are designed to allow for moderate, controlled growth, and Class III areas allow for heavy industrial use.

Areas which are in compliance with the NAAQS are termed "attainment" areas, and all of the Uinta Basin is currently considered an unclassified/attainment area (UDAQ 2011). During 2011, the Air Quality Index for Uintah County was "good" or "moderate" 93% of the time. During nine days of the year, air pollutant levels were considered "unhealthy" or "very unhealthy." The air pollutant of concern on the highest level days was ozone (EPA 2011).

A summary of the NAAQS and UAAQS standards, PDS increments, and estimated ambient background levels for criteria pollutants in the vicinity of the Project Area is indicated in **Table 3-2**.

Table 3.2 Criteria Pollutant Standards, PDS Increments, and Ambient Air Quality

Pollutant	National and Utah Ambient Air Quality Standards (NAAQS[1] and UAAQS[2])		PSD Increment[3]		Estimated Background Concentrations[4]
	Concentration	Averaging Time	Class I	Class II	
Carbon Monoxide (CO)	9,000 ppb 10,000 µg/m^3	8-hour	n/a	n/a	4,236 µg/m^3
	35,000 ppb 40,000 µg/m^3	1-hour	n/a	n/a	6,984 µg/m^3
Lead (Pb)	0.15 µg/m^3	Rolling 3-month Average	n/a	n/a	
Nitrogen Dioxide (NO_2)	53 ppb	Annual	2.5 µg/m^3	25 µg/m^3	10 µg/m^3
	100 ppb	1-hour	n/a	n/a	
Particulate Matter (PM_{10})[5]	150 µg/m^3	24-hour	8 µg/m^3	30 µg/m^3	28 µg/m^3
Particulate Matter ($PM_{2.5}$)[6]	15.0 µg/m^3	Annual	n/a	n/a	
	35 µg/m^3	24-hour	n/a	n/a	
Ozone (O_3)	75 ppb	8-hour	n/a	n/a	67 ppb[7]
Sulfur Dioxide (SO_2)	75 ppb	1-hour	n/a	n/a	12 ppb
Secondary Standard	500 ppb	3-hour	25 µg/m^3	512 µg/m^3	20 µg/m^3

Source: EPA 2012

[1] EPA NAAQS http://www.epa.gov/air/criteria.html

[2] UAAQS from Utah Division of Air Quality Annual Report 2011

[3] 40 CFR 51.166

[4] Estimates from 2008 Vernal proposed RMP and Final EIS

[5] Particulate matter less than 10 microns in effective diameter

[6] Particulate matter less than 2.5 microns in effective diameter

[7] 2007-2008 Dinosaur National Monument 4th max values

Criteria Pollutants

The Project Area is located in the eastern portion of the Uinta Basin, comprised largely of Uintah and Duchesne counties. Principal air pollution sources include emissions from motor vehicles, oil and gas development, coal-fired power plants, and sand and gravel operations. Principal facility sources of criteria pollutants in Duchesne and Uintah counties, and the estimated amounts emitted in 2002, are indicated in **Table 3.3**.

Table 3.3 2002 Principal Source Facility Criteria Pollutant Emissions

Pollutant Emissions (tpy)							Facility	Industry SIC
CO	NH_3	NO_X	PM_{10}	$PM_{2.5}$	SO_2	VOC		
Uintah County								
523	31.4	6,712	681	563	981	62.8	Bonanza Power Plant	4911 - Electric Services
7.08		8.24	0.04	0.04		1.42	Federal Well #33-7-L	1311 - Crude Petroleum & Natural Gas
7.08		8.24	0.04	0.04		1.29	Federal Well #33-8-N	1311 - Crude Petroleum & Natural Gas
2.48		5.49	1.33	0.39	0.4	0.53	Vernal Asphalt Plant	1442 - Construction Sand And Gravel
1.49		2.82	61.5	14.7	0.2	69.2	Vernal Phosphate Operations	1475 - Phosphate Rock
Duchesne County								
242		148	0.72	0.68		93.2	Altamont Main Gas Processing Plant	1311 - Crude Petroleum & Natural Gas
227		172	0.79	0.62		35.9	Bluebell Gas Plant	1311 - Crude Petroleum & Natural Gas
158		149	1.11	1.08		61.1	Altamont South Compressor Station	1311 - Crude Petroleum & Natural Gas
107		109	0.85	0.65		60.3	Altamont East Compressor Station	1311 - Crude Petroleum & Natural Gas
42		25	0.11	0.11		44.7	Altamont West Compressor Station	1311 - Crude Petroleum & Natural Gas

Source: EPA 2009.

Oil and Gas Emissions - Industrial operations in the Uinta Basin are dominated by oil and gas development. An estimate of total emissions from oil and gas operations in the Uinta Basin for 2012 is indicated in **Table 3.4**. The indicated values are projections from the emissions inventory conducted by the Western Regional Air Partnership (WRAP) for 2006 (ENVIRON 2009).

Table 3.4 Estimate of 2012 Emissions from Oil and Gas Operations in Uinta Basin (tons/yr)

County	NO_X	VOCs	CO	SO_x	PM
Carbon	1,351	3,977	1,296	2	50
Duchesne	5,352	35,410	29,756	5	208
Emery	259	559	246	0	10
Grand	736	2,984	687	1	26
Uintah	8,849	84,564	12,940	16	337
Total	**16,547**	**127,495**	**44,925**	**24**	**631**

Ozone - In recent years, ozone pollution has become an increasing concern in oil and gas development areas in the western U.S. Ozone is formed by photochemical reactions among various nitrogen oxides (NO_x) and volatile organic compounds (VOCs), both of which may be produced from oil and gas exploration and production operations, as well as from other sources. In particular, periods of winter inversions have exhibited elevated ozone, including levels exceeding the NAAQS standard. In 2011, seven ozone monitors were operating in the Uinta Basin, with observations summarized in **Table 3.5**. As of 2011, all of Utah was formally in attainment or unclassified with respect to the ozone standard, although Davis and Salt Lake counties, outside the Uinta Basin, are maintenance areas which were previously evaluated as non-attainment (UDAQ 2011). The Uinta Basin is evaluated as unclassifiable for ozone.

Table 3.5 2011 Uinta Basin Ozone Monitor Values, 8-hour Averaging

County	Address	Site ID	Fourth Max (ppm)	Actual Exceedances
Duchesne	Little Mountain	490130003	0.059	0
Duchesne	1/4 Mile South Of Us 40 Off 4500 West Fruitland, Utah	490131001	0.065	0
Duchesne	6000 South And 10000 West (Myton)	490137011	0.111	19
Uintah	Dinosaur National Monument	490471002	0.090	8
Uintah	2 Miles West Of Redwash Atop Deadman's Bench	490472002	0.100	21
Uintah	2 Miles South Of Ouray And South Of The White And Green River Confluence	490472003	0.116	22
Uintah	Whiterocks & County Road	490477022	0.068	2

Source: EPA AirData website

The recent high levels of winter ozone in the Uinta Basin suggest the potential for the Basin to become a formal non-attainment area in the future.

Hazardous Air Pollutants

Hazardous air pollutants (HAPs) are those pollutants known or suspected to cause cancer or other serious health effects (i.e., reproductive effects or birth defects) or adverse environmental impacts. The USEPA has classified 188 air pollutants as HAPs. Examples of listed HAPs associated with the oil and gas industry include formaldehyde, benzene, toluene, ethylbenzene and xylenes compounds, and normal hexane (n-hexane). Existing sources of HAPs in the Uinta Basin include compressors (benzene, ethylbenzene, formaldehyde, toluene, and xylenes) and glycol dehydrators (benzene, toluene, ethyl benzene, hydrogen sulfide, and xylenes).

Principal facility sources of hazardous air pollutants in Uinta Basin, and the estimated amounts emitted in 2002, are indicated in **Table 3.6**.

Table 3.6 2002 Principal Source Facility Hazardous Air Pollutant Emissions

Facility	Pollutant Emissions (pounds/year)					
	Benzene	Ethylbenzene	Formaldehyde	Hexane	Toluene	Xylenes (Mixed Isomers)
Uintah County						
Bonanza Power Plant	2,720	197	507	140	502	77.4
Vernal Asphalt Plant	17.9	0	53.8	0	0	0
Vernal Phosphate Operations	0.0002	22.7	0.0069	12.3	277	140
Total 2	**,738**	**219**	**561**	**152**	**779**	**218**
Duchesne County						
Altamont South Compressor Station	23,915		0.0052	2,840	3,290	
Altamont East Compressor Station	9,980		0.0052	2,684	1,215	
Altamont West Compressor Station	5,256		0.0014	2,669	288	
Bluebell Gas Plant	1,913		3,478	134	33	
Altamont Main Gas Processing Plant	446		0.0624	20	8	
Total 41	**,510**		**3,478**	**8,347**	**4,834**	

Source: USEPA 2009.

Air Quality Related Values

With respect to PSD, all of the Project Area and its vicinity are considered Class II, and there are no Class I areas located within 60 miles of the Project Area. Dinosaur National Monument and the High Uintas Wilderness in the Ashley National Forest (approximately 30 miles northeast and 50 miles northwest of the Project Area, respectively) are Class II sensitive areas (UAQB 2006). The PSD Class I and II increments (**Table 3-2**) are evaluated to determine levels of concern and do not represent a PSD increment consumption analysis which would be required under air permitting regulations.

In addition to incremental increases in criteria pollutant emissions, the PSD program monitors changes in air quality-related values (AQRV), including impacts to visibility and regional haze and reductions in the acid neutralizing capacity of sensitive receptors. Visibility monitoring is performed by the Interagency Monitoring of Protected Visual Environments (IMPROVE) Program. The closest IMPROVE monitor to the Project Area are is at Arches National Park, approximately 90 miles south of the Project Area (IMPROVE 2012). A standard annual visual range of approximately 250 km (155 miles) has been calculated for Canyonlands and Arches national parks and the Flat Tops Wilderness areas using data from the Federal Land Manager's Air Group (FLAG) Phase I report (FLAG 2000, pgs. 46-48).

The transfer of air pollutants to terrestrial or aquatic surfaces comprises atmospheric deposition, reported as the rate of mass deposited per given area (kg/ha/year). Pollutants are removed by both wet (precipitation) and dry (gravitational settling and surface adherence of gaseous

pollutants) depositional processes. The deposition of acids, such as sulfuric acid (H_2SO_4) and nitric acid (HNO_3) is of particular concern. Acid deposition occurs when SO_2 and NO_x emissions are transformed in the atmosphere and returned to the surface. Wet deposition is monitored by the cooperative National Atmospheric Deposition Program (NADAP) The closest NADAP monitor to the Project Area is operating at Green River, Utah, approximately 80 miles to the southwest. Nitrate deposition at Green River has been generally consistent from 1990-2009 at around 2 kg/ha/yr. Sulfate deposition has shown a decrease from around 2 kg/ha/yr to around 1 kg/ha/yr (NADP 2012).

Dry deposition is monitored by the EPA's Clean Air Status and Trends Network (CASTNET). The nearest monitor is located at Canyonlands National Park, approximately 120 miles to the south southwest. Total nitrogen deposition since 1995 has been fairly consistent at around 2 kg/ha/yr. Total sulfur deposition has been between 0.5 and 1.0 kg/ha/yr. (CASTNET 2012).

Greenhouse Gases and Climate Change

Certain atmospheric components including water vapor, carbon dioxide (CO_2), nitrous oxide (N_2O) and methane (CH_4) have the ability to act as "greenhouse gases" (GHGs) by absorbing incident solar radiation reflected from the ground and increasing ambient air temperature. Water vapor is the most important greenhouse gas. Anthropogenic deforestation and industrial processes in the last 200 years have increased emissions of GHGs, particularly CO_2, such that the atmospheric concentration of CO_2 has increased by 35% in the last 150 years to approximately 379 parts per million (ppm). Observed average temperature increases in various parts of the world have been contemporaneous with increased GHG concentrations in the atmosphere. Governmental initiatives to control GHG emissions have resulted from this observed trend and from future projections of this trend continuing as indicated by certain computer climate projection models (IPCC, 2007). In the U.S., the primary source of anthropogenic greenhouse gas emission is fossil fuel combustion. Fossil fuels are responsible for supplying approximately 85% of U.S. primary energy needs and approximately 98% percent of estimated anthropogenic CO_2 emissions (EIA, 2008).

3.3.2 *Cultural Resources*

Cultural resources are those aspects of the physical environment that relate to human culture, society, and cultural institutions that hold communities together and link them to their surroundings. Cultural resources include prehistoric and historic sites, and sites which combine both prehistoric and historic components. Cultural resource sites are the remains of past activities indicating use or modification of the environment by humans. Regulations preserving cultural resources result from a number of federal laws, including the National Historic Preservation Act of 1966, as amended (NHPA), the Archaeological Resources Protection Act of 1974, as amended (ARPA), and Executive Order 11593 (Protection and Enhancement of the Cultural Environment). The NHPA established the National Register of Historic Places (NRHP) and provides for the process by which eligibility for the NRHP is determined under Section 106 of the Act. Activities which would result in surface disturbance of the public lands typically require that field surveys (Class III inventories) be conducted to identify cultural sites which may require preservation under terms of the NHPA.

Cultural resource inventories have been conducted within the Natural Buttes gas field during the course of its development as a result of ongoing disturbance of the surface. As part of the analysis for the Chapita Wells/Stagecoach Natural Gas Development Project EIS (BLM 2008b),

and the in-progress Greater Chapita Wells Natural Gas Infill Project EIS, both of which overlap the Project Area, reviews have been completed of prior cultural inventories covering the areas affected by the respective projects. Additional inventories have also been conducted in support of the Proposed Action (DelBozque 2011). These inventories have typically comprised block surveys of complete sections and have covered both federal and State of Utah public lands.

As of November 2011, at least 84% of the sections overlapping the Project Area have been block-inventoried to Class III standards and documented in various cultural resource inventory reports. A total of 99 sites have been recorded, of which 26 have been recommended for NRHP eligibility. The sites have been determined to contain historic, prehistoric, and multi-component elements.

3.3.3 *Fish and Wildlife Excluding USFWS Designated Species*

Wildlife within the Project Area are typical of those inhabiting salt desert shrub and sagebrush communities, which comprise approximately 87% of the non-developed surface in the vicinity. Wildlife species may utilize several different habitat types or vegetation communities in different seasons or throughout their life cycles.

Many common wildlife species are widespread throughout the region where suitable habitats are present. Small mammals that occur in the Project Area include shrews, mice, rats, ground squirrels, cottontail rabbits, badger, coyote, fox, and bats. Reptile species including sagebrush lizard, cornsnake, midget faded rattlesnake, gopher snake, and greater short-horned lizard are locally abundant and occur throughout the Project Area. Although many of these species are distributed throughout the Project Area, the density and diversity of species increases with proximity to White River riparian habitats (BLM 2008b). In particular, amphibians are dependent upon very limited aquatic resources within the Project Area. Because amphibian species tend to achieve high densities only within aquatic environments, they are likely to be uncommon or absent over most of the Project Area, since it does not overlap wetland or riparian vegetation communities.

<u>Big Game</u>

Big game species found in or near the Project Area include pronghorn antelope (*Antilocapra americana*), mule deer (*Odocoileus hemionus*), and Rocky Mountain bighorn sheep (*Ovis canadensis*). Habitat mapping by the Utah Division of Wildlife Resources (UDWR) indicates that habitat suitable for pronghorn covers almost the entire Project Area, with the exception of extreme western portions of Phase 1C of the proposed project. The UDWR has evaluated this habitat as crucial and occupied year-long. Crucial habitat is that on which the local population of a wildlife species depends for survival because there are no suitable alternative ranges or habitats available. Crucial value habitat is essential to the life history requirements of a wildlife species. Degradation or unavailability of crucial habitat will lead to declines in carrying capacity and/or numbers of wildlife species in question. The UDWR has also indicated that pronghorn utilize the vicinity of the Project Area for fawning (UDWR 2011).

Crucial year-long mule deer general and fawning habitat are located along the White River immediately west of the Project Area. UDWR habitat mapping indicates an overlap of this range with a very small portion of the extreme western portion of Phase 1C of the proposed project, less than 1% of the Project Area. Although the UDWR mapping overlaps this portion of the Project Area, the coincidence of mule deer habitat with the area topographically within or

adjacent to the White River floodplain suggests that mule deer range would not normally overlap the Project Area, which is situated on flats above the floodplain. Crucial year-long Rocky Mountain bighorn sheep habitat has been mapped along the White River corridor by UDWR and, similar to the mule deer habitat, overlaps a small portion of Phase 1C of the proposed project, approximately 4% of the Project Area.

White-tailed Prairie Dog

The white-tailed prairie dog (*Cynomys leucurus*) is listed as a wildlife species of concern by the State of Utah (UDWR 2012a). This species is the main food source of the endangered black-footed ferret (Fitzgerald *et al*. 1994). GIS mapping by the VFO has identified prairie dog colonies within one to two miles of the northeastern extremity of the Project Area. No mapped colonies have been identified within the Project Area, although the VFO considers all of Township 9S, Range 23E as potential prairie dog habitat.

Burrowing Owl

The burrowing owl (*Athene cunicularia*) is listed as a wildlife species of concern by the State of Utah. This species inhabits level, open, and dry or desert vegetation with available burrows (Johnsgard 2002). The nest is in a mammal burrow, usually that of a prairie dog, ground squirrel, badger, or armadillo; if a mammal burrow is not available the owls will sometimes excavate their own nest burrow (UDWR 2012b, Bosworth 2003). Because identified prairie dog habitat, although no actual colonies, overlaps the Project Area, there is the potential for the occurrence of the species within the vicinity.

3.3.4 *Soils*

Soils Characterization

Soils within the gathering system Project Area have developed on a variety of land surfaces remaining after the differential erosion of plateau surfaces of the gently dipping strata of the underlying Uinta Formation (Leishman et al. 2003). The soils within the proposed Project Area are subdivided, mapped, and described as four soil mapping units (**Table 3.7**). The four soil map units are composed of three base soils classification units or series that singularly or in combination with another of the three soil series (a soil complex or soil association) make up the four map units. All soils are well drained and are low in organic matter content. Approximately 12% of the soils within the Project Area have been previously disturbed and reclaimed and/or are currently occupied by developed facilities including roads, well pads, and other operational structures.

The upland, shallow, and rocky Cadrina soils occupy hill tops and hillsides with slopes ranging from 4% to 50%. From 4% to 25% slopes, the soils support an ecological/range site classification of Semidesert Shallow Loam (Wyoming Big Sagebrush or Black Sagebrush). From 25% to 50%, the Cadrina soils are classified as Desert Shallow Loam (Black Sagebrush) and rock outcrops are present within the landscape. Based on the composition of the soil mapping units, upland soils occupy approximately 335.0 acres (46%) of the 728.1 acres of the proposed Project Area construction disturbance.

The lowland, moderately deep to deep, and less rocky Muff and Gilston soils, respectively, occupy terraces above drainage ways and the drainages themselves, with slopes ranging from 1% to 4% and 2% to 8%, respectively. Muff soils support an ecological/range site classification of Desert Alkali Bench (Castlevalley Saltbush). Gilston soils support a classification of Semidesert

Gravelly Sandy Loam (Wyoming Big Sagebrush). Based on the composition of the soil mapping units, lowland soils occupy approximately 393.1 acres (54%) of the proposed Project Area construction disturbance.

Principal sources of differences among the soils are steepness of slope, soil thickness or depth to bedrock, coarse fragment content (rock content), erosion hazard, available water holding capacity, and salinity/sodicity levels (**Table 3.8**). These factors also represent sources of limiting factors to successful post-disturbance soil stabilization and revegetation as part of the implementation of both interim and final reclamation measures.

Soil Constraints

Less steep slopes, thicker soils (moderately deep to deep), lower coarse fragment contents, lower water erosion potentials, and higher available water holding capacities for the lowland Muff and Gilston soils would suggest a higher potential for successful stabilization and reclamation; however, potentials for moderate to high wind erosion and strongly sodic soil conditions result in a rating of Poor for both topsoil and reclamation material uses for both lowland soils (Tripp et al. 1982). The steeper slopes, shallow soils, higher coarse fragment contents, higher water erosion potentials, and very low water holding capacities of the Cadrina soils also result in a rating of Poor for both topsoil and reclamation material uses for the upland Cadrina soils (Tripp et al. 1982).

All four soil map units and all three of their respective soil components present constraints to post-disturbance successful stabilization and revegetation, as all four soil mapping units and their component soils are considered poor soil materials for use as topsoil and overall for use as suitable medium for reclamation. Each has one or more attributes that result in the classification of Poor for both topsoil use and for suitable reclamation material. In addition, all soils are low in organic matter content which contributes to their Poor rating.

Table 3.7 Soil Characteristics of the Project Area

Map Unit Number and Name	Components (%)	Portion of Project Area		Landscape Position	Parent Material	Depth Class Depth to bedrock	Ecological Range Site
		Acs.	%				
33 – Cadrina association 2 to 25% slopes	Cadrina extremely channery loam 55%	147.2	20.2%	Uplands, hills	Slope alluvium over residuum derived from sh and ss	Shallow 10 to 20 inches	Semidesert Shallow Loam (Wyoming Big Sagebrush)
	Cadrina extremely stony loam 30%						Semidesert Shallow Loam (Black Sagebrush)
36 – Cadrina extremely flaggy loam 25 to 50% slopes	Cadrina extremely flaggy loam 65%	23.7	3.3%	Uplands, hill	Slope alluvium and colluviums over residuum derived from sh and ss	Shallow 10 to 20 inches	Desert Shallow Loam (Black Sagebrush)
	Rock outcrop 20%			Cliff, erosion remnant, escarpment, ledge	Bedrock		
80 – Gilston-Muff-Cadrina, Cool complex 1 to 25% slopes	Gilston gravelly sandy loam, 2-8% slopes 30%	393.1	54.0%	Drainage way	Alluvium derived from ss	Deep greater than 60 inches	Semidesert Gravelly Sandy Loam (Wyoming Big Sagebrush)
	Muff clay loam, 1 to 4% slopes 30%			Strath terrace	Slope alluvium over residdum derived from sh	Moderately Deep 20 to 40 inches	Desert Alkali Bench (Castlevalley Saltbush)
	Cadrina extremely channery loam, 4-25% slopes 30%			Hill	Slope alluvium over residuum derived from sh and ss	Shallow 10 to 20 inches	Semidesert Shallow Loam (Wyoming Big Sagebrush)
159 – Muff-Cadrina, Cool association 1 to 25% slopes	Muff clay loam 50%	164.1	22.5%	Strath terrace	Slope alluvium over residdum derived from sh	Moderately Deep 20 to 40 inches	Desert Alkali Bench (Castlevalley Saltbush)
	Cadrina extremely channery loam, 4-25% slopes 35%				Slope alluvium over residuum derived from sh and ss	Shallow 10 to 20 inches	Semidesert Shallow Loam (Wyoming Big Sagebrush)
Total		728.1	100.0%				

Source: Leishman *et al*. 2003

Table 3.8 Soil Stabilization and Revegetation Factors in the Project Area.

Map Unit Number and Name	Components (%)	Portion of Project Area		Coarse Fragment (Rock) Content (%)	Erosion Hazard [1] Water / Wind	Available Water Holding Capacity	Salinity [2] / Sodicity [3] Levels
		Acs.	%				
33 – Cadrina association 2 to 25% slopes	Cadrina extremely channery loam 55%	147.2	20.2%	35-90%	L - M / L	Very Low	S / S
	Cadrina extremely stony loam 30%			35-90%	L - M / L	Very Low	S / S
36 – Cadrina extremely flaggy loam 25 to 50% slopes	Cadrina extremely flaggy loam 65%	23.7	3.3%	35-90%	L-M / L	Very Low	S / S
	Rock outcrop 20%						
80 – Gilston-Muff-Cadrina, Cool complex 1 to 25% slopes	Gilston gravelly sandy loam, 2-8% slopes 30%	393.1	54.0%	25-50%	L - M / H	Low	M / VH
	Muff clay loam, 1 to 4% slopes 30%			0-15%	L - / L - H	Low	S / VH
	Cadrina extremely channery loam, 4-25% slopes 30%			35-90%	L - M / L	Very Low	S / S
159 – Muff-Cadrina, Cool association 1 to 25% slopes	Muff clay loam 50%	164.1	22.5%	0-15%	L - / L - H	Low	S / VH
	Cadrina extremely channery loam, 4-25% slopes 35%			35-90%	L - M / L	Very Low	S / S
Total		728.1	100.0%				

Source: Tripp *et al* 1982

[1] Erosion hazard ratings: S - slight; M - moderate; H - high; and VH - very high (USDA SCS1994)

[2] Salinity ratings: VS – very slightly saline; S – slightly saline; M – moderately saline

[3] Sodicity ratings: S – slightly sodic; M – moderately sodic; H – strongly sodic

3.3.5 *Vegetation, Including Invasive Plant Species*

General Vegetation

The Project Area is located within the Uinta Basin Floor subregion of the Colorado Plateau ecoregion (Woods et al. 2001). Six distinct vegetation community/land cover types have been defined within the Project Area; they include salt desert shrub, sagebrush, grassland, cliff/canyon, badlands, and developed (**Table 3.9**). These communities were defined using land cover descriptions developed by the USGS for the Southwest Regional Gap Analysis Project (SWReGAP) and high resolution aerial imagery (USGS 2004), as modified by LIDAR aerial imagery obtained by EOG in 2008 in support of the Greater Chapita Wells EIS. As described in the subsections below, some of these communities represent a broader mosaic of multiple land cover types as defined by SWReGAP. Other communities include a single SWReGAP cover type but have been named differently to remain consistent with wildlife habitat types described later in the document.

Table 3.9 Vegetation Community Types that Occur within the Project Area

Vegetation Community/Land Cover Type	Project Area Acres	Percent of Project Area
Salt Desert Shrub	356.1	48.9%
Sagebrush	203.6	28.0
Grassland	30.8	4.2%
Cliff/Canyon	15.9	2.2%
Badlands	34.1	4.7%
Developed/Disturbed	87.5	12.0%
Total	728.1	100.0%

Source: SWReGAP mapping as modified by 2008 aerial image interpretation

The composition and distribution of vegetation community/land cover types in the Project Area are influenced by variations of factors including geology, soils, moisture, elevation, aspect, and slope. Vegetation community/land cover types are further modified by historic and current land uses (i.e., livestock grazing, agricultural development, and energy exploration and development). Descriptions of each vegetation community/land cover type are provided below.

Salt Desert Shrub - Salt desert shrub is the dominant vegetation community within the Project Area, comprising approximately 49% of area cover (**Table 3.9**). This community is generally characterized by open-canopied shrublands that are common in basins, plains, and on alluvial deposits of floodplains, alluvial fans, and pediment slopes. This community typically is found on medium- to fine-textured alkaline soils with saline and calcareous substrates. Dominant shrub species typically include shadscale, fourwing saltbush, spinescale saltbush, Gardner's saltbush, Wyoming big sagebrush, rubber rabbitbrush, Mormon tea, spiny hopsage, winterfat, and horsebrush. The understory is typically comprised of galleta, Indian ricegrass, blue grama, thickspike wheatgrass, western wheatgrass and a small variety of forbs including primrose, false yarrow, and annual buckwheat (Goodrich and Neese 1986; USGS 2004; USDA 2006).

Sagebrush - Sagebrush communities are common within the Project Area (**Table 3.9**). Wyoming big sagebrush and black sagebrush are the dominant sagebrush species. Black sagebrush occurs in shallow rocky upland soils that are high in carbonates (Goodrich and Neese 1986), while Wyoming big sagebrush typically is found in xeric sites adjacent to lowland valley bottoms (Welsh et al. 1993). Sagebrush communities account for approximately 28% of the Project Area. Other species found in sagebrush vegetation communities include rubber rabbitbrush, yellow

rabbitbrush, greasewood, and various saltbush species in areas of elevated soil salinity. Soils are typically well drained, moderately deep to deep, and non-saline. This community typically has a minor understory component that is comprised of grasses and forbs. Grass and forb species that commonly are associated with the sagebrush community include Indian ricegrass, blue grama, thickspike wheatgrass, Idaho fescue, Sandberg bluegrass, needle-and-thread grass, and Great Basin wildrye (USGS 2004; USDA 2006).

Grassland - Within the Uinta Basin, the grassland community is most prevalent on soils developed on exposures of the Uinta and Green River formations on gravelly or rocky sites (Goodrich and Neese 1986; Welsh et al. 1993). The Project Area contains less than 5% of this community (**Table 3.9)** (USGS 2004). Dominant plant species of grassland communities are generally drought-resistant and include Indian ricegrass, three-awn species, blue grama, needle-and-thread grass, muhly species, galleta grass, and to a lesser extent scattered dwarf-shrub varieties of sagebrush, saltbush, Mormon tea, winterfat, and snakeweed species (USGS 2004; USDA 2006). Cheatgrass, a widespread, invasive species, also is abundant throughout the Project Area (Goodrich and Neese 1986).

Cliff/Canyon - Cliff/canyon vegetation communities generally are sparsely vegetated with less than 6% plant cover (USGS 2004). These communities commonly occupy cliff faces, steep slopes of narrow canyons, and open tablelands of shallow soils dominated by exposed bedrock surfaces. Geologic composition of this cover type includes sedimentary rock, primarily of limestone, shale, and sandstone, with some eroding shale layers embedded between the harder rock layers (NatureServe 2012). Cliff/canyon communities make up approximately 2% of the Project Area (**Table 3.9) (**USGS 2004). Species in this community are common species from the salt desert shrub, sagebrush, and grassland communities (USGS 2004; USDA 2006).

Badlands - The badlands cover type is composed of barren and sparsely vegetated substrates of exposed geologic materials derived from marine shale, siltstones, and mudstones (NatureServe 2012). Badlands comprise approximately 5% of the Project Area (**Table 3.9**). Badlands typically experience high rates of soil erosion and therefore provide little soil material to support plant establishment and growth. The badlands vegetation community typically consists of sparse herbaceous and dwarf-shrub cover. Common species include mat saltbush, Gardner's saltbush, sagebrush, and herbaceous vegetation (USGS 2004; USDA 2006).

Developed/Disturbed - The developed (including previously disturbed) land cover within the Project Area includes developed oil and gas related facilities and previously disturbed areas undergoing reclamation. Developed areas within the GCWPA include existing roads, pipeline corridors, and well pads, and associated previously disturbed areas that are undergoing either interim or final reclamation. Developed/disturbed areas comprise approximately 12% of the Project Area (**Table 3.9**). These areas do not typically support vegetation or associated wildlife habitats (USGS 2004), but may be utilized by wildlife species, particularly where reclaiming vegetation is restoring cover approximating adjacent undisturbed lands.

Invasive, Non-native Plants and Noxious Weeds

Non-native, invasive and noxious plant species could become an increased component of plant communities in the Project Area due to ground disturbance and seed dispersing activity within and in the vicinity of the proposed project. The proliferation of these species, especially in areas of recent disturbance, and their negative effects upon the environment, has become a major area of concern for the BLM and the state of Utah. Non-native cheatgrass may be particularly problematic,

as this species is capable of invading a variety of habitats, often becoming a dominant species in rangelands throughout the western U.S. (Pellant 1996, Allen and Meyer 2002). While some non-native species can provide nutritious forage for wildlife and livestock, cheatgrass is only palatable for a short portion of the growing season.

Of particular concern is the infestation and spread of some non-native, invasive plant species known as noxious weeds. Noxious weeds commonly are defined as plants possessing the potential to either directly or indirectly cause harm or damage to natural resources, agricultural interests, the environment, or to public health (USDA 2012a). The federal Noxious Weed Act of 1974, as amended (7 USC 2801 et seq), requires cooperation with state, local, and federal agencies in the application and enforcement of all laws and regulations relating to the management and control of noxious weeds. The most common invasive species in the Project Area are Russian thistle, halogeton, and cheatgrass; however, the State of Utah, Uintah County, and the BLM have identified a list of noxious weeds likely to be present and/or introduced to the Project Area (**Table 3.10**). Although several of the listed noxious weed species including Canada thistle, field bindweed, hoary cress, Russian knapweed, Scotch thistle, and perennial pepperweed are known to occur in the region and Uintah County, these species currently are not known to occur within the Project Area; however, they have the potential to spread into the Project Area.

Table 3.10 Noxious Weeds and Invasive Species Potentially Occurring in the Project Area

Common Name[1]	Scientific Name[1]	Noxious Weeds List/ Invasive Species of Concern[2]		
		State of Utah[3]	Uintah County[4]	BLM VFO[5]
Diffuse knapweed	*Centaurea diffusa*	X	X	X
Spotted knapweed	*Centaurea maculosa*	X	X	X
Meadow knapweed	*Centaurea pratensis*	--	--	X
Yellow starthistle	*Centaurea solstitialis*	X	X	X
Squarrose knapweed	*Centaurea virgata* ssp. *squarrosa*	X	X	--
Oxeye daisy	*Chrysanthemum leucanthemum*	X	--	X
Chicory	*Cichorium intybus*	--	--	X
Canada thistle	*Cirsium arvense*	X	X	X
Bull thistle	*Cirsium vulgare*	--	--	X
Poison hemlock	*Conium maculatum*	--	--	X
Field bindweed	*Convolvulus arvensis*	X	X	X
Bermudagrass	*Cynodon dactylon*	X	X	--
Houndstongue	*Cynoglossum officinale*	X	X	X
Common teasel	*Dipsacus fullonum*	--	X	X
Russian olive	*Elaeangus angustifolia*	--	X	X
Quackgrass	*Elymus repens*	X	X	--
Redstem filaree	*Erodium cicutarium*	--	--	X
Leafy spurge	*Euphorbia esula*	X	X	X
Halogeton	*Halogeton glomeratus*	--	--	X
Venice mallow	*Hibiscus trionum*	--	--	X
Black henbane	*Hyoscyamus niger*	X	X	X
Dyers woad	*Isatis tinctoria*	X	X	--
Perennial pepperweed	*Lepidium latifolium*	X	X	X
Dalmation toadflax	*Linaria dalmatica*	X	X	X
Yellow toadflax	*Linaria vulgaris*	X	X	X
Purple loosestrife	*Lythrum salicaria*	X	X	--

Common Name[1]	Scientific Name[1]	Noxious Weeds List/ Invasive Species of Concern[2]		
		State of Utah[3]	Uintah County[4]	BLM VFO[5]
Scotch thistle	*Onopordum acanthium*	X	X	X
Sulfur cinquefoil	*Potentilla recta*	X	X	X
Perennial sowthistle	*Sonchus arvensis*	--	--	X
Perennial sorghum	*Sorghum almum*[5,6]	X	X	--
Johnsongrass	*Sorghum halepense*	X	X	--
Medusahead	*Taeniatherum caput-medusae*	X	X	--
Saltcedar	*Tamarix ramosissima*	X	X	X
Common tansy	*Tanacetum vulgare*	--	--	X
Puncturevine	*Tribulus terre*	--	X	X
Common mullein	*Verbascum thapsus*	--	--	X

[1] Species nomenclature is consistent with the USDA NRCS Plants Database (USDA 2012).

[2] Noxious weeds list or invading species of concern species include designated (X) or not designated (--).

[3] Officially designated and published as "noxious" in the State of Utah, as per the authority vested in the Commissioner of Agriculture under Section 4-17-3, Utah Noxious Weed Act (Utah State Legislature [USL] 2007).

[4] All property owners and custodians of public land are required by Law (Utah Code 4-17-7) to control weeds on lands under their jurisdiction.

[5] Species designated as a priority species per the BLM VFO; species known to occur in Rio Blanco County, Colorado (abutting Uintah County, Utah).

[6] Species designated as a noxious weed species per the Utah State Legislature; however, this species is not designated as a noxious weed species per the Utah Weed Control Association (UWCA 2012).

3.3.6 *Lands and Access*

Rights-of Way

The proposed project is situated in an area which has historically been extensively leased and developed for oil and gas. A number of roads, pipelines, and other linear facilities have been developed in existing ROWs. A review of the BLM LR2000 website and the BLM master title plats for Township 9S, Ranges 22E and 23E indicates existing ROWs actually or potentially crossed by Proposed Action facilities which are listed in **Table 3.11**.

Table 3.11 Existing Rights-of-Way Potentially Affected by the Proposed Action

Serial Number	Type	Grantee	Length (ft.)	Width (ft.)
UTU 045831	O&G Pipeline	QEP Field Services Co.	9,021	50
UTU 045851	O&G Pipeline	Questar Gas Management	4,412	25
UTU 047461	Roads	CIG Exploration Inc.	24,816	35
UTU 047468	Non-Energy Facilities	Kerr McGee Onshore LP	13,200	35
UTU 047480	O&G Pipeline	QEP Field Services Co.	871	30
UTU 047486	O&G Pipeline	QEP Field Services Co.	2,905	25
UTU 049226	Roads	Kerr McGee Onshore LP	35,640	24
UTU 049244	O&G Pipeline	QEP Field Services Co.	3,019	30
UTU 052113	O&G Pipeline	QEP Field Services Co.	1,320	30
UTU 052113	O&G Pipeline	QEP Field Services Co.	1,320	30
UTU 053087	O&G Pipeline	QEP Field Services Co.	2,265	30
UTU 053089	O&G Pipeline	QEP Field Services Co.	3,854	30
UTU 053905	O&G Pipeline	QEP Field Services Co.	2,165	30

Serial Number	Type	Grantee	Length (ft.)	Width (ft.)
UTU 054767	O&G Pipeline	QEP Field Services Co.	792	30
UTU 054813	O&G Pipeline	QEP Field Services Co.	1,950	30
UTU 057539	Roads	Uintah County	86,275	66-88
UTU 069125	Roads	Uintah County	64,300	45
UTU 069126	Roads	Newfield Prodution Co.	10,560	30
UTU 069127	Roads	Newfield Prodution Co.	1,056	30
UTU 069128	Roads	Dominion Exploration	2,112	30
UTU 069129	Roads	El Paso Production Co.	9,868	30
UTU 069130	Power Transmission	Moon Lake Electric Assn.	11,926	20
UTU 069140	O&G Pipeline	QEP Field Services Co.	20,098	30
UTU 071131	O&G Pipeline	QEP Field Services Co.	84,820	50
UTU 076940	Roads	EOG Resources Inc.	2,112	30
UTU 077746	Non-Energy Facilities	BLM	99,686	10
UTU 080336	O&G Pipeline	EOG Resources Inc.	10,032	20
UTU 080355	Roads	QEP Field Services Co.	9,504	30
UTU 080365	Roads	EOG Resources Inc.	7,061	30
UTU 080395	O&G Pipeline	QEP Field Services Co.	20,136	20
UTU 081263	O&G Pipeline	QEP Field Services Co.	26,272	30
UTU 081265	Roads	EOG Resources Inc.	13,699	30
UTU 081266	O&G Pipeline	EOG Resources Inc.	7,121	20
UTU 081638	O&G Pipeline	EOG Resources Inc.	25,000	10
UTU 081638	O&G Pipeline	EOG Resources Inc.	25,000	10
UTU 082759	Roads	EOG Resources Inc.	5,280	30
UTU 085038	Salt Water Disposal	EOG Resources Inc.	SWD pads and pipeline	
UTU 085369	Roads	EOG Resources Inc.	16,834	30
UTU 085370	O&G Pipeline	EOG Resources Inc.	1,920	20
UTU 085521	O&G Pipeline	Anadarko Uintah Midstream	32,700	50
UTU 085674	Power Transmission	Kerr McGee Onshore LP	58,294	80
UTU 087752	Salt Water Disposal	EOG Resources Inc.	41,095	10
UTU 087990	Salt Water Disposal	Kerr McGee Onshore LP	71,400	30, 50
UTU 146959	O&G Pipeline	QEP Field Services Co.	74,977	50

Source: BLM 2012a

Not all of the ROWs listed in **Table 3.11** would necessarily be affected by the Proposed Action. The uncertainty arises from the schematic nature of the master title plats and the lack of finalization of the location of some project facilities.

Roads and Traffic

A network of state, county, BLM, and oil and gas roads provide access to the eastern and western ends of the mostly linear Project Area (**Figure 1.1**). These roads range in surface material from paved, to gravel, to maintained native materials, and to two-track native materials. Primary access to the Project Area from Vernal, UT and the U.S. Highway 40 corridor is by three routes, two of which access the western end of the Project Area and a third route which accesses the eastern end. The first of the two accessing the western end follows a route traveling south on State Highway 88 from U.S. Highway 40 to the intersection with Uintah County Road (CR) 3310 Chipeta Grove Road just south of Ouray, UT and the crossing of the Green River. The

route then heads east on CR 3310 to the intersection with CR 3260 Glen Bench Road where the route routes follows CR 3260 south to the intersection with CR 3410 Fidlar Road. The route follows CR 3410 to the east and into the Project Area. CR 3410 is the existing road ROW which the proposed principal Phase 1A pipeline ROW mostly parallels between its western terminus in Section 22, T9S, R22E and its eastern terminus in Section 16, T9S, R23E.

The second route to the western end of CR 3410 follows State Highway 45 from U.S. 40 and the Vernal area south to the intersection with CR 3260 Glen Bench Road where the route heads principally southwest past the intersection with CR 3310 to the intersection with CR 3410, Fidlar Road where access to the Project Area is as described above.

The third route to the Project Area follows State Highway 45 past CR 3260 to either CR 3430 Little Bonanza Road and onto CR 3410 or past CR 3430 to the intersection with CR 3410 Fidlar Road. Following either CR 3430 to CR 3410 or just CR 3410 to the west, the routes access the Project Area.

Principal county roads providing access to the Project Area include:

CR 3310 Chipeta Grove Road
CR 3260 Glen Bench Road
CR 3410 Fidlar Road
CR 3430 Little Bonanza Road

The above roads plus open BLM/oil and gas roads support traffic for a full range of uses: residential/ranching, recreational, BLM management operations, federal grazing allottees, and oil and gas field development operations and maintenance of existing facilities. The most recently available County traffic counts (2010) for most of those county roads discussed above are presented in **Table 3.12**. Updates to traffic counts of affected County roads may occur during the summer of 2012.

Table 3.12 Traffic Count Summary for Principal County Roads Accessing the Project Are

Road Number	Road Name	Mile Post	Year	Average Daily Trips Count
3310	Chipeta Grove Road	West end	2010	1,411
		East end	2010	999
3260	Glen Bench Road	At SH 45	2010	1,457
		S of CR 3310	2010	2,546
3410	Fidlar Road	West end	2010	1,848

Ellis 2012.

3.3.7 *Livestock Grazing and Rangeland Health*

The Project Area overlaps portions of two federal grazing allotments, the Coyote Wash and Seven Sisters allotments. The allotments include public, state, and private lands. The portions within the Project Area are limited to federal and state surface lands. Both of the grazing allotments overlapping the Project Area are designated for sheep (BLM 2012). The Coyote Wash allotment was formed in September 2008 by combining four smaller allotments (Horned Toad, Little Emma, Stateline, and West Tabyago), which comprise pastures in the revised allotment. The Project Area overlaps the West Tabyago and Little Emma pastures of the Coyote Wash Allotment. Two sections of state lands, sections 16 and 32, T9S, R23E, are separately leased for grazing by SITLA (SITLA 2012). No Tribal lands are affected by the Proposed Action.

The carrying capacity of rangeland is generally characterized by the Animal Unit Month (AUM), the amount of forage required by one animal unit for one month. An AUM is defined in 43 CFR 4100.0-5 as forage for the sustaining of one cow or its equivalent for one month. Forage requirements for other species are extrapolated based on consumption rates. For example, five sheep are generally considered to be the equivalent of one cow.

The Project Area federal allotments have fall/winter and spring use periods. The size, carrying capacities, use seasons, and current management direction for the Project Area grazing allotments are summarized in **Table 3.13**. Rangeland carrying capacity of the Project Area ranges from approximately 8.4 to 10.7 acres per AUM with a weighted average of 9.2 acres per AUM, assuming uniform proration of the capacity of the entirety of each allotment to that portion overlapping the Project Area.

Rangeland forage productivity in the vicinity has been mapped by the NRCS (Leshman *et al*. 2003. Productivity can vary considerably, depending on moisture conditions. All of the range overlapped by the Project Area is considered to be of very poor quality, with productivity of 0-400 lbs. dry forage/acre/year.

Table 3.13 Summary of BLM Range Allotments

Allotment Name and Number		Stock	Total Acres	Federal Allotment Acres	Project Acres	Federal Active AUMs	Project Prorated Active AUMs	Acres per AUM	Mgmt. Category	Use Periods
Coyote Wash	02945	Sheep	108,706	82,760	289.1	7,762	27	10.7	Maintain	11/1-5/20
Seven Sisters	15845	Sheep	18,787	16,104	439.0	1,920	52	8.4	Maintain	3/1-4/15, 11/1-2/28
Totals			**127,493**	**98,864**	**728.1**	**9,682**	**79**			

Source: BLM 2012.

Rangeland Health Standards and Guidelines

In 1997, the Utah BLM developed standards for the desired conditions of the physical and biological characteristics of rangelands (BLM 1997).

The VFO has evaluated the problems and conflicts associated with federal grazing allotments meeting the rangeland health standards. For the allotments overlapping the Project Area, noted concerns include invasive species and seasonal use conflicts (BLM 2008). Both allotments are currently managed to maintain existing conditions. An allotment management plan (AMP) has been implemented for the Seven Sisters Allotment (BLM 2012).

Rangeland Health Assessments have been developed for both allotments. A preliminary determination is that the Coyote Wash Allotment is meeting the Rangeland Health Standards and is not likely to be affected by the Proposed Action. A determination has not been made for the Seven Sisters Allotment, however preliminary data suggest that the allotment is not meeting the Rangeland Health Standards, primarily due to extensive natural gas development within the allotment (**Appendix A**).

3.3.8 *Migratory Birds*

A number of migratory bird species are likely to occur in vegetation community/land cover types that provide suitable habitats within the Project Area. These species include passerines, birds of prey, and upland game bird species. Migratory bird species are protected under the MBTA (16 USC 703-711) and the Golden Eagle Protection Act. In addition, EO 13186 (66 Federal Register 3853) sets forth the responsibilities of federal agencies to implement further the provisions of the Act by integrating bird conservation principles and practices into agency activities and by ensuring that federal actions evaluate the effects of actions and agency plans on migratory birds. Many of these species have been identified as priority species by Partners in Flight or birds of conservation concern by the USFWS. Utah Partners-in-Flight is a cooperative partnership among federal, state, and local government agencies as well as public organizations and individuals organized to emphasize the conservation of birds not covered by existing conservation initiatives (Parrish *et al* 2002).

Migratory Bird Habitats

Migratory bird species (excluding non-special status raptor species) that may use the Project Area are listed below based on preferred habitats (i.e., nesting and foraging habitats) and vegetation community/land cover types present in the area. Migratory bird species that are federally-listed or are candidates for federal listing under the Endangered Species Act (ESA), are not present within the Project Area. Raptor species are addressed in a separate subsection below.

The natural vegetation types provide habitat for approximately 88% of the Project Area (see **Section 3.3.4**, above). The remaining 12% of the mostly linear Project Area overlaps or crosses areas occupied by existing facilities or previously disturbed lands which are now reclaiming to stable and productive habitat. The effectiveness of the reclaiming portions of the Developed/Disturbed type to support bird use as habitat would depend on the status of vegetative recovery and habitat needs of a particular species.

Salt Desert Shrub - The following migratory bird species may be associated with the salt desert shrub community, which is the largest vegetation community within the Project Area: blackthroated sparrow (*Amphispiza bilineata*), black-chinned hummingbird (*Archilochus alexandri*), common yellowthroat (*Geothlypis trichas*), Lewis's woodpecker (*Melanerpus lewis*),

gray flycatcher (*Empidonax wrightii*), western kingbird (*Tyrannus verticalis*), green-tailed towhee (*Pipilo chlorurus*), northern mockingbird (*Mimus polyglottos*), and Say's phoebe (*Sayornis saya*). These birds may also use the sagebrush vegetation type and portions of developed/disturbed lands within the mostly linear Project Area (BLM 2011a).

Sagebrush and Grassland - Migratory bird species commonly associated with the sagebrush and grassland communities associates that may be present within the Project Area include: the mountain bluebird (*Sialia currocoides*), grasshopper sparrow (*Ammodramus savannarum*), Brewer's sparrow (*Spizella breweri*), sage sparrow (*Amphispiza belli*), sage thrasher (*Oreoscoptes montanus*), green-tailed towhee *(Pipilo chlorurus)*, horned lark (*Eremophila alpestris*), loggerhead shrike (*Lanius ludovicianus*), western kingbird *(Tyrannus verticalis)*, northern mockingbird (*Mimus polyglottos*), vesper sparrow (*Pooecetes gramineus*), burrowing owl *(Athene cunicularia),* ferruginous hawk (*Buteo regalis),* short-eared owl (*Asio flammeus),* prairie falcon (*Falco mexicanus),* Swainson's hawk (*Buteo swainsonii),* gray flycatcher (*Empidonax wrightii),* and western meadowlark (*Sturnella neglecta*), (Parrish *et al* 2002).

Cliff/Canyon & Badlands - Although these birds may forage in other vegetation types, the following migratory birds may use Cliff/Canyon, Badlands, and rock outcrop areas in the Project Area: canyon wren (*Catherpes mexicanus*), barn swallow (*Hirundo rustica*), cliff swallow(*Hirundo pyrrhonota*), common raven (*Corvus corax*), and rock wren (*Salpinctes obsoletus*) (BLM 2008d).

Raptors

There are 20 species of raptors known to occur within the VFO with at least five species documented in the vicinity of the Project Area (UDWR and BLM 2009). Annual raptor surveys are conducted by UDWR throughout the VFO. In addition, site-specific surveys are conducted by BLM and independent contractors. Data from these surveys are compiled annually by BLM and UDWR using GIS mapping. Based on these data, 14 raptor nests have been documented within 0.5 mile of the Project Area. Raptor species that have been documented include golden eagle, burrowing owl, great-horned owl, prairie falcon, and red-tailed hawk, and two historic nesting locations where the species is unknown. Other raptor species (i.e., bald eagle, peregrine falcon, Swainson's hawk, turkey vulture, and the short-eared owl) may use the GCWPA for hunting or nesting. All raptor species and their nests are protected from take or disturbance under the MBTA. As protected species, BLM has adopted raptor BMPs (Vernal RMP, Appendix A) as guidelines for raptor protection. These guidelines specify appropriate spatial and seasonal buffers to protect nesting raptors and raptor nest locations. Locations of the 14 nests within the 0.5 mile buffer are mostly associated with scattered badlands and rock exposures surrounding the Project Area. Outside of the 0.5 mile buffered Project Area, nests are located mostly in areas of badlands, rock exposure, cliffs, the White River riparian areas, and upland bluffs and hills above the river bottom (UDWR and BLM 2009).

3.3.9 *Paleontological Resources*

Paleontological resources comprise the fossil record of past life forms that provide data vital to interpretation of earth history.

Paleontological Environment

Less than 1% of the Project Area is underlain by unconsolidated to semi-consolidated alluvial, colluvial, aeolian, and slump deposits of Quaternary age, found along ephemeral drainages in

sections 16 and 21, T9S, R23E. Fossils of scientific importance have not been recovered from these units and therefore these units are not considered potentially important areas for paleontologic resources. The entire remaining Project Area is underlain by predominantly fluvial rocks of Middle Eocene age, consisting of the upper Wagonhound Member of the Uinta Formation. The Wagonhound Member consists of mudstone and claystone with interbeds of fine-grained sandstone, minor conglomerate and tuffaceous beds (Sprinkel 2007, 2009) The Uinta Formation is known to produce scientifically important fossils and represents the type unit for the Uintan North American Land Mammal age. Therefore, the formation has continent-wide biostratigraphic importance (Rasmussen *et al*. 1999).

Both the BLM and the Utah Geological Survey maintain a database of recorded occurrences of scientifically important fossils. A Class I inventory of these records was conducted in support of the in-progress Greater Chapita Wells EIS (Sandau 2009). The inventory provided a report for each of 77 sections that overlap the EIS project area, which covers the current Project Area. This inventory was reviewed for all sections containing elements of the Proposed Action. In addition, field surveys for all of Phase 1A and most of Phase 1B of the Proposed Action were conducted (Sandau 2011, 2012, 2012a, 2012b, 2012c, 2012d). A summary of paleontological taxa reported from the Project Area is indicated in **Table 3.14.** Identification to genus level is often tentative. All fossil localities are sited within the upper Wagonhound Member of the Uinta Formation. The table indicates the number of sections from which a given taxa were reported.

Table 3.14 Fossil Taxa Reported from the Project Area

Class	Order	Family	Genus/Species/Description	Sections Recorded
Phylum Chordata				
Actinopterygii	Semionotiformes	Lepisosteidae	gar fragments and scales	2
Amphibia			miscellaneous amphibian fragments	1
Mammalia			mammalian miscellaneous bones	3
	Artiodactyla	Agriochoeridae	*Protoreodon*	2
	Carnivora		*Uintacyon*	1
	Dinocerta	Uintatheriidae	*Uintatherium*	2
	Perissodactyla		miscellaneous perissodactyl fragments	1
		Brontotheriidae	miscellaneous brontothere fragments	5
	Rodentia	Cylindrodontideae	*Pareumys*	1
Reptilia	Crocodilia		crocodiles and crocodilian fragments	1
	Testudines		miscellaneous turtle fragments	9
		Emydidae	*Echmatemys sp.*	6
		Trionychidae	*Apalone sp.*	3

Source: Sandau 2009, 2011, 2012, 2012a, 2012b, 2012c, 2012d; Gunnell and Bartells 1999. Classification principally from Paleobiology Database 2012.

Most paleontological investigations in the vicinity of the Project Area have been conducted in connection with construction of oil and gas facilities. Fossil locations are well distributed across most of the Project Area.

Fossil Occurrence Classification System and Project Area Ranking

As of October 2007, BLM has adopted the Potential Fossil Yield Classification (PFYC) system as the standard for evaluating potential impacts to paleontological resources on public lands (BLM 2007). This system uses a five-part classification of geologic units with respect to their potential for the production of scientifically important fossils. The evaluation scale runs from 1 (very low probability) to 5 (very high probability), based upon the unit's lithology, age, depositional setting, risk for adverse impacts, and history of producing fossils. Subclasses are assigned depending upon the degree of exposure of the unit. Approval of surface-disturbing activities affecting geologic formations rated 4 or 5 is likely to require surveys by a qualified paleontologist prior to or during construction. BLM also may apply protective mitigations and local field offices may alter the rankings based upon site-specific knowledge. In the Uinta Basin, the VFO has evaluated the PFYC classification for the Wagonhound Member as 4a or 5a, indicating high to very high paleontologic potential (Sandau 2011). Management of the public lands within the VFO will be done so as to protect fossil resources with potential scientific importance (BLM 2008). Two sections of state surface crossed by the Project Area are also considered sensitive with respect to paleontological resources (SITLA 2008).

3.3.10 *Threatened, Endangered, Proposed, or Candidate Plant Species*

Six plants currently designated by USFWS as threatened, endangered, or candidate species on the Endangered Species Act list occur within Uintah County (**Table 3.15**). Of these, only Uinta Basin hookless cactus (*Sclerocactus wetlandicus*), federally listed as threatened, occurs in the vicinity of the Project Area (UDWR 2012).

Uinta Basin Hookless Cactus

S. wetlandicus is found in salt desert shrub and pinyon-juniper communities on river benches, valley slopes, and rolling hills of the Duchesne River, Green River, and Mancos formations, in dry, fine-textured soils overlain with cobbles and pebbles from 4,500 to 6,600 feet elevation. The species is known only from portions of Uintah, Carbon, and Duchesne counties, Utah. Flowering occurs from April to late May. The species has 1-4 central spines, none of which are hooked, pink to lavender or reddish-pink flowers, seeds 2.5 mm broad, and stem tubercles merging only basally with the ribs. Buds are pointed and greenish or sometimes brownish. The fruit is short, barrel-shaped, reddish or reddish-grey (USFWS 2012, UNPS 2012).

The Project Area is largely located within areas identified as being potential habitat for *S. wetlandicus* (USFWS 2012a). However, the entire Project Area proposed disturbance is located outside of either of the USFWS identified core conservation areas (USFWS 2012b).

Table 3.15 Federally Listed, Candidate, and Proposed Plants Potentially Found in the Project Area

Species And Status*	Habitat Association	Potential for Occurrence Within the Project Area	References
Pariette cactus *Sclerocactus brevispinus* FT	This species is endemic to Duchesne and Uintah counties, occuring only in the Wagonhound member of the Uinta Formation on alkaline clay. It occurs in shadscale, mat-saltbush, and greasewood communities, at elevations between 4,700 to 5,400 feet.	**Low**. This species has not been documented near the proposed project and is not known to occur east of the Green River.	BLM 2008c; UNPS 2012.
Clay reed-mustard *Schoenocrambe argillacea* FT	Endemic to the Bookcliffs in Uintah County, this plant occurs on shale substrates at the contact zone between the lower Uinta and upper Green River formations in mixed desert shrub of Indian ricegrass and pygmy sagebrush between 4,800 and 5,600 feet.	**None**. No suitable habitat is present within the GCWPA.	BLM 2008c; UNPS 2012.
Shrubby reed-mustard *Schoenocrambe suffrutescens* FE	This species is endemic to Duchesne and Uintah counties. It grows in shadscale, pygmy sagebrush, mountain mahogany, juniper, and other mixed desert shrub communities in calcareous shale of the Green River Formation at 5,400 to 6,000 feet.	**None**. No suitable habitat is present within the GCWPA.	BLM 2008c; UNPS 2012.
Uinta Basin hookless cactus *Sclerocactus wetlandicus* FT	This species occurs in Carbon, Duchesne, and Uintah counties. It grows on gravelly hills and terraces in salt desert shrub, pinyon-juniper communities on river benches, valley slopes, and rolling hills of the Duchesne River, Green River, and Mancos formations between 4,500 an 6,600 feet. Recent taxonomic change from S. glaucus wetlandicus to S. wetlandicus occurred on September 18, 2007 by USFWS.	**Present**. This species is known to occur in the project and high numbers of individuals are present throughout the GCWPA.	BLM 2008c; UNPS 2012.
Ute ladies'-tresses *Spiranthes diluvialis* FT	This species occurs in wet meadows, stream banks, abandoned oxbows, marshes, and sub-irrigated floodplain habitats at 4,500 to 6,800 feet.	**None**. No suitable habitat is present within the Project Area.	BLM 2008c; UNPS 2012.
White River beardtongue *Penstemon scariosus var. albifluvis* FC	This species occurs in Uintah County and is found in shadscale, rabbit-brush, ricegrass, ryegrass, sagebrush, Barneby's thistle, and pinyon-juniper communities. It occupies sparsely vegetated tan shale slopes of the Green River Formation at 5,000 to 6,880 feet elevation.	**None**. No suitable habitat is present within the GCWPA.	BLM 2008c; UNPS 2012.
Graham beardtongue *Penstemon grahamii* FT (proposed)	This species occurs in Carbon, Uintah, and Duchesne counties. It is found in sparsely vegetated shadscale, *Eriogonum*, horsebrush, ryegrass, and pinyon-juniper communities on shale ledges and talus of the Green River Formation at 4,600-6,700 feet elevation.	**None**. No suitable habitat is present within the GCWPA.	UNPS 2012

Status and distr bution determined from UDWR 2012 listing. UNPS indicates Utah Native Plant Society.
FE Federally listed as endangered
FT Federally listed as threatened
FC Federal candidate

Cactus management on Vernal Field Office public lands requires field surveys to a distance of 300 feet from the limits of proposed surface disturbance (BLM 2009a). A survey was conducted in the fall of 2011 to determine whether any *S. wetlandicus* individuals or populations are located

within 300 feet of proposed disturbance associated with all of Phase 1A and most of Phase 1B of the Proposed Action. No individuals or populations were discovered within 300 feet of the surveyed proposed pipeline corridors. The remaining portions of Phase 1B and most of Phase 1C have been largely covered in surveys associated with prior unit approvals. Based upon previous surveys in the area, the closest identified *S. wetlandicus* plant is located approximately 0.25 mile west of the western portion of Phase 1B. This location is within Phase 1C of the Proposed Action. No other individuals or populations have been identified within the Project Area (Grasslands Consulting 2011).

3.3.11 *Surface Water Resources*

Water Quantity

Almost the entire Project Area is located within the Lower Coyote Wash (hydrologic unit code [HUC] 140500071007, 23,972-acre drainage area) and Inlet Sand Wash - White River (HUC 140500711003, 22,826-acre drainage area) sixth-order watersheds. Both comprise portions of the Lower White River (HUC 14050007, 797,532-acre drainage area) fourth-order watershed (USGS 2003). The White River is the only perennial stream in the vicinity. Flow in the river largely results from snowmelt and rainfall at higher elevations to the east in Colorado. Average annual precipitation at Vernal, Utah, is approximately 8.4 inches (WRCC 2012). Because of the low precipitation rates, runoff volume from the Project Area itself is relatively low. Most of the river's flow in summer and fall is therefore derived from groundwater contributions from adjacent alluvial aquifers and from runoff originating from precipitation at higher elevations in western Colorado. Larger tributaries may exhibit intermittent flow near their confluences with the river, but the vast majority of channels in the Project Area's vicinity exhibit only ephemeral flows.

The USGS has measured flows at several places along the White River near the Project Area. A summary of daily flow data for the period 1977-1983 is indicated in **Table 3.16**.

Table 3.16 Flow Data from Selected USGS Gaging Stations near Project Area

Stream or River	Basin Area (miles^2)	Mean Annual Flow (cfs)	Highest Mean Daily Flow (cfs)	Lowest Mean Daily Flow (cfs)
Coyote Wash near mouth, near Ouray, Utah. Site 09306878	228	5.1	548	0.0
White River near Watson, Utah. Site 09306500	4,020	626.5	3,820	13.0
White River at mouth, near Ouray, Utah. Site 09306900	5,120	728.4	5,240	7.3

Source: USGS 2012, data for period 1977-1983

The Coyote Wash station is located approximately three miles northwest of the Project Area. The two White River stations are located approximately six miles southeast (upstream) and 13 miles northwest (downstream) of the Project Area. Data from the White River station near Watson, Utah are not complete for the sampled period, but the mean flow data suggest that surface and ground water flow to the White River from tributary watersheds such as Coyote Wash in the vicinity of the Project Area contribute little to the overall flow.

A well developed flood plain has been established by the White River. The flood plain varies from a width of less than 500 ft to a width of more than 800 feet. in the vicinity of the Project Area, as viewed from 2011 National Agricultural Inventory Program aerial imagery.

Water Quality

Surface water quality in the vicinity of the Project Area reflects geologic source materials, land use, and the frequency and level of rain and snow events. As flows seasonally increase from principally snowmelt higher in the basin to the east in Colorado, water quality generally improves. After the snowmelt from upstream areas has passed in the spring, contributions from the lower part of the White River watershed make up a larger portion of flow in the river in the vicinity of the Project Area. During these periods of smaller flows, water quality in the lower White River generally deteriorates. This is primarily due to naturally occurring salts from exposed and eroding geologic formations and soils in the lower basin, flows returning from irrigated fields, and high sediment loads.

Suspended sediment loads for the White River upstream of the Project Area have been estimated from measurements made at the USGS 09306500 gaging station between 1985 and 1990. During this period, the mean daily sediment load was 2,205 tons/day at a mean flow rate of 739 cfs. Maximum sediment load measured was 121,000 tons/day at a flow rate of 1,440 cfs and a minimum load was measured at 12 tons/day at a flow rate of 143 cfs. Downstream of the Project Area, suspended sediment loads for the White River have been estimated from measurements made at the 09306900 gaging station between 1973 and 1984. During this period, the mean daily sediment load was 6,532 tons/day at a mean flow rate of 710 cfs. Maximum sediment load measured was 268,000 tons/day at a flow rate of 3,550 cfs and a minimum load was measured at 0.7 tons/day at a flow rate of 8.0 cfs.

Salinity, as measured by mean daily specific conductance values from upstream station 09306500 between 1987 and 1994, were typically in the range of 500-900 microsiemens per centimeter at 25 degrees Celsius. Specific conductance values from downstream station 09306900 between 1976 and 1985 were typically in the range of 500-1,000 microsiemens per centimeter at 25 degrees Celsius. Salinity values vary seasonally and with discharge levels, with lower values in the late winter and spring and higher values during low flow summer conditions (USGS 2012).

The Lower White River is designated under State of Utah water quality standards as protected for beneficial uses 2B (infrequent primary contact recreation and secondary contact recreation), 3B (warm water game fish and other warm water aquatic life), and 4 (agricultural uses, including irrigation and stock watering) (Utah Administrative Code Rule R317-2-6, UDWQ 2010a). The Utah Department of Environmental Quality (UDEQ) has evaluated the attainment of the Lower White River's designated beneficial uses, and has found the river to be fully supportive of agricultural and warm water aquatic life uses. The UDEQ has not evaluated the river for attainment of the Class 2B standard (UDWQ 2010a).

4 ENVIRONMENTAL IMPACTS

4.1 Direct & Indirect Impacts

Effects to environmental resources or values resulting from implementation of the proposed project may be either beneficial (positive) or detrimental (negative) and may vary in duration from short-term (until completion of interim or final reclamation), typically five or more years in

this portion of the Uinta Basin, to long-term which would encompass project life and may be permanent in the absence of successful restoration or reclamation. Impacts anticipated for this project may be negligible (little or no effect to the resource), low (impacts are difficult to detect and cause minimal change to the resource), and moderate (impacts which are readily apparent but which do not meet the criteria of significant impacts). Impacts may be either direct, occurring at the same time and place as the Proposed Actions, or indirect, occurring at another time or location. Analysis of impacts resulting from implementation of the Proposed Action assumes application of the Applicant Committed Design Features.

4.2 Alternative A - Proposed Action

4.2.1 *Air Quality and Climate*

Construction Emissions

Construction of the proposed LGS would result in short-term emissions of various pollutants from central facility pad leveling, pipeline excavation and installation, and installation of various types of production processing equipment at each of the central facilities. Pollutants would be emitted during construction cycles of the Phase 1 LGS, which is assumed to be constructed over a four-year period. A summary of estimated project construction emissions is indicated in **Table 4.1**.

Table 4.1 Annual Construction Emissions for the Proposed Action

Year	Pollutant (tons)						
	NOx	VOC	CO	PM_{10}	$PM_{2.5}$	HAPS	CO_2
1	0.63	0.04	0.47	1.26	0.40	0.01	69.86
2	0.63	0.04	0.46	1.26	0.40	0.01	69.83
3	0.89	0.06	0.65	1.73	0.56	0.01	99.08
4	0.88	0.06	0.65	1.73	0.56	0.01	99.04
TOTAL	3.03	0.21	2.23	5.97	1.93	0.03	337.80

Source: ENVIRON 2013

Long-term Emissions

Implementation of the Proposed Action would result in reductions in a number of pollutant emissions. Removal of wellsite combustion units, tanks, and reduction in truck traffic would substantially reduce emissions of criteria and hazardous air pollutants. Operation of central facilities would add to pollutant emissions, but the overall effect would be a considerable reduction. Scaling from emissions inventories developed for the in-progress Greater Chapita Wells Natural Gas Infill Project EIS (ENVIRON 2012) to the number of wells to be connected to Phase 1 of the LGS indicates reductions in long-term (i.e. upon full build out of Phase 1 of the LGS), annual criteria and hazardous air pollutants of 61-97% from existing levels, as indicated in **Table 4.2**. Emissions from SO_2 were not included in the emission inventory analysis because Chapita field SO_2 emissions are not expected to have significant impacts on ambient air quality. Nearby large development projects, such as the adjacent Greater Natural Buttes Project, have shown very small SO_2 emissions.

Table 4.2 Annual Long-term Pollutant Emissions Reductions from the Proposed Action

Emissions Source	LGS Phase 1 Estimated Emissions (TPY)					
	NOx	VOC	CO	PM10	PM2.5	HAPS
Uncontrolled Wells (364)	71.62	6,261.32	59.65	9.81	6.43	522.49
Controlled Wells (364)	0.53	970.75	0.32	1.83	0.78	13.98
TOTAL WELLS CHANGE	-71.09	-5,290.57	-59.33	-7.99	-5.65	-508.51
Central Facilities (14)	12.27	61.33	5.39	1.95	0.77	2.47
TOTAL EMISSIONS CHANGE	-58.82	-5,229.24	-53.94	-6.03	-4.89	-506.04
TOTAL % CHANGE	-82.1%	-83.5%	-90.4%	-61.5%	-76.0%	-96.9%

Source: ENVIRON 2012. Emissions assume electrified central facilities

Although the exact ozone formation process is incompletely understood, reduction in output of the NO_x and VOCs precursors by 82% and 84%, respectively, would substantially reduce ozone formation precursors resulting from emissions from existing project wells.

Reductions in NO_x and PM emissions would contribute to improvements in regional haze and nitrogen deposition conditions. Removal of VOC combustors and reduction in truck traffic would account for part of the reduction in NO_x emissions and would therefore contribute to a reduction in GHG emissions.

In conformance with EPA's letter to the BLM State Office (received July 27, 2012) regarding voluntary emissions reductions and mitigation developed through the NEPA process, BLM confirms that:

- The liquids gathering system analyzed in this EA could offset anticipated future emissions from proposed infill natural gas development being analyzed in the Greater Chapita Wells Natural Gas Infill Project EIS.
- It is intended that the emissions reductions achieved by the liquids gathering system will be implemented in a timely manner, reductions will be quantifiable and enforceable, and reductions will be effectively monitored.
- Emission reductions will be reported on a per-pollutant basis.

Mitigation

EOG will track the progress of implementation of the LGS in terms of wells connected and emission sources removed from well pads. Based on a per-well emissions reduction calculation, a cumulative tally of achieved reductions, as well as offsetting increases in emissions resulting from operation of additional central facilities for each pollutant, will be maintained. A summary results form will be reported to BLM on a quarterly basis indicating net change in emissions.

4.2.2 *Cultural Resources*

All facilities would, to the extent feasible, be located in or adjacent to previous disturbance corridors and these areas have been previously inventoried. However, any surface-disturbing activities, including road and pipeline construction and clearing of sites for the central facilities, could result in direct effects to, and potential destruction of, cultural sites. Increased Project Area activity associated with human and vehicular traffic and possible illegal collection of cultural artifacts represent secondary and indirect effects. Direct effects are more easily mitigated, as

sites identified during field surveys are well documented. Illegal collection is, by its nature, less apparent and more difficult to prevent.

Cultural resource surveys have previously been conducted over all of Phase 1A and most of Phase 1B and all eligible sites have been avoided by the proposed utility corridors. Phase 1C corridors, which would largely be located adjacent to existing well pads, roads, and pipeline corridors, have also been mostly previously surveyed and all eligible sites have been avoided. Prior to any site specific approval of Phase 1C, or for the central facilities, EOG would complete cultural resource inventories for any facilities not already surveyed and cleared. Avoidance of all NRHP-eligible sites is the typical and preferred mitigation. In the very unlikely event that avoidance is not possible on a site specific basis for Phase 1C or for the central facilities, EOG would work with BLM and EOG's archaeological contractor to devise a mitigation plan, which might include recovery and curation. Construction would not proceed in such a situation prior to BLM agreement that site recovery had been completed. Implementation of the Proposed Action would not result in direct effects to cultural sites as all would be avoided or, in rare circumstances, recovered in conformance with guidance from BLM. Indirect effects are anticipated to be minimal based on the avoidance of sites in the area.

Mitigation

In addition to applicant-committed design features, the following mitigation is recommended:

1. EOG will provide notification to its employees and contractors that unapproved collection of cultural artifacts from federal or state lands is a crime under both federal and Utah laws.

4.2.3 *Fish and Wildlife Excluding USFWS Designated Species*

Direct effects to wildlife principally include impacts to supportive habitat, but can also include direct loss of individuals from such causes as vehicular traffic and displacement of individuals from prime vegetative cover to habitat with inferior forage. Effects to habitat include direct loss of supportive vegetation and conversion into industrial sites, modification of vegetative cover and reduced forage carrying capacity until completion of reclamation, and the potential for a minor increase in fragmentation of habitat. Displacement of individuals or local populations can result in overuse of habitat where the displaced animals must compete with the native population, thereby increasing stress on the animals as well as the supporting habitat. For special status species, increased stress could result in pressures for federal listing or increase the potential for population reduction or local extinction.

Implementation of the Proposed Action would result in the direct short-term loss of approximately 728 acres of surface which is either covered with native vegetation (about 88% of the Project Area) or with reclamation vegetation in previously disturbed areas (about 12% of the Project Area). This disturbance would result in loss of forage until completion of interim or final reclamation. Life-of-project disturbance would be approximately 65 acres, following reclamation of pipeline corridors.

For the long-term, implementation of the Proposed Action would greatly reduce the amount of heavy truck traffic operating in the Project Area. Traffic reduction would result in lower levels of harassment and collision mortality of local animal populations and would be a net beneficial impact.

Big Game

The principal impact to big game would result from temporary forage loss following pipeline installation. This would primarily affect pronghorn, portions of whose crucial yearlong range overlap almost the entire Project Area. Pronghorn also fawn in this portion of their range. The Vernal RMP does not include timing limitation stipulations protective of pronghorn in this area. The Project Area currently comprises a developed gas field, with attendant well pads, surface pipelines, roads, and other facilities. Pronghorn inhabiting the area are reasonably acclimated to human industrial activity in the vicinity. Construction activity is anticipated to occur intermittently over a period of up to seven years and would not occur simultaneously at all locations. Individual animals would be expected to avoid areas of active construction, which would likely last less than a week in any location.

Effects to other big game species, notably mule deer and Rocky Mountain bighorn sheep, are anticipated to be minimal to non-existent as construction activities would affect very little, if any, of their mapped range in the area.

White-tailed Prairie Dog

Although much of the Project Area is considered to be potential prairie dog habitat, prairie dog colonies have not been identified within the immediate vicinity. The closest colony is located about one mile north of the northern terminus of the proposed Phase 1A pipeline corridor, the northernmost portion of the Proposed Action. All of the other mapped prairie dog towns in the general area are north of that colony. None of the phases of the Proposed Action would overlap any mapped colony. The Vernal RMP imposes a controlled surface use stipulation prohibiting surface-disturbing activities within 660 feet of certain colonies, including those north of the Project Area. Direct effects to prairie dogs are not anticipated as no colony would be disrupted by construction activity and construction traffic would be likely to use Fidlar Road which does not cross any mapped colony.

Burrowing Owl

Disturbance of prairie dog colonies would have the potential to affect burrowing owls, which commonly make use of prairie dog burrows for nesting habitat. Because no prairie dog colonies have been identified within one mile of the proposed project facilities or disturbance, impacts to burrowing owls are not anticipated.

4.2.4 *Soils*

Potential impacts to soils from implementation of the Proposed Action would likely include:

- The removal of protective vegetative cover and corresponding soil productivity from previously undisturbed lands and also from previously disturbed, reclaimed lands, where present;
- The excavation/blading of soil materials, the mixing of soil horizons, and the creation of cuts and fills, some with steeper slopes; and
- The compaction of soil materials beneath life-of-project facilities.

The exposure of unconsolidated soil materials during construction would increase the potential for accelerated soil loss due to water and wind erosion. The creation of steeper cut and fill slopes could exacerbate the soil loss, particularly due to water erosion. Due to approximately 46% of the Project Area's soils (upland soils) being shallow and droughty (limited soil material, high rock content, and very low water holding capacity), soil loss would likely increase the challenges to achieving

timely revegetation and ultimate reclamation of those disturbed areas. Accelerated soil loss could also occur on the remaining 54% of the disturbed Project Area due to water erosion of cuts and fills and wind erosion of the mostly sandy-loam textured lowland soils. In addition, compaction of soils during construction or operational activities can reduce soil water and oxygen availability to plants, and compaction of sodic soils can exacerbate the reduced water and oxygen availability conditions already posed by elevated adsorbed sodium levels.

Implementation of the Proposed Action would result in the disturbance of approximately 648 acres for pipeline construction, 56 acres for construction and operation of centralized liquids gathering facilities, and 24 acres of disturbance for access road construction for a total of 728 acres of construction disturbance (**Tables 3.1** and **3.2**). The application of final reclamation measures following pipeline construction and interim measures following access road construction would stabilize and initiate the revegetation process for all pipeline construction disturbance and for 1.7 acre of access road ROW disturbance positioned beyond the roads' travel ways and shoulders/ditching. Approximately 65 acres of disturbance would remain for the life-of-project. EOG would apply appropriate reclamation measures outlined in its 2009 BLM-approved Reclamation Plan (EOG 2009) that conforms to the BLM's Green River District Reclamation Guidelines (BLM 2009b). The measures applied would correspond to the siting of facilities within areas of upland and lowland soils and their respective conditions/characteristics as described above. However, even with the timely application of these measures, the establishment of effective vegetative cover is expected to take between 5 and 10 years, due to the constraints of limited precipitation characteristic of the area and due to the limiting characteristics of the soils noted above. The application and maintenance of non-vegetative soil stabilizing measures for this period would be key to limiting accelerated erosion and maintaining a soil cover in which successful revegetation can occur.

Mitigation

Disturbed soil surfaces would be stabilized immediately upon cessation of construction using BLM-approved BMPs. Soil stabilizing methods would be maintained until successful re-establishment of vegetative cover.

4.2.5 *Vegetation, Including Plant Invasive Species*

General Vegetation

Vegetation community/land cover types would be directly affected by the construction of the access road, pipelines, and five centralized facilities. Direct effects would involve removal of native vegetation and previously reclaimed vegetation, resulting in a loss of productive forage and habitat for wildlife and grazing livestock. Indirect effects could result from loss of exposed soil materials with the loss of protective vegetative cover, which in turn could limit and/or delay future reestablishment of native vegetation and revegetation success as part of reclamation of disturbed areas.

As much as 728.1 acres of native and reclaimed vegetation may be initially lost or damaged as part of Proposed Action implementation. With the appropriate application of final and interim reclamation measures to 413.4 acres of pipeline ROW and portions of access road after construction, approximately 80.1 acres of disturbance would remain for the life-of-project within the boundaries of the centralized facilities and access road travel way, shoulder, and ditch. Given the mostly linear nature of the principal components of the Proposed Action, it has been assumed

for purposes of this analysis that vegetation types would be impacted proportionally to their occurrence within the Project Area (**Table 3.3**). Effects would therefore be greatest in the Salt Desert Shrub (49%), with lesser effects to Sagebrush (28%), and the combination of minor vegetation types Grasslands, Cliff/Canyon, and Badlands (11%).

In portions of the Project Area where terrain requires leveling for pipeline construction and access road construction, the vegetative cover would be bladed to the side of the ROW, topsoil would be bladed, as necessary, and stockpiled along the edge of the ROW, and the remaining surface would be leveled as needed to allow safe pipeline construction. Such construction would likely result in creation of cuts and fills. Following pipeline installation, the fill material would be pulled back to cover the cut slopes as part of recontouring to the approximate pre-disturbance contours. For portions of access road ROW not supporting road use, interim reclamation measures would be applied as described in EOG's BLM-approved reclamation plan for operations within the BLM Green River District (dated October 19, 2009). The interim measures would stabilize and prepare the disturbed soils to receive seed and other surface treatment features as needed based on site specific conditions. For pipeline construction ROW, the entire ROW would undergo final reclamation consistent with EOG's reclamation plan (dated October 2009). Upon abandonment/decommissioning, access roads and centralized facilities would undergo final reclamation consistent with the reclamation plans.

In areas of the Project Area where more level terrain permits pipeline construction after only scalping of the vegetative part of the native or reestablished covering vegetation while leaving the roots intact, effects on vegetation would be the loss of the vegetative cover and associated forage, and some possible damage to the plants' roots. The soil cover would be left un-excavated, un-bladed, however pipeline and road construction would likely compact soil materials, until chiseling and seedbed preparation is implemented as part of final pipeline reclamation. Application of final reclamation measures as described in EOG's reclamation plan would stabilize and prepare the disturbed soils to receive seed and other surface treatment features as needed based on site specific conditions. Where tanks have been removed from existing well pads, portions of these pads would be reclaimed, while still maintaining sufficient space for truck access as indicated in **Figure 2.5**.

In most cases the establishment of effective vegetative cover is expected to take between 5 and 10 years, due to the constraints of limited precipitation characteristic of the area and due to the limiting characteristics of the soils noted above. In those portions of the Project Area where roots were left intact within the soil, vegetative cover would likely recover more quickly than in those areas where the vegetation including the roots were bladed from the construction zone and the soils were bladed and stockpiled ahead of construction. In either case, the application and maintenance of non-vegetative soil stabilizing measures for this period would be key to limiting accelerated erosion and maintaining a soil cover in which successful revegetation could occur.

The long-term reduction in heavy truck traffic within the Project Area would result in lower rates of deposition of airborne dust onto local plants. This effect would improve growth conditions and would be a beneficial impact.

<u>Invasive, Non-native Plants and Noxious Weeds</u>

Surface-disturbance within the Project Area would likely increase the potential for the establishment and spread of non-native, invasive/noxious weed populations. Ground disturbance can provide an optimal location for weed establishment (Sheley et al 1996), as weed species typically succeed in areas lacking competition from native plant populations. Furthermore, noxious

weed seeds could be transported within the Project Area and/or to and from the Project Area by heavy machinery and vehicles. Foreign materials used for reclamation such as straw, mulch and seed could also include noxious weed seeds. Even seed certified as "weed-free" is allowed to include a threshold of cheatgrass seed, making it important to seek out seed from trusted providers. Cheatgrass is an especially problematic weed species, as it is capable of invading a variety of habitats (Pellant 1996, Allen and Meyer 2002), including those with minimal disturbance.

In compliance with EOG's approved reclamation plan dated October 19, 2009, and in conformance with BLM's Green River District Reclamation Guidelines, EOG would be responsible for the monitoring, management, and control of noxious weed infestations on project-related surface disturbances and would consult with the VFO and/or the Uintah County Weed Department regarding acceptable weed management and control methods. Control measures would be those authorized in *the Bureau of Land Management Programmatic Environmental Impact Statement Vegetation Treatments using Herbicides on Bureau of Land Management Lands in 17 Western States* (BLM 2007a) and as approved by the BLM Authorized Officer.

The long-term reduction in heavy truck traffic would result in the commensurate reduction in vehicular transport of invasive species seeds. Thus, a major vector for the spread of invasive species and noxious weeds would be considerably curtailed, resulting in a beneficial impact.

4.2.6 *Lands and Access*

Rights-of Way

EOG would amend its existing federal right-of-way (ROW) UTU-87752 to include two to four new buried pipelines for produced or fresh water. EOG also proposes a new ROW (UTU-89149) which would contain buried combined gas and oil pipelines. These ROWs would be located in Sections 14-15 and 22-24 of T9S, R22E and Sections 16, 19, 21, and 28-30 of T9S, R23E S.L.B.&M (**Figure 1.1**). It is currently anticipated that approval of Phase 1C of the gathering system would be done on a unit basis, subject to the location of the site specific application, and pending subsequent site-specific NEPA, because it is anticipated that no non-unit wells would contribute produced water, gas, or oil to the proposed pipelines.

Implementation of the Proposed Action would minimize impacts from ongoing development in an area already heavily infused with energy-related roads, pipelines, power transmission lines, and other facilities. EOG and other operators in the Project Area are experienced at safely expanding the existing network of linear facilities in the field. Approximately 2/3 of the existing ROWs in the project area are assigned to EOG or to the gas gatherer that collects the applicant's gas within the field. Installation of the proposed pipelines are not anticipated to negatively affect other ROW holders within the field, however notification of other ROW holders would occur prior to installation to ensure safe installation and operation practices.

Roads and Traffic

Implementation of the Proposed Action would result in reduction of heavy truck traffic within and entering or leaving the vicinity of the Project Area. An average annual reduction of approximately 14,800 truck trips would be achieved from access to existing wells within the Project Area over the next 22 years, with annual rates varying from around 35,000 trips in the near term to around 7,000 trips late in the lives of the existing wells as both gas and liquids production would decline over time (**Table 4.3**). Based on 2010 Uintah County traffic counts in the area, this would represent an overall annual traffic decrease of approximately 0.5%.

In addition to existing well traffic, future traffic to NEPA-approved and EIS-proposed wells would similarly be reduced. Annual traffic reductions would be dependent on the pace of future development.

Table 4.3 Estimated Existing Well Fluid Transport Truck Trips Eliminated by LGS

Year	Centralized Existing Wells	Annual Water Trips Saved Per Well	Annual Oil Trips Saved Per Well	Total Water Trips Saved	Total Oil Trips Saved	Total Annual Trips Saved
2012	364	90.4	6.6	32,906	2,400	35,306
2013	364	72.0	6.4	26,208	2,330	28,538
2014	364	61.7	5.2	22,459	1,893	24,352
2015	364	54.7	4.5	19,911	1,638	21,549
2016	364	49.5	4.2	18,018	1,529	19,547
2017	364	45.5	3.8	16,562	1,383	17,945
2018	364	42.2	3.5	15,361	1,274	16,635
2019	364	39.4	3.3	14,342	1,201	15,543
2020	364	37.0	3.1	13,468	1,128	14,596
2021	364	35.0	2.9	12,740	1,056	13,796
2022	364	33.1	2.7	12,048	983	13,031
2023	364	31.3	2.6	11,393	946	12,340
2024	364	29.6	2.5	10,774	910	11,684
2025	364	28.0	2.3	10,192	837	11,029
2026	364	26.5	2.2	9,646	801	10,447
2027	364	25.0	2.1	9,100	764	9,864
2028	364	23.7	2.0	8,627	728	9,355
2029	364	22.4	1.9	8,154	692	8,845
2030	364	21.2	1.8	7,717	655	8,372
2031	364	20.1	1.7	7,316	619	7,935
2032	364	19.0	1.6	6,916	582	7,498
2033	364	17.9	1.5	6,516	546	7,062
Total Truck Trips Saved				**300,373**	**24,895**	**325,268**
Annual Average Truck Trips Saved				**13,653**	**1,132**	**14,785**

Source: EOG traffic estimates

4.2.7 *Livestock Grazing and Rangeland Health*

As noted in **Table 4.4**, implementation of the Proposed Action would result in the loss of approximately 728 acres of range use until the successful completion of reclamation of the pipeline corridors. The vast majority of this disturbance would be located adjacent to existing roads or other facilities. Based on estimated range carrying capacity in the area (8.4-10.7 acres/AUM) (**Table 3.6**), this equates to a temporary loss of approximately 79 AUMs. Long-term forage loss (following pipeline corridor reclamation) would result from construction and operation of the centralized facilities, about 64.7 acres, or about seven AUMs. Based on typical reclamation rates in the Uinta Basin, the temporary loss of 79 AUMs could last for five or more years.

Table 4.4 Project Surface Disturbance by Grazing Allotment

Allotment Name	Phases 1-3 Pipeline Length (feet)	Facilities & Access Roads (count) [1]	Project Total Construction Disturbance (acres)
Coyote Wash	142,714	6	289.1
Seven Sisters	217,446	8	439.0
Total	360,160	14	728.1

[1] Facility locations are undetermined at this time. Best estimates used for calculations.

In addition to direct forage loss, livestock grazing in oil and gas development areas can be affected by stock loss from vehicular collisions, spills of potentially hazardous materials, and introduction of invasive species which can supplant more desirable vegetation. For these effects, implementation of the Proposed Action would likely result in a long-term reduction of negative impacts to grazing within the Project Area. Construction and operation of the liquids gathering system would result in a substantial reduction in vehicular traffic which would minimize the potential for animal-vehicle collisions, reduce fugitive dust transport onto forage vegetation bordering area roads, and reduce a principal distribution vector for invasive species. Removal of storage tanks from local well pads would reduce the potential for spills of fluids.

Range improvements near or affected by the Proposed Action are indicated in **Table 4.5**.

Table 4.5 Range Improvements Near or Affected by the Proposed Action

Facility Type	Facility Name	Location		
		Section	Township	Range
Fence	Friendship	22	9S	22E
Cattleguard	CG	22	9S	22E
Cattleguard	CG	23	9S	22E
Reservoir	Horse Track	24	9S	22E
Fence	Friendship	27	9S	22E
Fence	Friendship	27	9S	22E
Fence	Friendship	27	9S	22E
Cattleguard	CG	27	9S	22E
Reservoir	Pond	21	9S	23E
Reservoir	Seven Sisters #3	30	9S	23E
Reservoir	Unnamed	30	9S	23E
Corral	Robinson	30	9S	23E

Source; BLM 2011

Impacts to range improvements are anticipated to be minimal. Although the final locations of all proposed facilities are not definitely known, almost all of the proposed disturbance is expected to be adjacent to disturbance associated with existing facilities. It is possible that temporary disturbance to some range improvements could occur.

Continued oil and gas development within the vicinity of the Project Area is likely to present ongoing challenges to rangeland health. The short-term result of implementation of the Proposed

Action would be additional loss of forage until successful reclamation, which could require five or more years. For the life of the project, some negative effects to range health would be mitigated by reducing vehicular traffic loads and associated dust deposition on vegetative cover near access roads.

Mitigation

1. If construction occurs during periods of grazing use, the Applicant will notify and coordinate activities with the grazing lessee to minimize conflicts with range use.
2. Effects on range improvements are to be avoided. Unavoidable conflicts with range improvements will be coordinated with BLM for relocation or other mitigation measures.

Rangeland Health Standards and Guidelines

Among problems affecting the rangeland health of both allotments are invasive species. Since vehicular traffic within the area is a prominent transmission vector for the seeds of invasive species, major reductions in that traffic should reduce the potential for the spread of invasives. Therefore, implementation of the Proposed Action would likely have net positive impacts on efforts to maintain rangeland health in the vicinity. In addition, preliminary data analysis suggests that the Seven Sisters Allotment is not meeting rangeland health standards as a result of the extensive nature of oil and gas development within the allotment. However, implementation and operation of the LGS would reduce oil and gas development and production impacts proportional to reclamation and the reduction in industry traffic.

4.2.8 *Migratory Birds*

Direct and indirect impacts to migratory birds would result from the disturbance from construction and operations associated with the Proposed Action. Construction of project facilities would disturb approximately 728.1 acres of habitat within the Project Area. Construction activities and habitat disturbance associated with building pipelines, access road, and centralized facilities would likely result in the loss or alteration of migratory bird breeding and foraging habitat within the Project Area. Impacts include disturbance to nesting individuals and possible displacement of birds that may result in deterring birds from nesting in the immediate vicinity, abandonment of nests, or destruction of nests. In the vicinity of activities associated with construction, elevated levels of noise and human presence in the area would likely be a primary cause for temporary avoidance of the area by migratory birds. If vegetation clearing and/or continued construction activity coincides with the nesting season, nest locations could be abandoned within or adjacent to the Project Area during the early stages of nesting, or direct loss of nests with eggs or young could potentially occur within the Project Area.

Birds displaced by temporary construction activities would likely relocate to adjacent suitable habitat; therefore, no long-term impact is anticipated. It is anticipated that environmental consequences of temporary displacement of migratory birds would affect some individuals, but would not impact the continued viability of any species.

The environmental consequence of migratory bird breeding and foraging habitat loss is anticipated to be minimal at the regional scale based on the following:

- the loss or alteration of nesting, breeding, and foraging habitats would be confined to a relatively small geographic area (compared to population range or migratory birds expected in the project area);

- no identified critical habitat types would be affected; and
- the proposal is primarily located adjacent to existing disturbed areas.

Following the construction of pipeline segments within the gathering system, final reclamation measures would be initiated within the construction ROWs. Interim reclamation measures would also be implemented for portions of access road ROW not comprising the road travel way and shoulder/ditches. Measures implemented would begin the reestablishment of vegetative cover and the restoration of habitat for migratory birds. However, in most cases, even with the timely application of measures, the establishment of effective vegetative cover is expected to take between 5 and 10 years, due to the constraints of limited precipitation characteristic of the area and due to the limiting characteristics of the disturbed soils.

For the life of project (following pipeline corridor reclamation), 64.7 acres of the 728.1 disturbed acres would support project operations, access roads and centralized facilities. These acres would be lost as habitat until project decommissioning and until subsequent reclamation successfully restores vegetative cover and habitat. While habitat would likely be incrementally restored for the pipeline ROWs, during the operational life-of-project, habitat would be lost for 64.7 acres of central facilities sites and access roads.

Sensory (noise and movement) disturbance associated with project operations is anticipated to be much reduced and more consistent over an extended period of time in comparison to construction activities; therefore, less intrusive to migratory birds. The long-term reduction in heavy truck traffic within the Project Area would be a beneficial impact to migratory birds and other local wildlife resulting in lower levels of harassment and collision-related mortality.

Mitigation

Impacts to migratory birds would be reduced by implementing the following measures:

1. Conduct nesting raptor surveys prior to construction during nesting period, per BMPs included in Appendix A of the Vernal RMP.

4.2.9 *Paleontological Resources*

Paleontological reconnaissance surveys have been completed for all of Phase 1A and most of Phase 1B of the Proposed Action. The remaining portions of Phase 1B and Phase 1C of the project have mostly been previously surveyed and covered under prior unit approvals and would be completed over all areas of proposed surface disturbance which have not been previously surveyed upon receipt of a site specific application. The surveys of phases 1A and 1B (Sandau 2011, 2012, 2012a, 2012b, 2012c, 2012d) located various fossils of potential scientific importance, and propose appropriate mitigations, as indicated in **Table 4.6**. The surveys confirmed that all of the exposed bedrock in the Project Area is rated as Class 5a, 4a, or 4b for paleontologic potential.

Table 4.6 Proposed Action Paleontological Survey Results

Phase	Report Number	Survey Results and Recommendations
1A	11-177 11-209	Numerous fossils found on survey, particularly turtle fragments. Class 4a and 5a. Monitor pipelines entire corridor during construction. [Sandau 2012, 2012a]
1B	11-178	Numerous fossils of various vertebrates found during the survey. Class 5a. Monitor pipeline entire corridor during construction. [Sandau 2012b]
	11-179	Numerous fossils found on survey. Class 4a and 5a. Monitor entire pipeline corridor during construction. [Sandau 2011]
	11-180	Numerous fossils, including turtles and mammalian fragments. Class 5a and 4b. Monitor construction in Sec. 28 and spot monitor the remainder during construction. [Sandau 2012c]
	12-04	Fossil turtles, mammals, and a possible plant fossil were located. Class 5a. Future construction should be monitored along the entire pipeline corridor.

Paleontological resources found on the public lands are recognized by the BLM as constituting a fragile and nonrenewable record of the history of life on earth, and so represent an important and critical component of America's natural heritage. These resources are afforded protection under 43 CFR 3802 and 3809, and penalties possible for the collection of vertebrate fossils are under 43 CFR 8365.1-5. Where pre-construction surveys have indicated a high potential for the occurrence of vertebrate fossils, direct effects to paleontologic resources from destruction during excavation activities can be mitigated by monitoring by a qualified paleontologist. Indirect effects, such as unauthorized and illegal collection activities, can be mitigated by ensuring that project personnel are aware of the prohibitions against such activities.

Mitigation

1. For unsurveyed portions of Phase 1B and for Phase 1C, depending upon the results of paleontological reconnaissance surveys, a permitted paleontologist will be present to monitor excavations that would disturb bedrock.
2. For phases 1A and 1B, monitor construction of the entire utility route. Monitor construction in section 28 and spot monitor the rest of the utility route covered in report 11-180.
3. If any vertebrate fossil(s) are found during construction within the Project Area, Operator will report all occurrences of paleontological resources discovered to a geologist with the Vernal Field Office of the BLM and the Office of the State Paleontologist.
4. The operator will inform all persons associated with this project who would be involved in construction activities of the requirements for protecting paleontological resources.

4.2.10 *Threatened, Endangered, Proposed, or Candidate Plant Species*

Uinta Basin Hookless Cactus

Field surveys for *Sclerocactus wetlandicus* were conducted for all of Phase 1A and most of Phase 1B. Remaining portions of Phase 1B and Phase 1C have been largely previously surveyed and additional surveys would be completed, as necessary, upon receipt of site specific applications. Because the exact locations of the proposed central facilities have not been determined, field survey have not been conducted. Field surveys and on-site inspection for these facilities would be conducted prior to construction. Surveys conducted to date for the Proposed Action indicated that sited surface disturbing activities would not be located within 300 feet of *S.*

wetlandicus individuals or populations. Should future surveys establish the presence of *S. wetlandicus*, construction activities would be re-routed, as necessary, to avoid any identified individuals or populations. There would be no direct impacts to this species, assuming continued avoidance of populations located in future surveys.

Indirect impacts may result from disturbance of unoccupied plant habitat, disturbance of habitat used by cactus pollinators, introduction of invasive species in the vicinity, and negative effects of dust transport onto individuals or populations resulting from construction excavation and construction traffic. The substantial reduction in heavy duty truck traffic within the Project Area would result in a long-term reduction in transport of airborne traffic-associated dust onto plants in the general vicinity.

Because of the potential for indirect effects, it is determined that implementation of the Proposed Action **"may affect, but is not likely to adversely affect"** the Uinta Basin hookless cactus. Pursuant to Section 7 of the Endangered Species Act of 1973 and in conformance with 50 CFR Part 402.13, informal Section 7 consultation with USFWS has been completed.

Mitigation

1. Prior to construction, all pipelines and facilities will be surveyed, resurveyed, or spot checked as required by current BLM and US Fish and Wildlife Service policy.
2. Any routes found to be within the required avoidance distance will be re-routed to maintain the appropriate avoidance distance.
3. Should re-routes of a portion of the pipeline be found to be infeasible, the route will require separate site specific NEPA, mitigation, and Section 7 consultation to minimize the impacts of the route construction on the populations.

4.2.11 *Surface Water Resources*

The principal potential impact to surface water resources resulting from implementation of the Proposed Action would be construction-derived sediment transport to area drainages including the White River. Approximately 40% of the Project Area is located within the Lower Coyote Wash watershed. Minimum transport distances along the Coyote Wash drainage from this portion of the proposed project to the river would be more than nine miles. It is likely that sediment transport from project activities from this portion of the Project Area to the White River would be negligible. Approximately 60% of the Project Area is located in the Inlet Sand Wash - White River watershed, which drains to ephemeral streams which drain directly to the White River. For almost all of these ephemeral streams, the transport distance to the river would still be three or more miles. For a few segments of pipeline corridor, drainage from construction activities would occur off Project Area uplands, directly to the river. The closest disturbance to the river would be one portion of Phase 1C in the extreme southwestern part of the Project Area. Approximately 1,100 feet of corridor disturbance would be located within 500 feet of the river.

Approximately 89% of project construction disturbance would involve pipeline installation. Reclamation activities, in conformance with both the Green River District reclamation guidelines (BLM 2009b) and EOG's reclamation plan (EOG 2009), would be instituted as soon as feasible following installation. EOG's plan calls for actions that would "immediately stabilize disturbed areas and provide necessary conditions to facilitate eventual ecosystem reconstruction by returning the land to a safe, stable, and properly functioning condition." Only Approximately 65 acres of life-

of-project disturbance would remain following reclamation of pipeline corridors, and of that disturbance almost all would be covered with gravel surfacing.

Both of the cited EOG Reclamation Plan and the BLM Green River District Reclamation Guidelines call for monitoring of reclamation success. An annual reclamation report containing monitoring data, reclamation actions taken, and compliance with the Green River District reclamation objectives would be submitted to the Authorized Officer no later than May of the following year. Should monitoring identify issues of concern regarding soil stability and/or revegetation success, action would be taken to control soil instability (accelerated erosion) and/or to establish a vegetative cover that would meet BLM standards for success.

Implementation of the Proposed Action could result in leaks from the pipelines or spills at the central facilities. Pipeline leaks would be determined by monitoring the pipeline ROW and pipeline pressures. Leaks would be addressed as soon as discovered. Spills would be addressed in accordance with procedures included in the field spill control, containment, and countermeasure (SPCC) plan.

4.3 Alternative B - No Action

Selection of the No Action Alternative would deny the Applicant's proposal, the Proposed Action would not be implemented, and activities within the Project Area would continue under prior management authorizations. In the vicinity of the Project Area, these activities would include ongoing oil and gas development authorized under prior NEPA analyses.

4.3.1 *Air Quality*

Under Alternative B, current emissions from approximately 364 wells would continue. The reductions in emissions resulting from implementation of the Proposed Action, as indicated in **Table 4.1,** would not be realized.

4.3.2 *Cultural Resources*

Under Alternative B, short-term surface disturbance to 728.1 acres would not occur and there would be no direct impacts to cultural resources. Continued oil and gas development in the area would be managed under previous authorizations, and direct impacts to cultural resources would, in almost all cases, be eliminated through avoidance. The potential for indirect impacts would remain at the same levels as disclosed by prior NEPA analyses.

4.3.3 *Fish and Wildlife Excluding USFWS Designated Species*

Under Alternative B, short-term surface disturbance to 728.1 acres and construction of approximately 77.6 miles of linear facilities would not occur. Short-term disruption of existing forage habitat would be reduced. Continued oil and gas development in the area would be managed as under previous authorizations, including current levels of heavy truck traffic, and direct and indirect impacts to wildlife resources would remain at the levels disclosed by prior NEPA analyses.

4.3.4 *Soils*

Under Alternative B, there would not be short-term project-related disturbance of 728.1 acres of soil cover in the Project Area. Continued oil and gas development in the area would be managed as under previous authorizations, and direct and indirect impacts to soils would remain at the levels disclosed by prior NEPA analyses.

4.3.5 *Vegetation, Including Invasive Species*

Under Alternative B, short-term project-related disturbance of 728.1 acres of vegetative cover within the Project Area would not occur. Continued oil and gas development in the area would be managed as under previous authorizations, including the potential for transport of the seeds of invasive species via heavy truck, and direct and indirect impacts to vegetation and potential for introduction or spread of invasive species would remain at the levels disclosed by prior NEPA analyses.

4.3.6 *Lands and Access*

Under Alternative B, the Applicant's proposal would be denied and no construction would be authorized. Project-related impacts to existing federal ROWs in the Project Area would not occur. Traffic on area roads associated with construction of the proposed project would not occur, and traffic levels associated with current trucking of produced fluids would continue into the future. Continued oil and gas development in the area would be managed as under previous authorizations, and direct and indirect impacts to existing ROWs and to area traffic levels would remain at the levels disclosed by prior NEPA analyses.

4.3.7 *Livestock Grazing and Rangeland Health*

Under Alternative B, short-term project-related disturbance of 728.1 acres of range lands within the Project Area would not occur. Continued oil and gas development in the area would be managed as under previous authorizations, and direct and indirect impacts to range quality and livestock grazing would remain at the levels disclosed by prior NEPA analyses.

4.3.8 *Migratory Birds*

Under Alternative B, short-term surface disturbance to 728.1 acres would not occur. Reductions in levels of light and heavy truck traffic would not occur. Continued oil and gas development in the area would be managed as under previous authorizations, and direct and indirect impacts to migratory birds would remain at the levels disclosed by prior NEPA analyses.

4.3.9 *Paleontological Resources*

Under Alternative B, short-term surface disturbance to 728.1 acres would not occur. An undetermined volume of bedrock classified as classes 5a, 4a, or 4b with respect to paleontological potential would also avoid disruption. Direct, project-related impacts to fossils would be eliminated, as would the potential for excavation and curation of fossils of scientific importance revealed during project construction. Continued oil and gas development in the area would be managed as under previous authorizations, and direct and indirect impacts to paleontological resources would remain at the levels disclosed by prior NEPA analyses.

4.3.10 *Threatened, Endangered, Proposed, or Candidate Plant Species*

Under Alternative B, short-term project-related disturbance of 728.1 acres of vegetative cover within the Project Area would not occur. Continued oil and gas development in the area would be managed as under previous authorizations, and direct and indirect impacts to threatened, endangered, proposed, or candidate plant species would remain at the levels disclosed by prior NEPA analyses.

4.3.11 *Surface Water Resources*

Under Alternative B, there would not be short-term project-related disturbance of 728.1 acres of soil cover in the Project Area and potential associated sediment transport would not occur. Continued oil and gas development in the area would be managed as under previous authorizations, and direct and indirect impacts to local water bodies from sediment transport, would remain at the levels disclosed by prior NEPA analyses.

4.4 Cumulative Impacts Analysis

Cumulative impacts are defined in the Council on Environmental Quality (CEQ) regulations (40 CFR 1508.7) as "*...the impact on the environment that results from the incremental impact of the action when added to other past, present, and reasonably foreseeable actions regardless of what agency (Federal or non-Federal) or person undertakes such other actions*." For this analysis, foreseeable actions are considered to be limited to those for which some formal notice or permit application has been made and does not include potential developments which are speculative. Because differentiating between past and present (ongoing) effects can be problematic, they have been considered together as existing effects in this analysis.

<u>Cumulative Impacts Analysis Areas</u>

The geographic scope used for analysis varies for each cumulative impacts issue and is described in **Table 4.7** for each resource, where applicable, along with the rationale for selecting the analysis area extent.

Table 4.7 Cumulative Impacts Analysis Areas

Resource	Cumulative Impacts Analysis Area (CIAA)	CIAA Area (acs.)	Rationale
Air Quality	WRAP Uinta Basin	11,093,108	The CIAA encompasses Uintah, Duchesne, Carbon, Grand, and Emery counties, normally used for regional air analyses.
Cultural Resources	GCWPA	42,027	Cultural resources in the project area are generally confined to localized sites. The GCWPA includes more than 99.9% of the current and potentially expanded portions of the LGS.
Fish and Wildlife Excluding USFWS Designated Species	DWR WMUs 10A, 9D	1,930,624	The CIAA is of sufficient size to contain most direct and indirect impacts, particularly to area big game herds.
Soils	Lower White River 4th Order Watershed	797,533	Direct sediment transport would be confined within the watershed.
Vegetation and Invasive Species	Lower White River 4th Order Watershed	797,533	The CIAA is of sufficient size to contain most local impacts to vegetation and seed dispersal from invasive species would likely be largely confined within the watershed.
Lands and Access	Uintah County	2,867,002	Project area is centrally located and access would be via Uintah County roads.
Livestock Grazing and Rangeland Health	Five Allotments Bordering GCWPA	213,446	Include White River Bottoms, Coyote Wash, Antelope Draw, and Seven Sisters, Bonanza, but not Olsen AMP on the far side of the White River
Migratory Birds	DWR WMUs 10A, 9D	1,930,624	The CIAA is of sufficient size to contain most direct and indirect impacts and a variety of vegetation types for migratory birds.
Paleontology	GCWPA	42,027	Fossils are confined to the general project area. The GCWPA includes the current and potentially expanded portions of the LGS.
Threatened, Endangered, Proposed, or Candidate Plant Species	2011 USFWS Uinta Basin Hookless Cactus Habitat Polygons	517,631	The CIAA encompasses contiguous potential habitat for the only TEPC plant species in the vicinity of the proposed project.
Surface Water Resources	Lower White River 4th Order Watershed	797,533	Direct sediment transport would be confined within the watershed.

For this document, those sources of past, present, and reasonably foreseeable impacts which have been considered for the analysis of cumulative impacts, and the rationale for inclusion and exclusion from the analysis, are indicated in **Table 4.8**.

Table 4.8 Types of Cumulative Impacts Analyzed

Impact Sources	Analysis Rationale
Analyzed Impact Sources	
Minerals Industry	
Oil & Gas Wells	Public data are available from UDOGM and NEPA documents (federal wells) for analysis of existing and foreseeable disturbance.
Gas Plants & Facilities	Public data are available from the Utah AGRC, EPA, Utah DEQ, and NEPA documents for existing and many foreseeable actions.
Foreseeable Pipelines	Public data are available from NEPA documents and FERC filings.
Mining	Public data are available from Utah Geological Survey, BLM, and NEPA documents for existing and some foreseeable mine projects.
Roads	
Federal & State Highways	Public data are available from county roads and/or GIS departments and/or federal land management agencies for existing roads. Data regarding some foreseeable roads is available from NEPA documents.
County Main Roads	
Minor Roads	
D-Class Roads	
Vegetation Management	
Vegetation Treatments	Data regarding past vegetation management disturbance may or may not be available from federal agencies. Foreseeable management actions on federal lands are available from NEPA documents.
Hazardous Fuels Reductions	
Non-analyzed Impact Sources	
Minerals Industry	
Existing Pipelines	There are no readily available or comprehensive data sources for past and present pipeline construction. Many pipelines in the Uinta Basin are laid on the surface. Buried pipeline reclamation is typically begun shortly after construction and completed within a few years, depending on reclamation conditions. Well pad gathering pipelines have been included under the oil and gas well estimates.
Utilities	
Electric Power Lines	There are no readily available and comprehensive data sources for the locations of existing and foreseeable power lines.
Other	
Grazing	There are no readily available and comprehensive data sources regarding existing and foreseeable impacts to the land from grazing operations. Grazing represents a long-term and historical use of the land and the levels of acceptable grazing loads have typically been determined based on prior usage. In most cases, these levels are expected to be continued into the future with only minor variations.

The levels of surface disturbance associated with the analyzed impact types indicated in **Table 4.8** are used as a best estimate for total impacts to the human environment. The rationale is that levels of surface disturbance are among the most comprehensive and readily determined impacts and because disturbance to the surface results in direct and indirect effects to many analyzed resources.

Cumulative Impacts Estimates

Past and present (existing) and foreseeable surface disturbance associated with those impact types indicated in **Table 4.8** are estimated in **Table 4.9**.

Table 4.9 Cumulative Surface Disturbance Impacts of the Proposed Action

Impact Source and Cumulative Impacts Analysis Area (CIAA)	CIAA Extent (acs)	Count or Miles	Facility Dist. (acs) or ROW (ft)	Total Disturbance (acs)	Count or Miles	Facility Dist. (acs) or ROW (ft)	Total Disturbance (acs)
		Past and Present Activities			Reasonably Foreseeable Activities		
DWR WMUs 10A, 9D	1,930,624			31,960			45,199
Current LGS Proposed Action		NA	NA	NA	77	50	728
Minerals Industry							
Oil & Gas Wells		6,607	2.20	14,535	15,897	2.43	38,655
Gas Plants & Facilities		13	Variable	98	0	NA	0
Pipelines		NA	NA	NA	48.3	Variable	543
Mining		7	Variable	59	0	NA	0
Roads							
Federal & State Highways		142	70	1,206	0	NA	0
County Main Roads		929	40	4,506	45	84	453
Minor Roads		491	35	2,083	0	NA	0
D-Class Roads		3,127	25	9,474	0	NA	0
Vegetation Management							
Vegetation Treatments		0	NA	0	2	Variable	1,100
Hazardous Fuels Reductions		0	NA	0	7	Variable	3,720
Lower White River Watershed	797,533			17,917			33,248
Current LGS Proposed Action		NA	NA	NA	77	50	728
Minerals Industry							
Oil & Gas Wells		4,840	2.20	10,648	12,028	2.43	29,246
Gas Plants & Facilities		10	Variable	89	0	NA	0
Pipelines		NA	NA	NA	28.4	Variable	309
Mining		4	Variable	47	0	NA	0
Roads							
Federal & State Highways		59	70	498	0	NA	0
County Main Roads		384	40	1,861	0	NA	0
Minor Roads		203	35	860	0	NA	0
D-Class Roads		1,292	25	3,914	0	NA	0
Vegetation Management							
Vegetation Treatments		0	NA	0	2	Variable	1,100

Impact Source and Cumulative Impacts Analysis Area (CIAA)	CIAA Extent (acs)	Count or Miles	Facility Dist. (acs) or ROW (ft)	Total Disturbance (acs)	Count or Miles	Facility Dist. (acs) or ROW (ft)	Total Disturbance (acs)
		Past and Present Activities			Reasonably Foreseeable Activities		
Hazardous Fuels Reductions		0	NA	0	3	Variable	1,865
Allotments Bordering GCWPA	213,446			7,060			10,557
Current LGS Proposed Action		NA	NA	NA	77	50	728
Minerals Industry							
Oil & Gas Wells		2,312	2.20	5,086	3,806	2.43	9,254
Gas Plants & Facilities		2	Variable	32	0	NA	0
Pipelines		NA	NA	NA	10.7	Variable	75
Mining		2	Variable	32	0	NA	0
Roads							
Federal & State Highways		16	70	133	0	NA	0
County Main Roads		103	40	498	0	NA	0
Minor Roads		54	35	230	0	NA	0
D-Class Roads		346	25	1,047	0	NA	0
Vegetation Management							
Vegetation Treatments		0	NA	0	1	Variable	500
Hazardous Fuels Reductions		0	NA	0	0	NA	0
GCWPA	42,027			3,191			6,765
Current LGS Proposed Action		NA	NA	NA	77	50	728
Minerals Industry							
Oil & Gas Wells		1,288	2.20	2,834	2,476	2.43	6,021
Gas Plants & Facilities		4	Variable	54	0	NA	0
Pipelines		NA	NA	NA	4.4	30	16
Mining		0	NA	0	0	NA	0
Roads							
Federal & State Highways		2	70	14	0	NA	0
County Main Roads		19	40	93	0	NA	0
Minor Roads		0	35	0	0	NA	0
D-Class Roads		65	25	197	0	NA	0
Vegetation Management							
Vegetation Treatments		0	NA	0	0	NA	0
Hazardous Fuels Reductions		0	NA	0	0	NA	0

Impact Source and Cumulative Impacts Analysis Area (CIAA)	CIAA Extent (acs)	Count or Miles	Facility Dist. (acs) or ROW (ft)	Total Disturbance (acs)	Count or Miles	Facility Dist. (acs) or ROW (ft)	Total Disturbance (acs)
		Past and Present Activities			Reasonably Foreseeable Activities		
Local Sage-grouse Habitat	198,872			5,109			7,950
Current LGS Proposed Action		NA	NA	NA	77	50	728
Minerals Industry							
Oil & Gas Wells		1,511	2.20	3,324	2,744	2.43	6,671
Gas Plants & Facilities		1	Variable	6	0	NA	0
Pipelines		NA	NA	NA	4.2	Variable	51
Mining		0	NA	0	0	NA	0
Roads							
Federal & State Highways		15	70	124	0	NA	0
County Main Roads		96	40	464	0	NA	0
Minor Roads		51	35	215	0	NA	0
D-Class Roads		322	25	976	0	NA	0
Vegetation Management							
Vegetation Treatments		0	NA	0	1	Variable	500
Hazardous Fuels Reductions		0	NA	0	0	NA	0
Sclerocactus wetlandicus Habitat	517,631			17,154			31,470
Current LGS Proposed Action		NA	NA	NA	77	50	728
Minerals Industry							
Oil & Gas Wells		5,648	2.20	12,426	12,590	2.43	30,614
Gas Plants & Facilities		13	Variable	98	0	NA	0
Pipelines		NA	NA	NA	14.2	Variable	124
Mining		0	NA	0	1	4	4
Roads							
Federal & State Highways		38	70	323	0	NA	0
County Main Roads		249	40	1,208	0	NA	0
Minor Roads		132	35	558	0	NA	0
D-Class Roads		838	25	2,540	0	NA	0
Vegetation Management							
Vegetation Treatments		0	NA	0	0	NA	0
Hazardous Fuels Reductions		0	NA	0	0	NA	0
Uintah County	2,867,002			25,644			461

Impact Source and Cumulative Impacts Analysis Area (CIAA)	CIAA Extent (acs)	Count or Miles	Facility Dist. (acs) or ROW (ft)	Total Disturbance (acs)	Count or Miles	Facility Dist. (acs) or ROW (ft)	Total Disturbance (acs)
		Past and Present Activities			Reasonably Foreseeable Activities		
Current LGS Proposed Action		NA	NA	NA			8
Roads							
Federal & State Highways		211	70	1,790	0	NA	0
County Main Roads		1,380	40	6,691	45	84	453
Minor Roads		729	35	3,093	0	NA	0
D-Class Roads		4,643	25	14,070	0	NA	0

4.4.1 *Air Quality*

The CIAA for air quality is taken as the oil and gas productive portion of the WRAP Uinta Basin, an area encompassing Uintah, Duchesne, Grand, Emery, and Carbon counties and comprising more than 11 million acres. The CIAA contains the entirety of the topographical Uinta Basin airshed. Regional air quality analyses, such as the recently completed Greater Natural Buttes EIS (BLM 2012c), typically select this area for air modeling emissions inventory development. A summary of the 2018 projected regional controlled oil and gas emissions from that analysis is indicated in **Table 4.10**. The term "controlled" indicates the emissions inventory assumed application of scheduled future equipment control requirements mandated by existing law or regulations.

Table 4.10 Uinta Basin Projected 2018 Controlled Oil and Gas Emissions

County	NO_X	CO	SO_2	PM_{10}	VOCs
Uintah	5,888	5,136	20	284	126,425
Carbon	1,322	1,550	2	81	13,553
Duchesne	2,512	2,723	6	186	41,495
Grand	213	154	1	7	2,345
Emery	204	170	1	6	444
Total 10,139		**9,733**	**30**	**564**	**184,262**

Source: GNB EIS Air Quality technical support document

Implementation of the Proposed Action would incrementally reduce the indicated pollutant emissions according to the values indicated in **Table 4.2**. The No Action alternative would not result in these emission reductions.

4.4.2 *Cultural Resources*

The CIAA for cultural resources is taken as the project area for the Greater Chapita Wells EIS, an area of 42,027 acres. As indicated in **Table 4.9**, analyzed past and present actions have resulted in approximately 3,191 acres of surface disturbance within the CIAA. Foreseeable actions would result in approximately 6,765 acres of additional surface disturbance within the CIAA. Implementation of the Proposed Action would add 778.1 acres of surface disturbance to the current or previously disturbed areas. Because the principal mitigation for cultural resources is avoidance, it is anticipated that cumulative impacts resulting from implementation of the Proposed Action would be negligible. The No Action alternative would not contribute to an accumulation of impacts.

4.4.3 *Fish and Wildlife Excluding USFWS Designated Species*

The CIAA for fish and wildlife is composed of UDWR Wildlife Management Units (WMUs) 8D (Bonanza) and 10A (Bitter Creek), comprising 1,930,624 acres. As indicated in **Table 4.9**, analyzed past and present actions have resulted in approximately 31,960 acres of surface disturbance within the CIAA. Foreseeable actions would result in approximately 45,199 acres of additional surface disturbance within the CIAA. Implementation of the Proposed Action would add 728.1 acres to loss or disturbance of existing wildlife habitat. These effects would last until completion of reclamation of the disturbed surface. The No Action alternative would not contribute to an accumulation of impacts.

4.4.4 *Soils*

The CIAA for soils is the Lower White River fourth order watershed, comprising 797,533 acres. As indicated in **Table 4.9**, analyzed past and present actions have resulted in approximately 17,917 acres of surface disturbance within the CIAA. Foreseeable actions would result in approximately 33,248 acres of additional surface disturbance within the CIAA. Implementation of the Proposed Action would add 728.1 acres of surface disturbance, which would result in some transport of sediment from disturbed surfaces, although transport would be mitigated by implementation of standard measures designed to reduce transport within the field. These effects would last until completion of reclamation of the disturbed surface. The No Action alternative would not contribute to an accumulation of impacts.

4.4.5 *Vegetation, Including Invasive Species*

The CIAA for vegetation and invasive species is the Lower White River fourth order watershed, comprising 797,533 acres. As indicated in **Table 4.9**, analyzed past and present actions have resulted in approximately 17,917 acres of surface disturbance within the CIAA. Foreseeable actions would result in approximately 33,248 acres of additional surface disturbance within the CIAA. Implementation of the Proposed Action would add 728.1 acres of surface disturbance, which would result in loss of vegetative cover from disturbed surfaces and increased potential for transport and establishment of non-native species. These effects would last until completion of reclamation of the disturbed surface. The No Action alternative would not contribute to an accumulation of impacts.

4.4.6 *Lands and Access*

The CIAA for lands and access is Uintah County, comprising 2,867,002 acres. As indicated in **Table 4.9**, analyzed past and present actions have resulted in approximately 25,644 acres of surface disturbance associated with Uintah County roads. Foreseeable actions would result in approximately 461 acres of additional roads surface disturbance within the CIAA. Implementation of the Proposed Action would add 8 acres of roads surface disturbance, which has the potential to conflict with other ROWs and land uses in the area depending on placement. Constructed roads would result in long-term, life-of-project disturbance if and until the additional roads are reclaimed. The proposed action would also reduce truck traffic in the area by 0.5%. The No Action alternative would not contribute to an accumulation of impacts to existing ROWs and land uses, however the truck traffic savings would not be realized.

4.4.7 *Livestock Grazing and Rangeland Health*

The CIAA for livestock grazing include five federal grazing allotments (White River Bottoms, Coyote Wash, Antelope Draw, Seven Sisters, and Bonanza) which adjoin both the Project Area and the GCWPA. The CIAA comprises 213,446 acres. As indicated in **Table 4.9**, analyzed past and present actions have resulted in approximately 7,060 acres of surface disturbance within the CIAA. Foreseeable actions would result in approximately 10,557 acres of additional surface disturbance within the CIAA. Implementation of the Proposed Action would add 728.1 acres of surface disturbance which would result in loss of vegetative cover and the potential for introduction of non-native species, both of which would degrade range carrying capacity. These effects would last until successful reclamation, to a level replicating the range carrying capacity prior to disturbance, is achieved. The No Action alternative would not contribute to an accumulation of impacts.

4.4.8 *Migratory Birds*

The CIAA for migratory birds is composed of UDWR Wildlife Management Units (WMUs) 8D (Bonanza) and 10A (Bitter Creek), comprising 1,930,624 acres. As indicated in **Table 4.9**, analyzed past and present actions have resulted in approximately 31,960 acres of surface disturbance within the CIAA. Foreseeable actions would result in approximately 45,199 acres of additional surface disturbance within the CIAA. Implementation of the Proposed Action would add 728.1 acres of surface disturbance, which would result in loss and fragmentation of existing migratory bird habitat. These effects would last until completion of reclamation of the disturbed surface. The No Action alternative would not contribute to an accumulation of impacts.

4.4.9 *Paleontological Resources*

The CIAA for paleontological resources is the GCWPA, comprising 42,027 acres. As indicated in **Table 4.9**, analyzed past and present actions have resulted in approximately 3,191 acres of surface disturbance within the CIAA. Foreseeable actions would result in approximately 6,765 acres of additional surface disturbance within the CIAA. As a result of proposed monitoring of bedrock excavations for this and other federal projects, it is not likely that implementation of the Proposed Action would result in incremental loss of important fossils or scientific information. The No Action alternative would not contribute to an accumulation of impacts.

4.4.10 *Threatened, Endangered, Proposed, or Candidate Plant Species*

The CIAA for special status plant species is the 2011 USFWS Uinta Basin hookless cactus potential habitat GIS polygons, comprising 517,631 acres. As indicated in **Table 4.9**, analyzed past and present actions have resulted in approximately 17,154 acres of surface disturbance within the CIAA. Foreseeable actions would result in approximately 31,470 acres of additional surface disturbance within the CIAA. While individual plants and populations would be avoided, implementation of the Proposed Action would add 728.1 acres of surface disturbance, which would result in a loss of potential cactus habitat and disruption of supporting pollinator habitat. These effects would last until completion of reclamation of the disturbed surface. The No Action alternative would not contribute to an accumulation of impacts.

4.4.11 *Surface Water Resources*

The CIAA for surface water resources is the Lower White River fourth order watershed, comprising 797,533 acres. As indicated in **Table 4.9**, analyzed past and present actions have resulted in approximately 17,917 acres of surface disturbance within the CIAA. Foreseeable actions would result in approximately 33,248 acres of additional surface disturbance within the CIAA. Implementation of the Proposed Action would add 728.1 acres of surface disturbance, which would result in some transport of sediment from disturbed surfaces, although transport would be mitigated by implementation of standard measures designed to reduce transport within the field. These effects would last until completion of reclamation of the disturbed surface. The No Action alternative would not contribute to an accumulation of impacts.

5 CONSULTATION AND COORDINATION

5.1 Persons, Groups, and Agencies Consulted

Persons or agency staff informally consulted during preparation of this analysis are listed as personal communications within the list of references. Likewise, informally acquired agency data are listed, as appropriate, in the references section.

5.1.1 *Endangered Species Act Section 7 Consultation*

Implementation of the Proposed Action **"may affect, but is not likely to adversely affect"** the Uinta Basin hookless cactus. Pursuant to Section 7 of the Endangered Species Act of 1973 and in conformance with 50 CFR Part 402.13, informal Section 7 consultation with USFWS was completed with concurrence on March 18, 2013.

5.1.2 *National Historic Preservation Act Section 106 Consultation*

Section 106 consultation under the National Historic Preservation Act was conducted in association with the numerous Class III cultural surveys conducted in the project area. A summary of those surveys is included in the Class I Review of EOG Resources, Inc's Proposed Uintah Gathering System in Township 9 South, Range 22 East, and Township 9 South, Range 23 East in Uintah County Utah. MOAC Report No. 13-009. Documentation is available in the VFO BLM office upon request.

5.1.3 *Government to Government Consultation*

Consultation for the Chapita Wells Stagecoach EIS area was initiated on January 11, 2006. No concerns were identified. However, a letter from the Pueblo of Laguna requested Reinitiation of consultation should cultural resources be found during the site specific review of individual applications. No new sites have been located.

5.1.4 *Summary of Public Participation*

A summary of the Proposed Action was posted to the BLM Environmental Notification Bulletin Board on April 17, 2012. As of May 25, 2012, no comments or inquiries had been received regarding the proposed project. A 15-day public comment period was provided for review of the draft EA from March 14 through March 29, 2013. No public comments were received.

5.2 List of Preparers

This EA was prepared by Petros Environmental Group, Inc., a third-party contractor working under the supervision of and at the direction of the staff of the Vernal Field Office. Preparers are indicated in **Table 5.1**. Members of the BLM ID Team are indicated in **Table 5.2**.

Table 5.1 List of Document Preparers

Name	Title	Sections Prepared
Joe Fetzer	Geologist	Cultural Resources; Livestock Grazing and Rangeland Health; Paleontology; Lands and Access
Richard Bell	Soils Scientist	Soils; Vegetation and Invasive Plants; Lands and Access
Chris Gayer	Wildlife Biologist, Grasslands Consulting, Inc.	Fish and Wildlife; Migratory Birds; Threatened, Endangered, Proposed, or Candidate Plant Species; Threatened, Endangered, Proposed, or Candidate Animal Species

Table 5.2 BLM Interdisciplinary Team Members

Name	Title	Area of Responsibility
Nate Packer	Natural Resource Specialist	ID Team leader
Cameron Cox	Archaeologist	Cultural resources
Maggie Marston	Range Management Specialist	Livestock grazing, rangeland health standards
Elizabeth Gamber	Geologist	Paleontology
Daniel Emmett	Wildlife Biologist	Fish and wildlife, migratory birds
Katie Nash	Realty Specialist	Lands and access
Aaron Roe	Botanist	Vegetation, invasive plants, noxious weeds, and special status plant species
Steve Strong	Natural Resource Specialist	Soils

6 References

Allen, P.S., and S.E. Meyer. 2002. Ecology and Ecological Genetics of Seed Dormancy in Downy Brome. Weed Science, 50: 241-247.

Beck, Lisa. 2012. E-mail Communication with Lisa Beck Regarding SHPO Response to Submitted Archaeological Inventory Report, Archaeologist, Utah School and Institutional Trust Lands Administration, Salt Lake City, Utah, May 29, 2012.

Bosworth, William. 2003. Vertebrate Information Compiled by the Utah Natural Heritage Program: A Progress Report, Publication 03-45, Utah Division of Wildlife Resources, Salt Lake City, Utah.

Clean Air Status and Trends Network (CASTNET). 2012. Sulfur and Nitrogen Deposition at Canyonlands National Park Monitor, Clean Air Status and Trends Network, U.S. Environmental Protection Agency, Washington, D.C.

DelBozque, Jessica. 2011. Cultural Resource Inventory of EOG Resources Inc's 923-16 Block Parcel in Section 16, Township 9S, Range 23E, Uintah County, Utah, Report 11-367, Montgomery Archaeological Consultants, Inc., Moab, Utah.

Ellis, J. 2012. Uintah County Roads Department. Traffic Count Summary for County Roads Accessing the Chipeta Wells Unit Liquids Gathering System Project Area provided by Mr. Jeff Ellis via email message dated February 23, 2012.

Energy Information Administration (EIA). 2008. Greenhouse Gases, Climate Change, and Energy. Online data retrieved from http://www.eia.doe.gov/bookshelf/brochures/greenhouse/Chapter1.htm.

ENVIRON International Corporation (ENVIRON). 2009. Development of 2012 Oil and Gas Emissions Estimates for the Uinta Basin, ENVIRON International Corporation, Novato, California. Online data retrieved from http://www.wrapair.org/forums/ogwg/documents/2009-03_12_Projection_Emissions_Uinta_Basin_Technical_Memo_03-25.pdf .

ENVIRON International Corporation (ENVIRON). 2012. Development of Emissions Inventory for the Greater Chapita Wells Natural Gas Infill Project Environmental Impact Statement, ENVIRON International Corporation, Novato, California.

ENVIRON International Corporation (ENVIRON). 2013. Construction Emissions Inventory for the Proposed Chapita Wells Unit Phase 1 Liquids Gathering System, Environ International Corporation, Novato, California.

EOG Resources, Inc. 2009. EOG Resources, Inc. Reclamation Plan for Activities in the Vernal Field Office, EOG Resources, Denver, Colorado

Federal Land Manager's Air Quality Related Values Workgroup (FLAG). 2000. Phase I Report, U.S. Forest Service Air Quality Program, National Park Service Air Resources Division, and U.S. Fish and Wildlife Service Air Quality Branch.

Fitzgerald, J.P, C.A. Meaney, and D.M. Armstrong. 1994. Mammals of Colorado, University Press of Colorado Publishing, Niwot, Colorado. 467 pp.

Fogg, Jim and Heidi Hadley. 2007. Hydraulic Considerations for Pipelines Crossing Stream Channels, Technical Note 423, U.S. Bureau of Land Management, National Science and Technology Center, Denver, Colorado.

Goodrich, S., and E Neese. 1986. Uinta Basin Flora. USDA Forest Service- Intermountain Region- Ogden, Utah 1986 in cooperation with USFS- Ashley National Forest & USDOI BLM - Vernal District. 320pp.

Grasslands Consulting. 2011. Construction of the Phase 1A, Phase 1B, Phase 1C, and Phase 1D Pipelines, Report EOG-325, Grasslands Consulting, Denver, Colorado.

Gunnell, Gregg and William Bartels. 1999. Middle Eocene Vertebrates from the Uinta Basin, Utah, and their Relationship with Faunas from the Sourhtern Green River Basin, Wyoming, in Vertebrate Paleontology in Utah, David D. Gillette, editor, Miscellaneous Publication 99-1, Utah Geological Survey. Salt Lake City, Utah.

Interagency Monitoring of Protected Visual Environments (IMPROVE). 2012. Monitor Locations of the IMPROVE Network, Colorado State University, Ft. Collins, Colorado. Online data retrieved from http://vista.cira.colostate.edu/improve/, September 17, 2012.

Intergovernmental Panel on Climate Change (IPCC). 2007. Climate Change 2007: The Physical Basis (Summary for Policymakers). Cambridge University Press. Cambridge, England and New York, New York. http://www.ipcc.ch/pdf/assessment-report/ar4/wg1/ar4-wg1-spm.pdf

Irving, D., B. Haines, and T. Modde. 2004. White River Base Flow Study, Colorado and Utah, 1995-1996. Draft Report, Management Assistance Office, U.S. Fish and Wildlife Service, Vernal, Utah.

Johnsgard, P. A. 1990. Hawks, Eagles & Falcons of North America. Smithsonian Institute Press, Washington, D.C.

Leishman, G., R. Fish, and R. Lewis. 2003. Soil Survey of Uintah Area, Utah - Parts of Daggett, Grand, and Uintah Counties, Natural Resources Conservation Service, Lakewood, Colorado.

Lentsch, L. D., B. G. Hoskins, and L. M. Lubomudrov. 2000. The White River and Endangered Fish Recovery: A Hydrological, Physical, and Biological Synopsis. Publication 00-37, Utah Division of Wildlife Resources, Salt Lake City, Utah.

Nature Serve. 2012. Natureserve Explorer: An Online Encyclopedia Of Life [web application].Version 4.2. NatureServe, Arlington, Virginia. Available http://www.natureserve.org/explorer . Online data retrieved July 10, 2012.

Paleobiology Database, The. 2012. North American Land Mammal Ages, online data retrieved from The Paleobiology Database, http://paleodb.org/cgi-bin/bridge.pl?action=processViewScale&scale_no=10 February 10, 2012.

Parrish, J. R., F. P. Howe, R. E. Norvell. 2002. Utah Partners in Flight Avian Conservation Strategy Version 2.0. Utah Partners in Flight Program, Utah Division of Wildlife Resources, 1594 West North Temple, Salt Lake City, UT 84116, UDWR Publication Number 02-27. i–xiv + 302 pp.

Pellant, M. 1996. Cheatgrass: The Invader that Won the West, Bureau of Land Management, Idaho State Office, Boise, Idaho.

Rasmussen, D. T, G. Conroy, A. Friscia, K. E. Townsend, and M. Kinkel. 1999. Mammals of the Middle Eocene Uinta Formation, in Vertebrate Paleontology in Utah, David D. Gillette, editor, Miscellaneous Publication 99-1, Utah Geological Survey. Salt Lake City, Utah.

Romin, Laura and James Mauck. 2002. Utah Field Office Guidelines for Raptor Protection from Human and Land Use Disturbance, U.S. Fish and Wildlife Service, Utah Field Office, Salt Lake City, Utah.

Ruyle, G. and P. Ogden. 1993. What Is an A.U.M?, in Arizona Ranchers' Management Guide, 2002 Revisions, Department of Agricultural Resource Economics, University of Arizona, Tucson, Arizona. Online data retrieved from http://ag.arizona.edu/AREC/pubs/rmg/ranchers.html. July 13, 2009.

Sandau, S. 2009. Paleontological Environmental Assessment Report for the Greater Chapita Wells Project Area, Consulting Paleontologist, Intermountain Paleo-Consulting. Vernal, Utah.

Sandau, S. 2011. Survey of EOG's Proposed Phase 1C Pipeline, Sections 24 & 25, T9S, R22E, Paleontological Survey Report, Intermountain Paleo-Consulting, Vernal, Utah.

Sandau, S. 2012. Survey of EOG's Proposed "Phase 1A Pipeline" (Sec. 14, 15, & 22-24, T 9 S, R 22 E) & (Sec. 16, 19, 21, 29 & 30, T 9 S, R 23 E), Paleontological Survey Report, Intermountain Paleo-Consulting, Vernal, Utah.

Sandau, S. 2012a. Survey of EOG's Proposed "Gathering System in 923-16" (Sec. 16, T 9 S, R 23 E), Paleontological Survey Report, Intermountain Paleo-Consulting, Vernal, Utah.

Sandau, S. 2012b. Survey of EOG's Proposed "Phase 1B Pipeline" (Sec. 15, 22, 23, 25 & 26, T 9 S, R 22 E), Paleontological Survey Report, Intermountain Paleo-Consulting, Vernal, Utah.

Sandau, S. 2012c. Survey of EOG's Proposed "Phase 1D Pipeline" (Sec. 28, 29 & 33, T 9 S, R 23 E), Paleontological Survey Report, Intermountain Paleo-Consulting, Vernal, Utah.

Sandau, S. 2012d. Survey of EOG's Proposed "Phase 1E Pipeline" (Sec. 25 & 26, T 9 S, R 22 E), Paleontological Survey Report, Intermountain Paleo-Consulting, Vernal, Utah.

Sheley, R., M. Manoukian, and G. Marks. 1996. Preventing Noxious Weed Invasion. Rangelands. 18:100-101.

Sprinkel, D. A. 2007. Interim Geologic Map of the Vernal 30' x 60' Quadrangle, Uintah and Duchesne Counties, Utah, and Moffat and Rio Blanco Counties, Colorado, Open File Report 506DM, Utah Geological Survey. Salt Lake City, Utah. Includes GIS data.

Sprinkel, D. A. 2009. Progress Report Geologic Map of a Part of the Seep Ridge 30' x 60' Quadrangle, Uintah, Duchesne, and Carbon Counties, Utah and Rio Blanco and Garfield Counties, Colorado, Open File Report 549. Utah Geological Survey, Salt Lake City, Utah.

State Institutional Trust Lands Administration (SITLA). 2008. Map of Paleo-Sensitive Trust Lands, State Institutional Trust Lands Administration, Salt Lake City, Utah. Online data retrieved from ftp://lands-ftp.state.ut.us/pub/download/data/PaleoSensitivityMap.pdf, February 16, 2012.

State Institutional Trust Lands Administration (SITLA). 2012. Online Mapping Data, State Institutional Trust Lands Administration, Salt Lake City, Utah. Online data retrieved from , http://tlamap.trustlands.utah.gov/plat/MapViewer.aspx?mer=26&township=09.0S&range=23.0E&place=&classID=&number=&sufix=&layer=&actionType=townshipRange&selPlat=null, February 16, 2012.

Stokes, W. L. 1977. Physiographic Subdivisions of Utah, Map 43, Utah Geological and Mineral Survey, Salt Lake City, Utah.

Uintah County. 2005. Uintah County General Plan. Uintah County Board of Commissioners, Uintah County Planning Commission. Vernal, Utah.

U.S. Bureau of Land Management (BLM). 1985. Record of Decision and Rangeland Program Summary for the Book Cliffs Resource Management Plan, Vernal Field Office, Vernal, Utah.

U.S. Bureau of Land Management (BLM). 1997. Standards for Rangeland Health and Guidelines for Grazing Management for BLM in Utah, Utah State Office, Salt Lake City, Utah.

U.S. Bureau of Land Management (BLM). 2007. Potential Fossil Yield Classification (PFYC) System for Paleontological Resources on Public Lands, Instructional Memorandum 2008-009. Washington Field Office, Washington, D.C.

U.S. Bureau of Land Management (BLM). 2007a. Programmatic Environmental Impact Statement Vegetation Treatments Using Herbicides on Bureau of Land Management Lands in 17 Western States. Bureau of Land Management Rangeland, Soils, Water, and Air Group, BLM/WO/GI-07/018+6711. Washington. DC. Available online at www.blm.gov.

U.S. Bureau of Land Management (BLM). 2008. Vernal Field Office Record of Decision and Approved Resource Management Plan, Vernal Field Office, Vernal, Utah.

U.S. Bureau of Land Management (BLM). 2008b. Chapita Wells-Stagecoach Area Natural Gas Development Project FEIS and Record of Decision, Vernal Field Office, Vernal, Utah.

U.S. Bureau of Land Management (BLM). 2008c. Vernal Field Office Proposed Resource Management Plan Final Environmental Impact Statement, Vernal Field Office, Vernal, Utah.

U.S. Bureau of Land Management (BLM) 2008d. XTO Energy's River Bend Unit Infill Development Environmental Assessment and Biological Assessment. Environmental Assessment UT-080-07-772. Vernal Field Office, Vernal, Utah.

U.S. Bureau of Land Management (BLM). 2009a. Vernal RMP Maintenance Forms 2009, Vernal Field Office, Vernal, Utah. Online data retrieved from http://www.blm.gov/pgdata/etc/medialib/blm/ut/vernal_fo/planning/rod_approved_rmp.Par.38136.File.dat/maint13SSPlants.pdf, February 21, 2012.

U.S. Bureau of Land Management (BLM). 2009b. Green River District Reclamation Guidelines for Reclamation Plans, Instruction Memorandum 09-002, Green River District, Vernal, Utah.

U.S. Bureau of Land Management (BLM). 2011. Vernal Field Office GIS Data, Vernal Field Office, Vernal, Utah. March 2011.

U.S. Bureau of Land Management (BLM). 2011a. EOG's Proposed 11 Gas Well Directional Drilling Project Environmental Assessment (EA). DOI-BLM-UT-G010-2011-0157-EA, Vernal Field Office, Vernal, Utah.

U.S. Bureau of Land Management (BLM). 2012. Range Allotment Data, Online data available from the BLM Range Administration System, http://www.blm.gov/ras/. February 2012.

U.S. Bureau of Land Management (BLM). 2012a. LR2000 Land Records, Bureau of Land Management, Washington, D.C. Online data retrieved from http://www.blm.gov/lr2000/, February 20, 2012.

U.S. Bureau of Land Management (BLM). 2012b. Greater Uinta Basin Oil and Gas Cumulative Impacts Technical Support Document, March 2012, Vernal Field Office, Vernal, Utah. Online data retrieved from http://www.blm.gov/pgdata/etc/medialib/blm/ut/vernal_fo.Par.57849.File.dat/GCW%20Cums%20TSD%2003-22-12%20final.pdf

U.S. Bureau of Land Management (BLM). 2012c. Greater Natural Buttes Final Environmental Impact Statement, U.S. Bureau of Land Management, Vernal Field Office, Vernal, Utah.

U.S. Bureau of Land Management and U.S. Forest Service (BLM and USFS). 2007. Surface Operating Standards and Guidelines for Oil and Gas Exploration and Development ("Gold Book"), 4th Edition, Bureau of Land Management, Denver, Colorado.

U.S. Department of Agriculture (USDA), Soil Conservation Service (SCS). 1994. Utah Guide for Soil Survey Manuscripts. USDA SCS, Salt Lake City, Utah. March 18, 1994.

U.S. Department of Agriculture (USDA). 2012. Plants Database, U.S. Department of Agriculture, Washington, D.C. Online data retrieved from http://plants.usda.gov/java/, March 2012.

U.S. Department of Agriculture (USDA).2012a. Invasive and Noxious Weeds Website, Natural Resources Conservation Service. Accessed from http://plants.usda.gov/java/noxiousDriver . July 10, 2012.

U.S. Environmental Protection Agency (EPA). 2009 Uinta Basin Facility Emissions Data, AirData Website, U.S. Environmental Protection Agency, Washington, D.C. Online data retrieved from http://www.epa.gov/airdata.html 2009.

U.S. Environmental Protection Agency (EPA). 2011. Uintah County, Utah 2011 Air Quality Index Values, U.S. Environmental Protection Agency, Washington, D.C. Online data retrieved from http://www.epa.gov/airdata, September 12, 2012.

U.S. Environmental Protection Agency (EPA). 2011a. 2011 Utah Ozone Monitor Values, AirData Website, U.S. Environmental Protection Agency, Washington, D.C. Online data retrieved from http://www.epa.gov/airdata/ad_rep_mon.html , September 17, 2012.

U.S. Environmental Protection Agency (EPA). 2012. National Ambient Air Quality Standards, U.S. Environmental Protection Agency, Washington, D.C. Online data retrieved from http://www.epa.gov/air/criteria.html, September 13, 2012.

U.S. Fish and Wildlife Service. 2002a. Bonytail (*Gila elegans*) Recovery Goals: Amendment and Supplement to the Bonytail Chub Recovery Plan. U.S. Fish and Wildlife Service, Mountain-Prairie Region (6), Denver, Colorado.

U.S. Fish and Wildlife Service. 2002b. Colorado Pikeminnow (*Ptychocheilus lucius*) Recovery Goals: Amendment and Supplement to the Colorado Squawfish Recovery Plan. U.S. Fish and Wildlife Service, Mountain-Prairie Region (6), Denver, Colorado.

U.S. Fish and Wildlife Service. 2002c. Humpback Chub (*Gila cypha*) Recovery Goals: Amendment and Supplement to the Humpback Chub Recovery Plan. U.S. Fish and Wildlife Service, Mountain-Prairie Region (6), Denver, Colorado.

U.S. Fish and Wildlife Service. 2002d. Razorback Sucker (*Xyrauchen texanus*) Recovery Goals: Amendment and Supplement to the Razorback Sucker Recovery Plan. U.S. Fish and Wildlife Service, Mountain-Prairie Region (6), Denver, Colorado.

U.S. Fish and Wildlife Service (USFWS). 2012. Uintah Basin Hookless Cactus Species Profile, U.S. Fish and Wildlife Service, Washington, D.C. Online data retrieved from http://ecos.fws.gov/speciesProfile/profile/speciesProfile.action?spcode=Q3N6, February 21, 2012.

U.S. Fish and Wildlife Service (USFWS). 2012a. Threatened and Endangered Species Potential Habitat GIS Data, U.S. Fish and Wildlife Service Utah Field Office, Salt Lake City, Utah.

U.S. Fish and Wildlife Service (USFWS). 2012b. Draft Energy Development Management Guidelines for *Sclerocactus wetlandicus* and *Sclerocactus brevispinus* Core Conservation Areas, U.S. Fish and Wildlife Service Utah Field Office, Salt Lake City, Utah.

U.S. Fish and Wildlife Service (USFWS). 2012d. Listing of Federally Listed, Proposed, and Candidate Species by County in Utah, U.S. Fish and Wildlife Service Utah Field Office, Salt Lake City, Utah. Online data retrieved from http://www.fws.gov/utahfieldoffice/endspp.html, May 25, 2012.

U.S. Fish and Wildlife Service (USFWS). 2012e. Species Profile Database, U.S. Fish and Wildlife Service, Washington, D.C. Online data retrieved from http://www.fws.gov/species/, May 30, 2012.

U.S. Geological Survey (USGS). 2003. Utah Watersheds GIS Data, U.S. Geological Survey, Reston, Virginia.

U.S. Geological Survey (USGS). 2004. Southwest Regional Gap Analysis GIS Data, U.S. Geological Survey, Reston, Virginia.

U.S. Geological Survey (USGS). 2012 National Water Information System, Surface water data for Utah. Online data retrieved from http://waterdata.usgs.gov/ut/nwis/annual/?referred_module=sw, September 25, 2012.

Utah Air Quality Board (UABQ). 2006. State Implementation Plan, Section VIII, Utah Air Quality Board, Salt Lake City, Utah.

Utah Division of Air Quality (UDAQ). 2011. 2011 Annual Report, Utah Division of Air Quality, Salt Lake City, Utah.

Utah Division of Water Quality (UDWQ). 2010. Draft 2010 Utah Integrated Report: 303(d) List of Impaired Waters, Utah Department of Environmental Quality, Salt Lake City, Utah.

Utah Division of Water Quality (UDWQ). 2010a. Draft 2010 Utah Integrated Report: Water Quality Assessment 305(b) Report, Utah Department of Environmental Quality, Salt Lake City, Utah.

Utah Division of Wildlife Resources (UDWR). 2011. GIS Wildlife Mapping Data, Utah Division of Wildlife Resources, Salt Lake City, Utah. Online data retrieved from http://gis.utah.gov/sgid-vector-download/utah-sgid-vector-gis-data-layers-by-category, February 22, 2012.

Utah Division of Wildlife Resources (UDWR). 2012. Utah's Federally Listed Threatened, Endangered, and Candidate Species, Utah Division of Wildlife Resources, Salt Lake City, Utah. Online data retrieved from http://dwrcdc.nr.utah.gov/ucdc/viewreports/te_list.pdf, February 20, 2012.

Utah Division of Wildlife Resources (UDWR). 2012a. Utah Sensitive Species List, Utah Division of Wildlife Resources, Salt Lake City, Utah. Online data retrieved from http://dwrcdc.nr.utah.gov/ucdc/viewreports/ssl101706.pdf, February 23, 2012.

Utah Division of Wildlife Resources (UDWR). 2012b. Utah Conservation Data Center, Utah Division of Wildlife Resources, Salt Lake City, Utah. Online data retrieved from http://dwrcdc.nr.utah.gov/ucdc/, May 30, 2012.

Utah Division of Wildlife Resources and U.S. Bureau of Land Management (UDWR and BLM). 2009. Raptor Nest GIS Mapping Data, Utah Division of Wildlife Resources, Salt Lake City, Utah, and BLM Vernal Field Office, Vernal, Utah.

Utah Native Plant Society (UNPS). 2012. Utah Rare Plant, Utah Native Plant Society. Online data retrieved from http://www.utahrareplants.org/rpg_species.html#All, February 20, 2012.

Utah Weed Control Association (UWCA). 2012. Online data retrieved from http://www.utahweed.org/, April 5, 2012.

Welsh, S.L., N.D. Atwood, S. Goodrich and L.C. Higgins. 1993. A Utah flora, Second edition, revised. Jones Endowment Fund, Monte L. Bean Life Science Museum, Brigham Young University, Provo, UT. (page 285-286)

Western Regional Climate Center (WRCC). 2012. Online data retrieved from http://www.wrcc.dri.edu/Climsum.html, March 5, 2012.

Woods, Allan, D. Lammers, S. Bryce, J. Omernik, R. Denton, M. Domeier, and J. Comstock. 2001. Ecoregions of Utah, U.S. Geological Survey, Reston, Virginia.

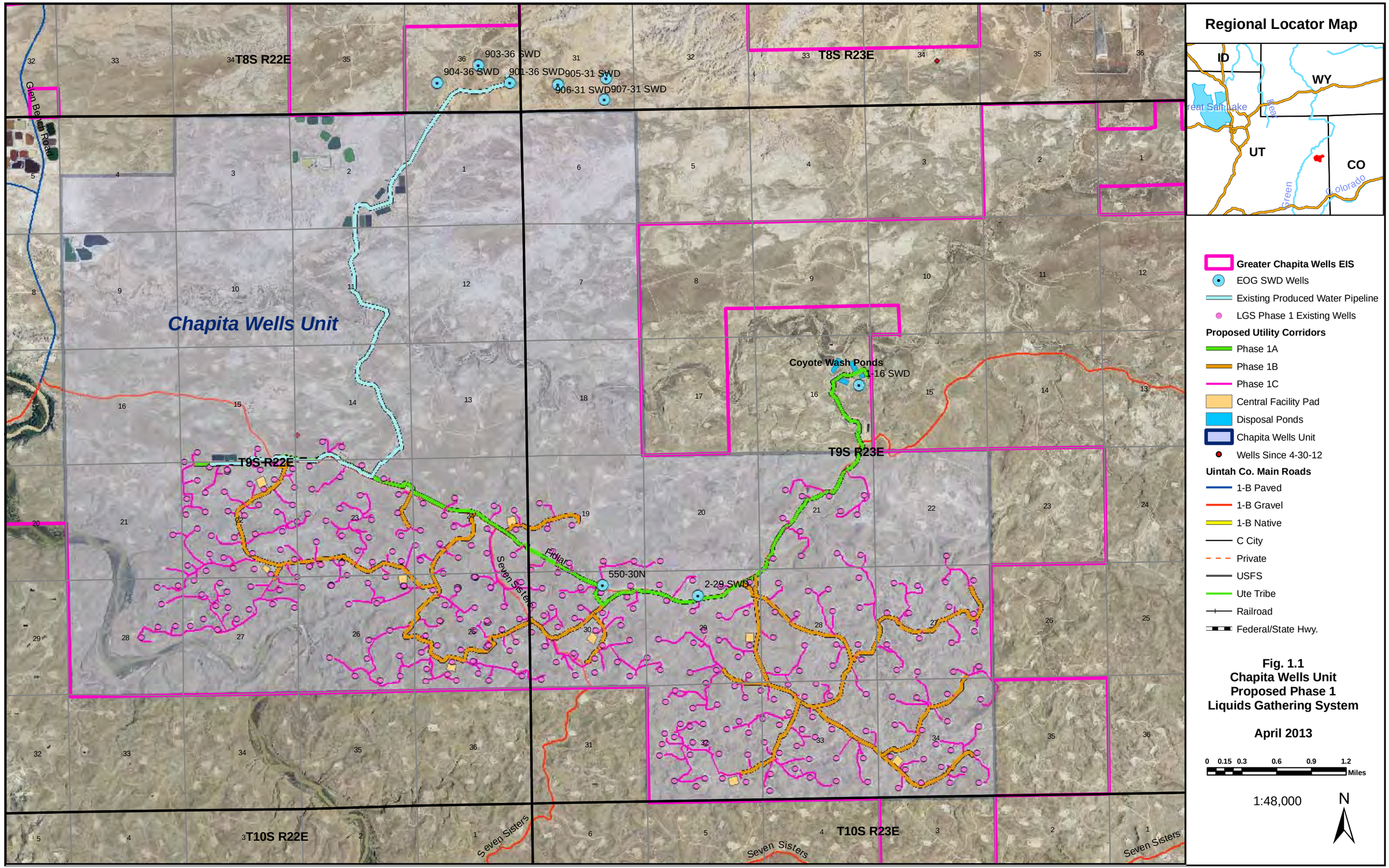

Fig. 1.1
Chapita Wells Unit
Proposed Phase 1
Liquids Gathering System

April 2013

Fig. 2.1

Phase 1A Trench Schematic

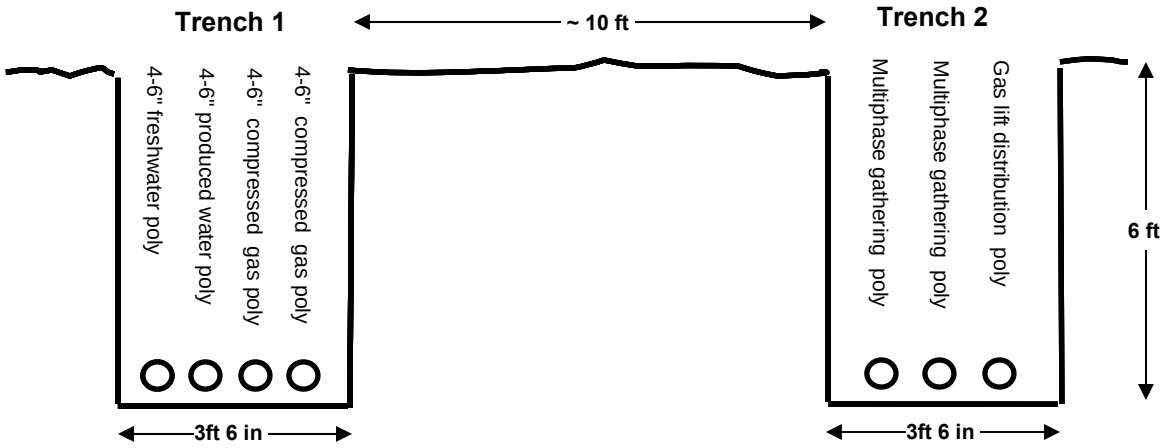

Phase 1B Trench Schematic

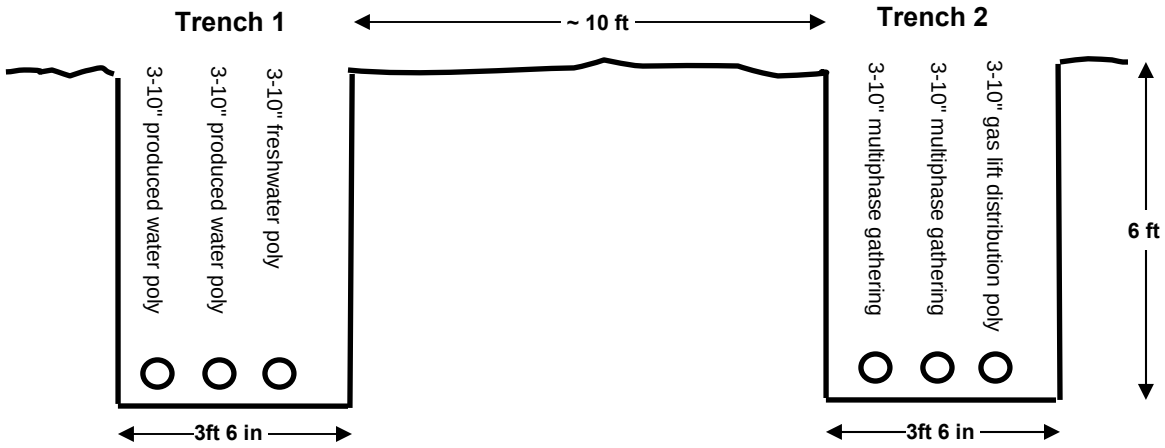

Phase 1C Trench Schematic

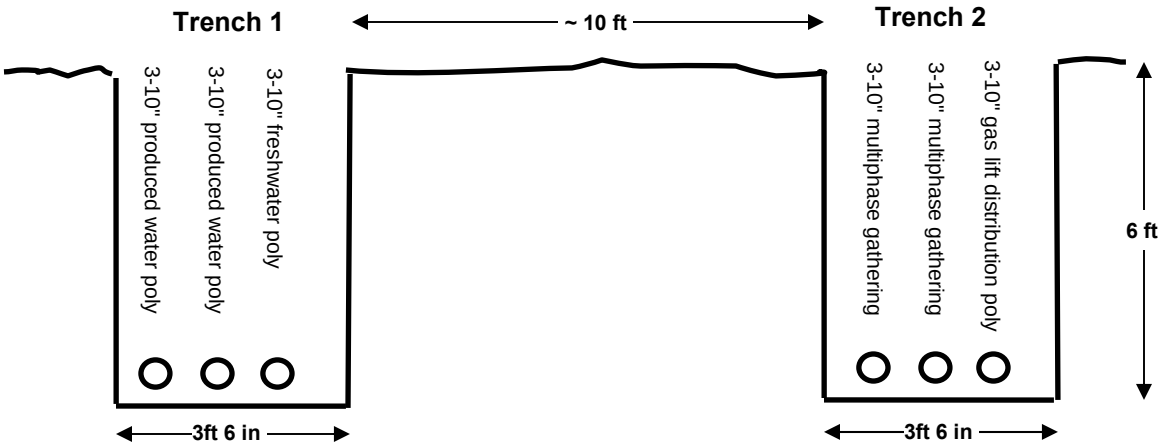

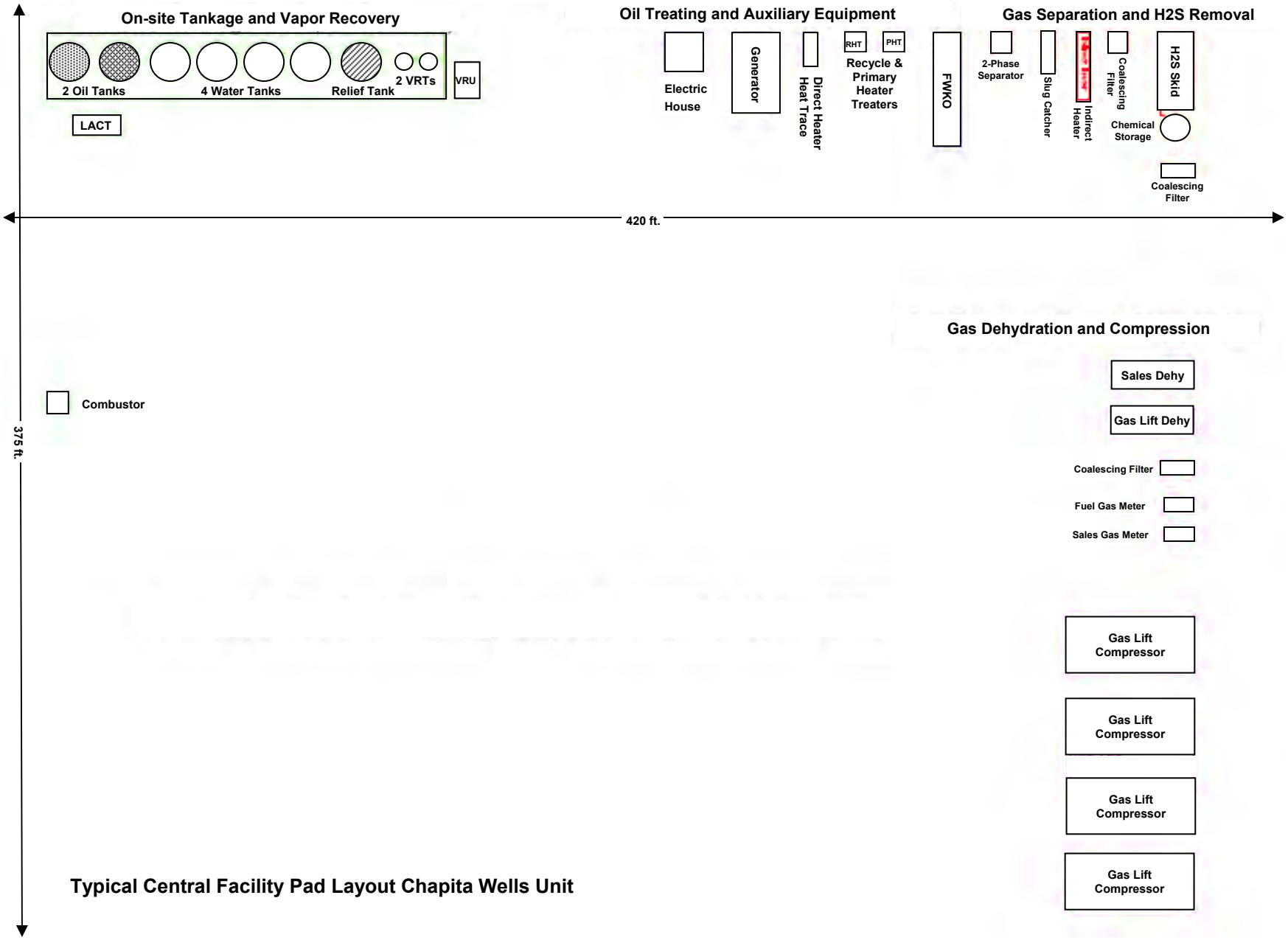

Typical Central Facility Pad Layout Chapita Wells Unit

Central Facility Flow Diagram
Chapita Wells Unit

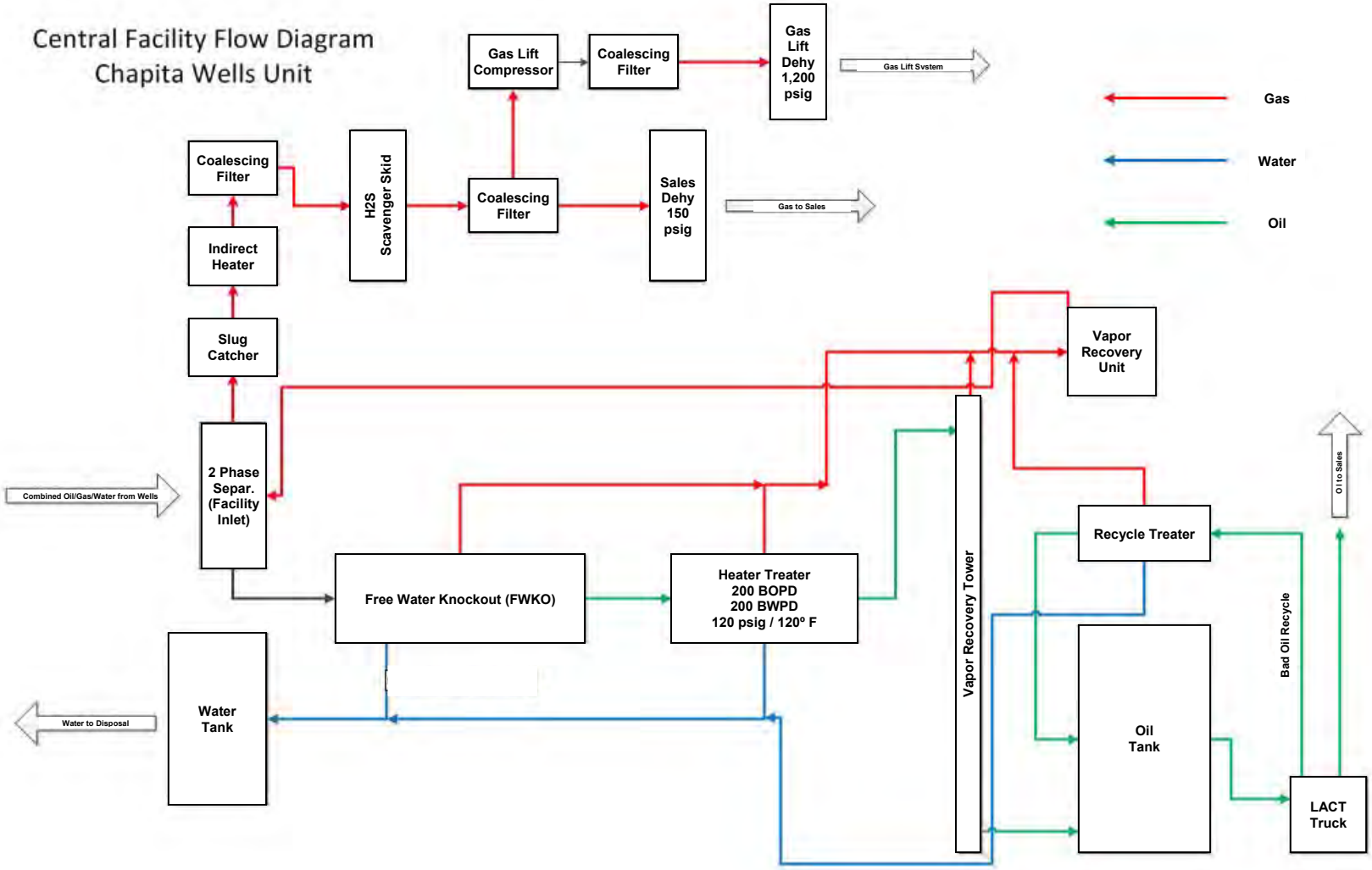

APPENDIX A

INTERDISCIPLINARY TEAM CHECKLIST

Project Title: EOG Liquid Gathering Project

NEPA Log Number: UT G010-2012-113

File/Serial Number:

Project Leader: Katie Nash/Nate Packer

DETERMINATION OF STAFF: ***(Choose one of the following abbreviated options for the left column)***

NP = not present in the area impacted by the proposed or alternative actions

NI = present, but not affected to a degree that detailed analysis is required

PI = present with potential for relevant impact that need to be analyzed in detail in the EA

NC = (DNAs only) actions and impacts not changed from those disclosed in the existing NEPA documents cited in Section D of the DNA form. The Rationale column may include NI and NP discussions.

Determi-nation	Resource	Rationale for Determination*	Signature	Date
RESOURCES AND ISSUES CONSIDERED (INCLUDES SUPPLEMENTAL AUTHORITIES APPENDIX 1 H-1790-1)				
PI	Air Quality	The overall effect of this project is anticipated to have a positive impact on Air Quality. This is due to the reduction in truck trips/well that which would reduce pollutants and fugitive dust.	Stephanie Howard	9/13/2012
NP	Areas of Critical Environmental Concern	None Present as per 2008 Vernal RMP/ROD GIS layer review	Jason West	1/17/2012
NP	BLM Natural Areas	None Present as per 2008 Vernal RMP/ROD GIS layer review	Jason West	1/17/2012
NI	BLM Sensitive Plant Species	Potential habitat for Yucca sterilis is present in the project area. However, no populations are present and the potential for future colonization is negligible.	Aaron Roe	1/2/2012
PI	Cultural Resources	Cultural resources determined to be eligible for inclusion in the National Register of Historic Places are identified within the APE of the proposed project area.	Cameron Cox	2/14/2012
NP	Environmental Justice	No minority or economically disadvantaged communities or populations would be disproportionately adversely affected by the Proposed Action or alternatives.	Nate Packer	2/6/12
NP	Farmlands (Prime or Unique)	No prime or unique farmlands for Uintah County as identified by the NRCS exist in the project area.	Nate Packer	2/6/12
PI	Fish and Wildlife Excluding USFWS Designated Species	Yearlong crucial antelope habitat has been designated as well as well as designated mule deer fawning in 26. All sections in T9S R23E are designated burrowing owl and white-tailed prairie dog habitat.	Daniel Emmett	09/10/12
NI	Floodplains	The proposed project does not cross any 100 year flood plains. It does come within 250 feet of the White River flood plain in T9S R 22E Sec 27, however it is approximately 220 feet above the river and all disturbed materials would be kept on the upslope side of the existing road.	Nate Packer	2/6/12

Determi-nation	Resource	Rationale for Determination*	Signature	Date
NI	Fuels/Fire Management	There are no planned fuels projects in the immediate area. Disturbance in Wyoming sagebrush vegetation type could increase the amount of invasive plants, specifically Bromus tectorum. The increase of Bromus tectorum could lead to an increase in fire frequency. Applying the Green River District Reclamation Guidelines should prevent additional hazardous fuels.	Blaine Tarbell	1/18/2012
NI	Geology / Mineral Resources/Energy Production	No known gilsonite veins are located in these sections, however, encounters with gilsonite during any construction must be reported to the BLM Vernal Field Office. Please provide location and depth encountered.	Elizabeth Gamber	2/3/2012
NI	Greenhouse Gas Emissions	It is anticipated based on the Greater Natural Buttes DEIS and SDEIS that greenhouse gas emissions associated with this action and its alternative(s) would be negligible. However the overall effect of this project is anticipated to have a positive impact on Greenhouse Gas Emissions. This is due to the reduction in truck trips/well that which would reduce Greenhouse Gas Emissions.	Stephanie Howard	9/13/2012
NI	Hydrologic Conditions (stormwater)	As analyzed in the Chapita Stagecoach EIS, surface disturbance caused by the construction of the ROWs would slightly alter surface water flow characteristics. Because construction techniques, and interim & final reclamation, follow gold book standards changes to surface water flow would be minimized.	Stephanie Howard	9/13/2012
PI	Invasive Plants/Noxious Weeds, Soils, and Vegetation	Potential for increased soil erosion following surface disturbance. Disturbance to native vegetation and creation of suitable habitat for the establishment and spread of non-native plants	Steve Strong Aaron Roe	1/18/2022 2/2/2012
PI	Lands/Access	All other utilities, facilities and roads will have to be taken into account. EOG Resources, Inc. would need to coordinate with the existing ROW holders and Uintah County during the implementation of the Proposed Action. BLM will notify all potentially affected ROW holders of the proposal and provide EOG Resources, Inc. a list of affected ROW holders. EOG will be required to hold ROWs for the water pipelines, gas pipelines and the proposed power line. The proposed power line would require a future amendment prior to being connected to a power source. Currently, the proposed power line would be buried and non-functional. EOG Resources, Inc. will coordinate with all ROW holders if any possible reroutes are anticipated, and the BLM will be notified of the reroutes. Revised maps will be submitted to the BLM with the proposed reroute, and include the length and width identified on the maps. If reroutes are outside of the proposed analyzed area, those areas and all documentation (clearances, permits, maps, reports, etc.) will be analyzed on a site specific basis before the reroutes can be authorized.	Katie Nash	09/07/2012

Determi-nation	Resource	Rationale for Determination*	Signature	Date
NP	Lands with Wilderness Characteristics (LWC)	None Present as per 2008 Vernal RMP/ROD GIS layer review	Jason West	1/17/2012
PI	Livestock Grazing	The proposal is within the Seven Sisters and Coyote Wash Allotments. These are both active sheep allotments. The proposal includes 728.1 acres of disturbance. This equates to the removal of approximately 79 AUM's for both of these allotments. Successful reclamation will make this a temporary removal of AUM's. The following range improvements are within or within close proximity of the proposed ROW: Robinson Corral T9S R23E Sec. 30 NWSW; Horsetrack Reservoir T9S R22E Sec. 24 SENW; proposal crosses Friendship Fence 5 times, 3 of the times near existing cattleguards: T9S R22E Sec. 27 SWNW; T9S R22E Sec. 22 SWSW; T9S R22E Sec. 22 NWSW; T9S R22E Sec. 27 NWNW (two crossings share this legal, they are within 1/8 mile of one another). Impacts to Range Improvements are to be avoided, if this is not possible coordinate with BLM for relocation or other mitigation measures.	Michael Cutler	1/18/2012
PI	Migratory Birds	Adverse impacts to migratory bird ground nesting habitat will occur by construction activities associated with the Proposed Action. There are several raptor nests within 0.50 mile including: golden eagle, prairie falcon, and several unknown nests.	Daniel Emmett	9/10/2012
NP	Native American Religious Concerns	No Traditional Cultural Properties are identified within the APE of the proposed project. The proposed project will not hinder access to or use of Native American religious sites.	Cameron Cox	2/14/2012
PI	Paleontology	Scientifically important fossils were found. A permitted paleontologist be must present to monitor the construction process of the proposed pipeline – Phases A to C (IPC #'s 177, 178, 179, and 180)	Elizabeth Gamber	2/3/2012
PI	Rangeland Health Standards	Rangeland Health Assessments have been assessed in both of the allotments affected by this proposal. A determination has been made that Coyote Wash Allotment is meeting Utah's Rangeland Health Standards and Guidelines. It is not likely that this proposal will affect the determination for the Coyote Wash Allotment. A determination has not been made for the Seven Sisters Allotment. Preliminary data suggests that Seven Sisters Allotment is not meeting Utah's Rangeland Health Standards and Guidelines primarily due to extensive natural gas development within the Seven Sisters Allotment.	Michael Cutler	1/18/2012
NI	Recreation	Generally recreation is not an activity that takes place within the proposed area; however, recreational white river boaters do access the area via system roads that are included within the proposed project area.	Jason West	1/17/2012

Determi-nation	Resource	Rationale for Determination*	Signature	Date
NI	Socio-Economics	The proposed project would reduce the amount of truck traffic in the project area which may result in fewer long term jobs, but due to the small percentage of traffic affected, and given the small size of this project in relation to ongoing development throughout the Uinta Basin, it is unlikely to result in a measureable social or economic impact to Uintah County.	Stephanie Howard	9/13/2012
NI	Threatened, Endangered or Candidate Animal Species	There are no federally listed TEC species present. All water will be recycled water therefore no analysis required.	Daniel Emmett	9/10/2012
PI	Threatened, Endangered, Proposed, or Candidate Plant Species	The proposed project is located within potential habitat for Uinta Basin hookless cactus. Surveys of 1-A to 1-C found no plants, however dispersed direct and indirect impacts may affect the species. Project May Affect, Is Not Likely to Adversely Affect	Aaron Roe	2/2/2012
NI	Visual Resources	VRM Class IV identified for proposed project area. VRM Class IV is the least restrictive visual resource management class. The class objective states, "The objective of this class is to provide for management activities which require major modification of the existing character of the landscape. The level of change to the characteristic landscape can be high. These management activities may dominate the view and be the major focus of viewer attention. However, every attempt should be made to minimize the impact of these activities through careful location, minimal disturbance, and repeating the basic elements.´ The proposed project meets VRM Class IV objectives.	Jason West	1/17/2012
NI	Wastes (hazardous or solid)	No chemicals subject to reporting under SARA Title III in amounts greater than 10,000 pounds would be used, produced, stored, transported, or disposed of annually in association with the project. Trash and other waste materials would be cleaned up and removed immediately after completion of operations. Wastes associated with natural gas exploration, development or production (produced water, drill cuttings, drillings fluids, etc.) are excluded from RCRA (40 CFR 261.4)	Nate Packer	2/6/12
NI	Waters of the U.S.	Impacts would be minimal considering the location of the project and that all stream channel crossings would be constructed in accordance to "Hydraulic Considerations for Pipelines Crossing Stream Channels" (Technical Note 423 April 2007). All impacts are as analyzed in the Chapita Wells-Stagecoach Area Natural Gas Development EIS.	Nate Packer	2/6/12

Determi-nation	Resource	Rationale for Determination*	Signature	Date
Surface-PI Ground-NI	Water Resources/Quality (surface/ground)	Surface Waters: The project area is near the White River. As far as site specifics are known, the proposed utility corridors do not cross any perennial or major ephemeral drainages. There is a potential for erosion of sediments into adjacent drainages during and following construction. In addition, there is a potential for leaks to run into adjacent drainages.Groundwater can be fairly shallow in this area, estimated to occur at about 20 ft or deeper. However, the proposed action is anticipated to go no deeper than 8 feet. Given the shallow depth to bedrock and the high potential for clay soils, both of which would restrict water movement in the event of a leak, it is not anticipated that a pipeline leak or spill would penetrate to the groundwater level.	Stephanie Howard Elizabeth Gamber	9/13/2012 2/3/2012
NP	Wetlands/Riparian Zones	No inventoried riparian areas are located at or near the project area and indirect impacts would not be expected.	Nate Packer	2/6/12
NP	Wild and Scenic Rivers	None Present as per 2008 Vernal RMP/ROD GIS layer review	Jason West	1/17/2012
NI	Wild Horses and Burros	The project area is within the Bonanza HA. There are no wild horses within the HA. Horses were completely removed from the HA by the BLM. Horses that are present are either considered estray, County, or Tribal animals	Dusty Carpenter	2.9.2012
NP	Wilderness/WSA	None Present as per 2008 Vernal RMP/ROD GIS layer review	Jason West	1/17/2012
NP	Woodland / Forestry	None present per GIS review.	David Palmer	2/9/2012

FINAL REVIEW:

Reviewer Title	Signature	Date	Comments
Environmental Coordinator	Stephanie Howard	4/4/13	
Authorized Officer	[illegible]	4/5/2013	

Appendix B

Emissions Calculations Methodology

Long-term Emissions

The estimates in the EA are based on work being done for the Chapita Wells EIS emissions inventory. ENVIRON International Corporation computed a separate estimate of the additional emissions to be derived from the EA Proposed Action central facilities. The calculation involves selecting the 364 existing wells that would be connected to phase 1 of the LGS, calculating the uncontrolled emissions and comparing to the much lower controlled emissions. Then, the emissions from the (up to) 14 proposed central facilities are added to get the net emissions reduction.

1. The well emissions were derived from the *Chapita_Exsting_Scenario_1_06.29.12.xlsx* emissions spreadsheet. Uncontrolled well emissions are summarized in the *Scenario_Uncentrlized* tab. Values were taken from year 2020, after the LGS is installed and facilities are electrified, for comparison purposes as those emissions are representative of the long-term for the project. Summary values in columns AC-AH were used. These values are for 717 uncontrolled wells from the EIS, vs. 364 existing wells in the LGS, so the values in the EA have been multiplied by a .508 scaling factor.

2. Controlled well emissions use the same row (year 2020) and columns from the *Scenario_Centralized* tab spreadsheet. These represent emissions from wells following imposition of controls from installing the LGS. Note that the totals are for 526 controlled wells (from the EIS), so for the phase 1 project, a 0.692 scaling factor was applied for the 364 existing LGS wells in the EA. The difference between 1. and 2. is the net reduction in emissions from the 364 Mesaverde wells included in the phase 1 LGS.

3. Finally, the projected emissions from 14 central facilities were added. These emissions are summarized in the *EA_CFs_Central_Facilities_Scenario1_Full_11.16.12.xlsx* spreadsheet. See the *Summary_Facility* tab spreadsheet. The 2015 numbers were used, which assumes full electrification of the central facilities. These emissions were added to the reductions from 1. and 2., above, to calculate the net emissions reduction.

Construction Emissions

Short-term construction emissions have been estimated using:

1. project-specific data obtained by EOG during construction of the pilot LGS on State lands in Section 16, Township 9 South, Range 23 East; and
2. standard EPA AP-42 methodology.

Detailed construction emissions calculations have been included in the *Chapita_LGS_construction_030613.xlsx* worksheet. The worksheet includes 15 separate linked spreadsheets used for estimating various types of construction operations and resultant emissions.

The spreadsheets indicated above are available in digital format from the Vernal Field Office upon request.