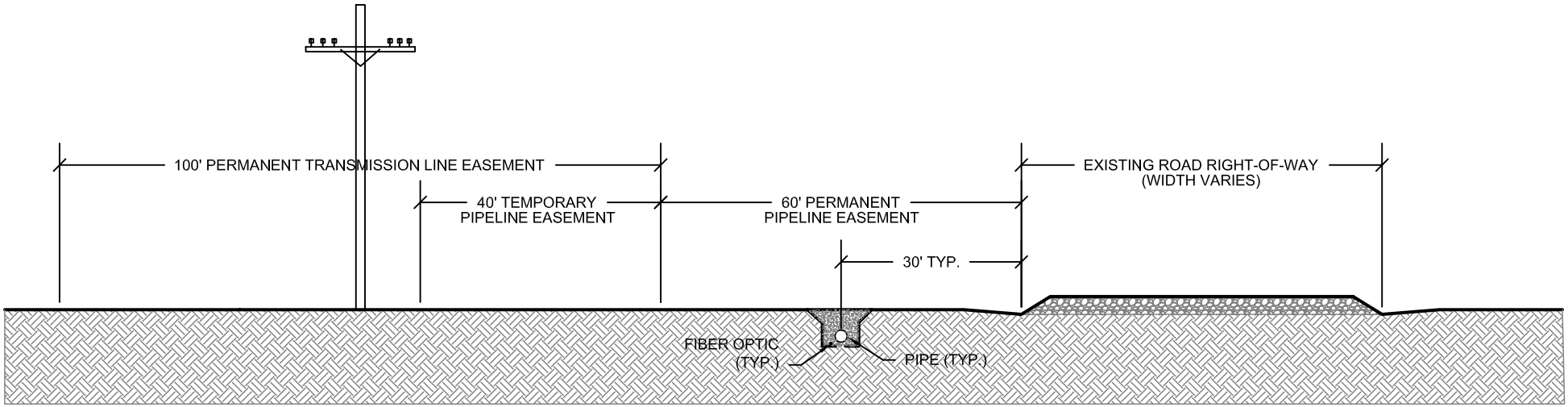

NOTES:

1. Water pipeline and transmission line may be on either side of existing road depending on site conditions and final design.
2. The transmission line may be on either side of the water pipeline pending final design.

Lincoln County Land Act Groundwater Development and Utility Right-of-Way Project EIS

Figure 2-1

Typical Utility Layout for Parallel Road Construction

Date: 02-21-2008	R:\projects\AZ002506-BLM-LincolnCo\PDF\ES_maps\Final_LCLA_ES_Figs\Jan_2008\Revised_Figures\Fig_2-1_Typical_Parallel_Road.pdf	REV. No. A

DRAFT

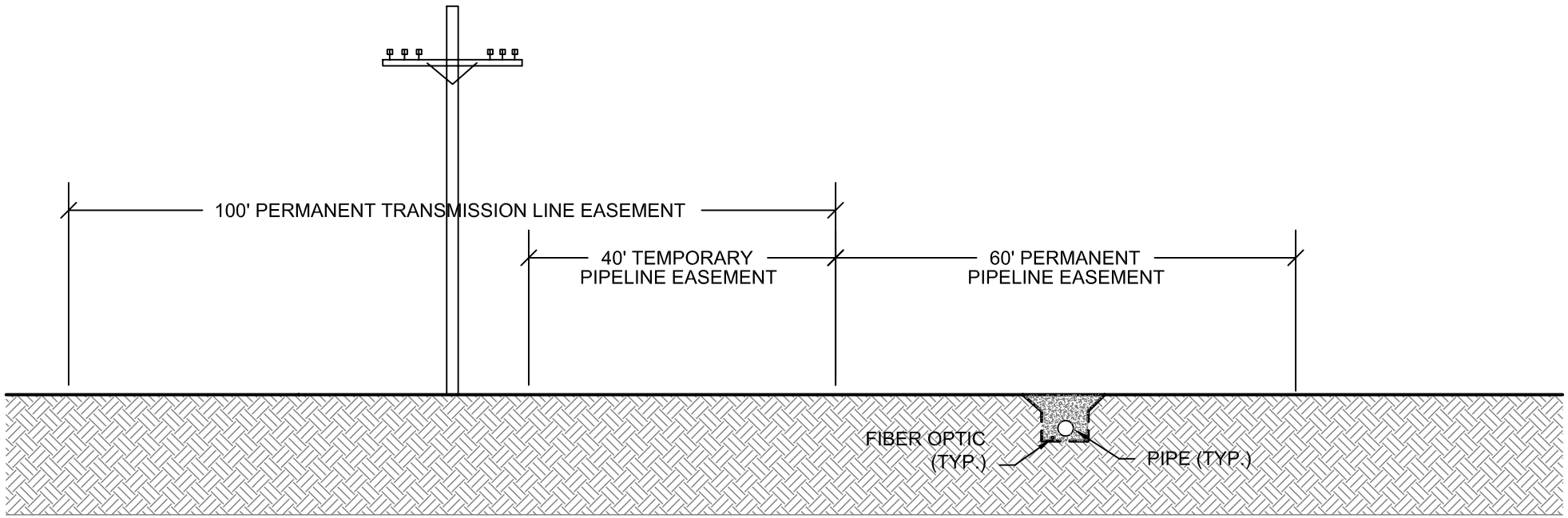

NOTES:

1. The temporary pipeline easement for construction may be on either side of the permanent pipeline easement or split on either side depending on site specific conditions and final design. To the extent possible, the temporary pipeline easement will overlap the 100' permanent transmission line easement.
2. The transmission line may be on either side of the water pipeline pending final design.

Lincoln County Land Act Groundwater Development and Utility Right-of-Way Project EIS

Figure 2-2

Typical Utility Layout for Cross-Country Construction

Date: 02-21-2008	R:\projects\AZ002506-BLM-LincolnCo\PDF\ES_maps\Final_LCLA_ES_Figs\Jan_2008\Revised_Figures\Fig_2-2_Typical_Cross_Country.pdf	REV. No. A

DRAFT

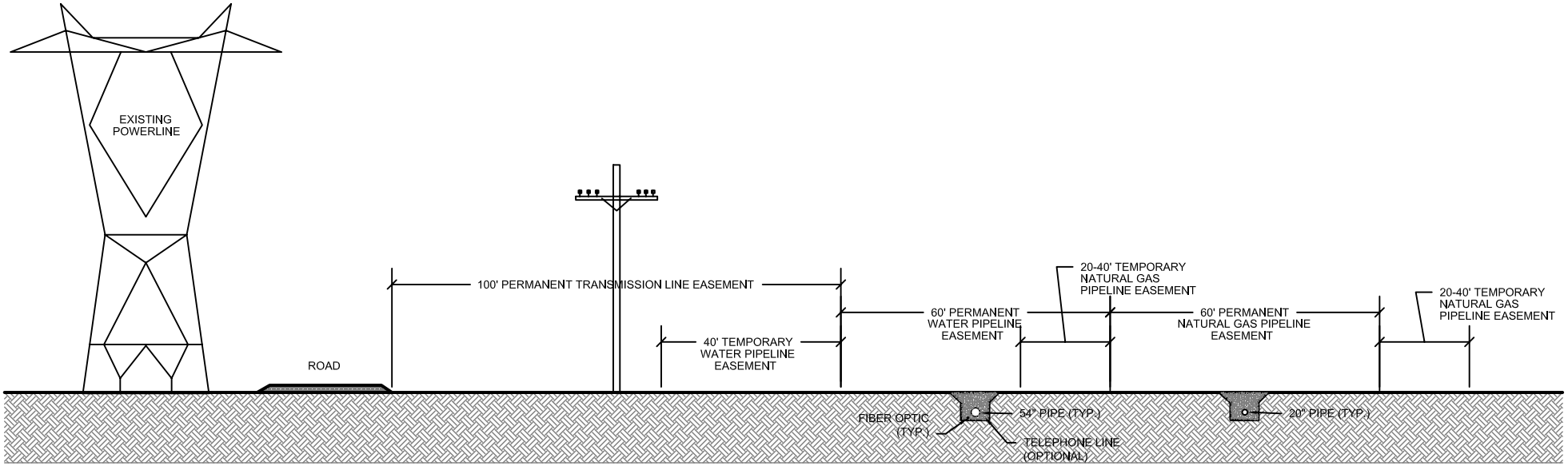

NOTES:

1. The temporary pipeline easement for construction may be on either side of the permanent pipeline easement or split on either side depending on site specific conditions and final design. To the extent possible, the temporary pipeline easement will overlap the 100' permanent transmission line easement.
2. The transmission line may be on either side of the water pipeline pending final design.
3. A reclaimed water line may also be installed within or adjacent to this corridor.
4. Easements and location of the natural gas pipeline will be specified in a separate POD.

Lincoln County Land Act Groundwater Development and Utility Right-of-Way Project EIS

Figure 2-3

Typical Layout of Project Components Within the Existing Right-of-Way East of the Proposed Toquop Power Plant

Date: 02-21-2008	R:\projects\AZ002506-BLM-LincolnCo\PDF\ES_maps\Final_LCLA_ES_Figs\Jan_2008\Revised_Figures\Fig_2-3_Project_Componenets.pdf	REV. No. A

DRAFT

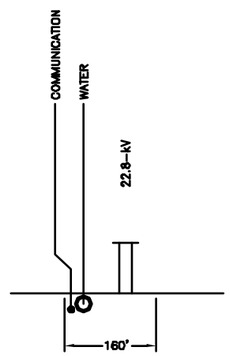

SECTION 1

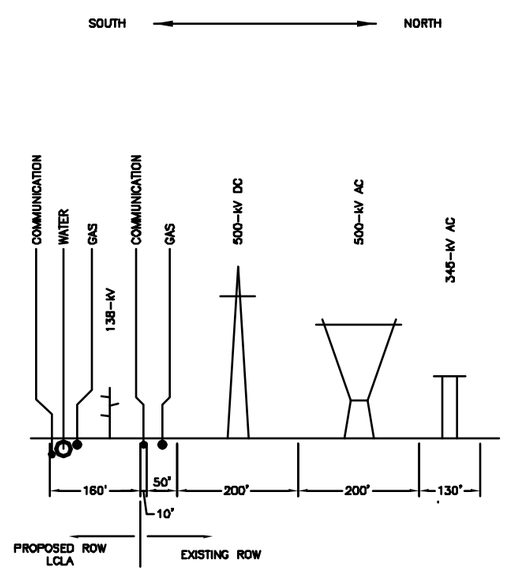

SECTION 2

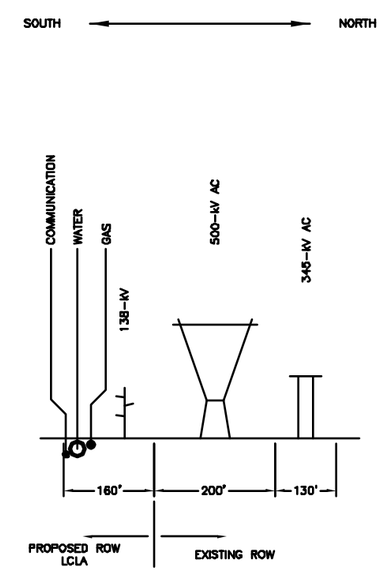

SECTION 3

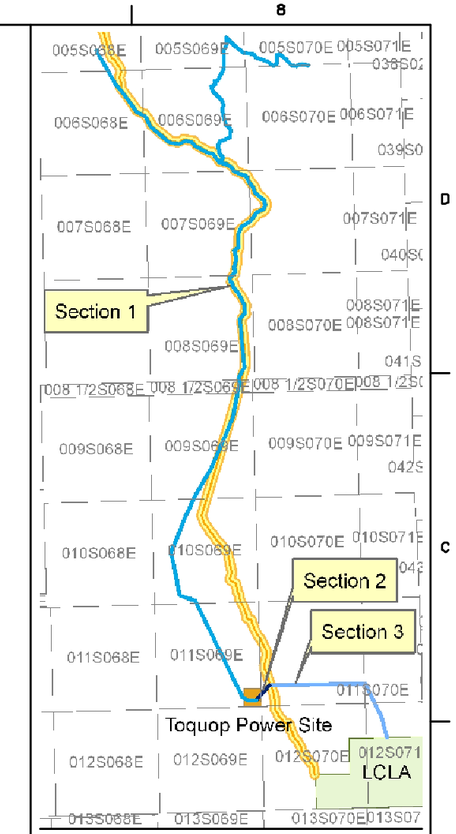

LOCATION MAP

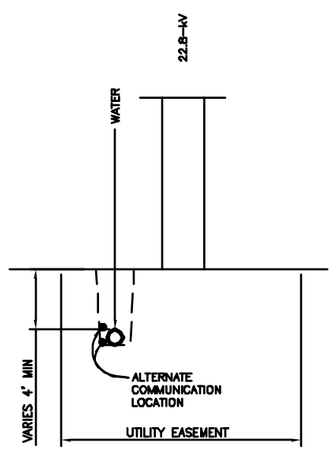

WATER, ELECTRIC, COMMUNICATION

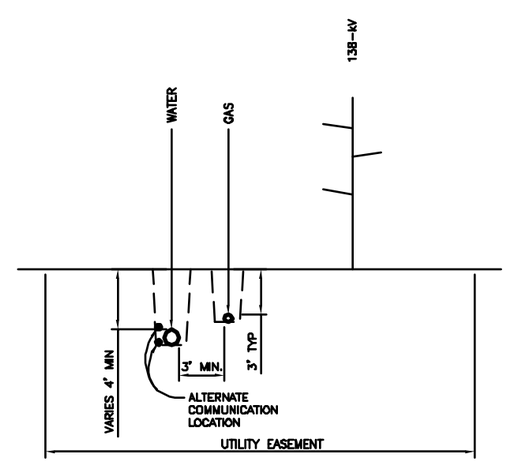

WATER, ELECTRIC, COMMUNICATION, GAS

TYPICAL UTILITY PLACEMENT

NTS

Source: HDR Engineering, 2007

DRAFT

Lincoln County Land Act Groundwater Development and Utility Right-of-Way Project EIS

Figure 2-4

Typical Utility Layout Within the Requested Right-of-Way

Date: 02-21-2008	R:\projects\AZ002506-BLM-LincolnCo\PDF\ES_maps\Final_LCLA_ES_Figs\Jan_2008\Revised_Figures\Fig_2-4_Typical_ROW.pdf	REV. No. A

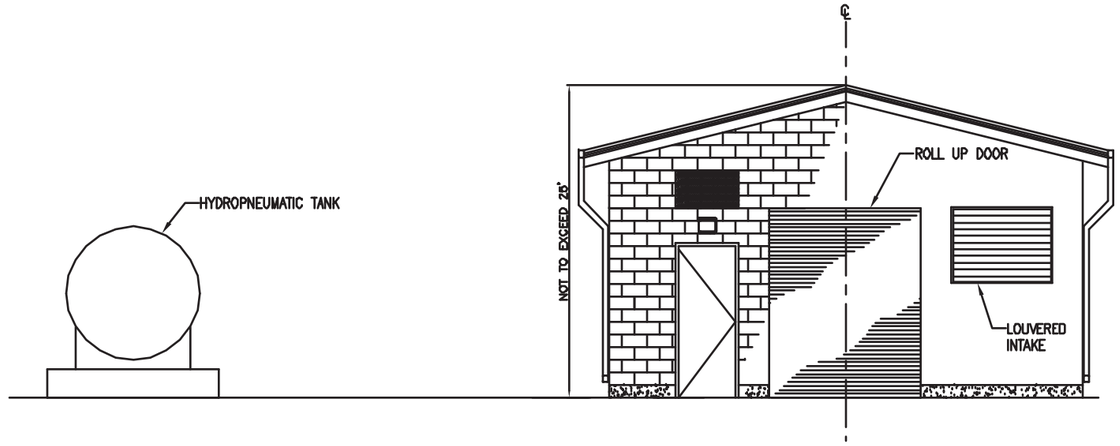

END ELEVATION

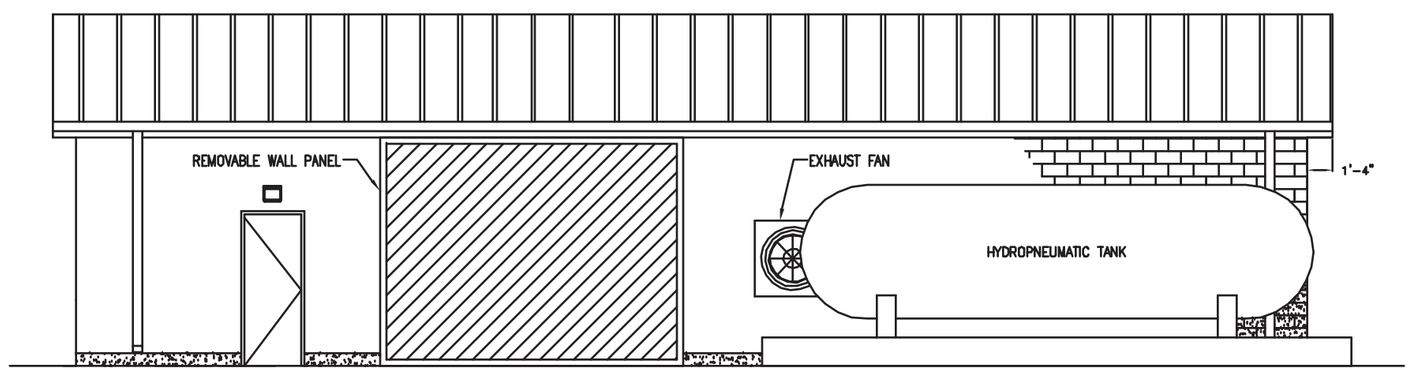

SIDE ELEVATION

Source: HDR Engineering, 2007

Lincoln County Land Act Groundwater Development and Utility Right-of-Way Project EIS

Figure 2-5

Typical Production Well House Building

DRAFT

Date: 02-21-2008	R:\projects\AZ002506-BLM-LincolnCo\PDF\ES_maps\Final_LCLA_ES_Figs\Jan_2008\Revised_Figures\Fig_2-5_Well_House.pdf	REV. No. A

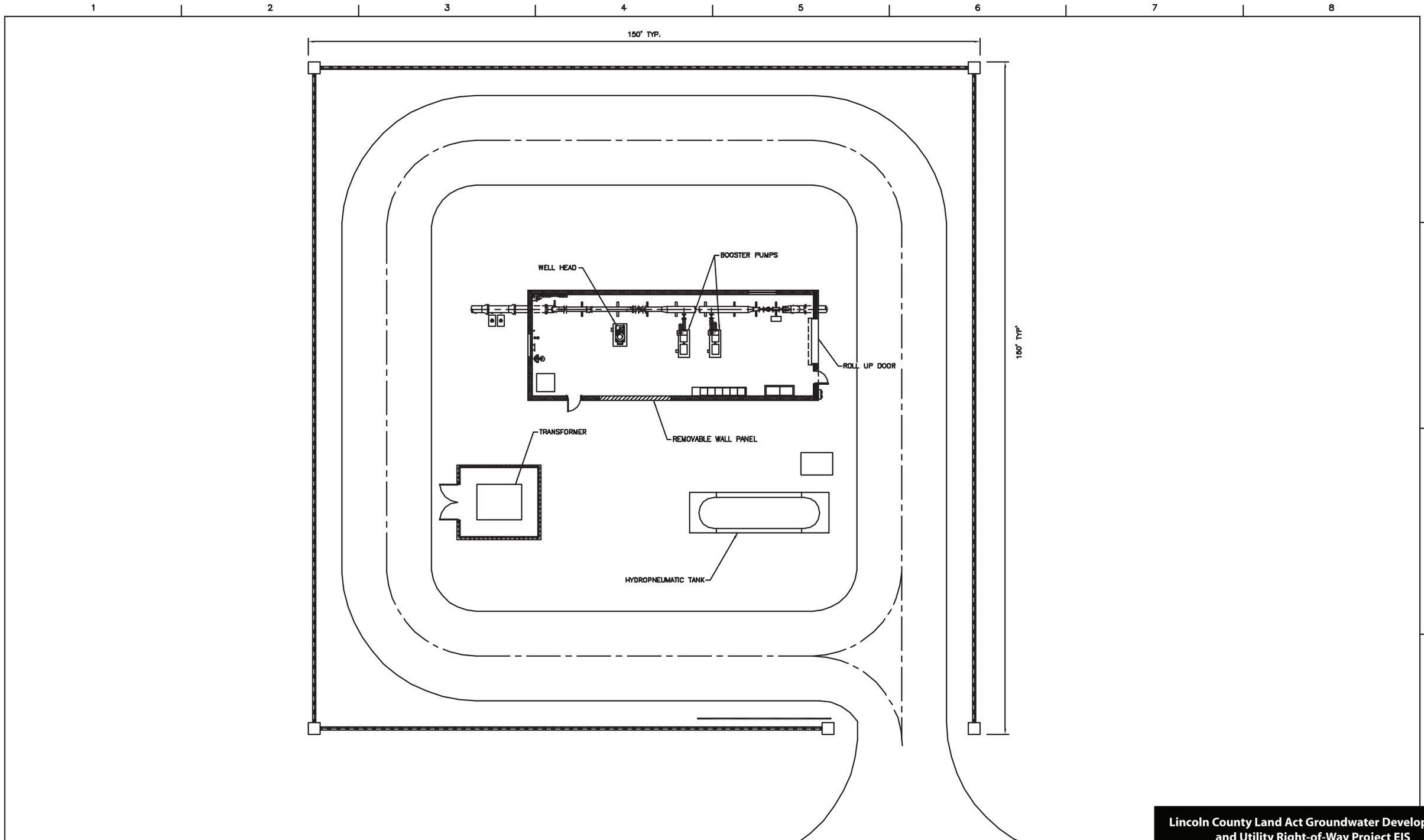

Source: HDR Engineering, 2007

Lincoln County Land Act Groundwater Development and Utility Right-of-Way Project EIS

Figure 2-6

Typical Production Well Facility Site Plan

DRAFT

Date: 02-21-2008	R:\projects\AZ002506-BLM-LincolnCo\PDF\ES_maps\Final_LCLA_ES_Figs\Jan_2008\Revised_Figures\Fig_2-6_Well_Facility.pdf	REV. No. A

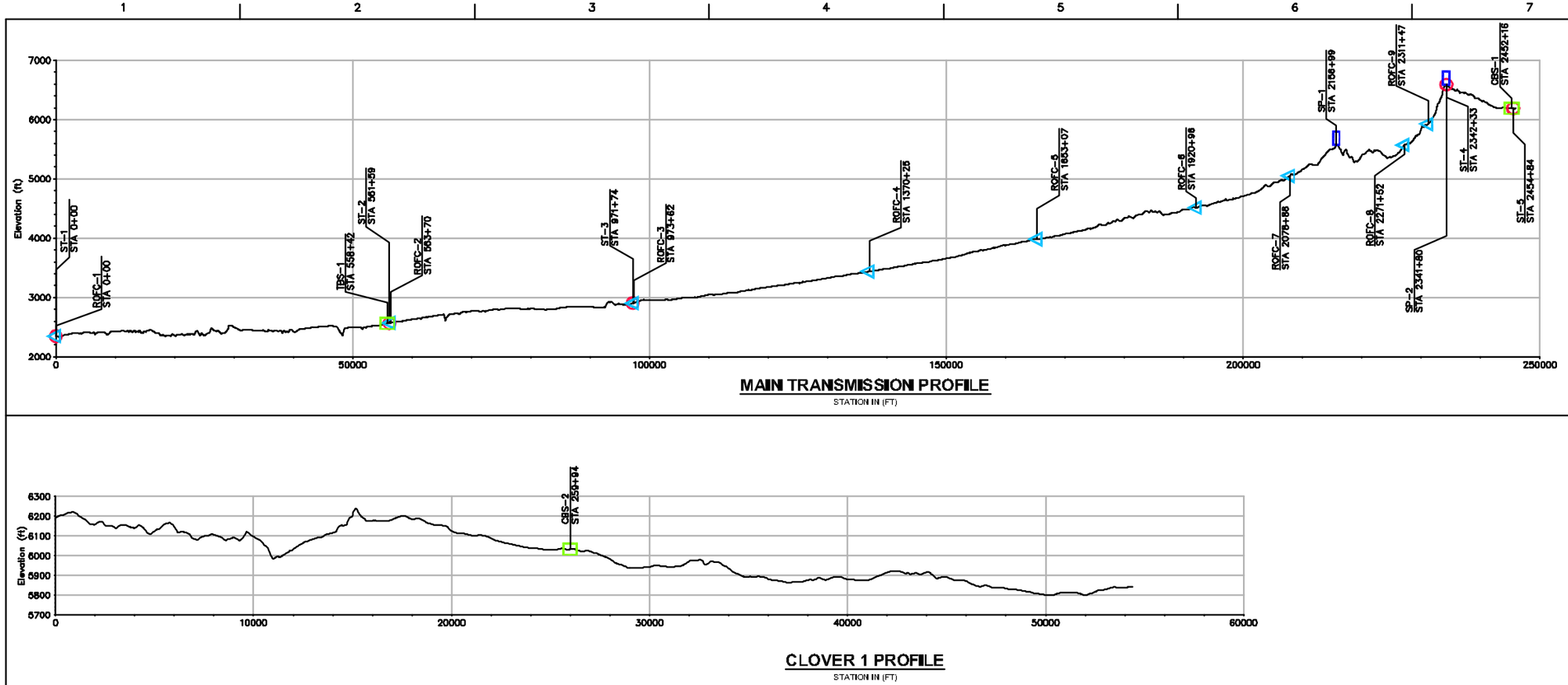

Source: HDR Engineering, 2007

DRAFT

Lincoln County Land Act Groundwater Development and Utility Right-of-Way Project EIS

Figure 2-7

Elevation Gains/Losses Within the Proposed ROW

Date: 02-21-2008	R:\projects\AZ002506-BLM-LincolnCo\PDF\ES_maps\Final_LCLA_ES_Figs\Jan_2008\Revised_Figures\Fig_2-7_Elevation.pdf	REV. No. A

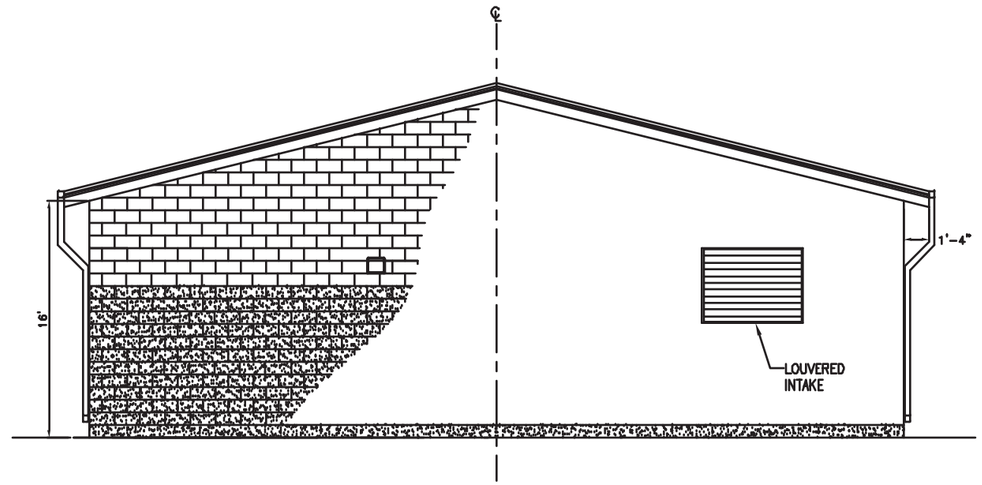

END ELEVATION

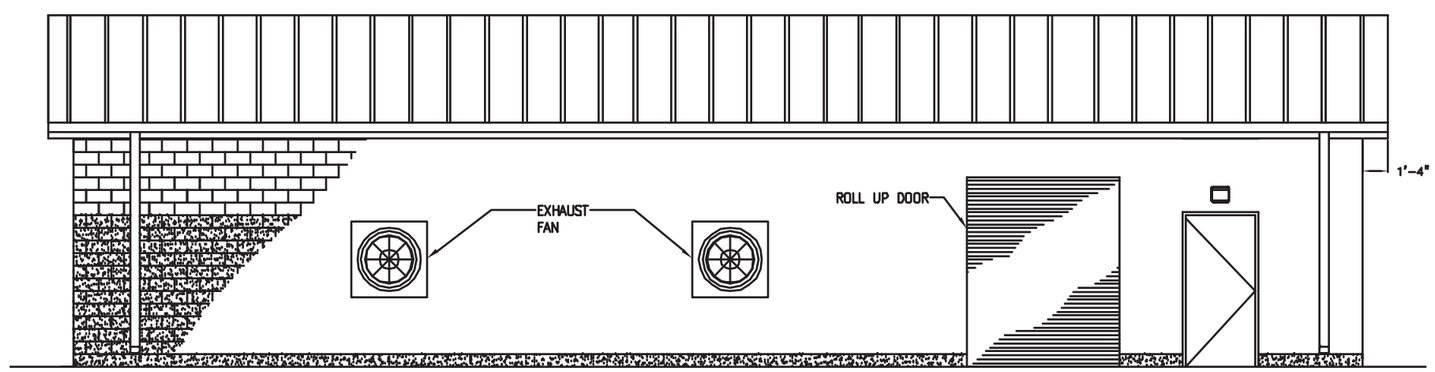

SIDE ELEVATION

Source: HDR Engineering, 2007

Lincoln County Land Act Groundwater Development and Utility Right-of-Way Project EIS

Figure 2-8

Typical Booster Station Building Layout

DRAFT

Date: 02-21-2008	R:\projects\AZ002506-BLM-LincolnCo\PDF\ES_maps\Final_LCLA_ES_Figs\Jan_2008\Revised_Figures\Fig_2-8_Booster_Station.pdf	REV. No. A

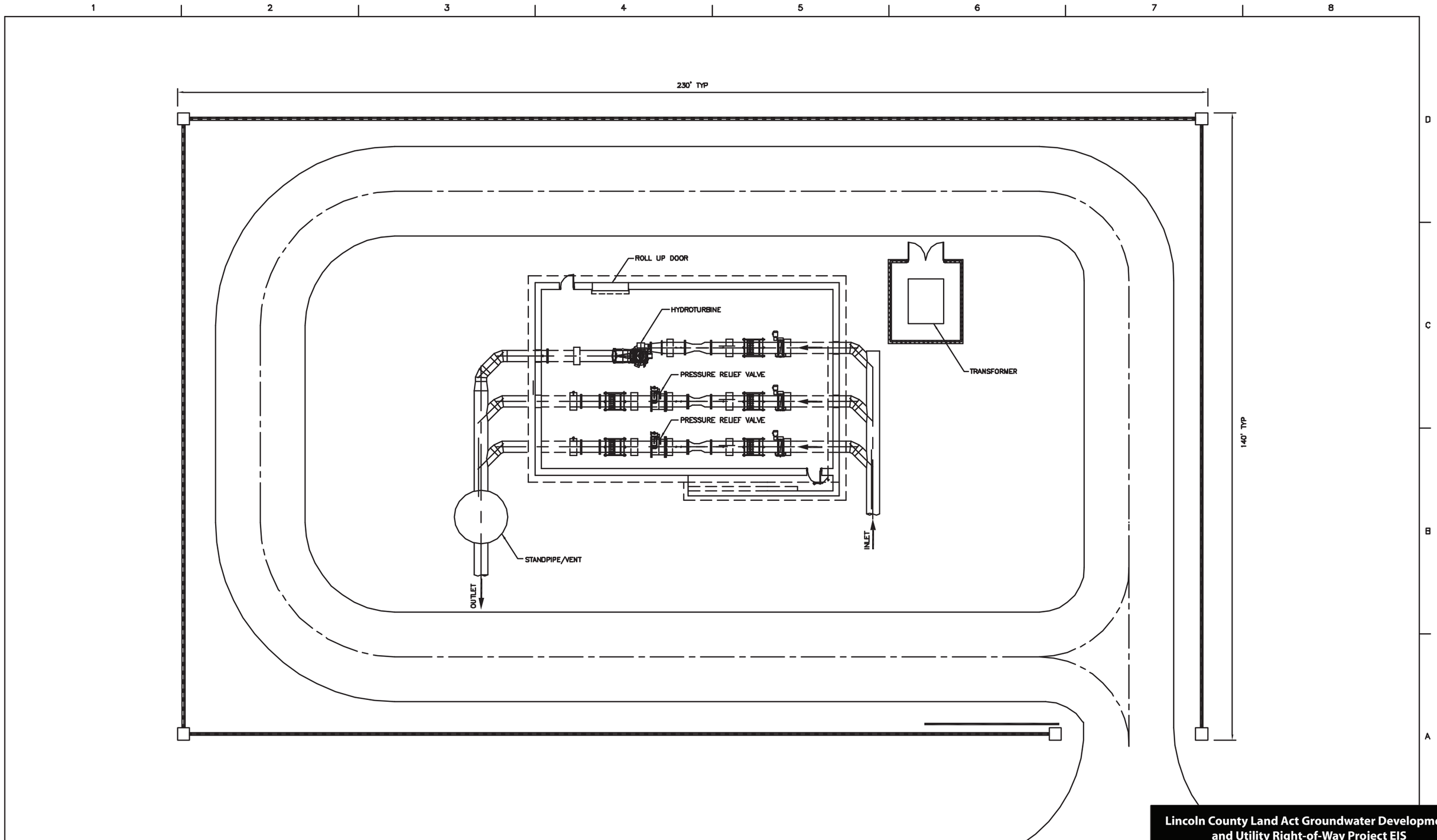

Source: HDR Engineering, 2007

Lincoln County Land Act Groundwater Development and Utility Right-of-Way Project EIS

Figure 2-9

Typical Flow Control Station

DRAFT

Date: 02-21-2008	R:\projects\AZ002506-BLM-LincolnCo\PDF\ES_maps\Final_LCLA_ES_Figs\Jan_2008\Revised_Figures\Fig_2-9_Flow_Control.pdf	REV. No. A

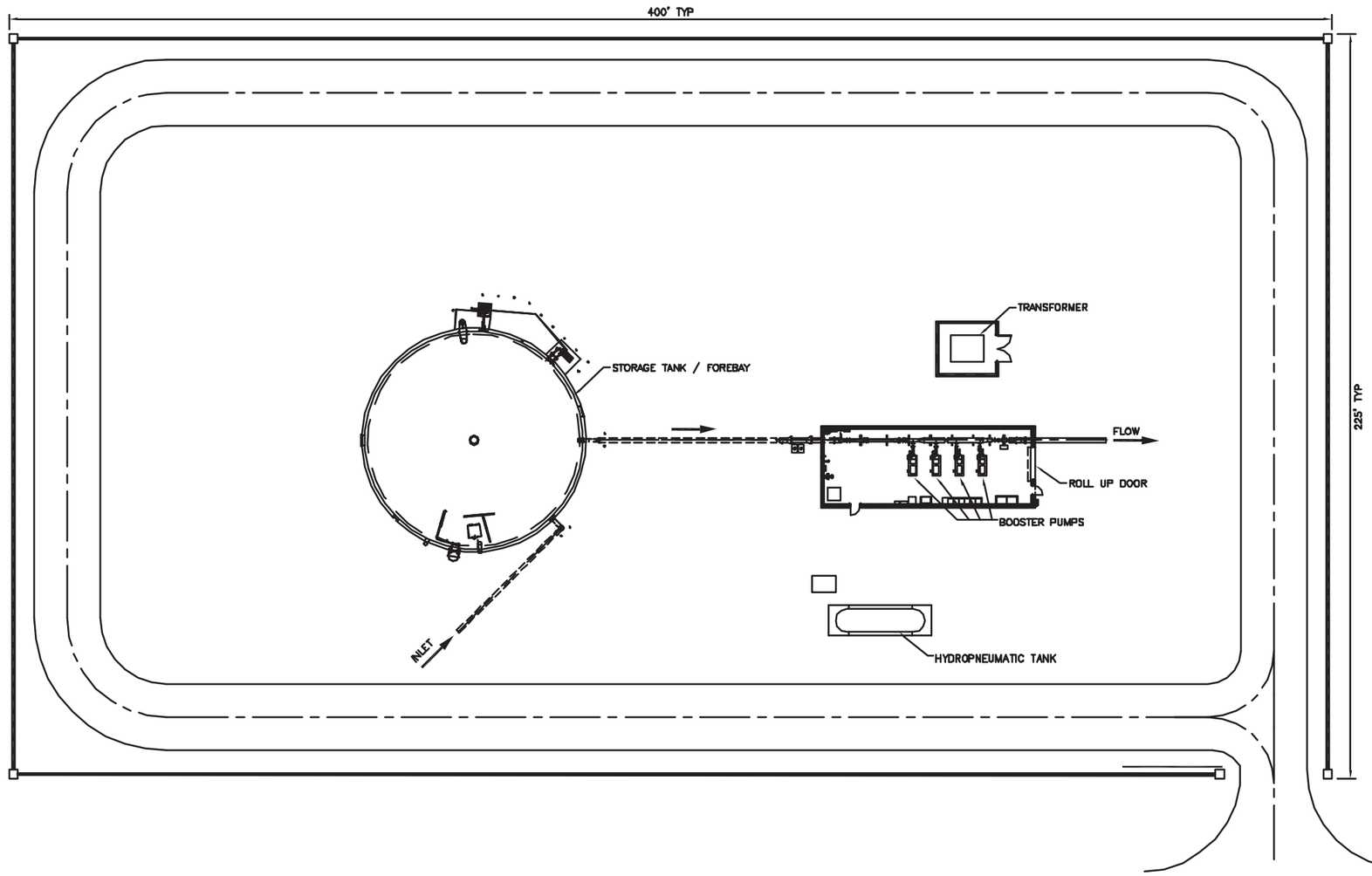

Source: HDR Engineering, 2007

Lincoln County Land Act Groundwater Development and Utility Right-of-Way Project EIS

Figure 2-10

Typical Booster Station Plan View

DRAFT

Date: 02-21-2008	R:\projects\AZ002506-BLM-LincolnCo\PDF\ES_maps\Final_LCLA_ES_Figs\Jan_2008\Revised_Figures\Fig_2-10_Booster_Station_Plan.pdf	REV. No. A

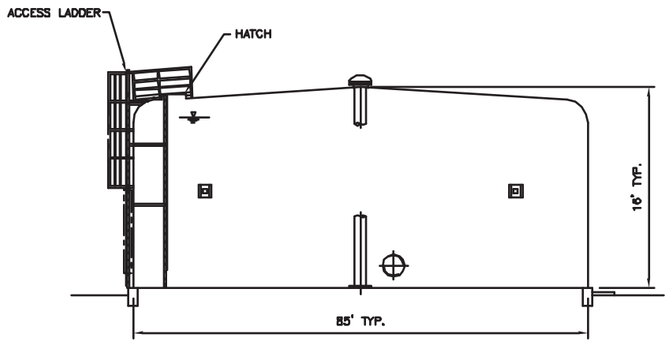

TANK ELEVATION

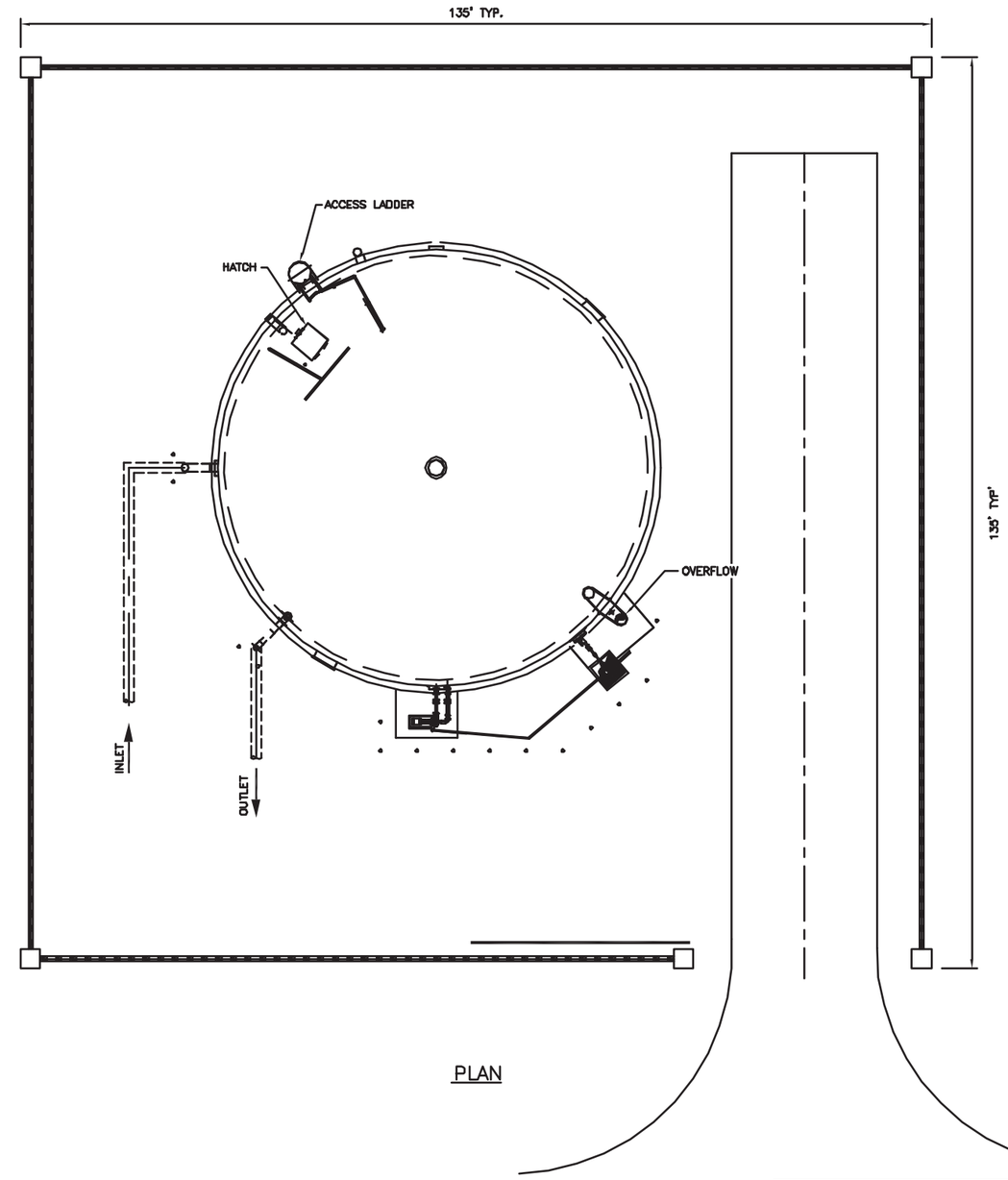

PLAN

Source: HDR Engineering, 2007

Lincoln County Land Act Groundwater Development and Utility Right-of-Way Project EIS

Figure 2-11

Typical Site Plan for a Water Storage Tank

DRAFT

Date: 02-21-2008	R:\projects\AZ002506-BLM-LincolnCo\PDF\ES_maps\Final_LCLA_ES_Figs\Jan_2008\Revised_Figures\Fig_2-11_Water_Storage_Tank.pdf	REV. No. A

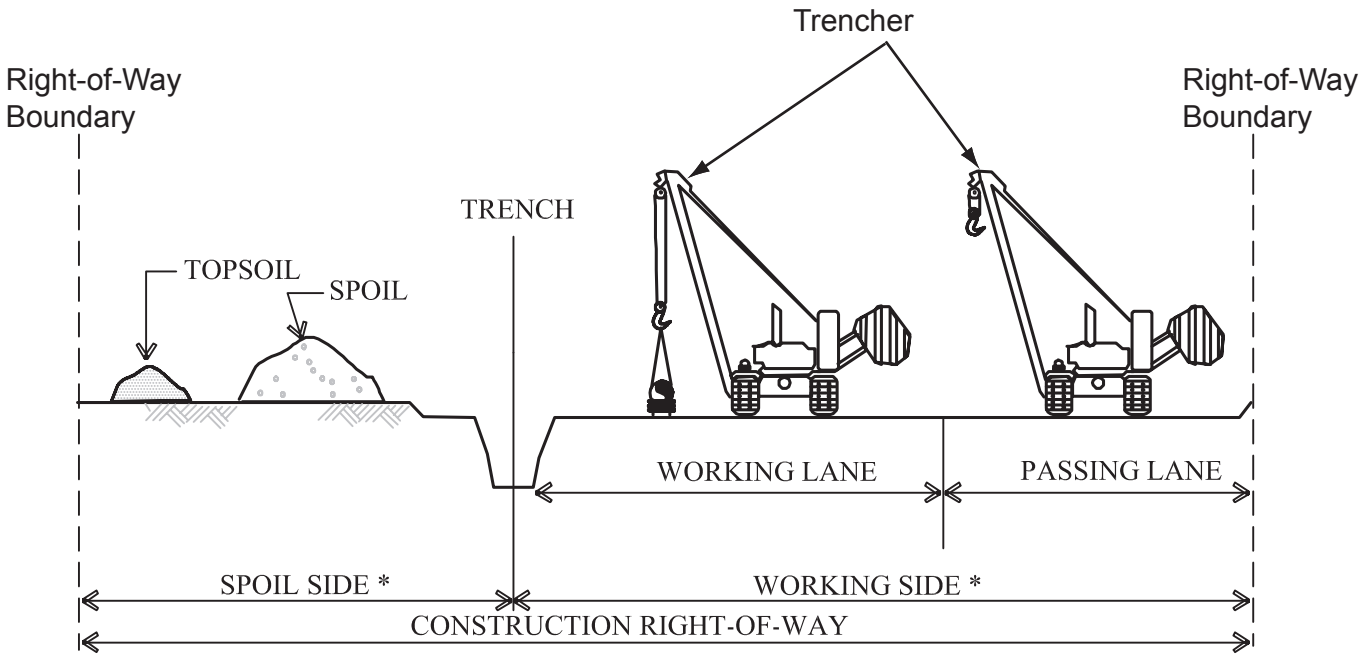

Not To Scale

* Widths as defined on Construction Drawings

NOTES:

1. Vegetation will be mowed, cut, scraped or otherwise removed to ground level on the spoil side of the ROW. Root structures will be left intact in the soil.
2. Salvage topsoil over trench and working side at locations and depths identified on the Construction Drawings or as directed by the Project Developer's Representative. Strip shall be wide enough to accommodate a working and passing lane.
3. Stockpile topsoil as shown or in any configuration approved by the Project Developer's Representative. Keep topsoil clean of debris. Maintain a minimum 1 foot separation between topsoil and spoil pile edges.
4. Leave gaps in topsoil piles at drainages. Do not push topsoil into creeks or wetlands. Do not use topsoil for padding.
5. Apply water, tackifier, or short-term stabilizers to soil stockpiles as necessary to prevent wind erosion and for dust control.
6. Avoid scalping vegetated ground surface when backfilling spoil pile.

Lincoln County Land Act Groundwater Development and Utility Right-of-Way Project EIS

Figure 2-12

Topsoil Salvage Procedures

Source: LCWD, 2007

DRAFT

Date: 02-21-2008	R:\projects\AZ002506-BLM-LincolnCo\PDF\ES_maps\Final_LCLA_ES_Figs\Jan_2008\Revised_Figures\Fig_2-12_Topsoil.pdf	REV. No. A