CHAPTER 2 - PROPOSED ACTION AND ALTERNATIVES

2.1 INTRODUCTION

This chapter presents a description of the alternatives analyzed in this EIS. The Proposed Action alternative includes the features of the proposed Project including the two, dry-cooled, 250 MW solar plants with thermal storage and their associated facilities. A second alternative considers the construction and operation of two wet-cooled 250 MW solar plants with thermal storage and their associated facilities. Under the No Action Alternative, there would not be a solar facility constructed and the environmental and social setting would be unchanged from with current conditions. Other alternatives were considered but eliminated from detailed study as explained in this section.

2.1.1 Regulatory Framework for Alternatives

The BLM is required by NEPA to evaluate not only the Proposed Action, but reasonable alternatives including the No Action Alternative (40 CFR §1502.14). Section 1502.14(a) requires Federal agencies to explore a reasonable range of alternatives, "and for alternatives that were eliminated from detailed study, briefly discuss the reasons for their having been eliminated." The CEQ Guidance concerning the NEPA regulations adds that reasonable alternatives include those that are "practical or feasible from the technical and economic standpoint and using common sense, rather than simply desirable from the standpoint of the applicant" (CEQ NEPA's 40 Most Asked Questions, Answer to Question #2).

When granting a right-of-way, FLPMA Title V requires BLM to include in the right-of-way terms and conditions that minimize environmental impacts. Specifically, such terms shall "minimize damage to scenic and esthetic values and fish and wildlife habitat and otherwise protect the environment … require compliance with applicable air and water quality standards established by or pursuant to applicable federal or state law; and … require compliance with State standards for public health and safety, environmental protection, and siting, construction, operation and maintenance of" the right-of-way. Consideration of such terms and conditions will be part of the alternatives analyzed in this Final EIS.

2.2 ALTERNATIVES DESCRIPTION

Based on issues, concerns, and opportunities raised during public scoping, interdisciplinary interaction among resource professionals, and collaboration with interested agencies, a range of potential alternatives to be considered in the EIS were identified and evaluated by the BLM. Based on meetings and discussion with resource professionals and Project staff, three alternatives were chosen to be evaluated in detail in the EIS.

Alternatives to be evaluated in detail in this EIS include: (1) the Proposed Action as described in the Proponent's POD, using the dry-cooled option; (2) the Proposed Action as described in the Proponent's POD, using the wet-cooled option; and (3) the No Action Alternative.

The following section describes the alternatives considered and eliminated from further consideration, followed by a discussion of the Proposed Action (dry-cooled alternative), the Wet-Cooled Alternative, and the No Action Alternative.

2.2.1 Alternatives Eliminated from Further Analysis

In accordance with 40 CFR §1502.14, and consistent with guidance in BLM's NEPA Handbook, alternatives were not carried forward for further analysis if the alternative:

- would be ineffective (it would not respond to the BLM's purpose and need)
- would be technically or economically infeasible
- is inconsistent with the basic policy objectives of the Las Vegas RMP/EIS
- would involve remote or speculative implementation
- is substantially similar in design to an alternative that is analyzed
- would have substantially similar effects to an alternative that is analyzed

2.2.1.1 Alternative Sites

As part of its siting process, the Proponent used a refined set of criteria to screen, identify, and prioritize potential land sites for eventual solar development. Criteria include the physical characteristics of the site, environmental considerations, and economic factors. Each of these criteria was applied during the screening phase for the proposed Project, which led to the selection of the current site.

These criteria included:

- **Solar Resource** – The site needs to be located where high solar insolation is available to maximize the plant's output and allow efficient utilization of the land area affected by project development. For a project to be economically viable, solar insolation levels of greater than 7 kilowatt-hours per square meter per day are desirable.
- **Size and Shape** – The site must be large enough (at least 4,000 contiguous acres) and of adequate proportions to include two 250 MW parabolic trough solar thermal plants. The shape of the site should also support an efficient and cost-effective layout of the project facilities.
- **Slope** – The site should be relatively flat, with a slope of 2 percent or less, to minimize the need for extensive grading and a large volume of cut and fill.

- **Environmental sensitivity** – The site should not be highly pristine or biologically sensitive (e.g., not within a designated wilderness area or Area of Critical Environmental Concern [ACEC]).

- **Availability of Infrastructure and Water** – To minimize cost and potential environmental impacts, the site should be located where water resources are available, and interconnection to an existing transmission system is possible without the construction of lengthy transmission lines. In addition, the site should be in reasonable proximity to suitable transportation infrastructure to allow easier access during both construction and operation without creating the need for additional road construction.

- **Site Control** – The land must be available for sale or lease/right-of-way, at a reasonable cost and be free of conflicting encumbrances. Land with many different owners does not provide adequate site control.

- **Labor Availability** – The site should be close enough to areas with large construction labor pools so as to maximize the number of construction workers within daily commuting range.

- **Economic Viability** – The Project must be economically viable and competitive with other renewable technology projects, including wind, geothermal, and other solar projects. To be viable, the site should be located on property currently available at a reasonable cost, be as close as possible to transmission and transportation infrastructure, and have a high solar resource value.

The selected Project site is located in an area with an excellent solar resource and is large enough to accommodate two 250 MW plants in an optimal layout. In addition, the Project site is relatively flat; not located in any wildlife management or conservation areas; has access to transmission infrastructure and water resources; and was available for an application for a right-of-way from the BLM. Finally, the Project site allows for access to skilled labor and other industrial infrastructure from nearby Pahrump and Las Vegas. Based on these criteria, the present Project site was selected.

Three alternative sites in the regional area were considered. The three sites include a site southeast of Pahrump (Sandy Hills), a site a few miles south of the proposed Project along Anvil Road in Amargosa Valley (Anvil Road), and a site near the Beatty Airport (Beatty Airport). Right-of-way applications were filed for each of these sites in 2007 and 2008. The right-of-way applications for each of these sites were ultimately withdrawn after the Proponent conducted due diligence and preliminary studies on each site and determined the alternative sites did not meet the above criteria. Table 2-1 summarizes the weaknesses and strengths of each of the alternative sites.

Table 2-1 Alternative Sites Considered						
Alternative Site	**Solar Resources**	**Size and Shape**	**Slope**	**Environmental Sensitivity**	**Availability of Infrastructure**	**Site Control**
Sandy Hills Site	Yes	Yes	No	No	Yes	No
Anvil Road Site	Yes	No	Yes	Yes	Yes	No
Beatty Airport Site	Yes	No	Yes	Yes	No	Yes
Yes – Site met criteria; No – Site did not meet criteria						

The Sandy Hills site consisted of approximately 8,000 acres in Pahrump Valley approximately 20 miles southeast of Pahrump. Although the site was large enough to accommodate two 250-MW solar power plants, the site was eliminated from further consideration due to the slope of the site, as well as the existence of sensitive vegetation and wildlife, conflicting encumbrances, and water availability. Construction and operation of a solar thermal power plant at this site would result in higher environmental impacts than the Proposed Action, while not offering any offsetting advantages.

The Anvil Road site consisted of approximately 1,000 acres, located a few miles south of the selected Project site. The site was flat and had good access to transmission and water infrastructure but was too small to accommodate one 250 MW plant, let alone two of them. The Proponent explored acquiring additional private land surrounding the site but determined that the acquisition of sufficient lands was not economically viable. Due to the number of parcels that would have to be acquired to accommodate two 250-MW solar power plants would make obtaining site control more challenging (in comparison to obtaining a right-of-way grant to use BLM lands). This, combined with the size and existing encumbrances on the site, made the site not viable.

The Beatty Airport site consisted of approximately 2,500 acres located adjacent to the Beatty Airport (approximately 35 miles north of the Project site). It was flat and had good solar resource, but it was too small for two 250 MW plants, and had existing encumbrances. The Proponent also determined that access to transmission and water would be more difficult and costly than the Project site that was ultimately selected.

During the 45-day public comment period, the BLM received several comments requesting the agency conduct a full analysis of other sites considered by the Proponent. As described above, the Proponent evaluated several sites before selecting the proposed Project site. The BLM concurred with the Proponent's conclusions to dismiss the alternative sites from further consideration.

The Proponent also considered the alternative of developing the proposed Project as a single 250-MW plant. Generally, building one plant would have fewer environmental impacts, when that plant is considered in isolation. However, given the infrastructure requirements associated

with building a single 250 MW plant, building two plants allows for economies of scale and reduces the infrastructure impacts, including transmission access and water development. In addition, a single plant would be substantially less effective in meeting the Project objective of supporting attainment of renewable energy mandates and objectives, and attaining the Project objective of supporting those mandates and goals. For these reasons, the development of a smaller project was rejected.

During the scoping and 45-day public comment periods, several comments were received requesting that the Proponent move the Project site further north; at least 0.5 to 2 miles away from existing residential or public buildings. The BLM land immediately north of the Project area has a pending right-of-way application on file with the BLM Pahrump Field Office (Cogentrix - NVN-083150). The Proponent filed an overlapping or "second-in-line" right-of-way application on these lands (NVN-087366); however, subsequent discussions between Cogentrix and BLM staff indicate Cogentrix intends to seek approval to develop a solar energy project at this location within the next 2 to 3 years. Although the BLM's right-of-way regulations provide that conflicting applications may be resolved through a competitive process (see 43 CFR §§ 2804.23(c), 2806.50, it is unlikely that the Proponent's overlapping application could be processed in a timeframe that met the Proponent's objectives.

2.2.1.2 Alternative Solar Technology

The Proponent has requested a right-of-way to construct and operate a dry-cooled solar thermal parabolic trough project. The dry-cooled alternative is the Proponent's preferred alternative primarily because it is a well proven technology for this scale of power generation. Solar thermal parabolic trough technology has a history of successful operation in the United States, removing much of the construction and operational risk from construction and operation of the proposed Project. In addition, the Proponent has significant experience and expertise in developing and constructing parabolic trough plants. The Proponent is a wholly owned subsidiary of Solar Trust of America, LLC, a joint venture between Solar Millennium AG and Ferrostaal AG. Solar Millennium AG is an international developer and supplier of parabolic trough collector technology used in powering solar thermal power plants. Solar Millennium AG developed and designed the first parabolic trough power plants, Andasol 1-3, in Spain. Ferrostaal AG is a worldwide provider of industrial services and plant construction and engineering.

Construction and operation of a solar thermal parabolic trough plant using wet-cooling is an alternative that is considered in this Final EIS. Wet-cooling technology has performance advantages in comparison to dry-cooling. Performance is enhanced because wet-cooling relies primarily on evaporation to remove heat from the circulating water, while dry-cooling technology uses an air cooled condenser that cools the steam turbine-generator exhaust steam using a large array of fans that force air over finned tube heat exchangers. The disadvantages of dry-cooling are higher capital costs, higher auxiliary operating power requirements and an overall lower plant performance, especially on hot days, when the peak power is needed most. A dry-cooled plant produces about 5 percent less electric energy on an annual basis than a wet-cooled plant, because of this reduced performance on hot summer days. The cost of electricity produced by a dry-cooled plant is approximately 6 to 9 percent higher than the cost of electricity

produced by a wet-cooled plant. Thus dry-cooling of a trough plant minimizes water use, but at a 6 to 9 percent cost penalty.

2.3 PROPOSED ACTION ALTERNATIVE – DRY-COOLED ALTERNATIVE

The Proposed Action alternative includes the construction and operation of a two-unit parabolic trough solar power plant, with each unit having a net output of 250 MW. The plant will consist of two conventional steam Rankine-cycle power blocks, a parabolic trough solar field, a HTF and steam generation system, a nitrate salt thermal energy storage system, and a variety of ancillary facilities (sometimes referred to collectively as "balance-of-plant"), such as conventional water treatment, electrical switchgear, administration, warehouse, and maintenance facilities. The electric output of the plant will be provided entirely by solar energy. No electricity will be generated by the use of fossil fuels.

Project facilities would be located on approximately 4,350 acres and would include the solar fields, power blocks (located in the center of each solar field), an office and maintenance building, parking area, lay-down area, stormwater detention basin, evaporation ponds, and switchyard. The assembly hall, administration building, laydown area, septic field, detention basin(s), and switchyard will be located north of the realigned portion of Amargosa Farm Road. Amargosa Farm Road is an existing public roadway maintained by Nye County Public Works. The roadway consists of 24 feet of asphalt/concrete pavement and roadside ditches on both sides. Amargosa Farm Road will be realigned, approximately 1,320 feet (0.25 mile) south of the existing roadway and would extend from the vicinity of Sandy Lane to Valley View Boulevard; a distance of approximately 3.5 miles. The proposed roadway alignment would be coordinated with Nye County Public Works and be reconstructed in conformance with current standards and stipulations outlined in the Development Agreement between Nye County and the Proponent.

Preliminary Project site plans depicting the alignment alternatives for both the dry-and wet-cooled alternatives are provided in Figure 2-1 (wet-cooled layout) and Figure 2-2 (dry-cooled project layout). The final plant layout will be determined based on engineering design and in consideration of resource constraints and opportunities. General facility dimensions are listed in Table 2-2.

A land survey of the proposed right-of-way is being performed to determine the final boundary and extent of the Project area. A topographic survey was performed to obtain one-foot contours for final engineering design for grading and drainage-related requirements. A preliminary geotechnical study of the Project site will be conducted to evaluate general subsurface conditions, seismicity, and other geological hazards and to provide recommendations for design and construction of the foundations for Project structures.

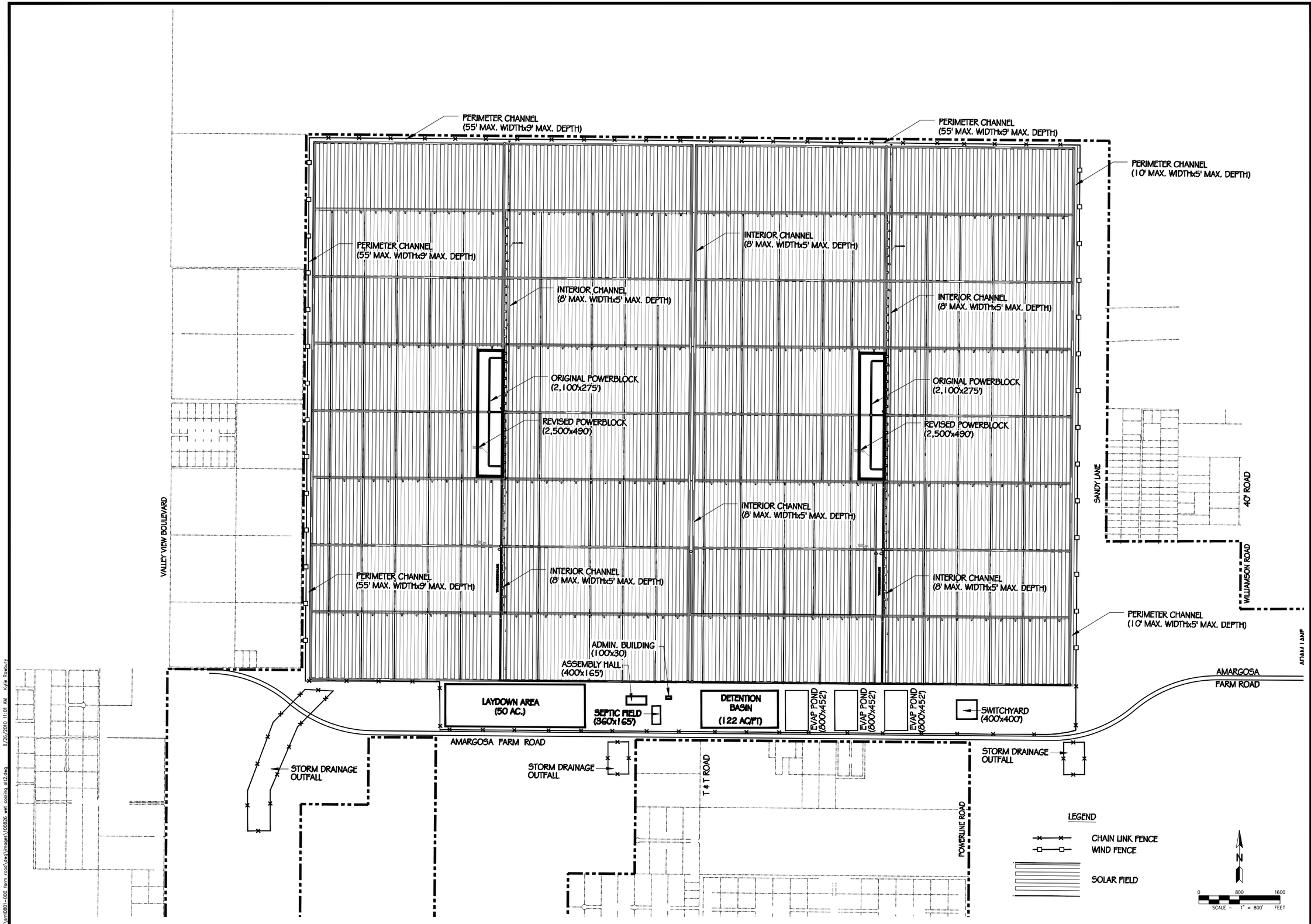

SLATER HANIFAN GROUP
CONSULTING ENGINEERS & PLANNERS
8740 S. ARVILLE STREET #214, LAS VEGAS, NV 89113
PHONE (702) 284-5380 FAX (702) 284-5390

NO.	DESCRIPTION	DATE	BY	APP. DATE	APP.

SOLAR MILENNIUM, LLC.

AMARGOSA FARM ROAD SOLAR PROJECT

FIGURE 2-1 WET COOLED ALTERNATIVE

DATE: 08-26-10
DRAFTER: NL
DESIGNER: NL
CHECKED: BDP
PROJECT NO.
SML0801.000

FIG. 2-1
SHEET 1 OF 1
####

J:\sml0801-000 farm road\dwg\images\100826 wet cooling dr12.dwg 8/26/2010 11:01 AM Kyle Rivebury

This page intentionally left blank.

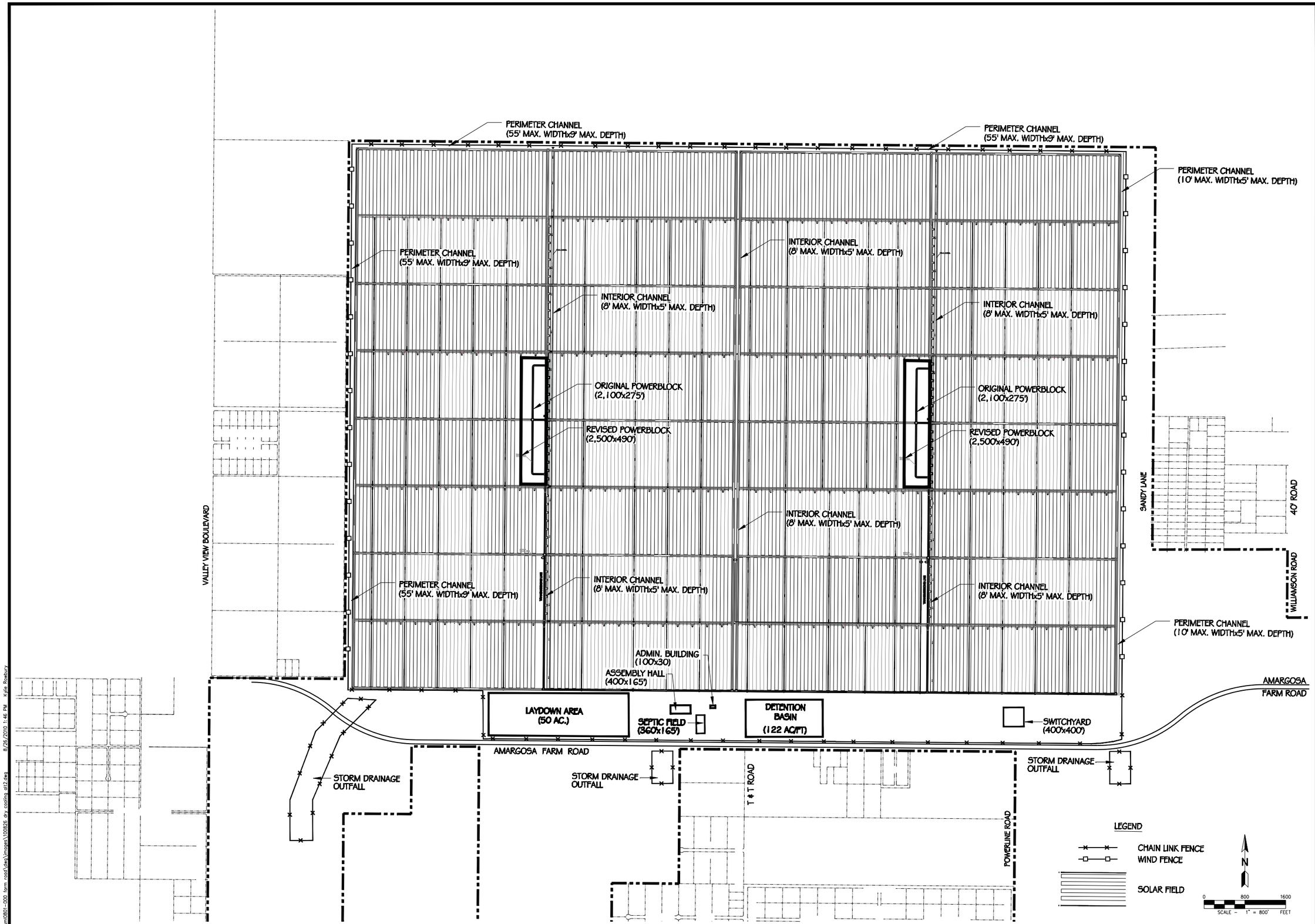

SLATER HANIFAN GROUP
CONSULTING ENGINEERS & PLANNERS
8740 S. ARVILLE STREET #214, LAS VEGAS, NV 89113
PHONE (702) 284-5380 FAX (702) 284-5389

NO.	DESCRIPTION	DATE	BY	APP. DATE	APP.

SOLAR MILENNIUM, LLC.

AMARGOSA FARM ROAD SOLAR PROJECT

FIGURE 2-2 PROPOSED ACTION - DRY COOLED ALTERNATIVE

DATE: 01-21-10
DRAFTER: NL
DESIGNER: NL
CHECKED: BDP
PROJECT NO.
SML0801.000

FIG. 2-2
SHEET 1 OF 1
####

\\smi0801-000 farm road\dwg\images\100826 dry cooling alt2.dwg 8/26/2010 1:46 PM Kylie Roxbury

This page intentionally left blank.

Table 2-2 Preliminary Facility Dimensions

Project Component	Approximate Dimensions / Acreage	Proposed Alternative (Dry-Cooled)	Wet-Cooled Alternative
Solar Fields	Two fields, Approximately 7,800 feet east-west by 11,000 feet north-south. Each field has a collector aperture area of approximately 2 million square meters. (1,970 acres)	X	X
Power Blocks[1]	Dry-cooled – One power block located in the center of each solar field (28 acres each). Dimensions of each power block is 2,500 feet x 490 feet; tallest major structure is the air-cooled condenser at 144 feet high Wet-cooled – One power block located in the center of each solar filed (28 acres each). Dimensions of each power block is 2,500 feet x 490 feet; tallest major structure is the water-cooled condenser at 55 feet high	X	X
Switchyard	400 feet x 400 feet (3.7 acres)	X	X
Assembly Hall/Maintenance Building	394 feet x 164 feet x 46 feet (1.5 acres)	X	X
Main Office Building	200 feet x 53 feet x 12 feet (.24 acres)	X	X
Parking Area	250 feet x 100 feet (0.5 acres)	X	X
Stormwater Detention Basin	1,200 feet x 1,200 feet (33 acres) – providing 122-acre-feet of storage assuming 4-foot-deep basin)	X	X
Evaporation Pond(s)	Dry-cooled – Two 4-acre evaporation ponds per power block (16 acres total for the project) Wet-cooled - Three 8.3-acre evaporation ponds (25 acres total for the project)	X	X
Bioremediation Area	400 feet x 800 feet (7.3 acres total for the project)	X	X
Fencing	Wind fencing on east and west side of facility: 30 feet high x approximately 11,000 feet long per side Perimeter fencing on north side of facility: 9 feet high x approximately 15,500 feet long Perimeter fencing on south side of facility: 8 feet high x approximately 17,500 feet long	X	X

[1] Components contained within the power block area are shown on Figure 2-4.

All plant facilities will be designed, constructed, and operated in accordance with applicable laws, ordinances, regulations, and standards. All generating facilities will be located within the facility fence line. Project-related linear facilities located outside the plant site fence line include the access road off of Valley View Boulevard, and the water pipeline to convey water to the Project site.

2.3.1 General Process Description

The solar power plant cycle basically consists of three distinct, coupled systems: the solar field and HTF system, the thermal energy storage system, and the power block. At the basic level, the HTF moves accumulated solar heat from the parabolic trough solar field to drive the turbine generator. The system distributes cold HTF from the power block to solar field collector loops, and collects hot HTF from the solar field, and inputs the collected heat to the feedwater/steam cycle. A schematic depicting this process is shown on Figure 2-3.

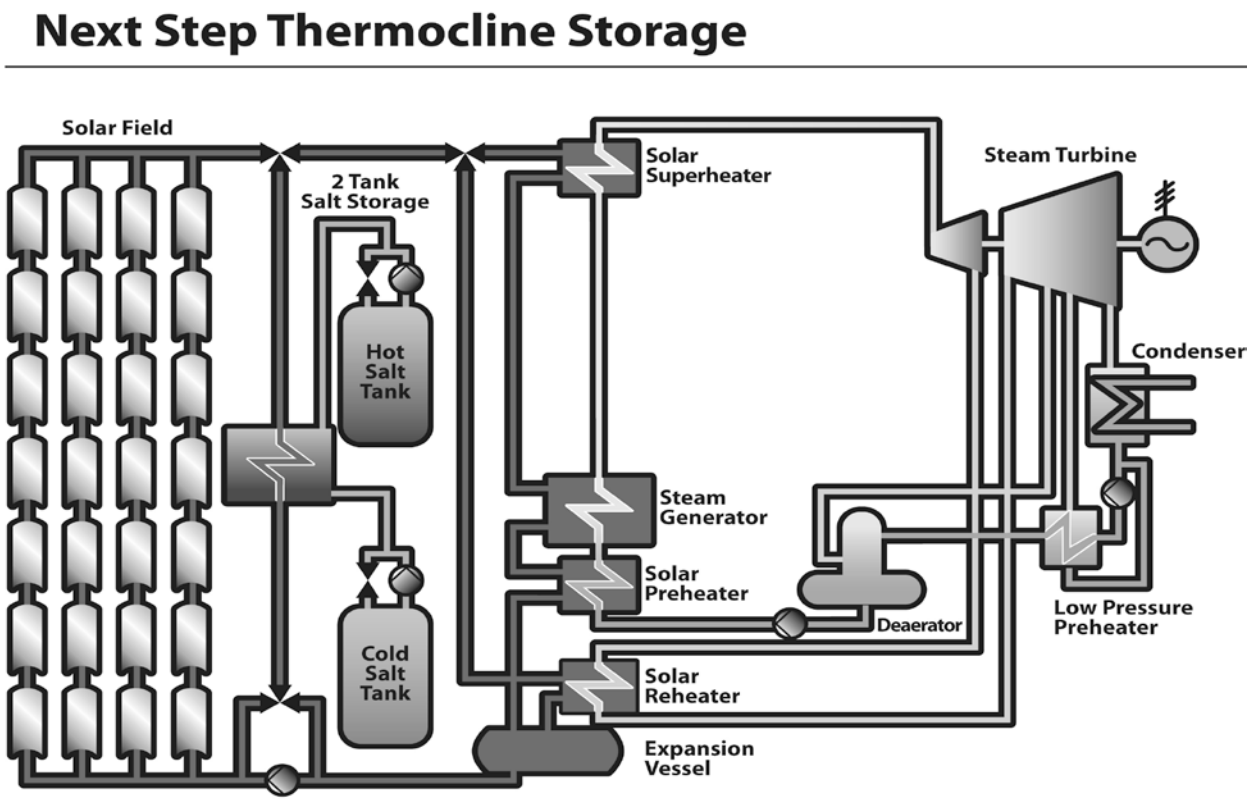

Figure 2-3 Plant Schematic Diagram (with thermal storage)

The HTF cycle is driven by two parallel pump stations. The nominal flow rate is approximately 2,800 kilograms per second (6,200 pounds per second). During operation, the HTF temperature varies from 739 °F (393 °C) [hot] after heating by the solar field to 565 °F (296 °C) [cold] leaving the power block heat exchangers. The hot HTF flows to parallel steam generation trains. Each train includes a preheater, steam generator, superheater and reheater. In normal operation, the hot HTF stream is split between the trains. It is also possible to remove each train from the loop via motor control valves.

As the solar field begins tracking the sun and the HTF heats up, its thermal expansion is accommodated in an expansion vessel. If the HTF in this vessel reaches its design working level it flows into overflow vessels. If thermal input to the HTF stops, the HTF begins to contract. The HTF level in the expansion vessel falls, and the overflow return pumps transfer the HTF from the overflow vessels back into the expansion vessel to maintain sufficient content at that location.

2.3.2 Solar Fields

Approximately 90 percent of the plant footprint is taken by the two parabolic trough solar fields. The solar fields will be modular, distributed systems of 4 solar collector assemblies (SCA), or *loops,* connected in a series-parallel arrangement via a system of insulated pipes. A loop is approximately 72 feet wide and 2,790 feet long, and is designed to raise the temperature of the heat collection fluid by approximately 175 °F (79.4 ^{o}C). The collectors will be equipped with a sun tracking mechanism that moves the reflecting panels toward the sun to the optimum angle for solar energy collection.

2.3.2.1 Solar Collector Assemblies

The SCAs are oriented north and south and rotate east to west to track the sun as it moves across the sky throughout the day. The SCAs collect heat by means of linear troughs of parabolic reflectors that focus sunlight onto a straight line of heat collection elements (HCE) welded along the focus of the parabolic trough. Each SCA includes local measurement instrumentation, a hydraulic drive system, and a controller that independently tracks the sun to maintain mirror focus on the HCEs and protects the HCEs from overheating.

Each SCA will be supported by structures (stands) that connect the parabolic troughs to the drive mechanism. Each array will be supported by multiple individual foundations with a foundation located approximately every 63 feet, along the assembly. Foundation design will be based on site-specific geotechnical conditions to ensure that the SCA stands are able to support all loading conditions (including wind loading) at the Project site.

2.3.2.2 Parabolic Trough Collector Loop

Each of the collector loops consist of two adjacent rows of SCAs, each row about 1,200 feet long. The two rows are connected by a crossover pipe. The HTF is heated to a high temperature as it circulates through the receiver tube and returns to a series of heat exchangers in the power block where the fluid is used to generate high-pressure superheated steam. The superheated steam is then fed to a conventional power block, consisting of a reheat steam turbine generator to produce electricity, and carried to a nearby substation via a project-specific transmission line. In normal operation, HTF enters the field at 565 °F (296 °C) and leaves the field at 739 °F (393 °C).

The HTF is a synthetic hydrocarbon liquid mixture of diphenyl ether and biphenyl oxide. Similar formulations are marketed by different manufacturers under the names of Therminol or Dowtherm. The HTF is not classified as a hazardous material by the U.S. Department of

Transportation (USDOT), and is not listed under EPA Comprehensive Environmental Response, Compensation, and Liability Act (CERCLA) regulations. It has a crystallizing (freezing) point of about 54 °F (12 °C). Freeze protection is routinely accomplished by circulating HTF at a very low flow rate through the solar field using hot HTF from the vessel as a source.

2.3.2.3 Parabolic Mirrors

The parabolic mirrors to be used in the solar fields are low-iron glass mirrors, and are known to be one of the most reliable components in the SCAs. No long-term degradation of the mirrors has been observed at other solar thermal plants, and older mirrors can be brought back to nearly full reflectivity with simple cleaning. The typical life spans of the reflective mirrors is 30 or more years. The HCEs of the solar plant are comprised of a steel tube surrounded by an evacuated glass tube insulator. The steel tube has a coated surface that enhances its heat transfer properties with a high absorptivity for direct solar radiation, accompanied by low emissivity. Glass to metal seals and metal bellows are incorporated into the HCE to ensure a vacuum-tight enclosure. The enclosure protects the coated surface and reduces heat losses by acting as an insulator.

The glass tube cylinder has anti-reflective coating on both the inner and outer surfaces to reduce reflective losses off the glass tube, thereby increasing the transmissivity. Usually, to maintain the tube's insulating properties, getters, or scavengers, are installed in the vacuum space to absorb hydrogen and other gases that may permeate into the vacuum cylinder over time.

2.3.2.4 Process Control of the Solar Field

The solar field system operates under the control of the Field Supervisor Controller (FSC), a computer located in the central control room that communicates with each SCA and with the plant's Distributed Control System (DCS). The FSC collects information from each SCA and from the DCS, and issues instructions to the field as a whole, and/or modular instructions to SCA loops or individual SCAs. It deploys the solar field during the day when weather and plant availability permit, and stows it at night and during high winds.

A weather station located in the power block area provides real-time measurements of weather conditions that affect the solar field operation. Radiation data are used to determine the performance of the solar field. Wind speed data are needed since under high wind conditions the solar field must be stowed. The FSC communicates with the plant's DCS, which coordinates and integrates power block, HTF system, and solar-field operation. The DCS communicates with all subsystem controls, including electrical system equipment, steam cycle controllers, variable frequency drives and balance of plant system controllers via serial data communications. It receives analog and digital inputs/outputs from all instruments and equipment not served directly by dedicated local controllers.

The DCS enters solar field control mode automatically after completing warm-up mode. At the beginning of warm up, the HTF is circulated through a bypass around the power block heat exchangers until the outlet temperature reaches the residual steam temperature in the heat exchangers. The HTF is then circulated through the heat exchangers and the bypass is closed. As

the HTF temperature at the solar field outlet continues to rise, steam pressure builds up in the heat exchangers until the minimum turbine inlet conditions are reached, upon which the turbine can be started and run up to speed. The turbine is synchronized and loaded according to the design specification until its power output matches the full steady state solar field thermal output.

The DCS regulates the flow by controlling the HTF main pump speeds to maintain the solar field outlet temperature of approximately 739 °F (393 °C). Several HTF pumps will be operated in parallel, at the speed required to provide the required flow in the field. However in exceptional cases (e.g., during maintenance), lower numbers of pumps may be used alone, providing up to 70 percent of full flow at nominal pump capacity. If the thermal output of the solar field is higher than the design capacity of the steam generation system, the HTF flow is directed to the salt heat exchanger train. Cold salt is circulated from the cold salt tank, through the HTF heat exchangers, and into the hot salt storage tank. If both the steam generation train and salt heat exchanger trains are fully loaded, collectors within the solar field are de-focused to maintain design operating temperatures.

If the minimal thermal input to the turbine required by the operating strategy cannot be met under the prevalent weather conditions, then shutdown is indicated. Operators would track all solar collectors into the stow position, reduce the number of HTF main pumps to a minimum, and stop the HTF flow to the power block heat exchangers.

During periods when the solar power generating facility is shutdown, the HTF is circulated through the piping in the solar fields at a low flow rate. For most of the year, under typical weather conditions, no supplemental heat is required to keep the HTF flowing freely. However, it is anticipated that on colder winter nights, supplemental heat will be required to ensure the HTF doesn't freeze in the piping. A gas-fired HTF heater, with a rated capacity of 35 million British thermal units per hour (MMBtu/hr), will be provided as part of the HTF system. It is expected that the HTF heater will need to operate approximately 50 hours per year to keep the HTF from freezing.

2.3.3 Power Blocks

The power blocks, including the steam cycle, HTF system and thermal storage system, are located at the center of each solar field. The electrical and local control buildings, workshop buildings, electrical equipment buildings, and water treatment facilities will be located within the power blocks. A list of components contained within each power block, and their general location are shown in Figure 2-4. Major components specific to the power block are briefly described in the following section.

2.3.3.1 Solar Steam Generator System

The solar steam generator system transfers heat from the HTF to the feed water (see Figure 2-3). The steam generated in the solar steam generator is piped to a Rankine-cycle reheat steam turbine. Heat exchangers are included as part of the solar steam generator system to preheat and boil the condensate, superheat the steam, reheat the steam, which is then sent to the steam turbine generator.

The steam expands through the steam turbine generator turbine blades to drive the steam turbine that, in turn, drives the generator, which converts mechanical energy to electrical energy. The Project's steam turbine generator is expected to be a three-stage casing type with high-pressure, intermediate-pressure, and low-pressure steam sections. The steam turbine generator is equipped with accessories required to provide efficient, safe, and reliable operation. Major components include steam stop and control valves, a gland seal system, lubricating and jacking oil systems, thermal insulation, and control instrumentation.

The solar steam generator system and steam turbine generator will be located outdoors and supported on reinforced, concrete mat foundations. The steam turbine generator foundation will include a reinforced concrete pedestal.

2.3.3.2 Power Block HTF System

In addition to the HTF piping in the solar field, the HTF system within the power block includes three elements: (1) the HTF heater, (2) the HTF expansion and overflow vessels and (3) the HTF ullage system. To eliminate the problem of HTF freezing, an HTF heater will be installed and used to ensure system temperature stays above 54 °F (12 °C) whenever the unit is off-line. An expansion vessel is required to accommodate the volumetric change that occurs when heating the HTF to the operating temperature.

During plant operation, the HTF will degrade into components of high and low boilers (substances with high and low boiling points). The low boilers are removed from the process through the ullage system. The HTF is removed from the HTF surge tank and flashed, leaving behind high boilers and residual HTF. The flashed vapors are condensed and collected in the ullage system.

Leak detection of HTF will be accomplished in various ways. Visual inspection throughout the solar field on a daily basis will detect small leaks occurring at ball joints or other connections. Such leaks can be corrected via minor repairs or repacking of joints and valves. The configuration of the looped system, allowing different sections of the loops to be isolated, will facilitate the repair of small leaks. Since larger leaks are of a greater concern, detection of large leaks is being proposed by using remote pressure sensing equipment and remote operating valves to allow for isolation of large areas of the loops in the solar field. Details of the design will be developed in the design detail process.

2.3.3.3 Thermal Energy Storage

Each plant will include thermal storage, consisting of three dual, two-tank molten salt systems, sufficient to support approximately 4.5 full load-equivalent hours of electric energy after sundown and on cloudy days. The thermal energy storage system contains hot and cold storage tanks connected via two parallel trains of six oil-to-salt heat exchangers in series. For charging the storage, the salt is heated up to approximately 726.8 °F (386 °C), and for discharging it is cooled down again to approximately 557.6 °F (292 °C).

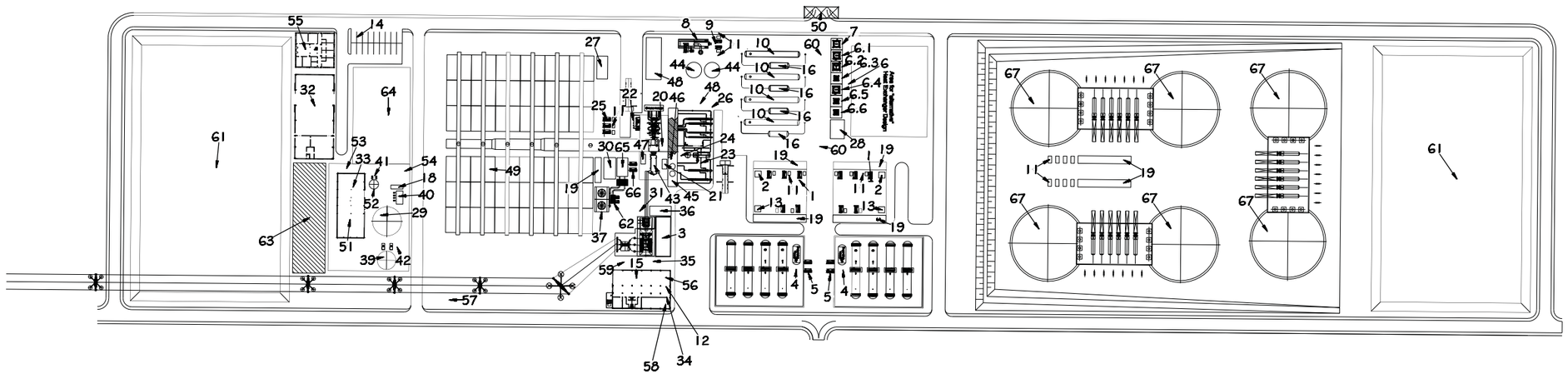

POWER BLOCK DETAIL
SCALE 1"=100'

1. HTF MAIN PUMPS
2. HTF PUMPS SEAL OIL UNIT
3. SWITCH YARD
4. OVERFLOW VESSEL AND EXPANSION VESSEL
5. OVERFLOW RETURN PUMPS
6. ULLAGE COOLERS AND VESSEL
   - 6.1 HTF STORAGE TANK
   - 6.2 COLLECTING TANK
   - 6.3 RECLAMATION FLASH VESSEL
   - 6.4 RECLAMATION DRAIN VESSEL
   - 6.5 ULLAGE VESSEL 1
   - 6.6 ULLAGE VESSEL 2
7. NITROGEN SYSTEM
8. HTF HEATER
9. FREEZE PROTECTION PUMPS
10. STEAM GENERATORS
11. VARIABLE FREQUENCY DRIVE SYSTEM
12. WEATHER STATION
13. HTF PUMPS LUBE OIL UNIT
14. PARKING
15. BALANCE OF PLANT ELECTRICAL
16. REHEATERS
17. EXCITATION TRANSFORMER
18. WATER TREATMENT MCCS
19. MOTOR CONTROL CENTER
20. STEAM TURBINE
21. GLAND STEAM CONDENSER
22. LUBE OIL CONSOLE
23. DEAERATOR
24. FEEDWATER PUMPS
25. CONDENSATE PUMPS
26. LP/HP PRE-HEATERS
27. VACUUM SYSTEM
28. DIRTY WASTE WATER SUMP, OIL WATER SEPARATOR
29. RAW WATER TANK
30. COMPRESSED AIR SYSTEM
31. GENERATOR CIRCUIT BREAKER
32. WAREHOUSE
33. CHEMICAL INJECTION SKID
34. MAIN AUXILIARY TRANSFORMERS
35. GENERATOR STEP-UP TRANSFORMERS
36. EMERGENCY DIESEL GENERATOR
37. COOLING TOWER
38. FREE FOR USE
39. FIRE AND SERVICE WATER TANK
40. SERVICE WATER PUMPS
41. DEMINERALIZED WATER PUMPS
42. FIRE PROTECTION PUMPS
43. GENERATOR
44. BLOWDOWN TANKS
45. TURBINE DRAINS TANK
46. CONDENSATE TANK
47. STG PEECC
48. AUXILIARY BOILER
49. AIR COOLED CONDENSER
50. HTF PIPING CONNECTION TO SOLAR FIELD
51. SAMPLE PANEL & LAB BUILDING
52. DEMINERALIZED WATER TANK
53. CHEMICAL FEED CANOPY
54. WATER TREATMENT AREA
55. ADMINISTRATION BUILDING
56. CONTROL BUILDING
57. HIGH VOLTAGE LINE
58. SUS TRANSFORMER & 480 V BUS
59. TAKE OFF TOWER
60. PIPE RACK
61. EVAPORATION POND
62. AUXILIARY COOLING WATER PUMPS
63. SEPTIC SYSTEM FIELD
64. Waste Water Tredment AREAWASTE WATER TREATMENT AREA
65. CLOSED COOLING WATER HEAT EXCHANGERS
66. CLOSED COOLING WATER PUMPS
67. THERMAL STORAGE TANK
68. FREE FOR USE
69. FREE FOR USE
70. FREE FOR USE

N

0 100 200
SCALE – 1" = 100' FEET

SLATER HANIFAN GROUP
CONSULTING ENGINEERS & PLANNERS
8749 S. ARVILLE STREET #214, LAS VEGAS, NV 89113
PHONE (702) 294-5390 FAX (702) 294-5390

NO.	DESCRIPTION	DATE	BY	APP. DATE	APP.

SOLAR MILENNIUM, LLC.

AMARGOSA FARM ROAD SOLAR PROJECT
FIGURE 2-4 DRY COOLED POWER BLOCK DETAIL

DATE: 07-08-10
DRAFTER: NL
DESIGNER: NL
CHECKED: BDP
PROJECT NO.
SML0801.000

FIG. 2-4
SHEET 1 OF 1

####

J:\sml0801-000 farm road\dwg\image\100826 powerblock detail-dry.dwg 8/26/2010 10:58 AM Kylie Roetbury

This page intentionally left blank.

The salt freezes at approximately 429.8 °F (221 °C). Freezing of the salt must be avoided to prevent damage of components. The freeze protection system, which uses the hot HTF, keeps the salt at a minimum temperature of 500 °F (260 °C). To avoid freezing of the salt in non-working periods, the heat exchangers are equipped with electrical heat tracing.

2.3.3.4 Cooling Systems

The proposed Project will utilize a dry-cooling system for heat rejection from the steam cycle consisting of a forced draft air-cooled condenser. In the dry-cooled alternative, the auxiliary cooling water system uses a small wet-cooling tower to cool plant auxiliary equipment, including the steam turbine generator lubrication oil cooler, the steam turbine generator cooler, steam cycle sample coolers, and large pumps. The water picks up heat from the various equipment items being cooled and *rejects* the heat to the cooling tower. This auxiliary cooling system will allow critical equipment such as the generator and HTF pumps to operate cooler and at their design ratings during hot summer months when the Project's power output is most valuable. An average of 130,000 gallons per day of water per day (108 afy) will be consumed by the auxiliary cooling water system; the maximum rate of consumption is estimated to be 197,500 gallons per day during the summer.

2.3.3.5 Buildings within the Power Block

Each power block will contain electrical and local control buildings, workshop buildings, and electrical equipment buildings. All of these buildings will be of pre-engineered metal frame construction and assembled on site. Accessibility to buildings will be in full compliance with applicable codes and standards including the Americans with Disabilities Act. The total footprint area of the buildings in each power block is approximately 31,200 square feet.

2.3.3.6 Buildings within the Shared Facilities Area

Other site buildings will include the main office building, the assembly/warehouse building, and the water treatment building, as well as a number of small, pre-engineered enclosures housing mechanical and electrical equipment. Building columns will be supported on reinforced concrete mat foundations or individual spread footings and the structures will rest on reinforced concrete slabs.

All site buildings will be designed to industrial standards. To minimize visual impacts and improve aesthetics, all site buildings will be painted with appropriate colors to minimize visual contrast with the surrounding landscape. Colors would be selected from the "BLM Standard Environmental Color Chart (CC-001, June 2008)" and/or in consultation with applicable BLM visual resource management staff. For the administration buildings, the layout should incorporate design concepts outlined in the BLM Guidelines for a Quality Built Environment (draft 2010) which includes the effective use of color, form and textures as well as landscaping treatments that reduce contrast and increase aesthetics. Electrical System

The Project electrical components consist of the solar field electrical systems, the electrical system within the power blocks, and the Project switchyard. Transmission of power from the proposed Project will be "wheeled" through Valley Electric Association, Inc.'s (VEA) existing and proposed transmission lines. The proposed point of interconnection will be to a new 230 kilovolt (kV) switchyard to be constructed near Amargosa Farm Road and Power Line Road adjacent to the power plant. In addition to the new substation, VEA will widen its existing transmission right-of-way to accommodate a new, 26.5 mile, double circuit 230kV transmission line from the proposed VEA switchyard adjacent to the Project site to the planned Johnnie substation located on VEA's Mead to Northwest 230kV transmission line approximately 7.5 miles north of Pahrump, Nevada. VEA is responsible for upgrading its transmission system and is preparing a separate NEPA review for that action.

Temporary construction power will be obtained from VEA over one of the 12.47kV transmission lines that feeds out of VEA's Valley substation. Peak construction power requirements are estimated at approximately 3 to 4 MW. Temporary construction power will be distributed within the Project site over the site's internal 12.47kV distribution system.

2.3.3.7 Electrical Generation

Roughly 10 percent of the steam turbine generator output would be used on site for plant auxiliary loads such as motors, heaters, control systems, and general facility loads including lighting and heating, ventilation, and air conditioning. Some of the power needed for on-site uses would be converted from alternating current (AC) to direct current (DC) for power plant control systems and emergency backup systems. Power would be generated by the steam turbine generator (size and generation voltage is dependent on the final generator selection) and stepped up by a fan-cooled generator step-up transformer.

The steam turbine-generators would electrically connect to a 230kV on-site switchyard. The steam-turbine-generators generate electricity at 18kV. This voltage would be increased (stepped-up) in the switchyard to 230kV via a generator step-up transformer. The generator step-up transformer would rest on a concrete pad with a perimeter berm designed to contain the transformer insulating oil in the event of a leak or spill.

The plant site switchyard would be located in the southeast corner of the Project site and would require an overhead steel-reinforced, aluminum conductor unit tie line for the connection to each unit's generator step-up transformer. The switchyard would consist of 230kV switchyard circuit breakers with 230kV disconnect switches on each side of the breaker for breaker maintenance.

The switchyard ground grid will be connected to the generation plant ground grid and will consist of copper conductor throughout the yard with ground rods installed around the perimeter and near major equipment. A layer of aggregate will be installed above grade to increase contact resistance within the fenced switchyard area.

2.3.3.8 Direct Current Power Supply System

An uninterruptible power system will be provided in each unit. The power system will service emergency lighting, the DCS, electrical breakers, and relays. The DC power system will serve as a temporary bridge to the more robust emergency diesel AC power supply in the event external power is suddenly lost.

2.3.3.9 Essential Service Alternating Current System

A 120-volt essential service AC power distribution system serves critical equipment loads, lighting and alarms, and loads that protect equipment from potential damage in the event of sudden loss of station service. This system is served through an inverter that receives power from the DC power supply system.

2.3.3.10 Telecommunications

Site voice and data communications will be supplied from an AT&T fiber optic line located adjacent to the Project site. This will be supplemented with wireless voice communications to meet the construction and operations needs in the solar fields.

2.3.4 Fuel Supply and Use

The auxiliary boiler and HTF heaters will be fueled by propane. Propane will be delivered to the plant site via truck from a local distributor and stored in 18,000-gallon aboveground tanks (one in each power block). The estimated propane usage for the auxiliary boiler per unit for normal operation is approximately 9 MMBtu/hr overnight and approximately 34 MMBtu/hr for 30 minutes during startup each morning. The estimated maximum propane usage for the HTF heater is an additional 41 MMBtu/hr per unit is for approximately 50 hours per year during the winter.

A fuel depot would be constructed within the laydown area to refuel, maintain, and wash construction vehicles, and would occupy an area of approximately 75 feet by 150 feet. It would consist of a fuel farm with two on-road vehicle diesel tanks, each having a 2,000-gallon capacity; two 8,000-gallon off-highway vehicle (OHV) diesel tanks; one 1,000-gallon gasoline tank; and a wash water holding tank. The fuel farm would include secondary spill containment; a covered maintenance area, also with secondary containment; and a concrete pad for washing vehicles.

2.3.5 Water Supply and Use

Under the Proposed Action, the Project would use dry-cooled technology. Water use in a dry-cooled plant would include water for solar collector mirror washing, makeup for the solar steam generator feedwater, dust control, water for cooling plant auxiliary equipment, potable water and fire protection.

2.3.5.1 Water Source

On March 18, 2010, the Proponent filed Application 79699 with the NDWR Nevada State Engineers Office to change the manner of use and place of use of a portion of an existing certificated water right near the Project site. The water right has an annual duty of 603 afy, which has been pumped approximately 413.88 afy on average over the last 25 years (Table 2-3). In addition, the Proponent filed Application 79783 on April 15, 2010 for a new point of diversion for a combined duty with Application 79699 of 400 afy. The Proponent intends to lease the underlying water rights from the water rights holder or Lessor, to withdraw up to 400 afy of groundwater from the Amargosa Desert Hydrographic Basin for a period of 30 years for industrial purposes in connection with the construction and operation of the proposed Project.

Table 2-3 Project Well

Application No.	Certificate No.	Location	Annual Duty (afy)[1]	25-year Average Pumpage (afy)[1]
15893	5717	NE ¼ NE ¼ Sec 23, T16S, R48E	603.00	413.88

[1]One acre-foot equals 325,851 gallons
Source: NDWR 2009a

The Proponent intends to drill a new well and move the point of diversion to a location just west of the current well. This will allow for redundancy should one of the wells fail. Meters will be placed on both wells to ensure there is no exceedance of the permissible annual duty.

A new pipeline will be constructed from the existing points of diversion to the Project site. Pipeline diameters will vary by need and would be sized upon final engineering design. It is estimated that pipeline sizes will range from 8 to 14 inches, depending upon the required flows. The pipeline route would cross the area subject to the proposed right-of-way as well as private lands adjacent to that area. A main waterline will be constructed from the existing point of diversion, located approximately 50 feet southwest of the northeast section corner of Section 23, Township 16 South, Range 48 East. The line will depart the point of diversion (across a private right-of-way) and head in a northeasterly direction approximately 100 feet to fall within the proposed Project right-of-way; it will then head in a northerly direction to the Project power blocks, assembly hall and office building.

To address the NPS, USFWS, and BLM concerns that the proposed groundwater withdrawals associated with the proposed Project—in combination with existing withdrawals in the vicinity of Devils Hole and the Ash Meadows National Wildlife Refuge (NWR)—may pose a risk of adversely affecting federal rights and resources, the Proponent has agreed to acquire an additional 236 afy of existing water rights within the Amargosa Desert Hydrographic Basin. The 236 afy consists of 204 afy identified as “Minimization Water Rights” (see Appendix A), and an additional 32 afy to offset the potential reduction in groundwater return flow as a result of changing the manner of use from agricultural to industrial. The acquisition of the additional 236 afy of existing groundwater in the basin will most likely be obtained from existing water

rights permitted for agricultural use. At this time, it is unknown where the additional water rights will be obtained.

2.3.5.2 Water Treatment

Water used for power (steam) cycle feedwater makeup, mirror washing, ancillary equipment heat rejection, and domestic uses would require treatment for reduction of total dissolved solids (TDS). The groundwater will first be treated by a clarifier, followed by reverse osmosis (RO) and a demineralized process prior to being directed to a demineralized water storage tank. Demineralization is accomplished by either a distillation processes (evaporation/condensation) or membrane processes such as RO or electrodialysis reversal. Selection of the demineralization process to be used at the Project would be made during the final design process, but would not change the assessment of environmental effects included in this Final EIS.

In order to provide the demineralized water quality needed for power cycle makeup, it would be necessary to use ion exchange demineralization as a final treatment step after RO. Ion exchange demineralization can be done using either permanently installed equipment or portable demineralizers. Permanently installed equipment requires regeneration on site, which requires storage and disposal of significant quantities of sulfuric acid and sodium hydroxide (caustic). Alternatively, portable demineralizers are taken off-site for regeneration at the supplier's facility, so no on-site storage of chemicals and disposal of regeneration wastes is required. Off-site regeneration is proposed for the Project. This would eliminate the need to store regeneration chemicals on site and minimize on-site production of hazardous wastes. These demineralizers would be provided as forklift-moveable fiberglass bottles that would be traded out when exhausted and returned to the supplier for regeneration. Demineralization systems would be installed at each power block to minimize piping and provide the best water quality.

To minimize water consumption in the dry-cooled process (see Figure 2-5), process water from the RO unit used to reduce the dissolved mineral content of soften well water may be used for either dust suppression or as make up water for the auxiliary cooling tower. Blowdown from the steam cycle will be used as makeup to the small cooling tower. Blowdown from the auxiliary cooling tower will be sent to the evaporation ponds for disposal.

Reject water is water that has reach a high concentration of solids and is not longer suitable process water use. Reject water will be directed to the evaporation ponds for disposal. Process water is treated water of high quality suitable for cooling water, steam cycle water and dust control.

Up to three covered water tanks would be constructed at each power block. These include a service water tank, a demineralized water tank, and a RO reject water storage tank and dust control water storage tank. Final capacities will be determined during detailed engineering. Each tank will be a vertical, cylindrical, field-erected steel tank supported on foundations, consisting of either a reinforced concrete mat or a reinforced concrete ring wall with an interior bearing layer of compacted sand supporting the tank bottom.

Water from the Project well will be used as a potable water source and may require treatment to meet public health requirements for domestic potable water supplies. The Proponent would use a

desalination process for water treatment. Following desalination, the water would require addition of chlorine to prevent growth of pathogenic organisms. A Public Water System Permit for a non-community water system would be obtained from the NDEP – Bureau of Safe Drinking Water (NRS 445, NAC 445A, 450 through 445A.6731).

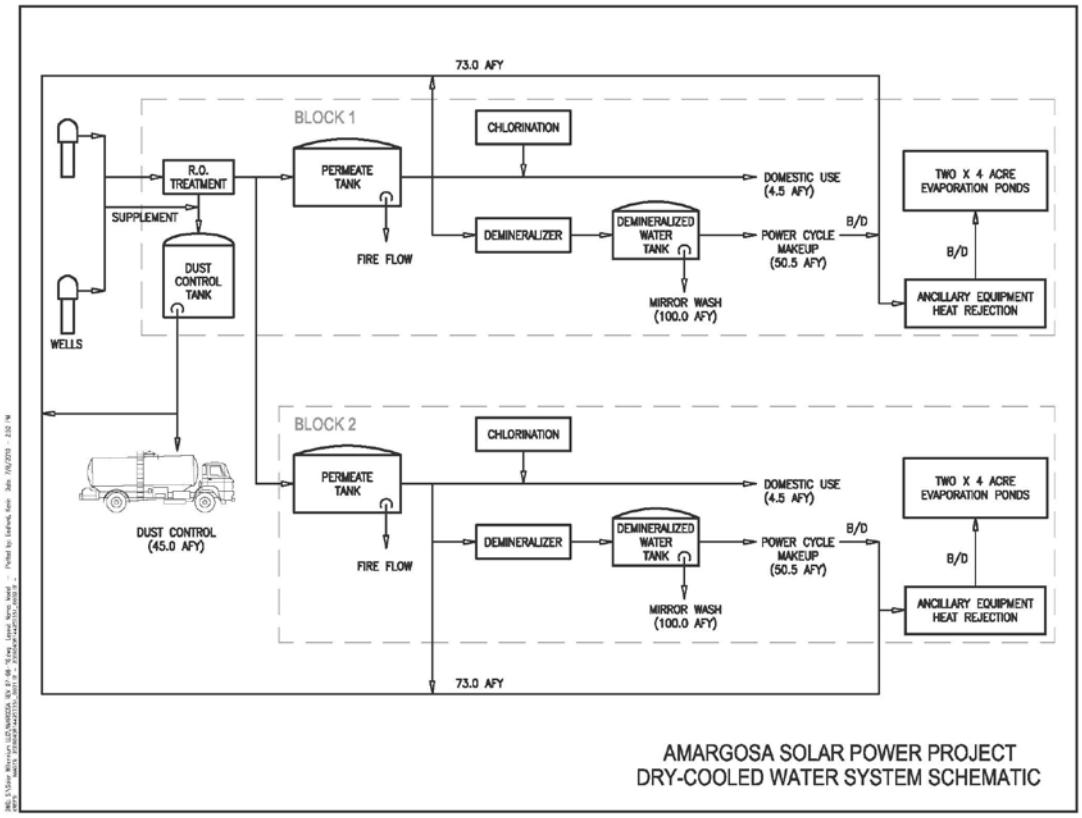

Figure 2-5 Dry-Cooled Water System Schematic

2.3.5.3 Water Needs during Construction

Project construction is expected to occur over a total of 39 months. Average construction water use at the site is estimated to be approximately 752,000 gallons (about 2.3 afy) per working day. Total water use for the duration of the construction phase of the Project is estimated to be approximately 600 afy (1,950 acre-feet over the 39 month construction period). Construction water will be sourced from a well within close proximity to the site and piped to the site for use by the contractor. Potable water during construction will be brought to the site in trucks and held in day tanks. Temporary easements on private land will be in place for the duration of the construction period for access to water wells.

Water needs for construction related activities include:

- Dust control for areas experiencing construction work as well as mobilization and demobilization

- Dust control for roadways
- Water for grading activities associated with both cut and fill work
- Water for soil compaction in the utility and infrastructure trenches
- Water for soil compaction of the site grading activities
- Water for soil stockpile sites
- Water for the various building pads
- Water for concrete pours on site

Dust control during grading will require considerable amounts of water during construction. By minimizing the period of time between initial ground disturbance and installation of the completed solar arrays, water used for construction dust control would be minimized. Sequencing of the grading activities in the solar fields will be performed to minimize the need for dust control water as illustrated in Figure 2-6 below.

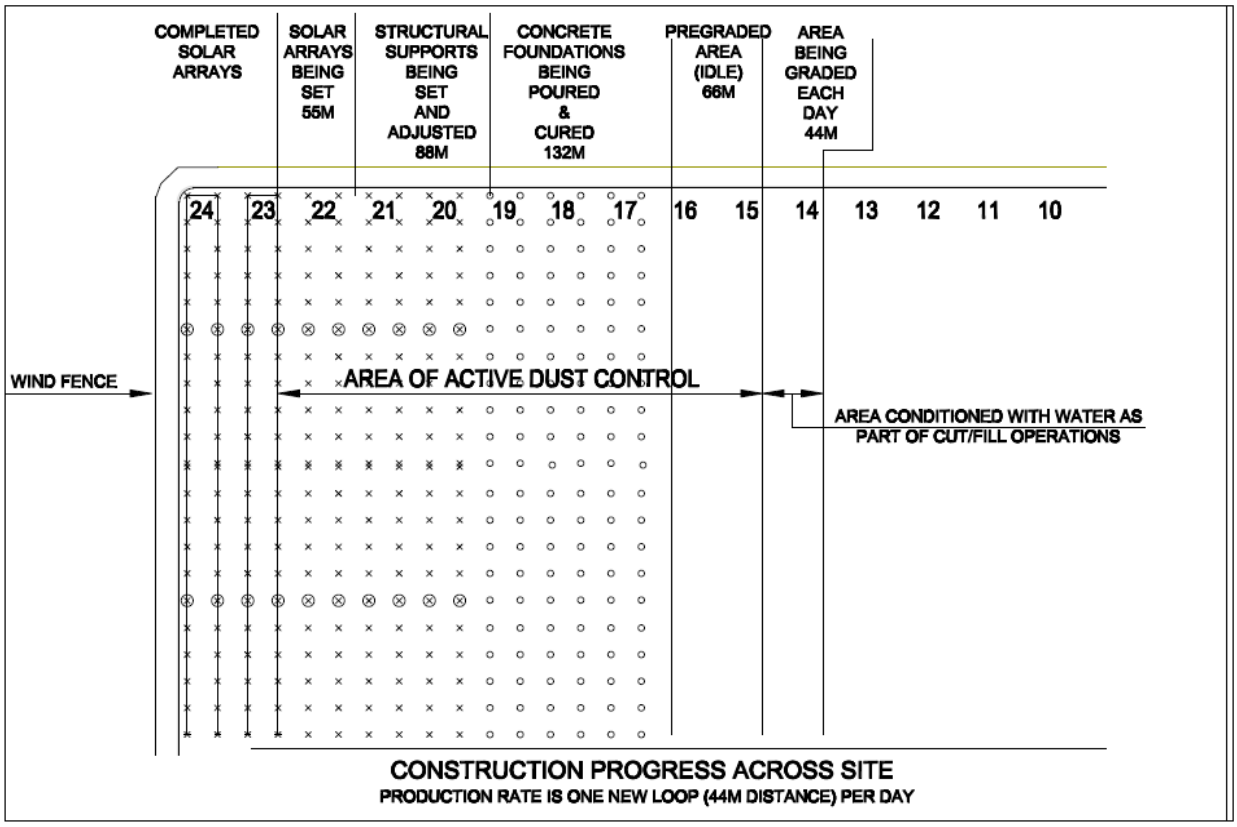

Figure 2-6 Construction Progress Across Site

The NDEP is responsible for administering the state's stormwater management program. The state has also delegated authority to local entities to develop and implement stormwater plans. The NDEP requires all construction sites disturbing more than 1 acre to obtain National Pollutant Discharge Elimination System (NPDES) permit coverage under the federal CWA.

Best Management Practices (BMP) for the minimization of construction water (i.e., the covering of stockpiles of soil, stabilizing roadways, etc.) will also be employed. The *Nevada BMP Guide*, a publication of the NDEP, will be used as a reference in establishing Project-specific BMPs.

2.3.5.4 Water Needs during Operations

Water needs during operation for both the preferred dry-cooled and wet-cooled alternatives are summarized in Table 2-4. Operational water needs for the dry-cooled preferred design and the wet-cooled alternative design are virtually identical for all uses except for the very large additional demand for water for steam cycle condensing of the wet-cooled design.

The average total annual water usage under the dry-cooled option is estimated to be approximately 400 afy, which corresponds to an average flow rate of about 248 gallons per minute. Usage rates will vary during the year and would be higher in the summer months when the peak maximum flow rate could be as much as about 50 percent higher for the ancillary equipment heat rejection process. Equipment sizing would be consistent with peak daily rates to ensure adequate design margin.

Table 2-4 Summary of Operational Water Usage

Rate of Use	Annual Average (afy) Dry-Cooled	Annual Average (afy) Wet-Cooled
Power Cycle Heat Rejection	0	4,409
Power Cycle Makeup Water *	101	101
Mirror Wash Water	200	200
Domestic Potable Water	9	9
Dust Suppression Water	45	45
Ancillary Equipment Heat Rejection	146	0**
Totals (rounded)	400	4,600

* Power cycle makeup will be recycled and is not included in the consumptive use total
** Ancilliary equipment will be cooled with cooling water from the main cooling tower

Cooling constitutes the most significant water use ranging from 4,409 afy for a wet-cooled plant to 146 afy for the dry-cooled alternative. Mirror washing constitutes the largest and second largest water use (200 afy) for dry- cooled and wet-cooled plants, respectively. To facilitate dust and contaminant removal, water from the primary desalination process, RO water, would be used to spray clean the solar collectors on a weekly or as-needed basis, determined by the reflectivity monitoring program. This mirror washing operation is done at night and involves a water truck spraying demineralized water on the mirrors in a drive-by fashion. It is expected that the mirrors will be washed weekly in winter and twice weekly from mid- spring through mid-fall. The

mirrors are angled down for washing therefore water does not accumulate on the mirrors. Wash water falls from the mirrors to the ground and, due to the small volume, soaks in or evaporates with no appreciable runoff. Remaining rinse water from the washing operation is expected to evaporate on the mirror surface.

Power cycle makeup water (101 afy) is water used to replace water lost from low-pressure steam venting at the deaerator, minor leaks in the steam and condensate piping systems, and blowdown from the steam generator drum. The volume of steam cycle makeup water would be similar for both the wet- and dry-cooled options.

For both the wet- and dry-cooled alternatives, the by-product of the RO process, RO process water, may be beneficially reused as water for dust suppression or in the dry-cooled alternative makeup to the auxiliary cooling tower. Dust suppression (45 afy) and domestic potable water use (9 afy) also are similar for both the wet-cooled and dry-cooled options.

2.3.6 Waste Generation and Management

Project wastes would be comprised of non-hazardous wastes including solids and liquids and lesser amounts of hazardous wastes and universal wastes. The non-hazardous solid waste would primarily consist of construction and office wastes, as well as liquid and solid wastes from the water treatment and blowdown systems. Blowdown systems are typically used on the boiler and cooling tower to control dissolved solids concentrations of the working fluids by simply removing or blowing down some of the liquid with a high dissolved solids concentration and replacing it with makeup water, which has a relatively lower concentration of dissolved solids. Non-hazardous solid wastes from the blowdown process include a concentration of the dissolved solids found in the well water plus any chemical additives used to control corrosion,biofouling or scaling in the boiler or cooling tower. Non-hazardous solid wastes would be trucked to the nearest landfill, which is a Class I landfill located in Pahrump with no limit to the amount of daily waste. The alternate disposal location is Las Vegas if a Class II or Class III landfill is required.

Non-hazardous liquid wastes would consist primarily of domestic sewage and process wastewater. To manage the non recyclable non-hazardous domestic sewage wastes, a septic tank and leach field would be installed. Process waste water streams include RO system reject water, boiler blowdown, and auxiliary cooling tower blowdown. Boiler blowdown will be used as part of the makeup water for the auxiliary cooling tower. Auxiliary cooling tower blowdown will be sent to the evaporation ponds for concentration and disposal.

2.3.6.1 Hazardous Materials Management

Hazardous materials to be used during construction will include gasoline, diesel fuel, oil, lubricants, paint, and paint-related products (e.g., primer, paint thinner, other solvents). All hazardous materials used during construction and operation would be stored on site in storage tanks/vessels/containers that are specifically designed for the characteristics of the materials to be stored.

Secondary containment structures will be provided around any oil-filled transformers located outdoors, steam turbine generator lube oil tanks, HTF overflow and expansion vessels and any other oil containing tanks over 55 gallons without double walls or vendor supplied secondary containment. The containment will be sized to contain 125 percent of the fluid in the transformer or vessels with appropriate freeboard required per code. Additional equipment (such as HTF pumps, feedwater pumps, etc.) will be provided with 6-inch-tall curbs as appropriate.

Both construction and operation-phase hazardous waste will be recycled and reused to the extent possible.

Site-specific, safety-related plans and programs would be developed and implemented to ensure safe handling, storage, and use of hazardous materials (i.e., Hazardous Material Business Plan). Plant personnel would be supplied with appropriate personal protective equipment (PPE) and would be properly trained in the use of PPE and the handling, use, and cleanup of hazardous materials used at the facility, as well as procedures to be followed in the event of a leak or spill. Adequate supplies of appropriate cleanup materials would be stored on site.

The preparation of the SPCC Plan is the responsibility of the facility owner/operator (in this case, Solar Millennium); however, it must be certified by a professional engineer. By certifying the SPCC Plan, the Professional Engineer, having examined the facility in question, attests that: (1) he/she is familiar with the requirements of part 112; (2) he/she or an agent has visited and examined the facility; (3) the Plan has been prepared in accordance with good engineering practices, including consideration of applicable industry standards, and with the requirements of part 112; (4) procedures for required inspections and testing have been established; and (5) the Plan is adequate for the facility. Regardless of who prepares the SPCC Plan, it is the owner/operator who is responsible for complying with the Rule. A copy of the Rule is available at www.epa.gov/oilspill.

2.3.6.2 Wastewater

The preferred dry-cooled Project would produce four primary wastewater streams:

- Non-reusable sanitary wastewater produced from administrative centers and operator stations;
- Non-reusable cooling tower blowdown and;
- Partially recyclable boiler blowdown (to be used as cooling tower makeup) shall be directed to the evaporation ponds.

The amount of non-reusable sanitary wastewater produced depends on the number of people using the facilities, how the water is used (e.g., toilets, showers, kitchen sinks, etc.), and the types of facilities provided (e.g., port-a-johns, low-flush toilets, potable drinking water, etc.). Up to 9 afy will be required for potable water use.

Under either alternative, RO process water will be beneficially reused in conjunction with BLM-approved palliatives for dust control and as make up to the auxiliary cooling tower.

2.3.6.3 Wastewater Treatment

Waste stream associated with a dry-cooled plant include (1) auxiliary cooling tower blowdown, (2) boiler blow down, and (3) RO/ Demineralizer water reject. These waste streams will be recycled as much as possible to a RO system for recovery. The RO system is a high efficiency reverse osmosis system designed primarily for handling high total dissolved solids waste water streams. The RO system will recover 70 percent or more (depending on water quality) of this waste stream and will significantly limit the size of the required evaporation pond(s). In certain operational conditions such as during start up, some of the waste water sources such as auxiliary cooling tower blowdown or boiler blowdown, may not be recoverable and would be sent directly to an evaporation pond.

The waste water treatment system would require two 4-acre evaporation ponds per power block. Two ponds were selected for reliability. The plant would operate on one pond for approximately 24 months, and then switch to the second pond. Approximately 18 months would be required for one pond to evaporate and be ready for use again. If a pond requires maintenance or solids removal, the plant still could operate with the other pond. The evaporation ponds would be double-lined and covered with narrow-mesh netting to prevent access by ravens and migratory birds in accordance with applicable regulations. If required, residual non-hazardous solid wastes would be trucked to the nearest landfill, which is a Class I landfill located in Pahrump. The alternate disposal location is Las Vegas if a Class II or Class III landfill is required. The above waste streams will be determined in the 401 Wastewater permit decision.

Sanitary wastes produced during construction would be held in chemical toilets and transported off-site for disposal by a commercial chemical toilet service. Any other wastewater produced during construction such as equipment rinse water would be collected by the construction contractor in Baker tanks and transported off-site for disposal in a manner consistent with applicable regulatory requirements.

During operations, sanitary wastes would be collected for treatment in septic tanks and disposed via leach fields located at the power block and at the administration and warehouse areas. Smaller septic systems would be provided for the control room buildings to receive sanitary wastes at those locations. Based on the current estimated average of 185 employees on a 24-hour, 7 day per week work schedule, a total leach field area of approximately 16,500 square feet would be required. It might be economical and expedient to provide permanent, portable, chemical toilets at remote areas of the operational Project site.

At this time, the leach field is anticipated to be sited adjacent to the bioremediation field. However, the final location will be determined following additional engineering design. The Proponent would coordinate the development of the leach field and bioremediation facility with NDEP as part of their permitting and approval process with that agency.

2.3.7 Bioremediation Unit

The HTF for the solar fields will be diphenyl/biphenyl oxide. Dowtherm A and Solutia VP-1 are commercial products that have been used in concentrated solar trough plants to date. The diphenyl/biphenyl oxide mixture is not classified as a hazardous material by the USDOT, nor is

it listed under EPA CERCLA regulations. However, this material, when discarded, may be a hazardous waste as that term is defined by the Resource Conservation and Recovery Act (RCRA), 40 CFR § 261.24, due to its toxicity characteristic.

While the collector design has advanced to an excellent level of performance and reliability, occasional small spills of HTF can occur, primarily due to equipment failures. Spill management procedures would be implemented to report, contain and clean up any such spill. If a line worker or other staff observes a spill or release, the system operators in the power block would be notified and the affected collector loop promptly shut down. An appropriately equipped crew would make any necessary equipment repairs and remove any hazardous wastes to an on-site bioremediation facility that utilizes indigenous bacteria to digest the hydrocarbon contamination.

The two solar fields would share the same bioremediation unit to bio-remediate or land farm soil contaminated from releases of HTF. Each bioremediation facility would comprise an area of about 400 feet by 800 feet (7 acres total). Each bioremediation facility would utilize naturally occurring bacteria to metabolize hydrocarbons contained in HTF contaminated soil. A combination of nutrients, water, and aeration facilitates the bacterial activity where microbes restore contaminated soil within 2 to 4 months. If required, remediated soils will be disposed of in an approved off-site landfill following decontamination.

2.3.8 Fire Protection

A Construction Fire Protection and Prevention Plan will be developed and followed throughout all phases of construction. The permanent facility fire protection system would be put into use during construction as soon as is practicable. Prior to the availability of this system, fire extinguishers and other portable fire-fighting equipment would be available on site. All equipment would be National Fire Protection Assocition (NFPA) and Occupational Safety and Health Administration (OSHA) compliant. Locations of portable firefighting equipment may include portable office spaces, welding areas, flammable chemical areas, and vehicles and other mobile equipment.

Once the Project is operational, an on-site fire protection system, designed in conformance with the NFPA and International Fire Code 2006 edition with Nevada State Fire Marshal Amendments, would be provided to limit personnel injury, property loss, and downtime in the event of a fire. The system would include a fire protection water system and portable fire extinguishers. Separate fire flow storage tanks would be sited within each of the two power blocks and an additional storage tank may be required for the Assembly Hall depending upon the final location of the structure. Firewater would be sourced from the Project well, and would be pumped to the site and stored in tanks for fire suppression. On-site fire pumps would be required to deliver water to the fire protection piping network for each of the buildings located within the power blocks.

During operations, all personnel who are actively involved in facility operations, such as plant operators, power plant maintenance personnel, security guards, solar field technicians and service personnel, will be trained to NHPA standards and provided information on the location and use of all onsite fire protection equipment and systems.

Personnel will have access and the support of the facility fire protection systems that address functional operations. The systems include a fire protection water system, foam generators, foam trucks, carbon dioxide fire protection systems, and portable fire extinguishers. Firewater would be supplied from water storage tanks located at each of the two power blocks on the site. One electric and one diesel-fueled backup firewater pump, each with a capacity of 5,000 gpm, would deliver water to the fire protection piping network. The piping network would be configured in a loop so that a piping failure can be quickly isolated with shutoff valves without interrupting water supply to other areas in the loop. Fire hydrants would be placed at intervals throughout the project site that would be supplied with water from the supply loop. The water supply loop would also supply firewater to a sprinkler deluge system at each unit transformer, HTF expansion tank and circulating pump area and sprinkler systems at the steam turbine generator and in the administration building. The use of foam trucks for HTF related incidents will be the primary response in combination with valve closures. Fire protection for each solar field would be provided by zoned isolation of the HTF lines in the event of a rupture that results in a fire.

In the event additional fire support is needed, the Amargosa Valley Volunteer Fire Department would be contacted. The Amargosa Valley Volunteer Fire Department Station is located at 851 E. Amargosa Farm Road, which is approximately 1.3 miles from the southeast corner of the solar field. If needed, mutual aid would be provided by the Beatty, Pahrump and Mercury fire departments.

Finally, as per the Nye County Development Agreement (Appendix F): "Developer shall annually, for as long as the ASPP is operating, provide emergency and fire protection training for up to four (4) individuals identified by County. County shall give priority to individuals who serve in the Amargosa Volunteer Fire Department. Such training shall be the equivalent of training provided to Developer's on-site personnel." In addition, the "Developer shall provide County, in a location selected by Developer, for as long as the ASPP is operating, access to a water supply for County's use in responding to fires within the Town of Amargosa. County agrees to utilize the water supply only for such purposes."

2.3.9 Telecommunications and Telemetry

The Project would have telecommunications service from providers who serve the Amargosa Valley area. Voice and data communications would be supported by a fiber optic system. This system would be augmented with wireless telecom equipment, particularly to support communication with Project staff dispersed throughout the large Project site.

With respect to telemetry, the Project would utilize electronic systems to control equipment and facilities operations throughout the Project site. Detailed information about the telemetry system to be used has not yet been developed at the current stage of the Project engineering design process. Information will be available once final engineering designs are complete.

2.3.10 Lighting System

On-site nighttime lighting for safety and security will be required during construction and operation. To reduce off-site lighting effects, as well as to reduce the energy requirements, an illumination study of proposed luminaries will be completed prior to the completion of a lighting plan design for optimum lighting placement. Lamp efficiency will also be factored into the lighting plan design, ensuring the avoidance of white-light bulbs. Luminaires will emit less than 1 percent of luminous flux above the horizon by incorporating the following design features:

- flat lens or full-shields
- luminaries classified as 'full cutoff'
- installation of luminaries under overhangs where feasible
- aim lighting where it is most needed for safety
- use timers and motion sensors to extinguish lights not in use
- set specific hours for lighting use for typical nights

AC lighting will be the primary form of illumination, but DC lighting will be included for activities or emergency egress required during an outage of the plant's AC system.

2.3.11 Roads, Fencing, and Security

Access to the Project site will be from Amargosa Farm Road via Valley View Boulevard. As stipulated in the Nye County Development Agreement (Appendix F), prior to commencement of construction, the Proponent is required to submit a Master Traffic Impact Analysis for review and approval by the County. The analysis will assess the construction and operations traffic and the impacts, if any, of the transportation of employees and equipment to and from the Project site. If the study determines that improvements are required, the Proponent will provide improvements required in the approved Master Traffic Impact Analysis in order to mitigate the traffic impacts of the Project.

The locations of the principal site entry gates for both the construction and the commercial operating period will be evaluated in consultation with the BLM, NDOT and Nye County Public Works to ensure that ingress and egress from the site does not have adverse impacts on existing traffic flow patterns.

Amargosa Farm Road is an existing public roadway maintained by Nye County Public Works. The roadway consists of 24 feet of asphalt/concrete pavement and roadside ditches on both sides. Amargosa Farm Road would be realigned, approximately 1,320 feet (0.25 mile) south of the existing roadway. The proposed roadway alignment would be coordinated with Nye County Public Works and be reconstructed in conformance with current standards.

Only a small portion of the overall plant site would be paved. Paved areas would include the site access road, the service roads to the power blocks, and portions of the power block (paved parking lot and roads encircling the steam turbine generator and solar steam generator areas). The remaining portions of the power block would be gravel surfaced. The solar field would remain unpaved and without a gravel surface in order to prevent rock damage from mirror wash vehicle traffic. An approved dust-suppression coating would be used on the dirt roadways within and around the solar field. Roads and parking areas located within the power block area and adjacent to the administration building and warehouse would be paved with asphalt.

The solar field and support facilities perimeter would be secured with a combination of chain-link and wind fencing. Chain-link, metal-fabric security fencing, 8-feet tall, with barbed or razor wire on top would be installed along the north and south sides of the facilities. Thirty-foot-tall wind fencing comprised of A-frames and wire and fabric mesh would be installed along the east and west sides of each solar field. The wind fence would be designed to serve two purposes; protect the solar field from blowing dust and sand and partially screen the solar facilities from surrounding properties and viewscapes. Controlled access gates would be located at the site entrance. In addition, the Project site will be surrounded by tortoise-proof fencing to prevent any Desert Tortoise from becoming entrapped by the flood control channels or impacted by work occurring within the facility.

Along the east side of the Project area, an introduced landscape buffer will be added between the perimeter fencing and Sandy Lane as per the Nye County Development Agreement (Appendix F). The buffer will include walking trails and vegetation.

2.3.12 Temporary Construction Workspace, Yards, Staging Areas

An assembly hall would be built for field fabrication facilities and storage of equipment. This building, to be located south of the Amargosa Road realignment, might become permanent depending on the need for additional permanent warehouses for spare parts or maintenance work. Indoor storage space would be required only for weather sensitive items such as control/electrical panels, or small parts that could easily be misplaced. Some space for material requiring temperature and humidity control would be provided. Other items would be stored outdoors on raised platforms with proper covers or temporary shelters. Construction-area lighting will be provided at the warehouse locations. At the areas designated on the site laydown plan, construction subcontractors would provide their own warehousing facilities needed for their materials.

In addition to the permanent plant roads and parking, construction roads and parking would be required to provide access to construction facilities and the laydown area. Construction parking space would be provided near the construction office complex and construction laydown areas. Temporary roads would be all-weather, gravel surfaced; have sufficient width; and be effectively located to accommodate high-efficiency construction traffic. The parking area would have barriers to control parking patterns. The construction parking area, which will be used for both phases of construction, would accommodate approximately 400 vehicles.

Following contruction, temporary use areas would be revegetated and restored following BLM guidelines. Restoration efforts will minimize soil erosion and the potential for fugitive dust from disturbed sites.

2.3.13 Site Drainage and Earthwork

The existing topographic conditions of the Project site show an average slope of approximately 1 foot in 200 feet (0.5 percent) and general sloping in a southwesterly direction. The site consists of desert shrub and is traversed by numerous intermittent and braided washes within the Fortymile Wash watershed. The Fortymile Wash consists of an approximate 330-square-mile drainage area measured to the southern property line of the Project site. The section of the Fortymile Wash impacting the site is considered alluvial, based on site field investigation and review of aerial photography. The apex of the Fortymile Wash is clearly identifiable approximately 0.5 mile north of US 95. Under existing conditions, three primary discharge locations along the southern property boundary are apparent. It is the objective of the Project's stormwater management plan to perpetuate stabilized discharge in both quantity and manner at these three historic locations. A conceptual Stormwater Drainage Plan is provided in Appendix E.

The Project site would be graded generally following the existing contours of the site in order to minimize the amount of disturbance and to allow a balanced distribution of material. Flood protection of the property from off-site flows would be provided by means of a continuous concrete lined channel around the northern and western perimeter of the site, within the fence line. The channel would be designed to effectively intercept the 100-year storm event off-site runoff and convey the concentrated flow to the southwest corner of the property. The southwest corner of the property has been identified as one of the historic discharge locations of the Fortymile Wash. The channel would discharge within the property limits and energy dissipation facilities would be provided in order to disperse the concentrated flow back to a shallow sheet flow condition before the flow leaves the property boundary.

Additionally, a concrete lined channel is proposed along the eastern side of the solar field, inside the fence line, in order to intercept and collect flows impacting the site from the east (see Figure 2-1 and Figure 2-2). Similar to the Fortymile Wash channel, the concentrated flow would be released on the property in its historic location and an energy dissipation facility would be provided in order to return the flow to a shallow sheet flow condition before the flow leaves the property. Perimeter channels are recommended to be concrete lined due to the high velocity potential and for maintenance reasons. Off-site flows would be intercepted and conveyed around the site to ensure no direct contact with on-site stormwater runoff.

Due to the size of the solar field area, the site itself has potential to generate large storm flows during a rain event. For this reason, stormwater control facilities would be constructed to protect on-site facilities, and to convey stormwater runoff to historic discharge locations in both quantity and manner of flow.

The four primary (major) onsite channels, traversing the site north to south, provide 100-year event stormwater runoff interception from four equal divisions of the entire Project site. The two

power block areas contain the most sensitive equipment on the site and are therefore each located along one of the primary channels; thus achieving flood protection during a 100-year storm event. The stormwater runoff generated between the primary channels would be collected in a series of swales and small channels that would direct the flow to the appropriate primary channel.

All minor channels within each section would be designed to intercept and convey the 25-year storm event. Stormwater runoff in areas between the primary channels and in excess of the 25-year event would consist of sheet flow (shallow depth, low velocity) below the solar trough systems. This flow would eventually be intercepted by an appropriate primary channel prior to impacting a power block area. This concept was selected in order to reduce costs for on-site drainage facilities, while still providing desired flood protection.

All primary channels would be concrete lined. Concrete lined channels have been proposed for the following reasons: (1) to achieve channel reliability and integrity; (2) to provide a means for routine maintenance and sediment deposition removal; and (3) to achieve necessary channel width in conformance with the site design space limitations. Various culvert facilities would be utilized to convey storm flow below essential on-site and off-site roads for access and movement around the site.

In addition to conveyance facilities, an on-site detention basin would be used to limit post-development flows to pre-development limits. In 2009, a regional flood control alternative was presented to the BLM and Nye County staff. This alternative would provide a regional off-site detention basin at the apex of the Fortymile Wash located north of US 95 and would effectively and considerably reduce existing condition peak storm flow downstream of US 95. Reducing off-site peak flows impacting the site allows for a reduction in the size of the perimeter flood control facilities needed to protect the Project site. All properties downstream of the detention basin would benefit from this approach. Although all parties agreed to pursue this approach, coordinated funding, schedule variations, and design responsibility for such a facility were determined to be an overwhelming challenge at this time. Therefore, the alternative of building a regional detention basin north of US 95 is unlikely and the Project is proposing independent flood protection.

The power blocks would generally drain by sheet flow or swales to a small detention basin located near the power block. These basins would be designed to retain for a short duration prior to outfall to the nearest primary channel. Oil and chemical storage areas within the power blocks would have their own containment features.

The preliminary site grading plan is designed to be balanced; no import or export of soil is expected for general earthwork. When the geotechnical investigation report is available for the site, the grading plan would be adjusted to account for any loss in elevation that could occur. Engineered fill would be provided as required for equipment and structure foundations if recommended by the geotechnical report. Only soil material that has been approved by the BLM, in consultation with a licensed geotechnical engineer would be used for structural fill. Additionally, granular material might need to be imported for the use as road base and possible use below foundations. Grading of the site would commence at the beginning of the construction period and last over a period of approximately 24 months. Such an extended grading period

would require less water on a daily basis for grading operations and would require dust control over a smaller area at any given time. The total amount of cut is estimated to be approximately 7,500,000 cubic yards. The total amount of fill is currently estimated at approximately 8,900,000 cubic yards. As discussed above, once the final geotechnical report is available, the final grading plan will be prepared. The final grading plan will be adjusted to achieve a balanced site, with minimal to no import or export of material.

During construction and operation, a comprehensive system of management controls, including permanent and temporary site-specific BMPs, to minimize stormwater contact with contaminants and sediment transport would be implemented. An NOI application and Stormwater Pollution Prevention Plan (SWPPP) in accordance with the State of Nevada, NPDES Stormwater General Permit NVR 100000 will be filed with the NDEP prior to the initiation of any construction activities. The SWPPP will utilize BMPs for the environmental control of stormwater discharges to off-site areas that may be attributed to Project activities. The SWPPP will contain a comprehensive procedure for inspecting and repairing BMPs. The management controls may include:

- Erosion and sediment control BMPs during construction activities such as silt fence, straw waddles, gravel bags, dust control, inlet protection, and sediment traps
- Employee training program
- Good housekeeping programs
- Preventive maintenance programs
- Structural BMPs:
  - Temporary containment during maintenance activities
  - Permanent erosion and sediment control BMPs such as detention/sediment basin, diversion berms, riprap stabilization, concrete lined channels, and energy dissipation devices
  - Permanent secondary containment structures at chemical storage and process areas
- Materials, equipment and vehicle management practices
- Spill prevention and response programs
- Inspection programs

2.3.14 Construction Schedule, Manpower, and Sequencing

Construction would be managed by the Proponent. Several dozen major and minor subcontractors would be hired to undertake the myriad of mechanical, civil and electrical construction tasks. Prior to mobilization for construction, a detailed construction plan will be developed to define the construction supervisory and technical field organizations and staffing levels required for the Project. Major milestones of the planned construction schedule are as follows:

- Begin construction: fourth quarter 2011
- Unit #1 start of commercial operations: mid 2014
- Unit #2 start of commercial operations: by mid 2014/2015

Project construction is expected to occur over a total of 39 months. The Proponent would phase construction so that the first power plant would be operational approximately 1 year before the second plant becomes operational. Project construction will require an average of 650 employees over the entire 39-month construction period, with manpower requirements peaking at approximately 1,300 workers in Month 17 of construction. The construction workforce would consist of a range of laborers, craftsmen, supervisory personnel, support personnel, and management personnel. Chapter 3.9 – Socioeconomics provides a breakdown of the construction workforce by skill over the entire construction period.

Temporary construction parking areas would be provided within the power plant site adjacent to the laydown area. The plant laydown area would be used throughout the build out of the two solar units. The construction sequence for plant construction includes the following general steps:

- Site Preparation: This includes detailed construction surveys, mobilization of construction staff, grading, and preparation of drainage features. Grading for the solar field, power block, and drainage channels would be completed during the first 24 months of the construction schedule. Pre-construction survey work would consist of staking/flagging right-of-way and site area boundaries, work areas (permanent and short term), cut and fill staking, access and roads, transmission structure centers, foundation structure staking, and desert tortoise/endangered plants offsets. Staking/flagging would be maintained until final cleanup or reclamation.

- Linears: This includes the site access road and telecommunication line. The site access road and telecommunication line would be constructed during the first 6 months of the construction schedule in conjunction with site-preparation activities.

- Foundations: This includes excavations for large equipment, footings for the solar field, and ancillary foundations in the power block.

- Major Equipment Installation: Once the foundations are complete, the larger equipment will be installed. The solar field components would be assembled in an on-site erection facility and installed on their foundations.

- Balance of Plant: With the major equipment in place, the remaining fieldwork would be piping, electrical, and smaller component installations.

- Testing and Commissioning: Testing of subsystems would be conducted as they are completed. Major equipment would be tested once all supporting subsystems are installed and tested.

2.3.15 Operations and Maintenance

The Project site would be staffed 24 hours a day, 7 days per week during operations. A total estimated workforce of 100 full-time employees would be needed to staff the first phase of the Project (Unit #1). When the second of the 2 units comes online, a total of 170 to 200 full-time staff would be needed. The operations workforce would consist of plant operators and maintenance technicians working 12-hour shifts, and administrative personnel working 8-hour shifts per day.

Maintenance activities during operations would include daily inspection of field components, condition assessment of critical equipment, and routine lubrication of equipment. Some specialized maintenance would be performed by the equipment provider or other specialist contractors. Long-term maintenance would be performed against a defined service and replacement schedule.

Mirror washing would be conducted at night and involves a water truck spraying treated water on the mirrors in a drive-by fashion. It is expected that the mirrors would be washed weekly in winter and twice weekly from mid- spring through mid-fall.

Under normal circumstances, the plant switchyard would be controlled remotely, and routine inspections by personnel would occur on a monthly basis or as needed under emergency conditions. In addition, all of the switchyard structures would be inspected from the ground on an annual basis for corrosion, misalignment, and foundation condition. Ground inspection would include the inspection of hardware, insulator keys, and conductors. This inspection also would check conductors and fixtures for corrosion, breaks, broken insulators, and bad splices.

Road maintenance would be performed as needed. Paved roads would be swept, sealed, and/or overlaid as needed. Grading and drainage would be maintained for gravel and earthen roads.

A noxious weed management plan will be developed by the Proponent in consultation with the BLM. This plan will be implemented throughout the life of the Project to prevent the introduction and spread of noxious weeds as a result of Project activities.

2.3.16 Decommissioning

The lifespan of the proposed Project is expected to be at least 30 years. At the end of the Project's useful lifespan, the facilities would be either repowered or decommissioned. Due to the excellent solar resource at the Project site, repowering is a viable option. This might involve replacing the existing parabolic troughs with components that are more efficient, thereby extending the useful lifespan of the Project. Decommissioning would adhere to the requirements of appropriate governing authorities and would be in accordance with all applicable federal, state, and local law, regulations, and permits, including any reclamation requirements BLM specifically adopts for utility-scale solar projects. For this particular site, the decommissioning process would involve steps to dismantle and remove equipment, permanently stabilize soil and drainages, and regrade and reshape features as necessary. Consistent with BLM requirements, a detailed decommissioning plan would be developed in a manner that both protects public health and safety and is environmentally acceptable.

If approved, the right-of-way authorization for the proposed Project would include a required "Performance and Reclamation" bond to ensure compliance with the terms and conditions of the right-of-way authorization, consistent with the requirements of 43 CFR 2805.12(g). The "Performance and Reclamation" bond will consist of three components. The first component will be hazardous materials, the second component will be the decommissioning and removal of improvements and facilities, and the third component will address reclamation, revegetation, restoration and soil stabilization.

2.4 WET-COOLED ALTERNATIVE

Under the wet-cooled alternative, the Proponent would construct and operate two wet-cooled solar power plants, each with a nameplate capacity of 250-MW and a net output of approximately 242 MW. Each solar plant would be equipped with thermal storage capability and associated linear facilities. Construction and operation of a wet-cooled project would be similar to a dry-cooled plant. Plant components and layout are similar under both the wet- and dry-cooled alternatives; the primary differences are the amount of water used for plant operations, the need for cooling towers for heat rejection from the steam cycle for the wet-cooled alternative, and the area needed for the evaporation ponds. Table 2-2 lists the plant components for both the wet- and dry-cooled alternatives.

The wet-cooled alternative provides more efficient performance than the dry-cooling alternative. Specifically, the wet-cooled alternative offers approximately 11 MW greater electrical output during peak summer conditions than the dry-cooled alternative. The performance of the wet-cooled alternative is enhanced because wet-cooling relies primarily on evaporative cooling to remove heat from the circulating water. In contrast, a dry-cooled alternative uses convective heat transfer, which operates similar to a car's radiator. In the dry-cooled alternative, an air cooled condenser using a large array of fans that force air over finned tube heat exchangers cools the steam turbine-generator exhaust steam.

2.4.1 Water Source

Under the wet-cooled alternative, the well identified for use under the dry-cooled alternative, would supply a portion of the water required for operations. However, additional water supplies would be required under the wet-cooled alternative. The Proponent would either lease or purchase existing certified water rights for water needs during construction and operation of the proposed Project. The source of this additional water would be dependent on the availability of other water rights available for lease or sale in the Amargosa Desert Hydrographic Basin.

2.4.2 Water Use and Treatment

Water use under the wet-cooled alternative would include water needed for the wet cooling tower used to cool the steam cycle; water for solar collector mirror washing; makeup for the solar steam generator feedwater; dust control, potable water and fire protection. The large cooling tower required for the wet-cooled design replaces the small auxiliary cooling tower and the air-cooled condenser used in the dry-cooled thermal power plant design. Well water treated

in a water softening process will be used as the primary makeup water source for the cooling tower. In addition blowdown from the steam cycle would be used as a feed stream to the cooling tower (Figure 2-7). The greater volume of blowdown generated with the wet-cooled system, would be sent to evaporation ponds for disposal.

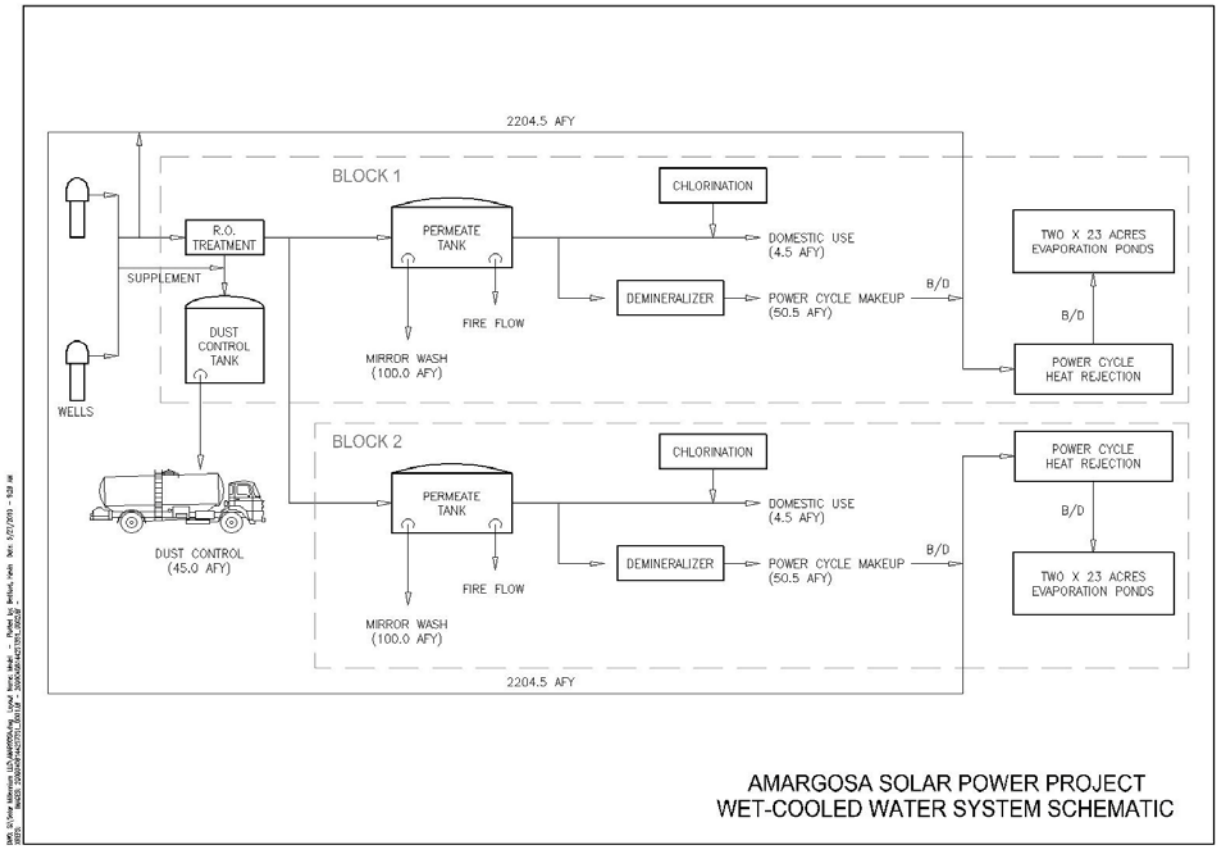

Figure 2-7 Wet- Cooled Water System Schematic

To maintain the chemistry of the water circulated in the cooling tower within an acceptable range, a combination of chemical addition, comprised primarily of an acid feed to inhibit scaling and a biocide to prevent biological growth, and continuous blowdown to control the concentration of total dissolved solids, would be used. Approximately 6 percent of the cooling tower flow would be blowndown and treated in a high efficiency RO system. Approximately 80 percent of this water would return to the cooling tower after processing. The remaining, high conductivity, RO reject water, approximately 88 afy, would be sent to evaporation ponds for disposal.

2.4.3 Wastewater

The wet-cooled alternative Project would produce similar wastewater streams as the dry-cooled alternative. The sanitary wastewater and reuseable water streams will be similar to the preferred dry-cooling option, with the exception that excess RO reject water and some of the steam generator blowdown would be used to supplement makeup flows into the large cooling tower. Cooling tower blowdown will be treated in a similar RO system as used in the dry-cooled alternative and recycled to the extent possible. As with the dry-cooled system, the waste stream from the RO system will be sent to the evaporation ponds for disposal.

2.5 NO ACTION ALTERNATIVE

NEPA regulations require that EIS alternative analyses "include the alternative of no action" (40 CFR §1502.14(d)). The No Action alternative must be included in the analysis so that the EIS clearly evaluates the consequences between the alternative methods of developing the proposed Project and the option of no development. In other words, the No Action Alternative provides a useful baseline for comparison of the environmental effects of the other alternatives. For this analysis, no action means that the BLM would reject the Proponent's proposal and would not grant the requested the right-of-way. Because the Project facilities would not exist, potential adverse environmental effects would not occur.

2.6 AGENCY-PREFERRED ALTERNATIVE

The BLM preferred alternative is the Proposed Action – Dry-cooled Alternative. The environmental consequences of the Proposed Action and Alternatives are described in Chapter 4 and summarized and compared in Table ES-1-4.

This page intentionally left blank.