2.0 Proposed Action and Alternatives

This chapter describes two action alternatives and the No Action Alternative, as required by the NEPA of 1969. It briefly discusses other alternatives that were considered by the Applicant, Western, and the BLM but eliminated from further analysis and the rationale for elimination. This chapter also describes the elements for construction, O&M, and decommissioning of the Proposed Project, which includes the wind energy facility and Western's proposed switching station. *Please note that although the switching station is a component of the Proposed Project, it is often referred to separately throughout this document because Western is a federal agency whose statutory, regulatory, and policy direction are distinct from the BLM's, including procedures and mitigation requirements that may differ from those associated with the BLM's ROW authorization for the wind energy facility*.

Subject to the BLM approval of the ROW application, construction of the Searchlight Wind 200-megawatt (MW) wind energy generation facility would commence in 2012, with generation and delivery of electricity to the grid by 2013. When completed, the wind energy facility would operate year-round for up to 30 years. Western proposes to construct and operate a new switching station as a separate federal action evaluated in this document. This new switching station will interconnect the Searchlight Wind Energy Project with Western's transmission grid system. Western would deliver the electricity to markets via the existing Western's Davis-Mead 230-kilovolt (kV) transmission line.

Unless otherwise cited, details regarding the Proposed Action are drawn from the Searchlight Wind Plan of Development (POD) (Duke Energy Corporation 2011), the Western ROW application, clarification meetings between BLM and the Applicant, Western and as appropriate, other agencies.

2.1 Description of the Proposed Action and Alternatives

2.1.1 Alternatives Development

This section outlines the process used by the BLM to develop alternatives to the Proposed Action. Under NEPA regulations (40 CFR § 1502.14), the BLM is required to evaluate not only the Proposed Action, but also reasonable alternatives including the No Action Alternative. Federal agencies are required to explore a range of alternatives, which are alternatives that are "practical or feasible from the technical and economic standpoint and using common sense, rather than simply desirable from the standpoint of the Applicant."

The range of alternatives considered was bounded on the upper end by the maximum number of turbines that the site could accommodate based on turbine manufacturer spacing recommendations, safety considerations, and topography. This project is subject to expensive development, transmission upgrade, and construction costs which add to the overall costs. In order for the project to achieve minimum commercial viability for purposes of meeting potential financing criteria, the minimum power generation requirement is 200 MW. The project achieves this minimum threshold of 200 MW using 87 Siemens 2.3 MW turbines. Below the 87-turbine threshold, therefore, the project becomes uneconomic.

2.1.2 Alternatives Considered and Carried Forward for Detailed Analysis in the Environmental Impact Statement

This section describes the No Action Alternative, the Proposed Action (96 Wind Turbine Generator [WTG] Layout Alternative), and the BLM Preferred Alternative (87 WTG Layout Alternative). Proposed Project features, construction methods, and O&M and decommissioning elements common to both action alternatives are detailed in Section 2.4. Proposed Project features, construction methods, and O&M and decommissioning elements detailed in Section 2.4 serve as the basis of the environmental impact analysis in Chapter 4, Environmental Consequences.

2.1.2.1 No Action Alternative

Under NEPA, the BLM must consider an alternative that assesses impacts that would occur if the Proposed Action was not approved and the application was rejected. The No Action Alternative assumes that the Searchlight Wind ROW application for the construction, O&M, and decommissioning of a wind-powered electrical generation facility and for Western's proposed switching station, would not be granted, and the Proposed Project would not be constructed. This alternative would maintain current BLM management practices for resources and allow for the continuation of resource uses at levels identified in the BLM 1998 Las Vegas RMP. This alternative would also incorporate any management decisions that have been made subsequent to revision of the 1998 Las Vegas RMP. It includes moderate levels of resource protection and development, including wildlife habitat protection, range improvements, vegetation treatments, soil erosion controls, and fire management. In addition, recreation activities (including off-highway vehicle [OHV] use), and land development (mining, energy, and communication) efforts would continue at present levels.

This alternative generally satisfies most commodity demands of public lands, while mitigating impacts on sensitive resources. However, it does not meet specific provisions and goals of the Energy Policy Act of 2005 and recent Department of the Interior Instruction Memoranda (IM) and Secretarial Orders regarding renewable energy development (see Section 1.3.1-BLM's Purpose and Need). Under the No Action Alternative, the purpose and need for the Proposed Project would be provided by other means.

2.1.2.2 Proposed Action – 96 WTG Layout Alternative

The 96 WTG Layout Alternative was developed because this is the maximum numbers of turbines that can be placed in the Proposed Project area. Originally, the Applicant had considered alternatives with more turbines in the area; however, more turbines were not technically feasible (See Section 2.2-Alternatives Considered, but not Analyzed in Detail).

Under this alternative, BLM would authorize the Applicant to construct, operate and maintain, and decommission an approximately 220 MW wind energy facility on in an area encompassing approximately 18,949 acres of BLM-managed land in Nevada, approximately 60 miles southeast of Las Vegas, and 2 miles east of Searchlight, Nevada. The project site is accessible from US Interstate 95 (US-95) and Nevada SR 164 (also designated as Cottonwood Cove Access Road east of Searchlight and within the Lake Mead NRA boundary) (Figure 1.3-1). The Searchlight Wind energy facility would begin generating power as soon as the WTGs and associated infrastructure (including Western's proposed switching station) were constructed. It is anticipated that the wind energy facility would operate year-round for up to 30 years. Western's proposed switching station would remain in service even after decommissioning of the wind energy facility.

This alternative would involve the construction of up to 96 2.3-MW WTGs that would provide up to 220 MW of electricity. The linear strings of WTGs would be sited on ridgelines and plateau areas bounded by Golden Rod Snyder Road on the south, US-95 on the west, Fourth of July Mountains in the east, and extending a few miles north of Cottonwood Cove Road (SR 164). The towers within each string would be sited approximately 750 feet apart (Figure 2.1-1). The locations of depicted proposed WTGs, roads, power lines, and other facility-related construction elements could slightly vary based on environmental, engineering, meteorological, and/or permit requirements.

Electrical power generation from the 96 WTGs and associated infrastructure would be collected, converted, and delivered to Western's proposed switching station as outlined under the Proposed Action.

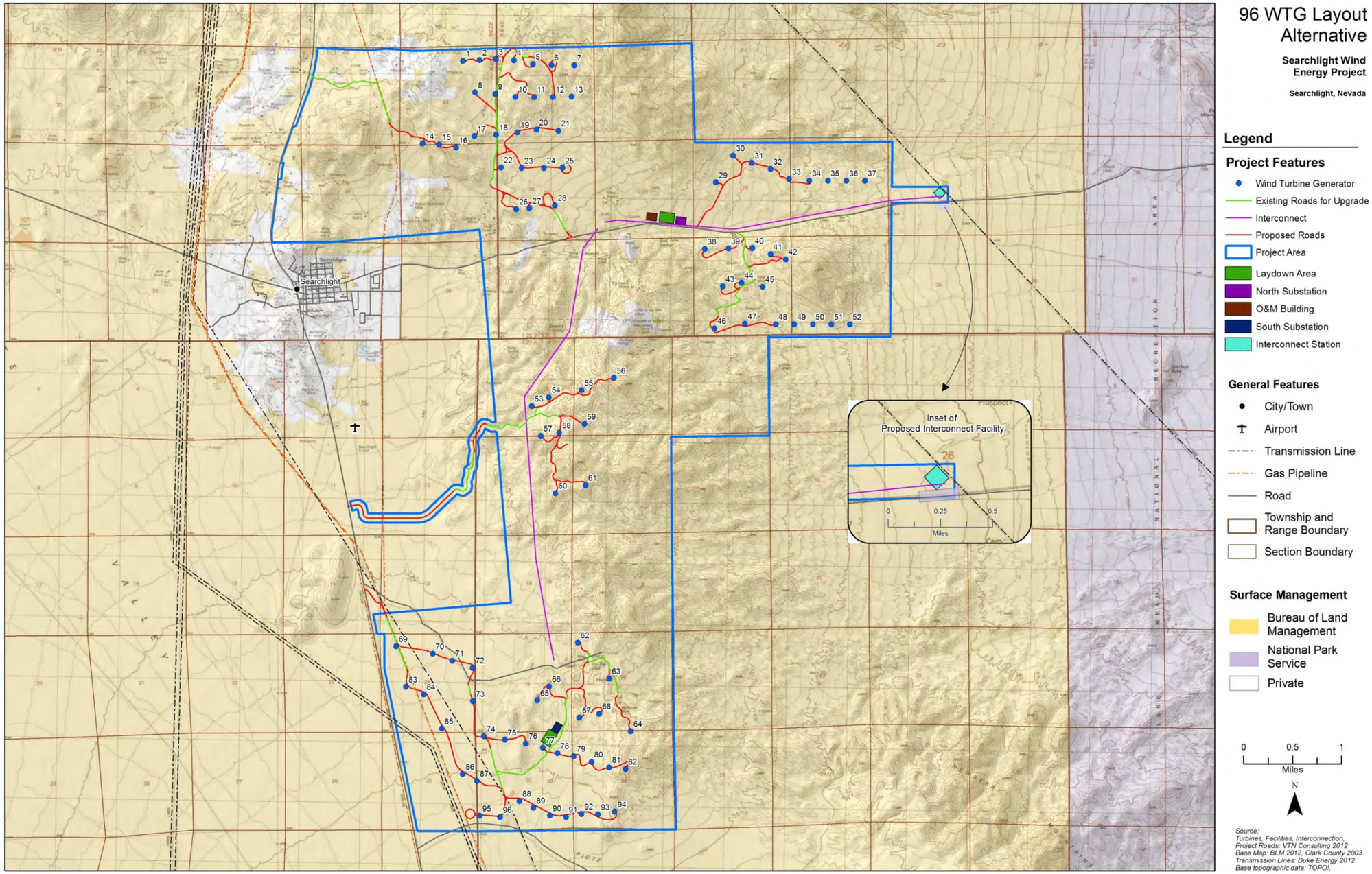

Figure 2.1-1. 96 WTG Layout Alternative

Four permanent wind-speed measuring MET towers and an O&M facility would be sited within the Proposed Project area. All WTG control systems would be connected by an underground communications system to the O&M facility for computerized automated monitoring of the entire project. A temporary cement batch plant, rock crusher, and construction operations trailer pad would also be located on site.

A total of 37.6 miles of gravel roads would be needed to access, operate, and maintain the Proposed Project. Under the 96 WTG Layout Alternative, 9.2 miles of road reconstruction would be required, and 29 miles of new roads constructed. Facilities associated with the 96 WTG Layout Alternative would permanently occupy approximately 160 acres. Additionally, approximately 249 acres would be affected during construction. All project features associated with the 96 WTG Layout Alternative are outlined in Table 2.1-1.

Table 2.1-1. 96 WTG Layout Alternative Project Features

Project Feature	Amount
Project production capacity (MW)	220.8 MW
Number of WTGs	96
WTG nameplate (each)	2.3 MW
Project roads Existing (modified to 16 feet width) Existing (modified to 36 feet width) New (16 feet width) New (36 feet width)	37.6 miles (total) 0.5 miles 8.7 miles 1.7 27.3 miles
Number of substations	2
Number of operations and maintenance facilities	1
New overhead transmission lines (230 kV) North Substation to Western's Interconnection Switching Station South Substation to North Substation	8.7 miles (total) 2.6 miles 6.1 miles
New Collection Lines (34.5 kV) New overhead collection lines Underbuild collection lines	7.9 miles (total) 5.2 miles 2.7 miles
Number meteorological stations	4

2.1.2.3 BLM Preferred Alternative – 87 WTG Layout Alternative

Under this alternative, BLM would authorize the Applicant to construct, operate and maintain, and decommission an approximately 200 MW wind energy facility on BLM-administered lands within the same location as described under the Proposed Action. This alternative would begin generating power as soon as the wind energy facility and associated infrastructure, including the Western's proposed switching station and ancillary facilities, were constructed. It is anticipated that the wind energy facility would operate year-round for up to 30 years. Western's switching station portion of the project would remain in service even after decommissioning of the wind energy facility.

The 87 WTG Layout Alternative would involve the construction of up to 87 2.3-MW WTGs that would provide up to 200-MW of electricity. The linear strings of WTGs would be sited on ridgelines and plateau areas bounded by Golden Rod Snyder Road on the south, US-95 on the west, Fourth of July Mountains in the east, and extending a few miles north of SR 164. The towers within each string would be sited approximately 750 feet apart (Figure 2.1-2. The locations of depicted proposed WTGs, roads, power lines, and other facility-related construction elements could vary slighly based on environmental, engineering, meteorological, and/or permit requirements.

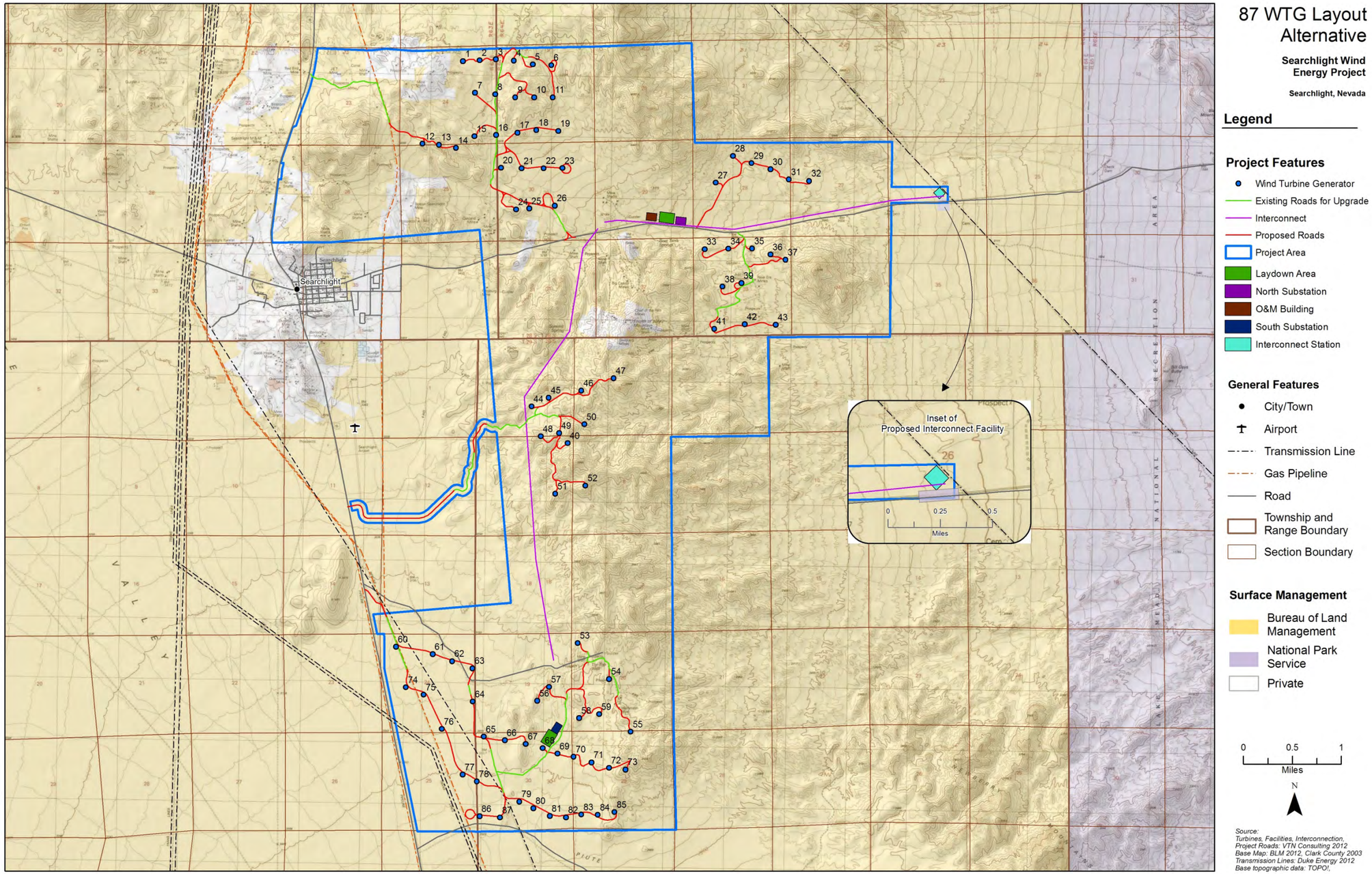

Figure 2.1-2. 87 WTG Layout Alternative

Electrical power generated from the WTGs would be delivered from transformers at the base of each WTG to two project electrical substations via an underground collection system. The substations would convert the voltage of the wind energy facility electrical collection system into the transmission line voltage. A 6.1-mile overhead transmission line would connect the two project substations. A 2.6-mile-long transmission line would interconnect the Searchlight Wind Energy Project with Western's existing Davis-Mead 230-kV transmission line east of the project site. Western proposes to construct a new switching station and associated access road, transmission service distribution line, and development area adjacent to the existing Davis-Mead transmission line.

Four permanent wind-speed measuring meteorological towers (MET) and an O&M facility would be sited within the Proposed Project area. All WTG control systems would be connected by an underground communications system to the O&M facility for computerized automated monitoring of the entire project. A temporary cement batch plant, rock crusher, and construction operation trailer pad would also be located on the site.

A total of 35.9 miles of gravel roads would be needed for construction, O&M, and decommissioning activities. Under this alternative, 8.6 miles of road widening and improvement would be required, and 27.3 miles of new roads would be constructed.

Facilities associated with the 87 WTG Layout Alternative would permanently occupy approximately 152 acres. Construction of the facilities would affect approximately 230 acres. All project features associated with the 87 WTG Layout Alternative are outlined inTable 2.1-2.

In accordance with NEPA, the BLM is required by the CEQ (40 CFR 1502.14) to identify their preferred alternative for a project in the Draft EIS, if a preference has been identified. The preferred alternative is not a final agency decision; rather, it is an indication of the agency's preference. The BLM has selected the 87 WTG Layout Alternative as the BLM-preferred alternative based on the analysis in this FEIS because this alternative best fulfills the agency's statutory mission and responsibilities, considering economic, environmental, and technical factors. It is the alternative with the least environmental effects regarding noise, biological resources, and visual resources that meets the purpose and need..

Table 2.1-2. 87 WTG Layout Alternative Project Features

Project Feature	Amount
Project production capacity (MW)	200.1 MW
Number of WTGs	87
WTG electric generating capacity nameplate	2.3 MW
Project roads Existing (modified to 16 feet width) Existing (modified to 36 feet width) New (16 feet width) New (36 feet width)	35.9 miles (total) 0.5 mile 8.1 miles 1.7 miles 25.6 miles
Number of substations	2
Number of operations and maintenance building	1
New overhead transmission lines (230 kV) North Substation to Western's Interconnection Switching Station South Substation to North Substation	8.7 miles (total) 2.6 miles 6.1 miles
New collection lines (34.5 kV) New overhead collection lines Underbuild collection lines	7.9 miles (total) 5.2 miles 2.7 miles
Meteorological towers	4 (existing)

2.2 Action Alternatives Considered But Not Analyzed in Detail

In determining the scope of alternatives to be considered, the emphasis is on what is "reasonable" rather than whether the Applicant prefers or is capable of performing a particular alternative. Reasonable alternatives include those that are practicable or feasible from a technical and economic standpoint and

using common sense, rather than those that are simply desirable from the standpoint of the Applicant (CEQ 1981).

Initially, the BLM considered two additional alternatives: 161 WTG Layout Alternative and 140 WTG Layout Alternative. The 161 WTG Alternative was the Applicant's original proposed action developed to maximize the power generation potential of the site. Additionally, the 140 WTG Alternative was developed to reduce impacts on visual resources and air traffic safety in the area. However, based on public scoping meeting input, agency discussions, and further analyses both of these alternatives were rejected based on the potential for environmental impacts and technical and economic considerations and eliminated from further analysis. See Sections 2.2.1 and 2.2.2 for detailed discussion on elimination of these alternatives.

In addition, Western considered three additional alternatives for siting of the proposed switching station, but eliminated these sites from further analysis for technical reasons, as discussed below in Section 2.2.3. Western's primary selection criteria was to locate the switching station close to the Davis-Mead 230-kV transmission line and meet BLM resource planning requirements, including siting the switching station outside of special management designation lands, except for a 0.5-mile area adjacent to a federally designated highway.

2.2.1 161 WTG Layout Alternative

The 161 WTG Layout Alternative, originally proposed by the Applicant in their ROW application to the BLM, specified siting 161 WTGs with a maximum project power-generating capacity of 370 MW (Figure 2.2-1). During public scoping, community concerns were raised regarding the potential visual impacts on the town of Searchlight and surrounding landscapes. Specifically, residents and tourists/recreationists were assumed to potentially be negatively affected by direct facility impacts (density of WTGs to the north and east of Searchlight) and scenic quality impacts within and surrounding the project area. Specifically, residents were concerned because the 161 WTG Layout "surrounded" the town of Searchlight, and this configuration received opposition from town residents. Additionally, public concerns regarding air traffic safety resulting from facility height, lights, or communication/signal interference were raised during the public scoping process. These concerns were raised at several public meetings conducted by the BLM and the Clark County Commissioner for the project area, in meetings with town residents and in the scoping process.

Additionally the Applicant conducted detailed engineering and technical analysis of this alternative. This involved consideration of turbine locations and heights, wind direction, terrain roughness and wind shear. Wind shear is the difference in wind speed and direction over a relatively short distance in the atmosphere, which commonly occurs over areas featuring marked changes in elevation. Excessive wind shear is important because it can interfere with the normal operation of a wind turbine and may decrease its efficiency and lifetime. Additionally, the wind created from 1 turbine can affect the operation of another turbine. This potential turbine-turbine interaction was evaluated for both turbulence and turbine wake, which also can create wind shear and impair their effectiveness. This evaluation was accomplished in coordination with the turbine manufacturer and through use of tools such as wind resource analysis and digital terrain models. Based on the results of the analysis, the Applicant abandoned this alternative because it was not technically or economically feasible so BLM eliminated this alternative from detailed consideration.

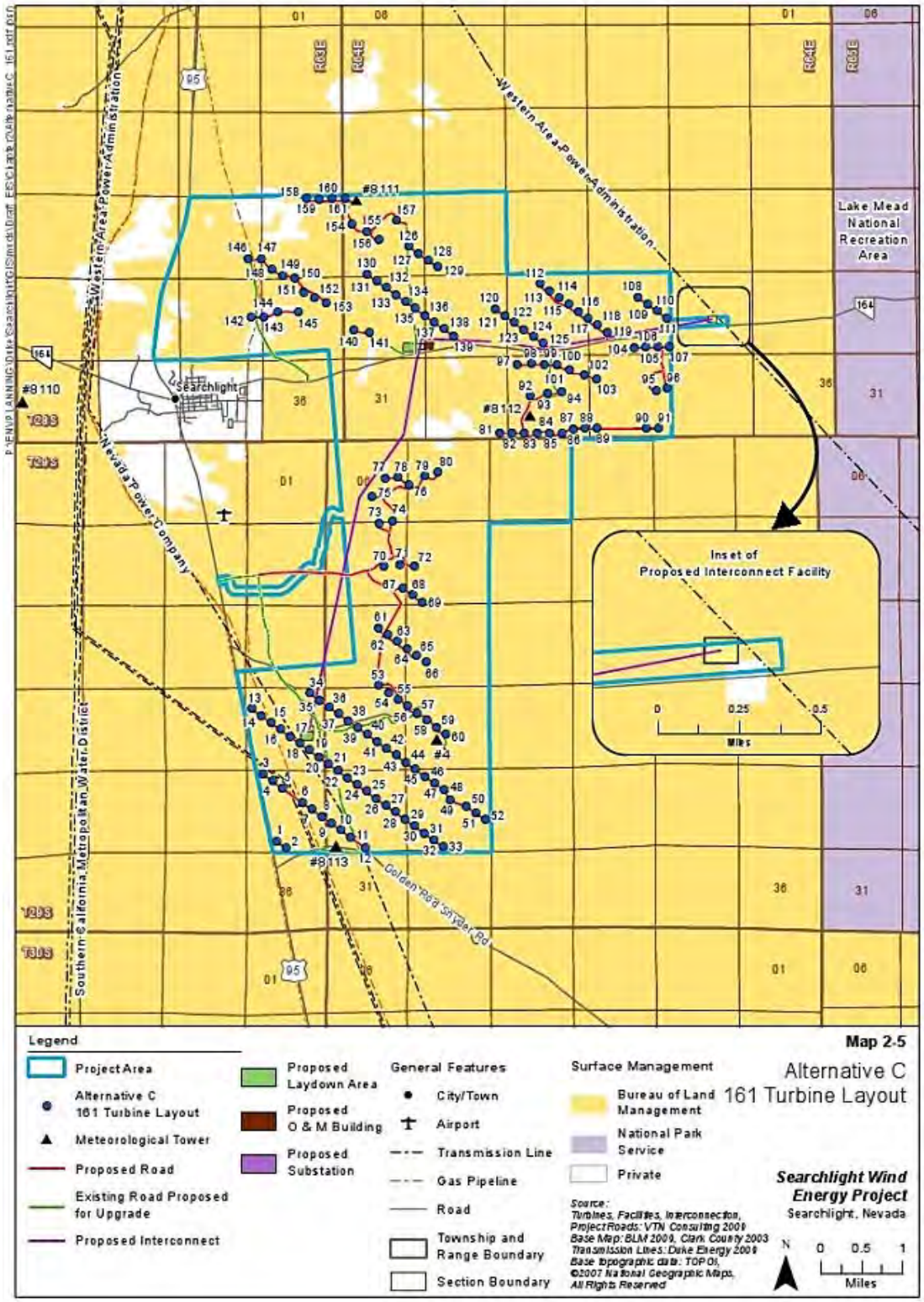

Figure 2.2-1. 161 WTG Layout Alternative

2.2.2 140 WTG Layout Alternative

The 140 WTG Layout Alternative was developed based on early public input and the elimination of the 161 WTG Alternative, and consisted of 140 WTGs with a maximum project power-generating capacity of 325 MW (Figure 2.2-2). This alternative would reduce the number of WTGs by 21 from the original proposal, thereby attempting to address the concerns regarding density, visual and scenic quality impacts, and air traffic safety, and the technical considerations previously discussed. Through additional consultations with the public, further concerns were raised regarding the potential impacts on aesthetics. This layout, like the 161 WTG configuration, had turbines on ”surrounding” the town of Searchlight particularly on the north and east, and town residents raised the same concerns with regards to the aesthetics of such a configuration. Likewise, the same public concerns were raised with regard to air traffic considerations associated with the Searchlight airport.

In response to concerns raised, and as more detailed site information was developed, the Applicant conducted further detailed engineering and technical analyses of the 140 WTG configuration. In these analyses individual turbine placement or ‘micrositing” was conducted. Considerations included slope, construction access, and costs. The wind on steep slopes tends to be turbulent and has a vertical component that can affect turbines. Specific setbacks from the edges of ridgelines and hilltops are needed to avoid the impacts of this vertical wind component. Then the turbine-turbine interaction and spacing were evaluated in an iterative process because as a single turbine location was moved the effects on the neighboring turbines and the entire array was necessarily reevaluated. The terrain is rocky and mountainous therefore slopes were evaluated as important element of access for construction and maintenance. To create a safe and stable road surface on steep slopes to each turbine location and transmission alignment, engineering was conducted to determine the required amount and extent of cut and fill material need. Cut, or excavation, creates space for the road driving surface. Fill is the use of the cut material on the roadway to create embankments for stability and erosion control. The objective is to balance the amount of material from cuts so it roughly matches the amount of fill to minimizing the amount of construction labor and costs, avoid costly hauling and disposal, and minimize surface disturbance and associated air quality effects from construction generated particulate matter and dust. The fill volume of excavation increases significantly as the depth of the cut increases, particularly on steep slopes; therefore, construction costs on steep slopes would be greatly and disproportionally increased. The 140 WTG Layout was abandoned by the Applicant because it was not technically or economically feasible and BLM subsequently eliminated it from detailed consideration.

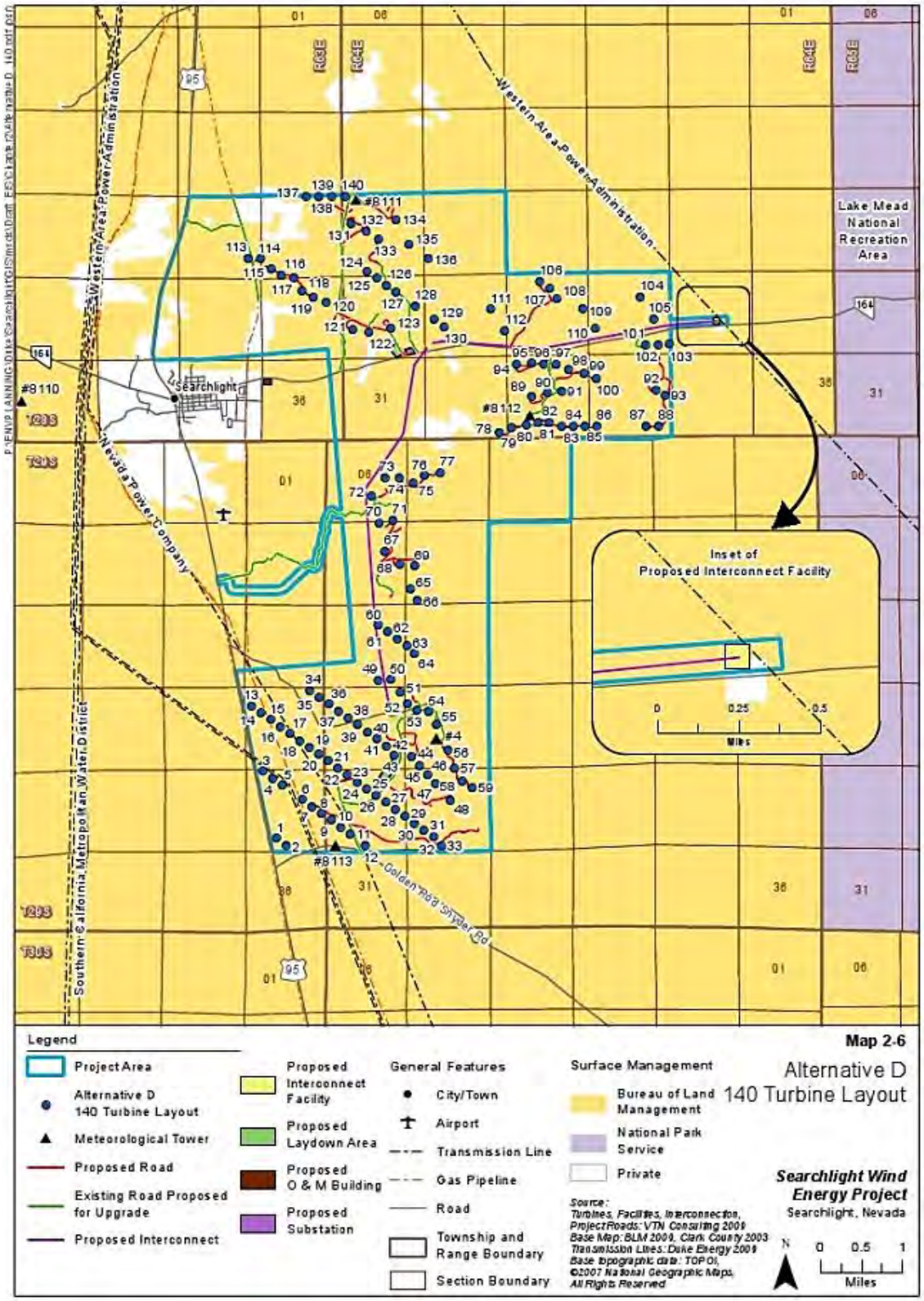

Figure 2.2-2. 140 WTG Layout Alternative

2.2.3 Western's Interconnection Switching Station Location Alternatives

Western's primary selection criteria was to site its proposed switchyard within close proximity to the Davis-Mead 230-kV transmission line and meet BLM resource planning requirements, including siting the switchyard outside the Area of Critical Environmental Concern (ACEC), except for ½-mile area adjacent to a federally-designated highway, per the BLM Resource Management Plan. In addition, Western's site must comply with Federal and utility regulation, which governs the power industry. Interconnections must have redundant and diversely routed communications for reliability; therefore, the switchyard location must have line-of-sight to one of Western's nearby mountaintop communication sites for the primary communication path. The second, redundant communication path is less restrictive but also guided by regulation. Other operational requirements also impact location, including all-weather access to the switchyard during storm events and access to distribution power lines to provide primary station service power.

Western identified three additional switching station locations outside the Piute-Eldorado Valley ACEC including:

1. A site located at the northeast corner of Section 27 near the existing Davis-Mead 230-kV transmission line
2. A site along Cottonwood Cove Road (SR 164), between the proposed WTG collection substation and the existing Davis-Mead transmission line, and near the proposed Searchlight generation tie line in Sections 27, 28, and 29
3. A site south of SR 164 in the southeast corner of Section 34

Each of these sites was evaluated based on the following criteria: available electrical service, access to existing communication facilities, road access, topography and cost. Site descriptions and rationale for elimination are provided below:

Site 1 (NE Corner Section 27)

This location was considered due to its close proximity to the existing Davis-Mead transmission line and a clear microwave path to one of Western's existing communication facilities. However, the access road from SR 164 (i.e. Cottonwood Cove Road) to this location crosses two major drainages and would require bridges, channelizing structures and large box culverts to maintain access to the site during storms events. The ground surface in the northeast corner of Section 27 is thin soil or exposed bedrock. Blasting would be required to level the switchyard, build the access road, and for most (possibly all) foundations which would easily double the cost of construction. A new power line would be necessary to connect the site with the existing NV Energy power line that is located along the north side of SR 164. The additional costs from wash crossing infrastructure and blasting make this site unreasonable from an engineering and cost perspective.

Site 2 (Sections 27, 28, and 29)

A location along the Searchlight generation tie (gen-tie) line was also considered. Being close to both the gen-tie line and the NV Energy distribution line is advantageous. However, development along the gen-tie line would require construction of a new access road from SR 164 over to the site, including box culverts, channelizing structures and/or a bridge for one major desert wash crossing. Depending on how far west along the gen-tie line the site was located, the existing Davis-Mead line would have to be re-routed up to 2-miles to the west requiring new double-circuit transmission line with an estimated cost of about $1.25 million/mile. There would also no clear microwave path to existing Western communication sites along the gen tie route, requiring development of a new mountain top communication site nearby, estimated to cost about $700,000. Site 2 was eliminated due to the unreasonable costs of the Davis-Mead line relocation and new communication site requirements. Further, it was anticipated that recreational

users would use the new road to bypass the NPS fee station resulting in unauthorized access to the park and additional disturbance relatively close to Lake Mead.

Site 3 (SE Corner Section 34)

This location was considered because it has a clear microwave path to Western's existing communication facilities. However, this site is also located approximately 2 miles away from the Davis-Mead transmission line and thus would require 2 miles of double-circuit transmission line to connect with Davis-Mead with an estimated cost of about $1.25 million/mile. Other site development constraints would require a new access road from SR 164 along the east boundary of the proposed site, including box culverts, channelizing structures and/or bridges for crossing several minor washes and one major wash. Finally, the location would require 3.5 miles of new Searchlight gen-tie line and 1.5 miles of new distribution line for station service power. Site 3 was eliminated due to unreasonable costs for an all-weather access road, a new distribution line for station service, and the double-circuit transmission line to connect with the Davis-Mead transmission line. In addition to the technical and economic reasons for elimination, it was anticipated that recreational users would use the new road to bypass the NPS fee station resulting in unauthorized access to the park and additional disturbance relatively close to Lake Mead. (similar to Site 2).

2.3 Proposed Project Features Common to Action Alternatives

Under both action alternatives, the proposed Searchlight Wind Energy Project would consist of the following temporary (during construction) and permanent features:

- Wind turbine generators (WTGs), including concrete foundations, tubular steel towers, nacelles (i.e., main WTG bodies), and rotor assembly
- Pad-mounted transformers (one located at the base of each WTG tower)
- Underground electrical collection system (34.5 kV)
- Underground communications system
- Two onsite electrical substations and 6.1-mile overhead transmission line connecting the substations
- A 2.6-mile overhead transmission line (230 kV) connecting to Western's proposed switching station
- Four meteorological masts
- Operations and maintenance building
- Two temporary laydown areas
- Temporary concrete batch plant
- Temporary portable rock crusher
- Access roads
- Western's proposed switching station and ancillary facilities

Proposed Project features, construction methods, and O&M and decommissioning elements are detailed below.

2.3.1 General Features of the Proposed Project

Wind Turbine Generators (WTG)

WTGs consist of three principal components that would be assembled and erected during construction: the tower, the nacelle, and the rotor assembly. For the purpose of analysis, both action alternatives would use the Siemens Model 2.3-101 MW WTG with a 331-foot rotor diameter on a 262-foot tower (WTG hub

height) (Figure 2.3-1). These modern WTGs would have maximum height of up to 427.5 feet with three mounted rotor blades, each 165 feet in length. Minimum blade height would be 96 feet. While the Applicant assumes that the Siemens 2.3-MW WTG model would be erected at the site, there remains the possibility that another similar WTG could be used. No WTG under consideration for the Proposed Project would exceed the maximum height of the Siemens 2.3-MW WTG (427.5 feet).

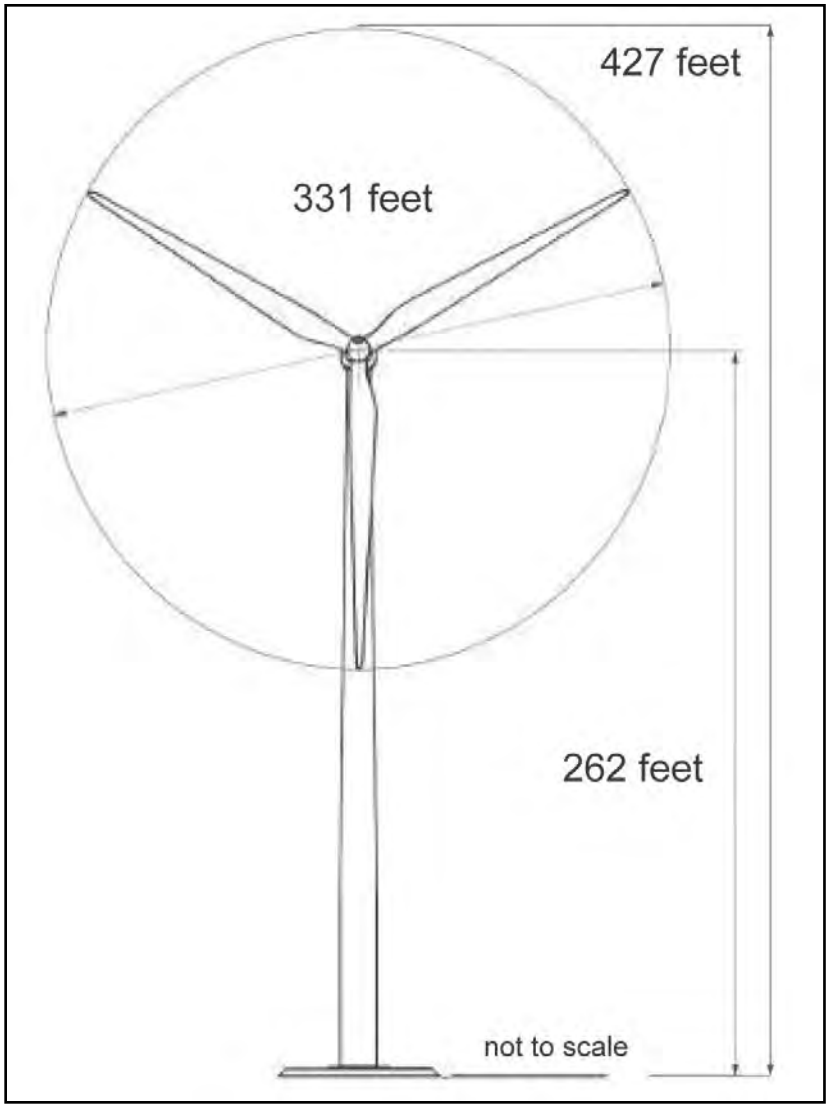

Figure 2.3-1. Diagram of a Siemens 2.3-101 WTG

Towers

The tower would be a freestanding tubular, painted steel structure manufactured in multiple sections, depending on the required height. Towers would be delivered to the site and erected in two or three sections each. Each section would be bolted together via an internal flange. An access door would be located at the base of each tower. An internal ladder would run to the top of the tower just below the nacelle. The tower would be equipped with interior lighting.

Nacelle

The gearbox, generator, and various control equipment would be enclosed within the nacelle, which is the housing of the unit that protects the WTG mechanics from environmental exposure. A yaw system would be mounted between the nacelle and the top of the tower on which the nacelle would reside. The yaw system consists of a bearing surface for directional rotation of the WTG, and a drive system consisting of a drive motor(s) to keep the WTG pointed into the wind to maximize energy capture. A wind vane and anemometer would be mounted at the rear of the nacelle to signal the controller with wind speed and direction information.

Rotor Assembly

The WTGs would be powered by three composite or fiberglass blades connected to a central rotor hub. Wind would create lift on the blades, thus causing the rotor hub to spin. This rotation would be transferred to a gearbox where the speed of rotation is increased to the speed required for the attached electric generator housed in the nacelle. The rotor blades would turn slowly, typically less than 20 revolutions per minute. Although the blades would be nonmetallic, typically made from a glass-reinforced polyester composite, they would be equipped with a sophisticated lightning suppression system.

Roads

All roads would be constructed for the specific purpose of the Proposed Project and be used as primary access routes for the larger WTG components delivered to the project area, as well as for construction and O&M crews and smaller materials delivery. They would be located to minimize ground disturbance, avoid sensitive resources (e.g., biological habitat, cultural resource sites), and maximize transportation efficiency.

Regional and local access to the area would be via US-95 and Cottonwood Cove Road (also known as SR 164 west of Searchlight) (Figure 1.3-2). Access to the Proposed Project facilities would be provided by newly constructed extensions of existing north and south access roads, and upgraded or partially realigned (to reduce maximum grade to 10% or less, or to increase the inside radius of turns on the road) existing access roads that begin at US-95 and Cottonwood Cove Road. New roads would link the individual WTGs, substations, and other project facilities.

From the north end of Fourth of July Mountains, the existing road from Cottonwood Cove Road would be upgraded to a gravel road and would be the primary access route for larger WTG components. New gravel WTG string roads would be constructed to link the WTGs. The WTG string roads would be designed to enable the transport of large cranes between each individual WTG site. New short spur roads would be constructed along the WTG strings to access each individual WTG.

Each WTG manufacturer has slightly different equipment transport and crane requirements. These requirements dictate road width and road turn radius. Turning radius refers to the amount of roadway space a truck needs to make a u-turn while road width refers to the extent of the road from side to side. A 148’ minimum inside radius was used in design guidelines for all access roads. The road widths for the Proposed Project would range between 16’ and 36’, which is sufficient to meet the inside turning radius requirements. A diagram of a typical interstate semitrailer is provided in Figure 2.3-2. Turning Radius Example (Source: http://www.automation-drive.com/truck-turning)

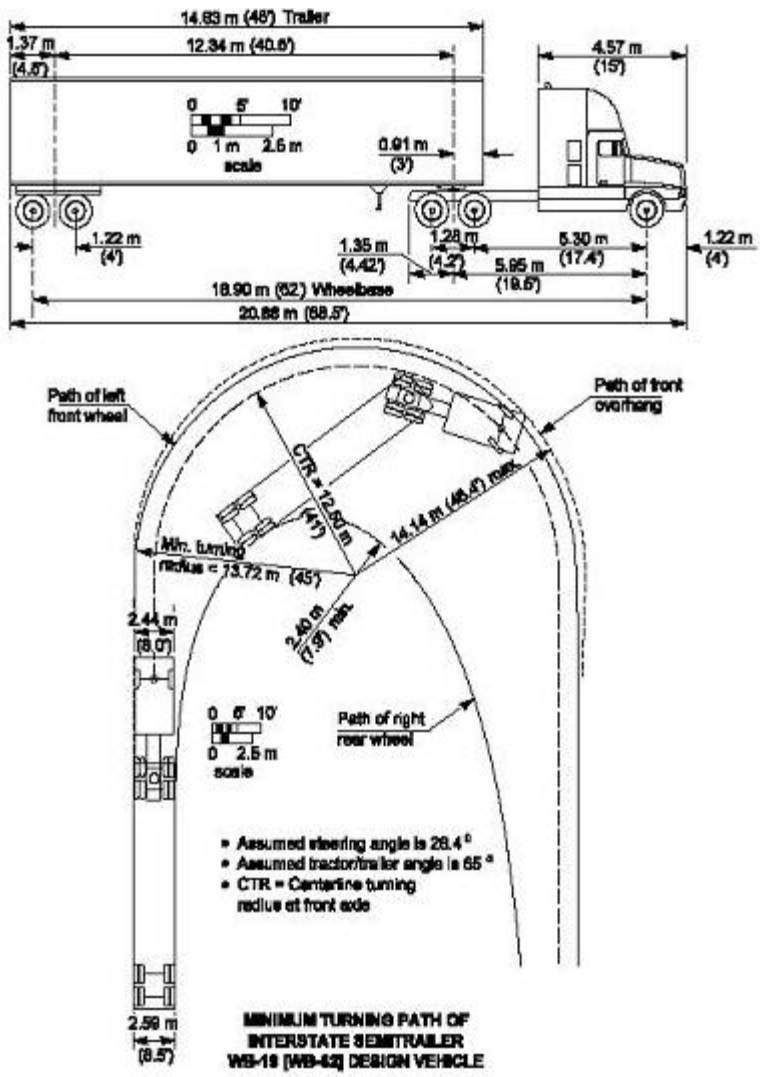

Figure 2.3-2. Turning Radius Example

The turnout general requirements were provided from the turbine manufacturer, Siemens, General Site Requirements. Their specification is to have a turnout every 1640' for the 16' wide roads. Most of the proposed roads are 36' wide, so in essence there is a 16' turnout included in the width of the proposed road. Calculations of ground disturbance considered turnouts.

The type and brand of WTGs installed would be determined by commercial factors within the timeframe of the Proposed Project schedule. To allow safe passage of the large transport equipment used in construction, gravel roads would be built consisting of an aggregate road base over compacted native material in accordance with geotechnical recommendations, and with adequate drainage and compaction to handle 15-ton-per-axle loads. Road widths would range between 16 and 36 feet. The BLM would require that all roads be designed, built, surfaced, and maintained to minimize ground disturbance, and to provide safe operating conditions at all times (e.g., speed limits of 15 miles per hour would be posted on all project roads).

2.3.1.1 Electrical System

Each WTG would generate electricity at approximately 690 volts. The low voltage from each WTG would be increased to the 34.5-kV level required for the medium-voltage collector system via a pad-

mounted transformer located at each WTG. The power collection system would consist of medium-voltage, high-density, insulated underground cables that connect each WTG transformer to one of two onsite substations. These underground cables would be buried in trenches located adjacent to the roadbed of the WTG connector roads, wherever technically feasible. At the substations, voltage would be further increased to 230 kV. The two onsite substations would be connected with a 6.1-mile, 230-kV overhead transmission line. The stepped-up power would then be delivered from the northern substation through the 2.6-mile transmission interconnect line to the Western's proposed switching station, which would provide an interconnection with Western's Davis-Mead 230-kV transmission line.

Underground Communications System

The WTGs would be operated via a Supervisory Control and Data Acquisition (SCADA) system mounted on the control panel inside the tower of each WTG. Each WTG would be connected via fiber-optic cable to a central computer in the O&M building. Data could be accessed and the WTGs could be controlled, either on site or remotely. The fiber-optic communications cable would be co-located with the electrical collection system to reduce environmental impacts. Where feasible, collection cabling and communication lines would be co-located with roads to minimize environmental impacts.

Substations

Two project substations are proposed: one in the northeastern portion of the project area (adjacent to Cottonwood Cove Road) and one in the southern portion of the project site (south of Tip Top Well Road). The proposed substations' main functions would be to step-up the voltage from the collection lines (34.5 kV) to the transmission line level (230 kV) and to provide electrical fault protection. Based on the transmission system studies conducted by Western, the Applicant would install capacitor banks at each of the two project 230-kV substations. The basic elements of the step-up substation facilities would be a control house, one or two main transformers, outdoor breakers, capacitor banks, relaying equipment, high-voltage bus work, steel support structures, an underground grounding grid, and overhead lightning suppression conductors. All of the main outdoor electrical equipment and control house would be installed on a concrete foundation.

The specific footprint of the substations would depend largely on the utility requirements, number of WTGs used, and resulting nameplate capacity (the amount of energy the generator is capable of producing), which would affect the number of 34.5-kV feeder breakers. Each substation site would consist of a graveled footprint area of approximately 1.5 acres, a 12-foot-tall chain-link perimeter fence, and an outdoor lighting system.

Transmission Lines

Overhead 230-kV transmission lines are proposed for the 6.1-mile transmission line, which would connect the two project substations, and the 2.6-mile transmission line to Western's proposed switching station to connect with the Davis-Mead 230-kV transmission line. The Applicant proposes to support the transmission line conductors from steel monopole structures (Figure 2.3-3). Each monopole structure would be approximately 80 to 100 feet tall and be spaced at approximately 500-foot intervals. The 230-kV transmission line conductors would maintain the required National Electrical Safety Code (NESC) clearances of 22.5 feet for 230 kV over terrain subject to vehicular traffic, plus an additional safety buffer (typically 5 feet). The conductor would be attached to the structures at varying heights to maintain the required NESC wire-to-ground clearances between structures. The design for the 2.6-mile transmission line to Western's proposed switching station would be subject to Western's review and may be modified to meet Western's requirements during the design phase for the Proposed Project. In addition, Western would require the installation of an overhead optical groundwire containing fiber optics to provide communication between Western's proposed switching station and the Applicant's system.

Figure 2.3-3. Proposed Steel Monopole Structure

In some situations an underbuilt circuit (34.5-kV collection line hung on the steel monopole underneath the 230-kV transmission line) would be used. For the most part, the collection system would be buried conductor tying several of the WTGs together in a circuit to collect the power generated at the WTGs and routing that power to the project substation, where it would be stepped up to the 230-kV transmission voltage. At several locations along the transmission lines, it might be advantageous to install the collection system conductor above ground due to elevation changes, limited easement, cost of installation, minimization of environmental impact, and geotechnical conditions that will not allow it to be buried. An underbuilt circuit on the 2.6-mile transmission line to Western's proposed switching station would be subject to Western's review.

Meteorological Towers

Four anemometer (wind measurement) towers have been installed at strategic locations along the WTG strings. These meteorological towers are approximately 180 to 200 feet in height and have anemometers mounted at varying distances above the ground. Information collected from the anemometers would be relayed to the O&M building via the Proposed Project's communication system. The meteorological towers have been constructed of tubular steel structures and are designed to discourage perching for raptors and other large birds.

Operations and Maintenance Facility

The O&M facility would be located east of Searchlight and along the south side of Cottonwood Cove Road. It would include a main building with offices, spare parts storage, restrooms, a septic system, a

shop area, outdoor parking facilities, a turnaround area for larger vehicles, outdoor lighting, and a gated access with partial or full-perimeter fencing. Power for the O&M facility would come from the local electric grid. The O&M building would have a foundation footprint of approximately 60 feet by 140 feet. The projected permanent footprint of the O&M facility (including parking area) would be approximately 5 acres. The building would be of composite materials constructed or painted to match the surrounding landscape color. Potable water supplies would be used in the building, and sewage disposal would be by means of an onsite septic tank. Telecommunication lines and the SCADA system would also be installed.

2.3.2 Construction

The Proposed Project would employ standard construction procedures used for other wind power projects in the western United States. These procedures, with minor modification to allow for site-specific circumstances and differences among WTG manufacturers, are summarized below. Additionally, project construction and operations would follow the BLM's BMPs. Project construction is anticipated to take approximately 8 to 12 months.

Laydown Areas

Two laydown areas would be required near the proposed electrical substation locations (Figure 2.1-1 and Figure 2.1-2).Figure 2.3-4 delineates a typical laydown area. Access to the laydown areas would be via existing but upgraded roads leading from US-95 north of Searchlight and Cottonwood Cove Road east of Searchlight. The southern laydown area would be temporary and used during construction only. However, the laydown area near the north substation might be permanent and could be used for extra storage and spare parts during the life of the project. Each laydown area would be approximately 10 acres and might be fenced for security for the duration of its use.

During construction, items such as construction equipment, cable, foundation parts, components, towers, blades, and nacelles might be temporarily stored either at one of the laydown areas, or in temporary laydown areas at the base of each WTG location. All equipment and components would be supported on wooden frames, pallets, or straw bales, which would be placed on the ground while WTG components are loaded, pre-assembled, or awaiting installation. A mobile concrete batch plant and rock crusher would be located within one laydown area and relocated to the other as necessary during construction.

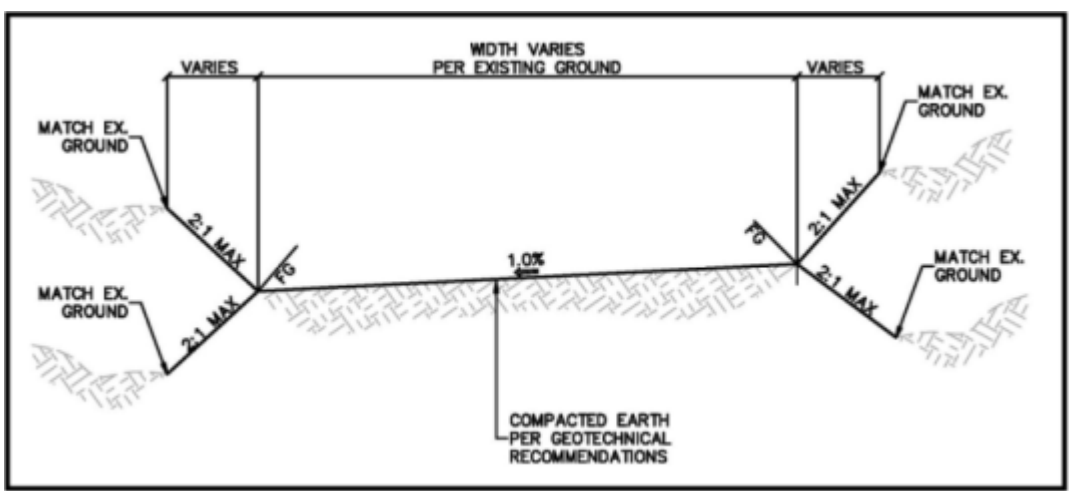

Figure 2.3-4. A Typical Laydown Area

Road Construction

To obtain preliminary roadway footprints, profiles and sections were developed for the Proposed Project roads. From these preliminary profiles and sections, estimates of cut-and-fill required to construct the roads were calculated using AutoCad Civil 3-D 2010. Two-foot-elevation contour interval data were used

to develop a digital terrain model to represent the existing ground surface in AutoCad Civil 3-D 2010. A horizontal alignment was created and overlaid on the digital terrain model. This alignment meets the requirements for the type and size of trucks that would be delivering and constructing the proposed project.

The typical cut-and-fill volumes for the Proposed Project roadways were based on typical assumptions and approximate locations of the project features. These numbers are for analysis purposes only. Final locations of the roads and associated cut-and-fill volumes would be based on topography and sound engineering principles. Should shallow bedrock be encountered, blasting may be necessary. Figure 2.3-5 and Figure 2.3-6 illustrate typical cross-sections of the proposed access roads and WTG string roads.

The maximum and minimum full-surfaced widths for project access and WTG string roads would be 36 feet and 16 feet, respectively. The roadways connecting WTG sites would be 16 feet wide with 10-foot shoulders. Cut-and-fill slopes would be at a ratio of 2 horizontal to 1 vertical (H:V). Equipment clearance would require a minimum inside radius of 148 feet at all turns, and would be graded to within no more than 6 inches of rise or drop in any 50-foot length. Turnouts might be needed to allow for safe passing of construction vehicles and would be 16 feet wide and 210 feet long.

No material quarries would be located on BLM or other federal lands. Any needed fill or road base material in excess of that generated from road cut activities would be obtained from a licensed offsite private source. Topsoil removed during road construction would be stockpiled at project laydown areas. The stockpiled topsoil would be spread on cut-and-fill slopes, and then revegetated after road construction.

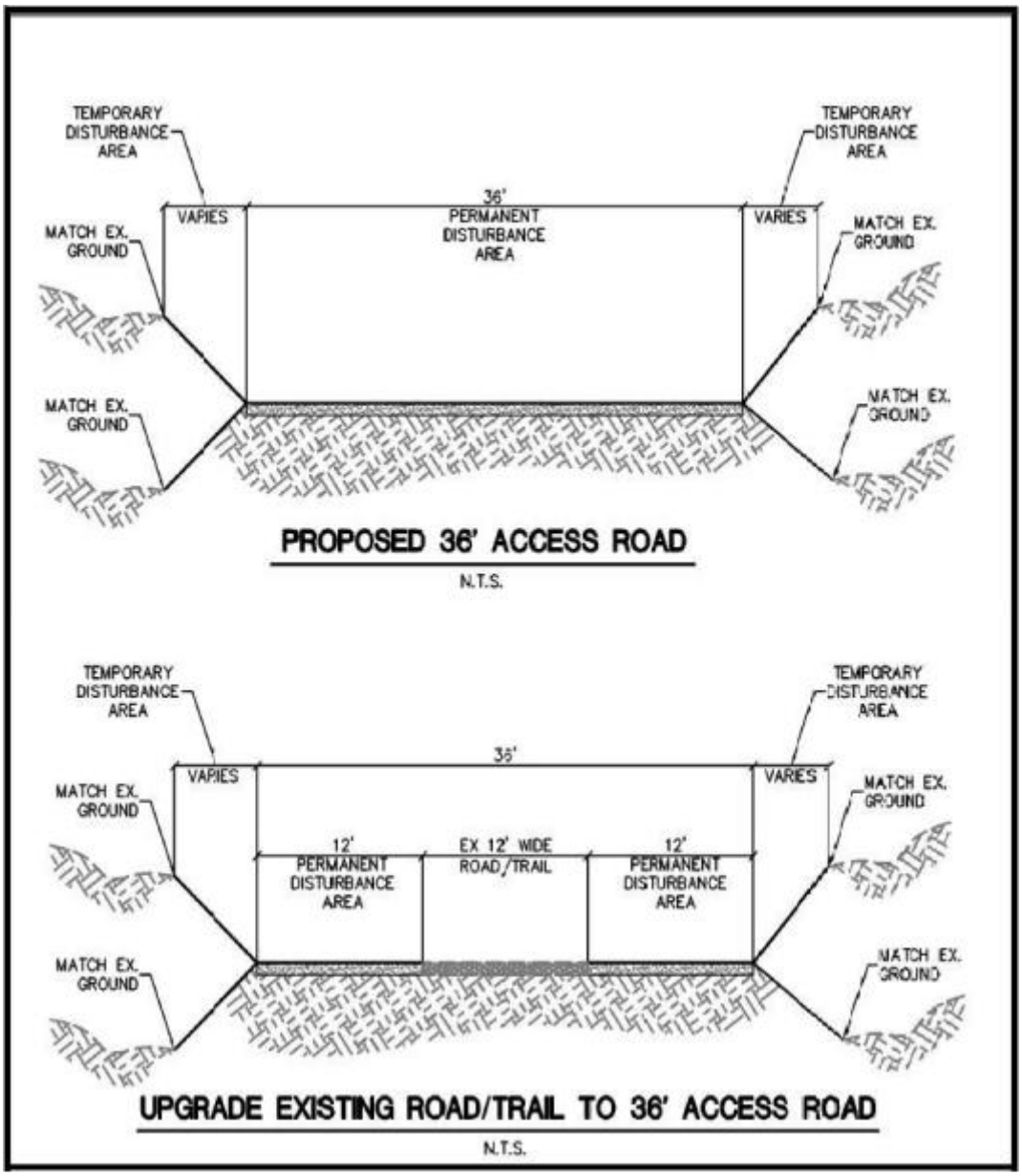

Figure 2.3-5. Typical Cross-Section for Project's 36-Foot-Wide Access Roads and WTG Entry Roads

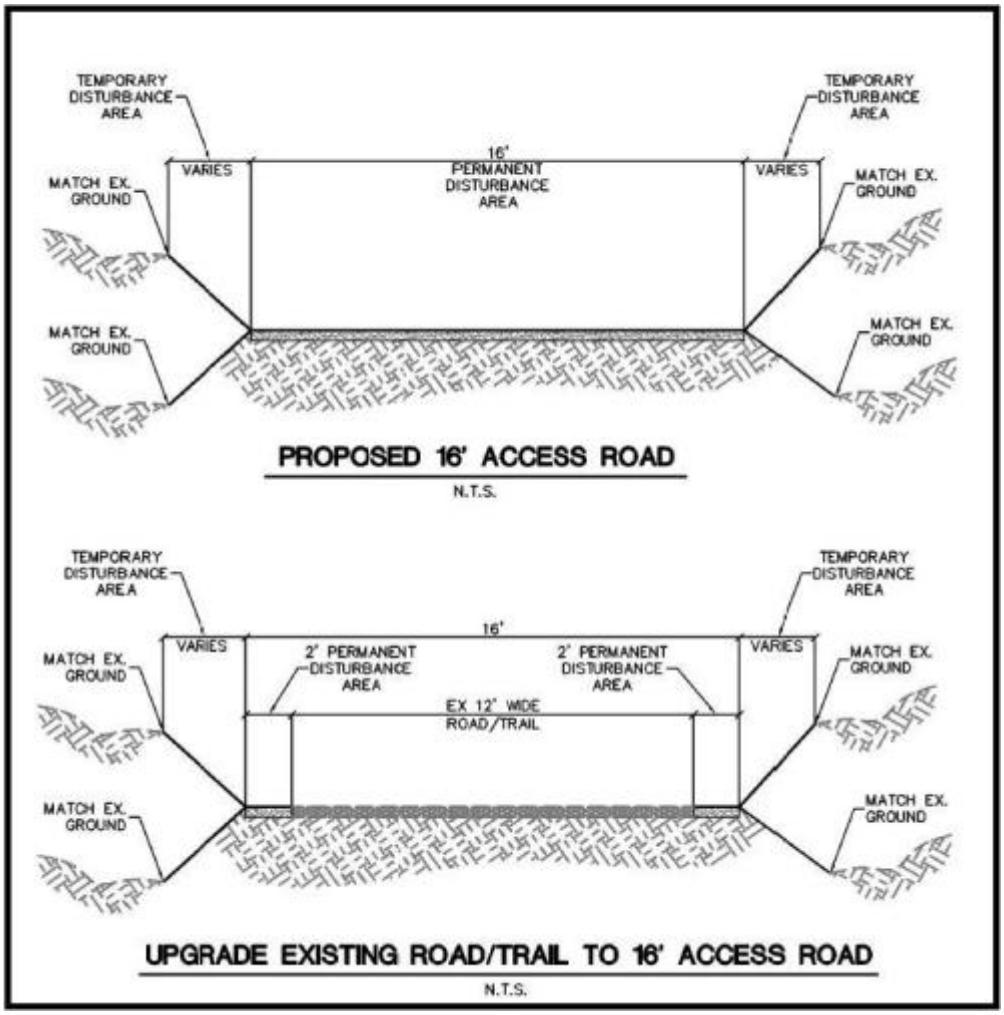

Figure 2.3-6. Typical Cross-Sections for Project's 16-Foot-Wide Access Roads

Construction traffic would be restricted to the roads developed for the project. Use of existing, unimproved roads would be for emergency situations only. Along all roads, flaggers with two-way radios would control construction traffic and thus reduce the potential for accidents. A speed limit of 15 mph would be set commensurate with road type, traffic volume, vehicle type, and site-specific conditions, as necessary, to ensure safe and efficient traffic flow.

To avoid unnecessary impacts on vegetation, construction equipment would be limited to construction corridors and to designated staging/equipment laydown area footprints. Where possible, any BLM-sensitive plant species would be transplanted from road ROWs and WTG pad sites to areas outside of the project impact area, as approved by BLM.

To help limit the spread and establishment of an invasive plant species community within disturbed areas, prompt establishment of the desired vegetation would be required. Seeding and transplanting would occur as soon as possible during the optimal period after construction using certified “weed-free” seed and native species to the extent possible, in a mix prescribed by BLM (Appendix B, Biological Resources).

WTG Pads and Foundations

At each WTG pad, an assembly area would be required for offloading, storage, and assembly of up to three tower sections, nacelle, rotor hub, and blades (Figure 2.3-7). In level or near-level terrain, this

laydown area would not need to be graded or cleared of vegetation. Construction access to this area would be limited to wheeled vehicles. Some vegetation crushing and soil compaction would be expected. Within this laydown area, an approximate 60-foot by 60-foot area would be cleared of vegetation and graded to facilitate construction of the WTG foundation.

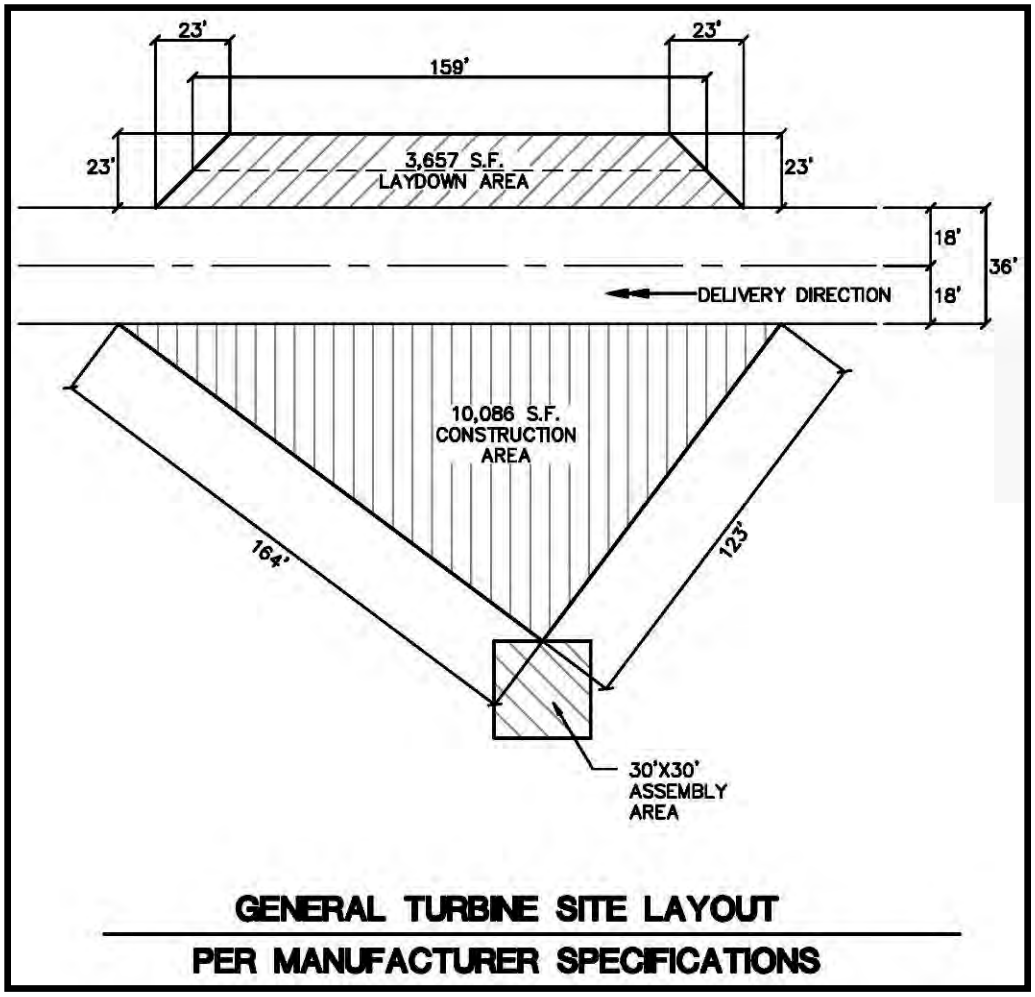

Figure 2.3-7. Typical WTG Pad Laydown and Construction Area

To allow a large, track-mounted crane to access the WTG foundations, a crane pad would be constructed adjacent to the WTG access road using standard cut-and-fill compacted road construction procedures. To allow the crane to safely lift the large and extremely heavy WTG components, the crane pad must be nearly flat.

WTG foundation designs would be based on the load requirements of the selected WTG and the load-bearing characteristics of the soil. Prior to construction, geotechnical investigations would be conducted to determine the soil characteristics at each WTG location. These geotechnical data would assist the project proponent in the selection of the appropriate WTG foundation type.

Figure 2.3-8. Typical WTG Spread Foundation During Construction

A typical foundation for a 2.3-MW WTG would be a reinforced concrete spread foundation resting directly on soil approximately 10 feet below ground. The foundation generally would be an octagon shape from 40 to 60 feet wide with a concrete pier on the top of the mat extending to ground level. Each foundation would require approximately 300 cubic yards of concrete. Figure 2.3-8 shows a typical WTG foundation during construction. Figure 2.3-9 and Figure 2.3-10 show the dimensions of a typical foundation.

In the northern area of the Proposed Project site, bedrock might be present within a few inches to 2 feet of the ground surface at some WTG locations. In these instances, a “rock anchor”- type foundation could be required. In the rock anchor design, the rock would be removed to a depth of approximately 5 feet and a diameter of approximately 24 feet by mechanical removal methods and possibly engineered blasting. After removal of the rock material, a series of 20 to 24 rock borings, 6 inches in diameter, would be made along the 20-foot diameter of the excavation area. These borings would be installed to a depth of 33.5 feet. Then a 40-foot-long by 2.5- to 3-inch-diameter anchor bolt would be installed in each of the borings, which are supported vertically, and grout would be installed in the anchor bolt boring to secure the anchor bolts.

After the anchor bolts are grouted in the borings, the 5-foot-long anchor bolt sleeves on the top of the anchor bolts, the rebar, conduit, the WTG bolt cage, and other embedments would be installed. At the end of this work, the 5-foot-thick concrete cap would be installed.

After the concrete cap cures, the anchor bolt base plate and nuts would be installed to hold the concrete cap securely to the anchor bolts. After this is complete, the WTG base tower section could be installed on the WTG bolts embedded in the rock anchor foundation.

In the southern portion of the project site, the Applicant plans to use the tensionless tube foundation design. With this foundation design, either by mechanical or explosive means, a 20-foot-diameter by 30-foot-deep excavation would be made, then two concentric corrugated metal pipes, 12 feet and 16 feet in diameter, would be installed in the excavation. The inside of the smaller pipe and the outside of the larger pipe would then be backfilled with the excavation materials. The WTG bolt cage consisting of 144 1.5-inch-diameter by 33-feet-long bolts would be placed in the annulus of the two corrugated metal pipes as well as any conduit and other embedments. After securing and aligning the bolts to accept the WTG base tower section and placing rebar for the cap, the annulus would be filled with concrete and the 1-foot-thick concrete cap placed.

If the soils of the southern portion of the project site are not conducive to a tensionless tube foundation, the spread foundation design would be used in this area.

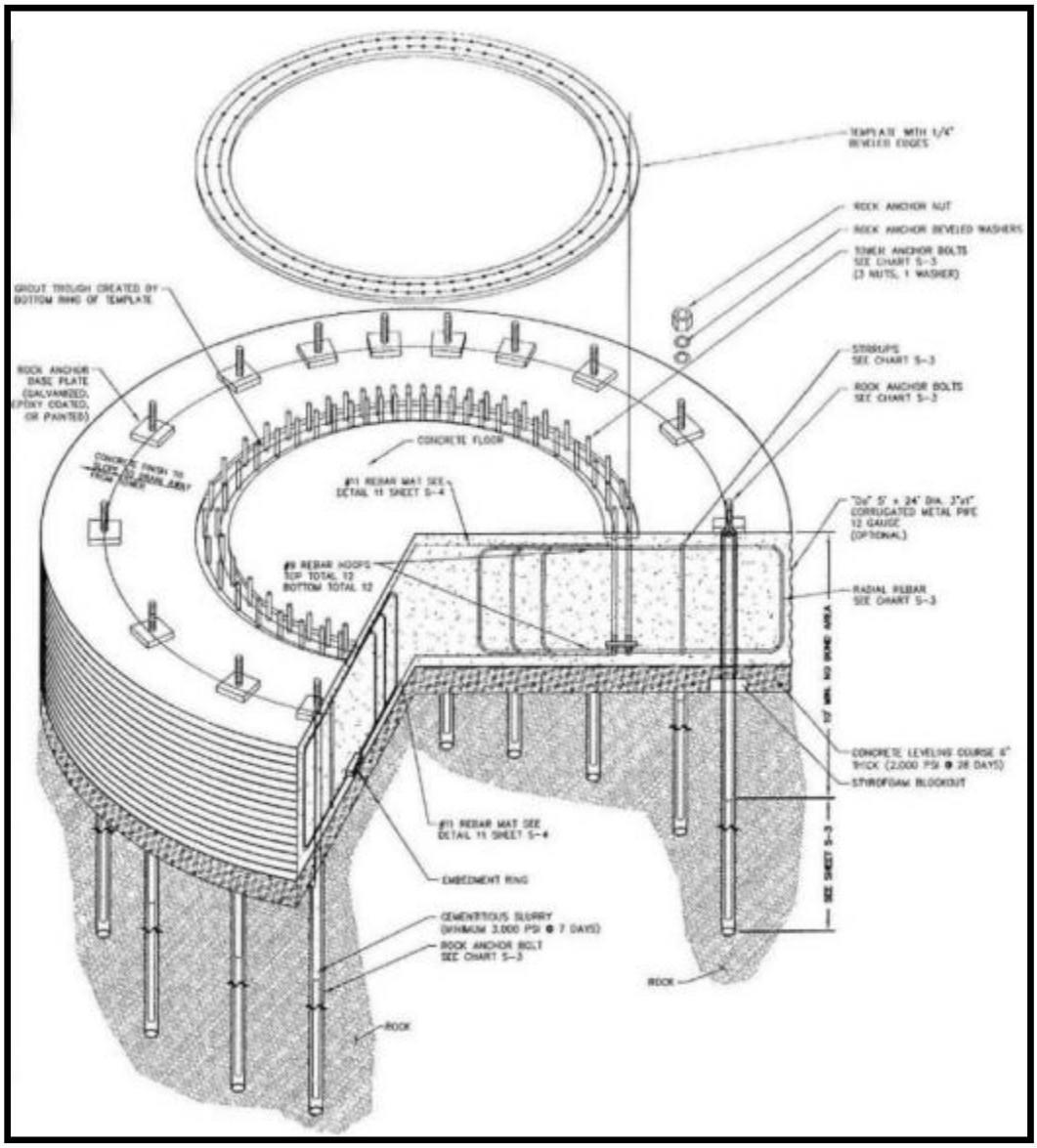

Figure 2.3-9. Typical WTG Rock Anchor Foundation

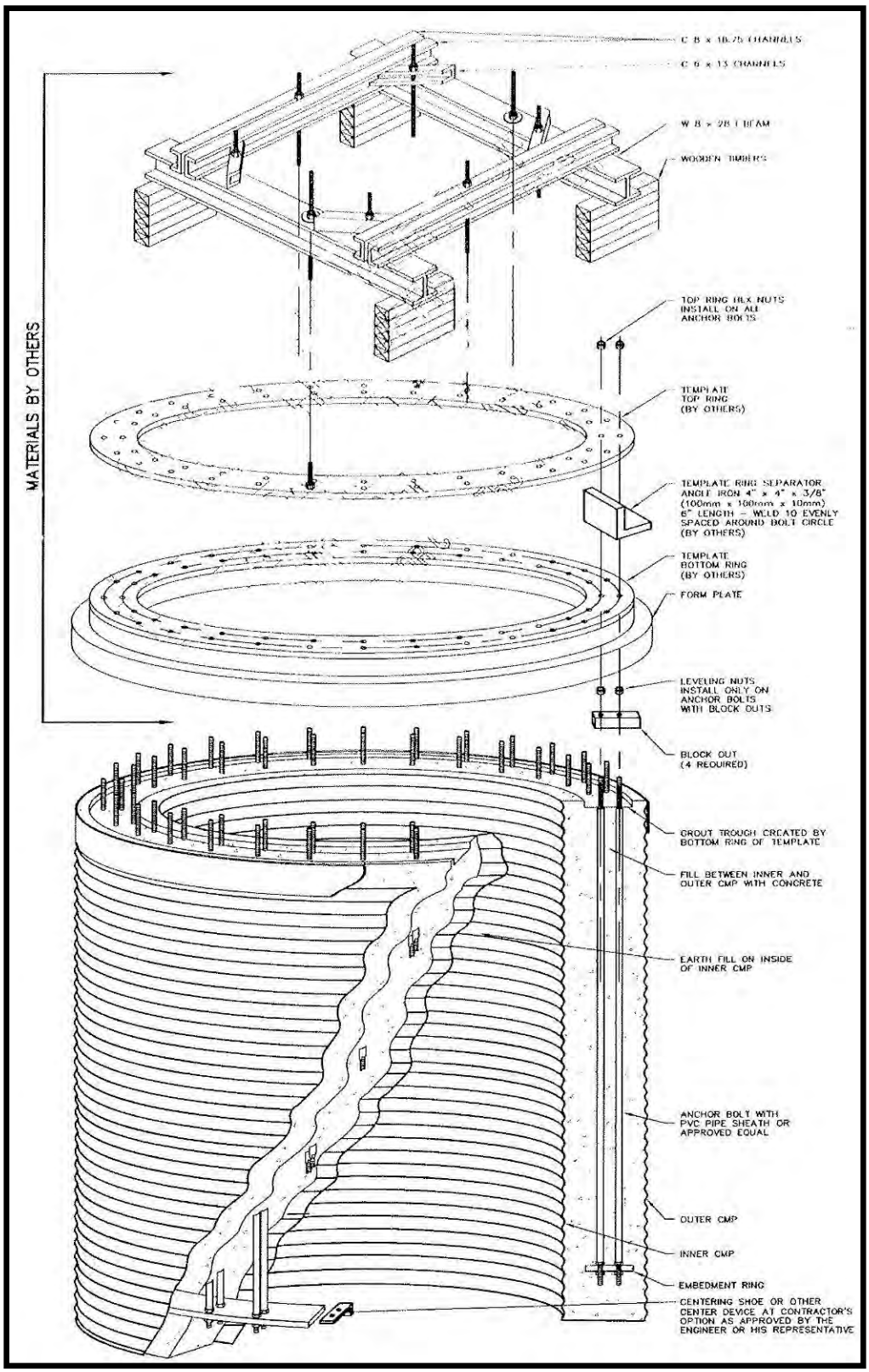

Figure 2.3-10. Typical WTG Tensionless Tub Foundation

To adequately ground the WTGSs and prevent damage from electrical storms, 3-inch-diameter, 30-foot-deep holes might be required for placement of WTG grounding rods as needed. These holes would be located adjacent to the WTG foundations within the 60-foot diameter area to be cleared for foundation construction. Following placement of the grounding rods, the holes would be backfilled and capped with concrete.

WTG Tower Erection

WTG tower erection would require the use of one large, track-mounted crane and two small-wheeled cranes. Two smaller-wheeled cranes would be used to offload WTG components from trucks, and to assist in the precise alignment of tower sections. The smaller crane would be used first to raise and install the two bottom tower sections, and then to lower these sections over the threaded foundation bolts. The large crane would then raise the upper mid- and upper-tower sections to be bolted through the attached flanges to the lower tower section, and to raise the nacelle, rotor hub, and blades to be installed atop the towers.

Underground Communication and Electrical Cables

Trenching equipment would be used to excavate trenches within or near the access road bed to bury the insulated underground cables that would connect each WTG transformer to one of the two project substations. Trenches for the large conductor cable would be backfilled with engineered trench material to protect the cables from damage or possible contact. Fiber optic communication links would be placed in the same trenches as the conductor cables. The depth, number of trenches, and backfill requirements would be determined by the size of the cable required and the thermal conductivity of the soil or rock surrounding the trench.

Transmission Line Construction

Overhead 230-kV transmission lines construction would use standard industry procedures, including surveying, ROW preparation, materials hauling, structure assembly and erection, ground wire, conductor stringing, cleanup, and restoration. All transmission lines and structures would be designed to prevent birds from perching on them. Construction procedures described below would be the same for the proposed 6.1-mile transmission line between the onsite substations and the 2.6-mile transmission line connecting to Western's proposed switching station.

Overhead 230-kV transmission interconnection lines would be constructed on monopole structures. The monopole structures typically would be set in augered holes approximately 3.6 feet in diameter and about 10 feet deep; if consolidated rock is encountered, then structure holes would be advanced using mechanical removal methods and possibly engineered blasting. All blasting would be conducted by a permitted contractor, and would be in compliance with state and federal regulations. Structures would be assembled on the project site. Structure erection and conductor stringing would occur sequentially along the ROW.

Existing public would be used to transport materials and equipment from laydown areas to ingress points along the proposed transmission line ROW using the shortest distance possible. The ROW would be used to access transmission line construction sites. The transmission lines would require the installation of temporary access routes. The access routes would be 12 feet wide and cleared of large boulders to allow high-clearance, four-wheel-drive vehicles to pass. The routes would be installed to allow access to support the construction of the transmission lines. Clearing of vegetation and minor grading might be necessary at some of the transmission line structures to facilitate their construction. When construction is complete, some access routes would be used approximately twice a year for inspection and maintenance. Native vegetation would be allowed to re-establish over the routes to the extent that four-wheel-drive vehicle travel remains practical. Barriers would be placed where the ROW intersects roads to prevent unauthorized traffic onto the transmission line ROW.

Temporary Concrete Batch Plant

The Proposed Project would require more than 40,000 cubic yards of concrete for construction of the wind tower foundations, substations, and O&M facility. Depending upon weather conditions, concrete typically needs to be poured within 90 minutes of its mixing with water. Delivery time to pour locations would likely exceed 90 minutes from existing concrete suppliers in the vicinity of the Proposed Project area. Therefore, a temporary, mobile concrete batch plant would be located within the laydown areas to facilitate the sub-90 minute delivery time needed. If concrete were to be mixed at the mobile batch plant, as opposed to existing concrete suppliers, then cement, water, and aggregate also would be staged in the laydown areas.

The batch plant would operate during project construction hours for approximately 4 to 5 months of the anticipated 8-month construction period. To construct the mobile batch plant, vegetation would be cleared and the ground leveled. For the containment of process water, a 1-foot-high earth berm or other appropriate erosion control devices, such as silt fences and straw bales, would be installed around the area. Diversion ditches would be installed as necessary to prevent stormwater from surrounding areas running onto the site.

The batch plant would require a stand-alone, diesel-powered 250-kW generator. The generator would draw diesel fuel from an approximately 500-gallon aboveground storage tank, with secondary storage for spill prevention. It is estimated that the batch plant would consume 2,000 to 4,000 gallons of water per day. An onsite 4,000-gallon water tank would be replenished as needed. The Nevada Division of Environmental Protection (NDEP) would permit the batch plant operation.

Stockpiles of sand and aggregate would be located at the batch plant in a manner that would minimize exposure to wind. Cement would be discharged via screw conveyor directly from an elevated storage silo without outdoor storage. Construction managers and crew would use BMPs to keep the plant, storage, and stockpiles clean, and to minimize the buildup of fine materials. Cement trucks would be cleaned and washed at the batch plant. Cement residue would be washed from the cement delivery trucks into an aboveground lined and bermed settling pond. Cement residue would be collected from the settling pond and trucked off site for disposal, as needed.

The pond perimeter would be fenced to discourage wildlife from entering. Additionally, pond would be equipped with textured ramps to provide wildlife with an exit route should wildlife enter. If required, the contractor would obtain an Industrial Artificial Pond Permit from Nevada Department of Wildlife (NDOW) and adhere to all mitigation specified in the permit conditions.

Following completion of construction activities requiring cement, the batch plant would be demobilized, and the batch plant area would be restored. The area would be recontoured, stockpiled topsoil would be replaced, and the area would be reseeded with a certified-weed free BLM approved mixture of native grasses, forbs, and shrubs species and/or salvaged cactus and yucca.

Portable Rock Crusher

To construct the Proposed Project's roads, a rock crusher would be required to provide appropriately sized aggregate for fill and road base. The rock crusher would have an average capacity that could be more than 30,000 tons per day. The crusher would be located within the laydown areas and operated during project construction hours for approximately 4 to 5 months of the anticipated 8-month construction period. In accordance with BMPs, a water truck to suppress dust would spray the rock crushing area. Additionally, the crusher would contain several dust-suppression features, including built-in dust control measures on the crusher, screens, and water sprayers, which would be operated at all emission points during crusher operation, including startup and shutdown periods, as required by the Clark County Department of Air Quality and Environmental Management (CCDAQEM).

Water Use

During construction, water would be needed for dust control, making concrete, and equipment washing. All needed water would be transported from an offsite municipal or private source. No wells would be drilled or springs developed for the Proposed Project.

Traffic

Construction of the Proposed Projects roads, facilities, transmission lines, and electrical/communication lines would occur at approximately the same time, using individual vehicles for multiple tasks. During the construction period, there would be approximately 60 daily round trips by vehicles transporting construction personnel and small equipment to the site. Over the entire construction period, there would be a maximum of 625 trips of large trucks delivering the WTG components and related equipment to the project site. In addition, there would be more than 9,025 truck trips by dump trucks, concrete trucks, water trucks, cranes, and other construction and trade vehicles (Table 2.3-1). When constructed, O&M of the Proposed Project would require three round trips per day using pickups or other light-duty trucks.

Table 2.3-1. Estimated Vehicle Trips for Consturction[1]

WTG Component Types	Number of Components Required per WTG	Number of Components per Truck Load	Number of Truck Loads per WTG	Proposed Action 96 WTG	87 WTG Alternative
Tower sections	3.0	1.0	3.0		
Blades	3.0	2.0	1.5		
Nacelle	1.0	1.0	1.0		
Rotor hub	1.0	2.0	1.0		
Control cabin	1.0	1.0	1.0		
Truck trips to deliver WTG above-ground components			7.5	720	653
Truck trips to build project (WTG foundations, substations, O&M facility, transmission, and appurtenances)				6,541	5,952
Water delivery (for dust control and concrete mixing)				2,670	2,420
Estimated Vehicle Trips for Construction				**9,931**	**9,025**

[1] Applicant's estimates included contingency of 10%. Supplemental contingency of about 3-4% added to provide conservative estimate for analyses.

A traffic management plan would be prepared for project construction to minimize hazards from the increased truck traffic and to minimize impacts on traffic flow on local roads and highways. This plan would incorporate measures, such as informational signs, traffic flaggers when equipment might result in blocked throughways, traffic cones, and flashing lights, to identify any necessary changes in temporary road configuration. During construction, refueling and maintaining vehicles that are authorized for highway travel would be performed off site at an appropriate facility. On the project site, a maintenance crew using a specially designed vehicle maintenance truck would service construction vehicles that are not highway-authorized.

Post-Construction Clean Up

Final cleanup and restoration of the Proposed Project area would occur immediately following construction. Waste materials would be removed from the area and recycled or disposed of at appropriate facilities. All construction-related waste would be properly handled in accordance with county, state, and federal regulations and permit requirements. This waste might include vegetation, trash and litter, garbage, other solid waste, petroleum products, and other potentially hazardous materials. Excess material, such as soil and rocks activated during the construction of the project, would be stockpiled at a location on site and made available as a saleable material.

Construction Work Force

A peak of approximately 250 to 300 workers per day would be required for construction of the Proposed Project. The beginning and end of the construction period would involve a slightly lower number of workers than required during the middle months. Construction of the Proposed Project would be completed over an approximate 8- to 12-month period.

The Applicant would contract with a county- or state-approved local sanitation company to provide and maintain appropriate sanitation facilities. During construction, the sanitation facilities would be located at the batch plant, the substations, and the O&M facility, and, when necessary, additional facilities would be placed at specific construction locations.

2.3.3 Public Access and Safety

At project access roads from US-95 and Cottonwood Cove Road, the Applicant and Western would be responsible for posting safety and warning signs informing the public of construction activities and recommending that the public stay off the site. Similar signage would be posted throughout active project work areas. During the Proposed Project construction period, off-highway vehicle (OHV) use is likely to remain unchanged from current activity levels. Because the entire area is public land with open access, the project would be designed to coexist with current and anticipated future land uses.

Temporary fencing and warning signs would be erected, as needed, in areas where public safety risks could exist and where site personnel would not be available to control public access (such as at excavated foundation holes and electrical collection system trenches). Permanent fencing would be installed around the proposed permanent laydown area, the O&M building site, and the two project electrical substations. The electrical interconnection switching station would also have permanent fencing installed. Temporary fencing around unfinished WTG bases and excavations would be designed primarily to warn people of potential danger associated with construction; such fencing is typically high-visibility plastic mesh. Permanent fencing would be chain-link with locking gates. Project fencing will be designed and constructed to meet appropriate hydrologic performance standards both for flows and to protect water quality and meet regulatory requirements. Other areas presenting safety concerns or where security or thefts could be of concern might also be fenced. The Applicant and Western would coordinate fencing with the BLM.

The final WTG layout would be submitted to the Federal Aviation Administration (FAA) for review and approval prior to construction. The FAA could recommend that tower markings or aviation safety lighting be installed on all or some of the WTG towers. FAA regulations generally require lighting on structures taller than 200 feet. The WTGs proposed under the action alternatives would be higher than 200 feet and, therefore, would require appropriate obstruction lighting. However, the FAA may determine that the absence of marking and/or lighting would not threaten aviation. Recommendations on marking and lighting structures vary depending on terrain, local weather patterns, geographic location, and, in the case of wind farms, the cumulative number of towers and overall site layout.

Based on the lighting and marking requirements for similar projects and the FAA Obstruction Marking and Lighting Advisory Circular (AC70/7460-1K), determination of an adequate lighting setup for the Proposed Project is expected. It is anticipated that the probable lighting setup would consist of two medium-intensity, flashing white lights operating during the daytime and at twilight, and two flashing red beacons operating during the night. The intensity of the lights would be based on a level of ambient light, with illumination below 2 foot-candles being normal for the night, and illumination of above 5 foot-candles being the standard for the day. It is anticipated the lights would be located on several strategically selected WTGs to adequately mark the extent of the facility, rather than on every WTG.

2.3.4 Operations and Maintenance

Following installation and startup, routine maintenance of the WTGs would be necessary to maximize performance and detect potential difficulties. Routine activities primarily would consist of daily visits by maintenance workers who would test and maintain the wind facilities. O&M staff would travel in pickups or other light-duty trucks. Most servicing and repair would be performed within the nacelle, without using a crane to remove the WTG from the tower. Occasionally, the use of a crane or equipment transport vehicles might be necessary for cleaning, repairing, adjusting, or replacing the rotors or other components of the WTG.

Monitoring the Proposed Project operations would be conducted from computers located in the base of each WTG tower and from the O&M building using telecommunication links and computer-based monitoring. Over time, it would be necessary to clean or repaint the blades and towers, and periodically exchange lubricants and hydraulic fluids in the mechanisms of the WTGs. All lubricants and hydraulic fluids would be stored, used, and disposed of in accordance with applicable laws and regulations. Any necessary repainting would be performed by licensed contractors in compliance with applicable laws and regulations.

The WTG gearboxes would be sealed to prevent lubricant leakage. The gearbox lubricant would be sampled periodically and tested to confirm that it retains adequate lubricating properties. When the lubricants have degraded to the point where they no longer contain the needed lubricating properties, the gearbox would be drained and new lubricant would be added. Transformers contain oil for heat dissipation, and are sealed and contain no moving parts. The transformer oil would be subject to periodic inspection but should not need replacement. If necessary, moats may be constructed around the gearbox to insure hazardous materials are contained. If moats are constructed, they will be equipped with textured ramps to insure that wildlife, if entrapped, has an exit route.

O&M equipment and vehicles would be properly maintained at all times to prevent leaks of motor oils, hydraulic fluids, and fuels. During operations, O&M vehicles would be serviced and fueled at the O&M building or at an offsite location. A Spill Prevention, Containment, and Countermeasures Plan (SPCCP) would be prepared for the Proposed Project and would contain information regarding training, equipment inspection and maintenance, and refueling for construction vehicles, with an emphasis on preventing spills.

The Proposed Project would produce nonhazardous waste during O&M activities, which might include rags, broken or used metal machine and/or electrical parts, empty containers, typical refuse generated by employees in the field and office, and miscellaneous solid wastes. This waste would be properly disposed of at an approved landfill accepting Class I Municipal Solid Waste (MSW) and/or Class III Industrial Waste within Clark County, Nevada.

2.3.5 Hazardous Materials

Hazardous materials are those chemicals listed in the Environmental Protection Agency Consolidated List of Chemicals Subject to Reporting under Title III of the Superfund Amendments and Re-authorization Act of 1986. No hazardous or extremely hazardous materials (as defined by 40 CFR; Section 355) are anticipated to be produced, used, stored, transported, or disposed of as a result of this project.

2.3.6 Department of Defense Airborne Radar Testing

The Department of Defense (DoD) conducts important training and testing activities in the general area of the proposed Searchlight Wind Project. The DoD evaluated the proposed wind project to assess potential impact to the DoD training and testing mission and determined that construction and decommissioning activities would not impact DoD's training and testing mission. However, operation of the proposed wind project could have some adverse effect during limited periods of airborne radar testing. The BLM and

DoD, in consultation with the applicant, examined numerous options to mitigate the potential impact to airborne radar testing and determined that a curtailment of wind turbine operations during limited periods of airborne radar flight-testing operations was potentially feasible. The Applicant and the DoD have agreed as a condition of the BLM right-of-way authorization to negotiate a mutually acceptable Wind Turbine Curtailment Agreement. The right-of-way authorization would require the operator to comply with the terms and conditions of any Wind Turbine Curtailment Agreement. In the event other more effective mitigation options are developed in the future, DoD will no longer require curtailment of wind turbine operations.

2.3.7 Reclamation

Reclamation refers to the restoration or rehabilitation of lands used temporarily during a construction activity (such as laydown areas) to their approximate condition prior to construction. After construction is complete, temporary work areas, trenches, and tower pads would be graded to the approximate original topographic contours, and the areas would be revegetated with a certified weed-free BLM-approved mixture of native grass, forbs, and shrub species. Reclamation goals and strategies would be prescribed in the Applicant's Site Rehabilitation Plan, including implementation of all applicable BLM-recommended BMPs.

2.3.8 Decommissioning

When the proposed Searchlight Wind Energy facility is determined to be no longer cost-effective, the project would be decommissioned, and the existing equipment would be removed. Although project owners may want to work with the BLM to repower the site (i.e., replace existing wind energy project equipment with a new project on the same site), repowering is not considered in this analysis. The goal of project decommissioning is to remove installed power generation equipment and return the site to a condition as close to its preconstruction state as feasible. The major onsite activities required for the decommissioning would be:

- WTG and meteorological tower (MET) removal
- Pad-mounted transformer, electrical, and communications system removal
- Structural foundation removal in accordance with ROW grant requirements
- O&M building removal
- Road removal
- Regrading and revegetation

Generally, WTGs, electrical components, and towers are either refurbished and resold, or recycled for scrap. All unsalvageable materials would be disposed of at authorized sites in accordance with applicable laws and regulations.

To ensure that permanent closure of the facility would not have an adverse effect, a Site Rehabilitation Plan and Facility Decommissioning Plan would be developed and approved by the BLM prior to commencement of site closure activities. The Facility Decommissioning Plan would be consistent with the goals and requirements mandated in the Site Rehabilitation Plan.

WTG towers would be removed and at a minimum the upper 3 feet of the substation foundations and WTG pads would be removed. Assuming that the transmission line would not be used for other potential developments, all structures, conductors, and cables would be removed. Abandoned roads would be reclaimed or left in place based on BLM's preference at the time of decommissioning. Site reclamation after decommissioning would include treating all disturbed areas with a BLM-approved certified weed-free native seed mix. The ROW would then be terminated.

2.3.9 Project Design and Best Management Practices

The action alternatives would be subject to BLM-recommended BMPs (Appendix C). The BMPs represent standards from the BLM Right-of-Way Management Manual 2801, Handbook H-2801-1 and the Wind Energy Development Program Policies and BMPs. These BMPs are designed to guide construction activities and development of facilities to minimize environmental and operational impacts. These include standards associated with overall project management, surface disturbance, facilities design, erosion control and revegetation, hazardous materials, project monitoring, and responsibilities for environmental inspection. As part of the Avian and Bat Protection Plan (ABPP), bird and bat fatality monitoring using methods and protocols similarly employed at other operating wind energy projects in the U.S. but tailored to the Searchlight site would be required for 3 years, commencing after calibration trials of search methodologies and effort occurs prior to project setup.

2.4 Western's Proposed Federal Action

2.4.1 Western's Interconnection Switching Station

Western proposes to construct, own, and operate a new switching station to interconnect the Proposed Project with Western's transmission system. It is anticipated that the switching station would become a permanent part of the Western Transmission system. The proposed switching station would be located just west of Western's existing Davis-Mead 230-kV transmission line, approximately 7.5 miles east of the town of Searchlight, north of Cottonwood Cove Road approximately 150 feet north of the NPS Fee Station (Figure 2.1-1). Access to the proposed switching station would be along the existing Davis-Mead transmission line road, entering off Cottonwood Cove Road. The transmission line road would require improvement for approximately 0.5 mile to be suitable for traffic to the site by construction vehicles, equipment delivery, and Western construction and maintenance personnel.

Facilities would include a control building, microwave tower, take-off structures and other steel support structures, buswork, and electrical and control equipment for switching, protection, metering, safety, and O&M purposes. The switching station would occupy approximately 3.5 acres, with an additional 2.5 acres outside the security fence required for site preparation, drainage, and road access. An 8-foot-tall chain-link fence topped with razor wire would provide security for the switching station. Adequate space would be provided inside the fence to maneuver construction and maintenance vehicles. Additionally, the facility would be sized to accommodate additional bays for future interconnections.

The terrain at the proposed location of the switching station features rolling hills and dry washes. Substantial civil design and earth moving would be required to level the station yard and provide for site drainage and roads, including excavation, grading, and other site improvements to accommodate the required electrical equipment. Construction would be performed by a Western-managed contractor in accordance with Western's standard environmental protection provisions (Standard 13, July 2009) and safety standards. A representative from Western would be present at all times while a contractor was working on site.

Three power circuit breakers would be installed at the switching station to facilitate two interconnections for the existing transmission line and one for the proposed wind energy facility line. These breakers would be used to automatically interrupt power flow in the event of an electrical fault. Gas breakers planned for the proposed switching station would be insulated by special nonconducting gas (sulfur hexafluoride [SF_6]). During normal operation of the new switching station, authorized Western personnel would conduct periodic inspections and service equipment as needed. Western would monitor and manage the use, storage, and replacement of SF6 to minimize any releases to the environment. Gas used in switching station circuit breakers is contained in sealed units that are factory-certified to not leak; equipment would be monitored nonetheless. Seven disconnect switches used to mechanically disconnect or isolate equipment would be installed. A 3-inch deep layer of gravel surfacing selected for its insulating

properties would be placed on the ground within the substation to protect O&M personnel from electrical danger in the event of electrical faults.

Power would move within the substation and between breakers and other equipment on bus tubing (smooth aluminum pipe less than 6 inches in diameter). Bus tubing would be elevated by supports called bus supports. Buswork within the proposed switching station would route the wind energy facility's output to the Davis-Mead transmission line. The buswork would be approximately 30 feet high.

Electric/electronic controls and monitoring equipment for the power system would be housed in a building approximately 30 feet by 60 feet within the switching station. The control building would be environmentally controlled to provide a suitable environment for the equipment housed there. Station service power would be supplied by a tap on an adjacent local utility distribution line and/or from a 230-kV power voltage transformer within the switching station. A new distribution line approximately 1000 feet long would be constructed between the switching station and the existing distribution line on single wood-pole (monopoles) structures. The primary station service source would be determined during the design phase for the switching station.

2.4.2 Western's Transmission Interconnection

Western proposes to install two new transmission line structures to tie in the new switching station with the Davis-Mead 230-kV transmission line. Each turning structure would be a steel monopole structure, self-supporting with no down-guys. These structures would provide for turning the line into the station at angles of 90 degrees or more to line up and connect with the take-off structures within the proposed switching station. It is envisioned that the new structures would be located within the existing Davis-Mead transmission line ROW in the span between the two existing structures east of the proposed switching station.

A temporary line (often referred to as a "shoo-fly") might be built in order to keep the Davis-Mead transmission line operational while the bulk of the switching station construction is being completed. When the new switching station is complete and ready for energization, the existing Davis-Mead transmission line conductors in the span east of the station would be cut and attached to the new turning structures. New conductors would be installed from the new turning structures to the steel take-off structures within the switching station.

2.4.3 Western's Communication Facilities

Western requires redundant communication with its substations from its Phoenix Operations Center. Microwave communications require an unobstructed line-of-sight between antennas. A microwave communication tower under 100 feet high would be installed within the switching station to provide the primary communications path via microwave to an existing communications site at Christmas Tree Pass, about 16 miles southeast of the proposed switching station. The exact height of the tower would be determined during the design. New communication equipment would be provided at the switching station.

The second, or redundant path, would be provided by a fiber-optic cable to the Searchlight regeneration site, located under Western's Davis-McCullough 230-kV transmission line, located just west of Searchlight. The fiber-optic cable would be under-built on a portion of the tie line between the new switching station and the wind energy facility. From there, the fiber-optic cable would use existing utility pole lines through Searchlight west to the regeneration site.

2.4.4 Western's Other System Improvements

Details, requirements, and environmental impacts for other system improvements are unknown at this time because they would be dictated by the ongoing transmission system studies and future design work. Installations could include new concrete foundations, substation buswork, cable trenches, buried cable grounding grid, and new surface grounding material; and/or replacing existing equipment to

accommodate the proposed interconnection. It is anticipated that the installations would be set up within previously developed areas within existing substations. However, if it is determined that work outside an existing facility is required, then Western would address the work in accordance with regulatory requirements.

2.5 Comparison of Alternatives

Table 2.5-1 provides a comparison of the action alternatives by Proposed Project features. Table 2.5-2 provides a summary of acres of permanent and temporary ground disturbance by Proposed Project feature.

Table 2.5-1. Comparison of Action Alternatives by Proposed Project Feature

Project Features	96 WTG Layout Alternative	87 WTG Layout Alternative
Project power-generating capacity (in MW)	220.8	200.1
Number of WTGs	96	87
WTG capacity (in MW)	2.3	2.3
WTG hub height (in feet)	262	262
WTG rotor diameter (in feet)	331	331
Project roads total (in miles) [a]	37.6	35.9
Existing (modified to 16 feet width)	0.5	0.5
Existing (modified to 36 feet width)	8.7	8.1
New (16 feet width)	1.7	1.7
New (36 feet width)	27.3	25.6
New overhead transmission lines (230 kV) North Substation to Western Switching Station South Substation to North Substation	8.7 miles (total) 2.6 miles 6.1 miles	8.7 miles (total) 2.6 miles 6.1 miles
New Collection Lines (34.5 kV) New Overhead Collection Lines Underbuild Collection Lines	7.9 miles (total) 5.2 miles 2.7 miles	7.9 miles (total) 5.2 miles 2.7 miles
Underground collection lines (34.5 kV) [b]	28.2 miles	28.2 miles
Substations	2	2
Meteorological towers	4	4
O&M building	1	1
Laydown areas	2	2
Temporary ground disturbance (in acres) [c d]	248.5	229.7
Permanent ground disturbance (in acres) [e]	159.21	151.81
Western's switching station temporary ground disturbance (in acres)	2.5	2.5
Western's switching station permanent ground disturbance (in acres)	3.5	3.5
Generating Facility Construction Features		
Truck trips to build project roads and WTG foundations	9,211	8,372
Truck trips to build project (WTGs, substations, O&M facility, other)	720	653
Total truck trips	9,931	9,025
Number of temporary concrete batch plants	1	1
Number of rock crusher stations	1	1

Notes:

Project Features	96 WTG Layout Alternative	87 WTG Layout Alternative

a. Existing road/trail area was based upon an existing width of 12 feet.
b. Underground collection/communication lines are assumed to be contained within access roads; therefore, they do not generate additional disturbance.
c. Temporary disturbance for WTG pads includes the assembly areas for the WTGs in accordance with Siemens Typical Specifications.

Temporary construction impacts would be in addition to permanent impacts.
Permanent disturbance for WTG pads are based upon a 40' x 40' pad.
kV = kilovolts; MW = megawatts

Table 2.5-2. Approximate Acreages that would be Affected by Development of Action Alternatives

Project Features	Approximate Temporary Construction Disturbance (acres)[a]		Approximate Permanent Construction Disturbance (acres)	
	96 WTG Layout Alternative	87 WTG Layout Alternative	96 WTG Layout Alternative	87 WTG Layout Alternative
WTG pads	72.6	66	3.6	3.2
New and upgraded project roads and crane pads[b]	123.6	111.4	149	141.6
Operations and maintenance facility	1.5	1.5	5	5
Equipment storage and construction laydown areas[c]	28.3	28.3	0	0
Overhead transmission line right-of-way	16.5	16.5	0	0
Substations	5	5	2.0	2.0
Batch plant	1	1	0	0
Meteorological towers	0	0	0.01	0.01
Totals	248.5	229.7	159.61	151.81
Totals Rounded	249	230	160	152

Notes:
[a] Temporary construction impacts are in addition to permanent impacts.
[b] Restoration of roadsides.
[c] Includes temporary office trailers and crane assembly areas.

2.6 Mitigation Measures

For the wind facility component of the Proposed Project, mitigation measures have been proposed and committed to by the Applicant as best management practices and design features (Table 2.6-1). The APMs were developed in close coordination with BLM and drawn from a variety of sources including state and federal lists of standard BMPs. Those agencies publish these lists that include the recognized best available management practices. The APMs were incorporated as inherent elements of the project to eliminate, minimize, reduce, and/or rectify anticipated impacts. Additionally, the wind energy portion of the project would adhere to the BLM wind energy development program policies and BMP (Appendix C). For Western's proposed switching station portion of the project, Western requires its construction contractors to implement standard environmental protection provisions. These provisions are provided in Western's Construction Standard 13 (Appendix D). Table 2.6-2 describes additional project-specific mitigation measures (MMs) that would be implemented as part of the project. The APM's were particularly selected because they have the highest likelihood of being effective, based on based on BLM's past experience with numerous projects.

Table 2.6-1. APMs (common to action alternatives)

APM-1 EROSION CONTROL AND TOPSOIL MANAGEMENT

Soil stabilization measures will be used to prevent soil being detached by stormwater runoff. The Applicant will employ BMPs to protect the soil surface by covering or binding soil particles. The Project will incorporate erosion-control measures required by regulatory agency permits and contract documents as well as other measures selected by the contractor. The contractor will design site-specific BMPs, and associated figures are to be included in the final Project stormwater pollution prevention plan (SWPPP). At a minimum, the Project will implement the following practices for temporary and final erosion control:

During Construction:

- Proper removal and storage of topsoil
- Proper reapplication of topsoil

Year-round:

- Monitor the weather using National Weather Service reports to track conditions and alert crews to the onset of rainfall events.
- Preserve existing vegetation where required and when feasible. Conduct clearing and grading only in areas necessary for project activities and equipment traffic. Install temporary fencing prior to construction along the boundaries of the construction zone to clearly mark this zone, preventing vehicles or personnel from straying onto adjacent offsite habitat.
- Sequence construction activities with the installation of erosion control and sediment control measures. Arrange the construction schedule as much as practicable to leave existing vegetation undisturbed until immediately prior to grading.
- Protect slopes susceptible to erosion by installing controls such as hay bales, fiber rolls, and gravel bags.
- Stabilize non-active areas as soon as feasible after construction is complete and no later than 14 days after construction in that portion of the site has temporarily or permanently ceased. Reapply as necessary to maintain effectiveness.
- Place covers over stockpiles prior to forecasted storm events and during windy conditions. Place sediment controls (fiber rolls or gravel bags) around the perimeter of stockpiled materials year-round. Excess sand and gravel will be stockpiled for BLM material sale.
- Maintain sufficient erosion control materials on site to allow implementation in conformance with General Permit requirements and as described in the SWPPP. This includes implementation requirements for active areas and non-active areas that require deployment before the onset of rain.
- Promptly repair and reapply controls according to BMPs in areas for which erosion is evident.

During the rainy season:

- Implement temporary erosion control measures such as fiber rolls, straw bales, geotextiles and mats, and gravel bags at regular intervals throughout the defined rainy season and as needed determined by site conditions.
- Inspect and stabilize disturbed areas with temporary or permanent erosion control measures before rain events.

During the non-rainy season:

Conduct construction activities that will have an impact on waters of the United States during the dry season to the extent feasible to minimize erosion.

- A combination of the following erosion controls may be used at the site:
- Scheduling of activities to avoid times of erosion susceptibility
- Preservation of existing vegetation
- Mulch and hydraulic mulch
- Straw mulch
- Geotextiles and mats
- Earth dikes and drainage swales
- Velocity dissipation devices

Table 2.6-1. APMs (common to action alternatives)

- Slope drains

Streambank stabilization
BMPs will be deployed in a sequence to follow the progress of grading and construction. As the locations of soil disturbance change, erosion controls will be adjusted accordingly to control stormwater runoff at the downgrade perimeter.

Sediment Control Measures
Sediment controls are intended to complement and enhance selected erosion control measures and reduce sediment discharges from active construction areas. Sediment controls are designed to intercept and settle out soil particles that have been detached and transported by the force of water. The Project will incorporate sediment control measures required by regulatory agency permits and contract documents as well as other measures selected by the contractor. The Project will implement the following practices for temporary sediment control:

Year-round:

- The installation of detention ponds to control all stormwater flow off site. The ponds will be designed to control sediment transport off site. Sediment will be removed from the ponds periodically and transported off site to a designated fill area.
- Maintain the following temporary sediment control materials onsite: silt fence materials, gravel bags for linear barriers, and fiber rolls in sufficient quantities throughout the Project to implement temporary sediment controls in the event of predicted rain and to respond to failures or emergencies, in conformance with General Permit requirements and as described in the SWPPP. Install gravel filter berms at the base of slopes adjacent to delineated sensitive areas (wetlands, dry washes), if any. Native onsite stones/rocks will be used in construction of gravel filter berms or check dams.
- Install gravel filter berms along the boundaries of delineated sensitive areas, if any, within the boundaries of the project site or areas that receive runoff from the project site. Native onsite stones/rocks will be used in construction of gravel filter berms or check dams.

During the rainy season:
Implement temporary sediment controls at the draining perimeter of disturbed soil areas, at the toe of slopes, and at outfall areas.

During the non-rainy season:
Implement temporary sediment controls such as hay bales, fiber rolls, or gravel bags at the draining perimeter of disturbed soil areas. A combination of the following sediment controls may be used at the site:

- Silt fence
- Sediment basin
- Sediment trap
- Check dam
- Fiber rolls
- Gravel bag berm
- Street sweeping and vacuuming

**BMPs will be deployed in a sequence to follow the progress of grading and construction. As the locations of soil disturbance change, sedimentation controls will be adjusted accordingly to control storm water runoff at the downgrade perimeter.

Table 2.6-1. APMs (common to action alternatives)

APM-2 EXCAVATION/GRADING Prior to trench excavation, the area to be trenched will be graded and organic matter removed. Organic matter will be mulched and re-deposited within the site fill except under foundations and in trenches. Trench excavation will be performed with conventional trenching equipment. Excavated soil will be maintained adjacent to the trench and used to backfill the trench once conductors are installed and tested. Excavated soil will not be removed from the project site. Temporary sheeting or bracing shall be used as necessary to support trench sidewalls in areas where soils are soft or collapsible. The trench itself will be first backfilled with 3 to 4 inches of sand to provide suitable bedding for installed conductors, and then 3 to 4 inches of sand will be deposited on top of installed conductors. The remaining backfill will be composed of the native excavated soils and compacted to 90 percent of standard proctor density. During the backfill, underground utility marking tape will be installed 12 inches below grade to indicate the type of conductors installed beneath.
APM-3 AIR QUALITY / DUST CONTROL In accordance with Section 12 of the Air Quality Regulations, the applicant would obtain an air quality permit for any emission units or stationary sources (e.g., concrete plants, rock crushers, boilers, emergency generators) on the project capable of emitting regulated pollutants. The Applicant would use water to control dust to comply with Clark County dust control requirements. Where water is insufficient to control dust, soil stabilizers approved by the BLM and USFWS would be used within project area to control dust to Clark County standards. The Project would implement the following practices for fugitive dust and wind erosion control: • Minimize grading and vegetation removal, and limit surface disturbance during construction to the time just construction; • Limit vehicular speeds on non-paved roads; • Apply water to disturbed soil areas of the project site to control dust and maintain optimum moisture levels for compaction, as needed. Apply the water using water trucks. Minimize water application rates as necessary to prevent runoff and ponding; • Apply dust control suppressants approved by the BLM and USFWS; • During windy conditions (forecast or actual wind conditions of approximately 25 miles per hour or greater), apply dust control to haul roads to adequately control wind erosion. Cover exposed, stockpiled, material areas; • Suspend excavation and grading during periods of high winds; and • Cover all trucks hauling soil and other loose material or maintain at least 2 feet of freeboard.
APM-4 STORMWATER POLLUTION PREVENTION PLAN The project design and plans will include BMPs to mitigate potential soil erosion caused by construction and operation of the Project. SWPPPs will be developed to assist with the management and protection of water resources throughout construction and the life of the Project.
APM-5 SPILL PREVENTION, CONSTROL, AND COUNTERMEASURES PLAN (SPCCP) The Applicant would prepare a SPCCP in accordance with Federal regulations to protect the environment from spills of petroleum products.
APM-6 HEALTH AND SAFETY PROGRAM The Applicant considers the health and safety of its employees and contractors to be the highest priority for project construction and operation and will require that all employees and contractors adhere to appropriate health and safety plans and emergency response plans. All construction and operation contractors will be required by the Applicant to operate under a health and safety program that is approved by the Applicant and that meets industry standards. All contractors will be required to maintain and carry health and safety materials including the Material Safety Data Sheets (MSDSs) of hazardous materials used on site.

Table 2.6-1. APMs (common to action alternatives)

APM-7 EMERGENCY RESPONSE PLAN

An Emergency Response Plan will be prepared for the Project. The Plan will contain a section that presents the results of a comprehensive facility hazard analysis and, for each identified hazard, a response plan. Emergencies may include brush or equipment fires, transformer oil leaks or spills, attempted acts of sabotage, and airplane crashes. The Emergency Response Plan will assign roles and actions for onsite personnel and responders and will designate assembly areas and response actions.

APM-8 WASTE MANAGEMENT PLAN

The Applicant would prepare a Waste Management Plan that would describe the storage, transportation, and handling of wastes and would emphasize the recycling of wastes, where possible, and would identify the specific landfills that would receive wastes that could not be recycled. Construction wastes will be managed in accordance with the Resource Conservation and Recovery Act (RCRA) (42 USC 6901, et seq. and RCRA's implementing regulations at 40 CFR 260, et seq.) and other applicable state and local regulations.

APM-9 WEED CONTROL PLAN

The Applicant would prepare a Weed Control Plan which would be submitted to the BLM for review and approval before construction begins. The following are project-specific measures that the Applicant would implement to control weeds:

- **Weed Risk Assessment Form.** This form provides information about the types of weed surveys to be conducted and weed treatment and prevention method schedules appropriate for the types of weeds likely to be present. This form identifies and evaluates the level of weed management necessary.
- **Herbicide Use Proposal.** The Applicant shall prepare, submit, obtain, and maintain a herbicide use proposal for the Project. The Applicant would coordinate weed control activities with the BLM Weed Coordinator, particularly regarding proposed herbicide treatments.
- **Weed Management Plan.** Before ground-disturbing activities begin, the Applicant would prepare a weed management plan. The plan would identify potential weed infestations at the project site and along the Project-associated linear facilities and would prescribe treatment.
- **Weed Infestation Prevention.** The Applicant would limit ground disturbance to the minimum necessary to safely construct and operate the Project. The Applicant would avoid creating soil conditions that promote weed germination and establishment.
- **Equipment Cleaning Sites.** In coordination with the BLM Southern Nevada District Weed Manager, the Applicant would determine and establish equipment cleaning sites to remove weed seeds, plant parts, or mud and dirt from vehicles. Project-related equipment and machinery would be cleaned using compressed air or water to remove mud, dirt, and plant parts before moving into and from relatively weed-free areas. Seeds and plant parts would be collected, bagged, and deposited in dumpsters destined for local landfills, when practical.

The following measures would be implemented to prevent infestations of weeds at the project site and to control any potential infestations that may occur during project construction and operation:

- Project construction workers would inspect, remove, and dispose of weed seed and plant parts found on their clothing and personal equipment, bag the product, and dispose of in a dumpster for deposit in a local landfill;
- Certified weed-free hay bales would be used for erosion control and to contain vehicle station wash water.

APM-10: SITE REHABILITATION PLAN AND FACILITY DECOMMISSIONING PLAN

To ensure that the permanent closure of the facility does not have an adverse effect, a Facility Decommissioning Plan would be developed at least 6 months prior to commencement of site closure activities. The Facility Decommissioning Plan would be developed in coordination with the BLM, with input from other agencies as appropriate. The Facility Decommissioning Plan would address future land use plans, removal of hazardous materials, impacts and mitigation associated with closure activities, schedule of closure activities, equipment to remain on the site, and conformance of the plan with applicable regulatory requirements and resource plans. The Facility Decommissioning Plan

Table 2.6-1. APMs (common to action alternatives)

would be consistent with requirements and goals set in the Site Rehabilitation Plan. The activities involved in the facility closure would depend on the expected future use of the site. Certain facility equipment may be utilized for future uses of the site, such the operation and maintenance (O&M) building, electrical transmission lines, and roads. Therefore, the extent of site closure activities would be determined at the time of the closure, in accordance with the Facility Decommissioning Plan. Closure activities may include:

- Removal of WTG's and supports;
- Removal of foundations;
- Removal of underground facilities to a depth of at least 2 feet below the ground surface;
- Removal of electrical equipment such as inverters and transformers;
- Removal of the substation;
- Disposal of chemicals and hazardous waste;
- Draining of transformers and disposal of dielectric oils (if transformers cannot be resold);
- Demolition and removal of the O&M building and removal of building foundations;
- Removal of onsite wooden transmission poles and conductors;
- Removal of 220kv/230kv steel transmission poles and conductors, and removal of foundations to a depth of at least 2 feet below the ground surface;
- Closure and abandonment the septic tank;
- Removal of site fencing;
- Regrading and restoration of original site contours; and
- Revegetation of areas disturbed by closure activities in accordance with the Site Rehabilitation Plan.

APM-11 AERONAUTICAL CONSIDERATIONS.

Due to the proximity to the Searchlight Airport to the Project, prior to construction, the Applicant would file Notices of Proposed Construction or Alternation (Form 7460s) and receive a Determination of No Hazard to Air Navigation (NOHA) from the Federal Aviation Administration (FAA) for each WTG for Project lighting and marking requirements in accordance with the FAA Obstruction Marking and Lighting Advisory Circular (AC70/7460-1K).

APM-12 CULTURAL

If archaeological properties are found to be eligible for National Register for Historic Properties (NRHP) listing, the Applicant would assess the potential adverse impact of the Project and would prepare a plan to mitigate any potentially adverse impacts, in consultation with the BLM and Nevada State Historic Preservation Officer (SHPO).

APM- 13 ENVIRONMENTAL CLEARANCE

Initial site mobilization activities in each construction section would include environmental clearance in which site activities are reviewed and approved for compliance with resource protection plans and approved construction-compliance documents. Environmental clearance activities would:

- Be performed in each of the project construction sections as they are constructed;
- First be obtained for the site access roads, WTG sites, transmission line corridors, substations, Western switching station, and O&M area. Subsequent clearances would be obtained for each of the remaining major tasks; and
- Delineate and mark the boundaries of each construction area during each phase of environmental clearance;
- Conduct surveys for special status plant species and bird nests. If special status plant species are found, the applicant would notify the BLM to determine appropriate action. If an active bird nest is located, a buffer would be established where no construction activities would occur. The buffer will be established in coordination with the BLM, USFWS, and NDOW for each species deterred nesting in the project area and maintained until the birds have fledge or the onsite biologist makes a

Table 2.6-1. APMs (common to action alternatives)

recommendation to the agencies to increase or decrease the buffer distance based on nest monitoring.
APM–14 GENERAL DESIGN AND CONSTRUCTION STANDARDS The Project would be designed in accordance with federal and industrial standards including American Society of Mechanical Engineers (ASME), National Electric Code (NEC 2005), International Energy Conservation Code (IECC 2006), International Building Code (IBC 2006), Uniform Plumbing Code (UPC 2006), Uniform Mechanical Code (UMC 2006), National Fire Protection Association (NFPA) and Occupations Safety and Health Administration (OSHA). Construction will be in accordance with the federal codes listed above and all applicable state and local codes. Local Clark County codes will include Title 13 – Fire and Fire Prevention, Title 22 – Buildings and Construction, Title 24 – Water, Sewage and Other Utilities and Title 25 – Plumbing and Electrical Regulations.

Table 2.6-2. Mitigation Measures

Mitigation Measure No.	Mitigation Measure Description
4.1 Geology, Minerals, and Soils	
MM GEO-1: ENGINEERING DESIGN AND IMPLEMENTATION	To minimize or avoid the hazard of landslides in cut-and-fill slopes, or settlement of fill materials, the Applicant will conduct BLM-approved geotechnical engineering and geologic design studies to assess the stability of planned cut-and-fill slopes. This will include geotechnical observations and materials testing of the compaction and placement of fill materials for roads and WTG pads. The Applicant would document that the grading and earthwork were in accordance with the engineering design specifications.
MM GEO-2: INSPECTIONS AFTER GEOLOGIC EVENTS	To minimize or avoid potential hazards from earthquakes and other geologic events, the Applicant will have inspections performed by a BLM-approved appropriate professional (e.g., geologist, geologic engineer, geotechnical engineer, or structural engineer) following geologic events in the vicinity of the Proposed Project site. The appropriate professional will perform the appropriate inspection and make recommendations to see that hazards are minimized for the next comparable or larger event. The Applicant will implement the recommended corrective actions..
MM GEO-3: APPLICANT'S INSURANCE COVERAGE	The Applicant shall acquire the appropriate insurance coverage to address potential offsite damage to structures or injury to people by facility structures that are moved offsite by a geologic event such as an earthquake, windstorm, or flash flood event.
MM GEO-4: VERIFY MINING CLAIMS	The Applicant shall ground-truth existing mining operations before construction and coordinate with mine operators to reduce impacts to these existing mining claims.
4.2 Paleontological Resources	
MM PALEO-1: PALEONTOLOGICAL MITIGATION	The Applicant will immediately notify the BLM authorized officer of any paleontological resources discovered as a result of operations under this authorization. The Applicant will suspend all activities in the vicinity of such discovery until notified to proceed by the authorized officer, and will protect the locality from damage or looting. The authorized officer will evaluate, or will have evaluated, such discoveries as soon as possible, but not later than five working days after being notified. Appropriate measures to mitigate adverse effects on significant paleontological resources will be determined by the authorized officer after consulting with the Applicant. The Applicant is responsible for the cost of any investigation necessary for the evaluation and for any mitigation measures, including museum curation. The Applicant may not be required to suspend operations if activities can avoid further impacts on a discovered locality or be continued elsewhere (BLM 2009: Attachment 1-4).
4.3 Water Resources	
MM WATER-1: WELLHEAD PROTECTION	Development of the O&M building and its associated septic system would require a wellhead protection plan. The State of Nevada's Wellhead Protection Ordinance encourages protection of public health and water supplies by ensuring there are appropriate distances between wells and potential sources of contamination (Clark County 2008).

Table 2.6-2. Mitigation Measures

Mitigation Measure No.	Mitigation Measure Description

MM WATER-2: CONSTRUCTION PHASE EROSION AND SEDIMENTATION CONTROL MEASURES.	The Applicant will develop and implement erosion and sedimentation control measures to be used to minimize impacts during the construction of the Project. At a minimum, this plan will include the following:
	• Implement soil stabilization measures to offset loss in vegetation including the following
	  • BMPs
	  • install silt fences
	  • install temporary earthen berms,
	  • install straw bale barriers to reduce water velocity and flows,
	  • install temporary water bars,
	  • install sediment traps,
	  • install stabilized entrances from public roads to minimize track-out
	  • stone check dams, or other equivalent measures (including installing erosion-control measures around the perimeter of stockpiled fill material) as necessary;
	• Maintain or reduce salt yields originating from public lands to meet State-adopted and Environmental Protection Agency-approved water quality standards for the Colorado River (BLM 1998);
	• Implement BMPs, as identified by the state of Nevada, to minimize contributions from both point and non-point sources of pollution (including salts) from public lands (BLM 1998);
	• Ensure that any nonpoint source BMPs and rehabilitation techniques meet state and local water quality requirements (BLM 2005a);
	• Implement BMPs such as locating waste and excess excavated materials outside drainages to avoid sedimentation;
	• Conduct regular site inspections during the construction period to see that erosion-control measures were properly installed and are functioning effectively;
	• Consider use of landscape for buffering, erosion control, and stormwater runoff control for maintaining acceptable water quality conditions (Clark County 2008);
	• Obtain and comply with necessary permits in accordance with the Clean Water Act Section 404 (dredge and fill) and Section 401 (water quality) from the USACE and Nevada Division of Environmental Protection (NDEP 2010; and
	• Implement adaptive management of actions if erosion and sedimentation control measures are found to be insufficient to control surface water at the site (any changes must be approved by the BLM).

Table 2.6-2. Mitigation Measures

Mitigation Measure No.	Mitigation Measure Description
MM WATER-3: CONSTRUCTION-PHASE PETROLEUM AND HAZARDOUS MATERIAL CONTAMINATED WATER PREVENTION AND CONTROL MEASURES.	The Applicant will develop and implement contaminant control measures to be used to minimize impacts during the operation and maintenance of the Proposed Project. At a minimum, these measures will include the following: • Prepare and comply with a Spill Prevention, Containment, and Countermeasures Plan (SPCCP) that outlines procedures to prevent the release of hazardous substances into the environment, thereby avoiding contaminating water resources (U.S. Environmental Protection Agency [EPA] 2010); • Stage heavy maintenance equipment over impermeable surfaces and inspect regularly for petroleum releases; • Conduct regular site inspections during operations and maintenance to see that petroleum and hazardous materials products are properly stored and inventoried in accordance with local, state, and federal regulations; and • Implement BMPs, as identified by the state of Nevada, to minimize contributions from both point and nonpoint sources of pollution (including salts) from public lands (BLM 1998).
MM WATER-4: OPERATIONAL PHASE EROSION AND SEDIMENTATION CONTROL MEASURES	The Applicant will develop and implement erosion and sedimentation control measures to be used to minimize impacts during the operations and maintenance of the Proposed Project. At a minimum, this plan will include the following: • Implement and maintain soil stabilization measures developed for MM WATER-2 to offset loss in vegetation; • Conduct biannual and post-storm monitoring of erosion and sedimentation; and • Conduct regular site inspections during operation and maintenance to see that erosion-control measures installed during the construction-phase (MM WATER-2) are properly installed and are functioning effectively.
MM WATER-5: OPERATIONAL-PHASE PETROLEUM AND HAZARDOUS MATERIAL CONTAMINATED WATER PREVENTION AND CONTROL MEASURES.	The Applicant will develop and implement contamination control measures to be used to minimize impacts during the construction of the Proposed Project. At a minimum, these measures will include: • Prepare and comply with a SPCCP that outlines procedures to prevent the release of hazardous substances into the environment, thereby avoiding contaminating water resources (EPA 2010); • Stage heavy equipment and O&M vehicles over impermeable surfaces and inspect regularly for petroleum releases; • Conduct regular site inspections during the O&M phase to see that petroleum and hazardous materials products are properly stored and inventoried in accordance with local, state, and federal regulations; and • Implement BMPs, as identified by the State of Nevada, to minimize contributions from both point and nonpoint sources of pollution (including salts) from public lands (BLM 1998).

Table 2.6-2. Mitigation Measures

Mitigation Measure No.	Mitigation Measure Description
MM WATER-6: DRAINAGE CROSSING DESIGN.	If drainages cannot be avoided by infrastructure placement, then the Applicant will design drainage crossings to accommodate estimated peak flows and ensure that natural volume capacity can be maintained throughout construction and upon post-construction restoration. This measure is necessary to minimize the amount of erosion and degradation to which drainages are subject.
MM WATER-7: STORMWATER MONITORING AND RESPONSE PLAN	The Applicant will develop and implement a stormwater monitoring and response plan to be used to minimize impacts from flood damage during the life of the Project. At a minimum, this plan will include: • Visual surveys of all structures for scour following major storm events; • Visual surveys of drainage crossings and fencing to check for damage; • Cleanup of broken equipment if failures do occur; • Inspection and cleanup of downstream areas if debris is transported off site; and • Adaptive management of flood protection and erosion actions if the monitoring plan reveals routine damage to project components due to flooding (Any changes must be approved by the BLM).
4.4 Biological Resources	
MM BIO-1: INTERIM RECLAMATION	Interim reclamation actions are intended to reclaim areas of temporary use such as construction staging areas, and road widening areas. Interim reclamation actions will be initiated upon cessation of area use and no later than 12 months from commencement of operation, weather permitting. Interim reclamation will include the following: • Areas that were cleared for staging or road widening and that are not needed for operation of the proposed project will be recontoured to the original contour, if feasible, or if not feasible, to an interim contour that bends with the surrounding topography. • Wastewater, solids, and pond liners will be removed and disposed of at a proper facility. Areas that were occupied by evaporation ponds will be backfilled with native soil to match the existing surrounding grade and restore drainage function. • Stockpiled topsoil will be spread evenly over the entire disturbed area to within a few feet of the production facilities. Salvaged cactus and yucca would be replanted in these disturbed areas.

Table 2.6-2. Mitigation Measures

Mitigation Measure No.	Mitigation Measure Description
MM BIO-2: CACTUS AND YUCCA SALVAGE PLAN	The Applicant will prepare and implement a cactus and yucca salvage plan. Removal of cacti and yucca in Nevada is governed by Nevada Revised Statute 527.060 - .120 ("Protection of Christmas Trees, Cacti and Yucca") and the associated regulations (Nevada Administrative Code [NAC] Chapter 527). NAC 527.090 requires that all cacti and yucca removed or possessed for commercial purposes have a tag attached thereto. When a cacti or yucca is removed for commercial purposes from BLM-administered land, a tag for the plant is issued by the BLM. "Commercial purposes" is defined as the removal or possession of six or more cacti or yucca on any one calendar day or the removal or possession of less than six plants each for seven or more consecutive days, except when such removal or possession is for scientific or education purposes. See NRS 527.070. Accordingly, to the extent that cacti or yucca removed during the construction of the Proposed Project meet the definition of "commercial purposes", Nevada law requires that tags be obtained from the BLM for each such plant. The Applicant will conduct the following plan for all cactus and yucca species that are salvaged within the Proposed Project area: • The proponent will salvage sufficient cacti and yucca to restore all project temporary impacts to 1.5 times the density of cacti and yucca present in the adjacent native plant community. These cacti and yucca will be held in either an on-site temporary nursery or maintained in an off-site location. Once replanted in the temporary impact areas, the proponent will be responsible for maintaining them so that 80% survivorship is achieved. This activity will be conducted in conjunction with any other revegetation requirements. • The proponent will transplant and maintain cacti and yucca at naturally occurring densities into approximately of 30 acres of BLM identified reclaimed mines, closed roads, and burn scars within 15 miles of the project site. Maintenance will include monitoring and watering for a period of one year. • Any remaining cacti and yucca not salvaged from temporary and permanent impact areas will be purchased by the proponent using BLM Nevada forestry program pricing. • The cactus and yucca salvage will follow SNDO cactus and yucca salvage best management practice guidelines and will be conducted by a qualified contractor with at least three years' experience performing this work in the Mojave Desert.
MM BIO-3: BIOLOGICAL OPINION	• Conservation Measures - proposed by the Applicant and BLM (and denoted in the BO) are as follows: 1 *Waste Management Plan.* The Applicant will prepare a Waste Management Plan, in accordance with applicable laws and regulations, which will describe the storage, transportation, and handling of hazardous materials and wastes; will emphasize the recycling of wastes, where possible; and will identify the specific landfills that will receive wastes that cannot be recycled. 2 *Weed Management Plan.* An Invasive Plant Management Plan will be developed for construction and O&M activities and include results of noxious weed inventories, identification of problem areas, preventative measures, treatment methods, agency specific requirements, monitoring requirements, and herbicide treatment protocol. 3 *Site Rehabilitation and Facility Decommissioning Plan.* The applicant will develop a Reclamation, Restoration, and Revegetation Plan in consultation with appropriate agencies prior to adoption of the Final Environmental Impact Statement that will guide restoration and revegetation activities for all disturbed lands associated with construction of the project and the eventual termination and decommissioning of the project. 4 *Water Usage*. If water is used for fugitive dust control, it will not be allowed to pool on access roads or other project areas, as this can attract desert tortoises. Similarly, leaks on water trucks and water tanks will be repaired to prevent pooling water.

Table 2.6-2. Mitigation Measures

Mitigation Measure No.	Mitigation Measure Description
	5 *Minimize Overhead Collection Line.* Collection lines will be buried to the greatest extent feasible to reduce the opportunity for perches for raptors and ravens. 6 *Reduce Night Lighting.* Night lighting will be reduced in all natural areas to avoid unnecessary visual disturbance to wildlife using directed lighting, shielding methods, and/or reduced lumen intensity except as required by regulatory agencies such as the Federal Aviation Administration. 7 *Clean up.* SWEF will ensure that all unused material and equipment will be removed upon completion of construction activities or maintenance activities conducted. Upon completion, all construction equipment and refuse, including, but not limited to wrapping material, cables, cords, wire, boxes, rope, broken equipment parts, twine, strapping, buckets, metal or plastic containers will be removed from the site and disposed of properly. Any unused or leftover hazardous products will be properly disposed of offsite. 8 *Desert Tortoise Fencing.* Desert tortoise fencing will be installed around permanent facility structures including the O&M building and Western's proposed switching station. 9 *Desert Tortoise Measures.* The applicant or a qualified consultant will provide for the following to reduce impacts to desert tortoise: a. A compliance manager will be designated and will oversee compliance monitoring activities and coordination with authorizing agency(s). Compliance activities will at a minimum include conducting preconstruction surveys, assuring proper handling of desert tortoise, adequate staffing of biological monitors during construction, and upholding all authorized conditions. The compliance manager will oversee all compliance documentation including daily observation reports, non-compliance and corrective action reports, and final reporting to any authorized agency upon project completion. b. Construction monitoring will employ a designated compliance inspection contractor and authorized desert tortoise biologist(s) during the construction phase. A qualified biologist is defined as a person with appropriate education, training, and experience to conduct tortoise surveys, monitor project activities, provide worker education programs, and supervise or perform other implementing actions. An authorized desert tortoise biologist is defined as a wildlife biologist who has been approved to handle desert tortoises by the Service. A minimum of one monitor per crew is needed for construction crews using heavy equipment (e.g., backhoes, large trucks). One roving monitor will monitor multiple times per day in other active construction zones where heavy equipment is not in use. c. All work area boundaries associated with temporary and permanent disturbances will be conspicuously staked, flagged, or otherwise marked to minimize surface disturbance activities. All workers will strictly limit activities and vehicles to the designated work areas. d. Crushing or removal of perennial vegetation in work areas will be avoided to the maximum extent practicable. e. Trash and food items will be contained in closed lid (raven- and coyote-proof) containers. Trash will be removed regularly (at least once a week) to reduce the attractiveness to the site to opportunistic tortoise predators such as common ravens and coyotes and to reduce the possibility of animals ingesting or becoming entangled in foreign matter. f. Pets will not be allowed in working areas unless restrained in a kennel. g. Where possible, motor vehicles will be limited to maintained roads and designated routes. h. Desert tortoise caution signs will be installed on turbine access roads.

Table 2.6-2. Mitigation Measures

Mitigation Measure No.	Mitigation Measure Description
	i. Desert tortoise clearance surveys at the project site must consist of at least two consecutive surveys of the site. Surveys shall involve walking transects less than or equal to 15-feet (5-meters) wide under typical conditions. In areas of sense vegetation or when conditions limit the ability of the surveyors to locate desert tortoise, transects should be reduced in width accordingly. Clearance surveys should be conducted when desert tortoises are most active (April-May or September-October). If desert tortoise are observed during the second pass, the USFWS and the appropriate State wildlife agency may require a third survey. j. All methods used for handling desert tortoises during the clearance surveys must be in accordance with the Desert Tortoise Field Manual (USFWS 2009). Anyone that handles desert tortoises during clearance activities must have the appropriate authorizations from the Service and the State. k. During the clearance surveys, desert tortoises in burrows may be removed through tapping or careful excavation. Multiple visits may be necessary if desert tortoises are inaccessible in deep caves or burrows. During all handling procedures, desert tortoises shall be treated in a manner to ensure that they do not overheat or exhibit signs of overheating (e.g., gaping, foaming at the mouth, etc.), or are placed in a situation where they cannot maintain surface and core temperatures necessary to their well-being. Desert tortoises shall be kept shaded at all times until it is safe to release them. Ambient air temperature shall be measured in the shade, protected from wind, at a height of2 inches (5 centimeters) above the ground surface. All clearance activities (capture, transport, release, etc.) shall occur when ambient temperatures are below 95°F {35°C) and not anticipated to rise above 95°F {35°C) before handling and processing desert tortoises are completed. l. For desert tortoises that need to be relocated out of harm's way, the tortoise should be placed out of the path of project activity as per the instructions and guidance from the authorized desert tortoise biologist. m. The area cleared and number of desert tortoises located within that area must be reported to the local Service and the appropriate State wildlife agency. The report should be made in writing, either by mail or email. Notification should be received within one week. n. For activities conducted between March 15 and November 1 in desert tortoise habitat, all activities in which encounters with tortoises might occur will be monitored by an authorized desert tortoise biologist. The biologist will be informed of tortoises relocated during preconstruction surveys so that he or she could watch for the relocated tortoises in case they attempted to return to the construction site. The authorized desert tortoise biologist will watch for tortoises wandering into the construction areas, check under vehicles, examine excavations and other potential pitfalls for entrapped animals, examine exclusion fencing, and conduct other activities to ensure that death or injuries of tortoises were minimized. o. For open trenches, earthen escape ramps will be maintained at intervals of no greater than 0.25 mile. A biological monitor will inspect all trenches, auger holes, or other excavations a minimum of twice per day, and also immediately prior to back filling. Any wildlife species located will be safely removed and relocated out of harm's way, using a suitable tool such as a pool net when applicable. For safety reasons, biological monitors will under no circumstance enter open excavations. p. No overnight hazards to desert tortoises (e.g., auger holes, pits, or other steep sided depressions) will be left unfenced or uncovered; such hazards will be eliminated each day prior to the work crew and biologist leaving the site. Plywood board will be used to cover open hazards. All excavations will be inspected for trapped desert tortoises at the beginning, middle, and end of the workday. Should a tortoise become entrapped, the authorized

Table 2.6-2. Mitigation Measures

Mitigation Measure No.	Mitigation Measure Description
	desert tortoise biologist will remove it immediately. q. If blasting is required in desert tortoise habitat, a biological monitor will be assigned to each blasting crew or area in which blasting will occur. Prior to any blast, a 200-foot area around the blast site will be surveyed for desert tortoises. Aboveground tortoises will be relocated at least 500 feet from the blast site. Tortoises in burrows within 50 feet of the blast site will be relocated at least 75 feet away from the blast site to an unoccupied existing or artificial burrow. Burrows located between 50 and 150 feet away from the blast site will be flagged and stuffed with newspaper prior to the blast. The newspaper will be removed immediately after the blast and burrows assessed for damage. r. Routine inspection and maintenance of transmission lines will be limited to the desert tortoise inactive periods of November through February and June through August. All access roads with re-established native vegetation that are used for scheduled, routine maintenance activities will be cleared by a tortoise monitor ahead of any vehicular movement. Should unscheduled, emergency maintenance become necessary, a tortoise monitor will clear the route ahead of vehicular movement. s. Any incident occurring during project activities that was considered by the biological monitor to be in non-compliance with the mitigation plan will be documented immediately by the biological monitor. The compliance manager will ensure that appropriate corrective action was taken. Corrective actions will be documented by the monitor. The following incidents will require immediate cessation of the construction activities causing the incident, including 1) imminent threat of injury or death to a desert tortoise; 2) unauthorized handling of a desert tortoise, regardless of intent; 3) operation of construction equipment or vehicles outside a project area cleared of desert tortoise, except on designated roads; and 4) conducting any construction activity without a biological monitor where one is required. If the monitor and compliance inspection manager do not agree, the BLM's compliance officer will be contacted for resolution. All parties would refer the resolution to the BLM's authorized officer. t. Worker Environmental Awareness Program. A Worker Environmental Awareness Program (WEAP) will be prepared. Construction crews and contractors associated with the SWEF or the W APA switching yard or power line will be required to participate in WEAP training prior to starting work on the project. This instruction will include specific desert tortoise training on distribution, general behavior and ecology, identification, protection measures, reporting requirements, and protections afforded by State and Federal endangered species acts. u. Parked vehicles will be inspected prior to being moved. If a tortoise is observed beneath a vehicle, the authorized desert tortoise biologist will be contacted to move the animal from harm's way, or the vehicle will not be moved until the desert tortoise left of its own accord. The authorized desert tortoise biologist will be responsible for taking appropriate measures to ensure that any desert tortoise moved in this manner is not exposed to temperature extremes that could be harmful to the animal. v. Should any desert tortoise be injured or killed, all activities will be halted, and the compliance inspection manager and/or authorized desert tortoise biologist immediately contacted. The compliance inspection manager and/or authorized desert tortoise biologist will be responsible for reporting the incident to the authorizing agencies. w. A report to the Service will be produced reporting all tortoises seen, injured, killed, excavated, or handled. GPS

Table 2.6-2. Mitigation Measures

Mitigation Measure No.	Mitigation Measure Description
	locations of live tortoises will be reported. x. The applicant will implement a Raven Management Program that will consist of: 1) an annual survey to identify raven nests on towers and any tortoise remains at tower locations; this information will be relayed to BLM so that the ravens and/or their nests in these towers would be targeted for removal, 2) SWEF making an annual or one time contribution to an overall raven reduction program in the Nevada desert, with an emphasis on raven removal in the vicinity of this project. y. BLM will hold a preconstruction meeting with Duke Energy and the compliance inspection contractor (CIC) to discuss implementation of the terms and conditions of the biological opinion. 10 Transportation Plan. The transportation plan will be implemented during construction, O&M, and reclamation. The year will be divided into three periods based on Mojave desert tortoise activity levels as follows: a. High activity period – April 1st to May 31st and September 1st to October 31st b. Moderate activity period – March 1st to March 31st and June 1st to August 31st c. Low activity period – November 1st to February 28th or 29th During the high activity periods, a speed limit of 15 miles per hour will be maintained on all roads related to access for construction, post-construction (i.e., operation), and restoration. One biological monitor will travel in front of each piece of construction, post-construction, and restoration equipment and other construction-related vehicles entering and exiting the construction areas. If possible, construction, post-construction, and restoration equipment will be grouped while being escorted by a biological monitor entering and exiting the construction areas. Vans, busses, or carpooling will be employed to reduce the number of worker-related vehicles within the construction, post-construction, and restoration areas. These vehicles will be grouped and escorted by a biological monitor entering and exiting the construction, post-construction, and restoration area. During the moderate activity period of March 1 to March 31, low activity measures (see below) will be in effect until the temperature exceeds 68°F for three consecutive days or a tortoise is observed. If a tortoise is observed or the temperature exceeds 68°F for three consecutive days, minimization measures for the high activity period will take effect unless the weather forecast for the next day is for the temperature to drop below 68°F. During the moderate activity period of June 1 to August 31, high activity measures will be in effect until the temperature exceeds 95°F. After the temperature exceeds 95°F, minimization measures for the low activity period will take effect. During the low activity periods, a speed limit of 20 miles per hour will be maintained on all roads related to access for construction, post-construction, and restoration. Construction, post-construction, and restoration equipment entering and exiting a construction site will not need to be escorted by a biological monitor. Vans, busses, or carpooling will be optional to reduce the number of worker-related vehicles within the construction, post-construction, and restoration areas. Vans, busses, or carpooling will still be recommended to reduce the number of worker-related vehicles in construction areas. 11 Remuneration Fees. BLM will ensure payment by the project proponent of remuneration fees (see Tetra Tech 2012 for more details).

Table 2.6-2. Mitigation Measures

Mitigation Measure No.	Mitigation Measure Description
MM BIO-4: TERRESTRIAL WILDLIFE PLAN	A Terrestrial Wildlife Plan has been prepared for the proposed project (Appendix B-3: Terrestrial Wildlife Plan). This Terrestrial Wildlife Plan includes a risk assessment and mitigation measures for the banded Gila monster, chuckwalla, and bighorn sheep. Mitigation in this plan shall be implemented to reduce impacts on chuckwalla and Gila monster. Mitigation measures in the plan include the following: • As part of the WEAP identified under the Biological Opinion Desert Tortoise Measure t, construction site personnel will be given a packet, which includes NDOW's Gila Monster Status, Identification and Reporting Protocol for Observations (NDOW 2007). The packet will also contain information describing the distinguishing features of a banded Gila monster and instructions on distinguishing a banded Gila monster from chuckwallas and banded geckos, as well as information on the protection status of the species and the consequences of a potential bite. • All sightings of banded Gila monster and circumstances under which it was encountered, will be immediately reported to NDOW using the Gila Monster Reporting Form. Gila Monsters found dead will be preserved in a freezer-safe container or plastic bag and delivered to NDOW as soon as is feasible. When handling dead Gila monsters, hands shall be kept clear of the lizard's mouth to avoid a reflex-induced, painful and venomous bite. • Upon finding a Gila monster, all construction activities will be halted in the immediate vicinity of the animal until the animal moves to safety of its own accord, undisturbed. • During construction activities, qualified on-site biologists conducting desert tortoise monitoring will also monitor for chuckwalla and direct construction workers to allow the animal to move to safety of its own accord, undisturbed. • If construction occurs during the nesting period, on-site desert tortoise monitors will investigate potential chuckwalla nesting habitat (sandy, well-drained soils) in July and August for signs of nests. These areas will be marked as sensitive areas and avoided to the extent practicable during construction to avoid disturbing eggs. • Appropriate fencing will be installed around guy wire anchor points of existing met towers. • Upon finding bighorn sheep in the area proposed for construction, all construction activities will be halted in the immediate vicinity of the animal until the animal moves to safety of its own accord, undisturbed. If sheep do not move within two hours from areas proposed for construction, Pat Cummings at NDOW (702-486-5127 x3212) will be contacted to determine the appropriate measures to encourage sheep to move from the construction area.
MM BIO-5: BIRD AND BAT CONSERVATION STRATEGY	A Bird and Bat Conservation Strategy (formerly called an Avian and Bat Protection Plan [ABPP]) has been developed for the Proposed Project (Appendix B-4: Bird and Bat Conservation Strategy). The BBCS includes a risk assessment and provides for pre-construction surveys (immediately prior to construction as described in APM-13), post-construction monitoring, and adaptive management measures. The intention is not to predict the number of fatalities due to turbine collision as pre-construction data poorly predicts fatalities for birds (Ferrer et al. 2012), but to determine if any species is at high risk to inform post-construction fatality monitoring. The BBSC also includes monitoring requirements and provisions for adaptive management measures based on mortality rates. The final BBCS is included in Appendix B-4: Bird and Bat Conservation Strategy.
MM BIO-6: BURROWING OWL PROTECTION DURING CONSTRUCTION	For burrowing owls, biological monitors will use USFWS survey methods and mitigation measures presented in Protecting Burrowing Owls at Construction Sites in Nevada's Mojave Desert Region (USFWS no date specified).

Table 2.6-2. Mitigation Measures

Mitigation Measure No.	Mitigation Measure Description
MM BIO-7: TRANSMISSION LINE DESIGN	All overhead power lines will be designed using the Suggested practices for Avian Protection on Power Lines: State of the Art in 2006 manual and Mitigating Bird Collisions with Power Lines: The State of the Art in 1994.
MM BIO-8: WILDLIFE WATER DEVELOPMENTS	If construction and operations effect the water developments directly, the applicant would compensate NDOW to relocate the water development inclusive of any administrative clearances (i.e. NEPA, Cultural) required by the BLM.
4.5 Cultural Resources	
MM CR-1: ARCHAEOLOGICAL MONITOR	An archaeological monitor will be required during access road construction, widening of existing roads, and any other ground-disturbing activities in order to protect known or unidentified cultural resources from project impacts.
MM-CR 2: ETHNOGRAPHIC/ETHNOHISTORIC STUDY	An ethnographic/ethnohistoric study will be conducted to better understand the relationship of Native peoples to the cultural landscape in this region.
MM CR 3: DEVELOPMENT OF A MEMORANDOM OF AGREEMENT	Development of a Memorandum of Agreement would outline the roles and responsibilities of the affected parties. The Project Proponent would be required to fund an interpretive kiosk to be placed along Cottonwood Road (Highway 163) and an interpretive brochure on the history of the New Era Mine and its illustrious owner Sam Yet. The interpretive materials will be prepared by the BLM in partnership with the Lake Mead National Recreation Area. The MOA would also include an ethnographic/ethnohistoric study of the Searchlight Wing Energy Project region. The Memorandum of Agreement would need to be completed prior to the signing of the Record of Decision for this EIS. The mitigation measures would need to be completed prior to a BLM Notice to Proceed for project construction is authorized.
4.6 Air Quality and Climate	
MM AIR-1: SECURE ALL VEHICLES HAULING LOOSE MATERIALS.	The Applicant will cover all trucks hauling soil, sand, and other loose materials or require all trucks to maintain at least 2 feet of freeboard, which is the distance from the top of the truck bed in the material being hauled.
MM AIR-2: REDUCE VEHICLE EMISSIONS.	The Applicant will turn off idling equipment when not in use.
MM AIR-3: PROHIBIT EQUIPMENT TAMPERING	The Applicant will prohibit any tampering with engines to increase horsepower, and require continuing adherence to manufacturer's recommendations.
MM AIR-4: LEASE NEW EQUIPMENT.	If practicable, the Applicant will lease new, clean equipment that meet the most stringent of applicable federal or state standards.
MM AIR-5: USE LOW SULFUR FUELS.	The Applicant will use and require contractors to use low-sulfur diesel fuel (45 ppm) for vehicles and equipment, if available.
MM AIR-6: AVOID SENSITIVE AIR QUALITY RECEPTORS.	The Applicant will locate diesel engines, motors, and equipment as far as possible from possible sensitive receptors.

Table 2.6-2. Mitigation Measures

Mitigation Measure No.	Mitigation Measure Description
MM AIR-7: MITIGATION OF GHG EMISSIONS.	The Proposed Action would minimize greenhouse gas (GHG) emissions through the long-term generation of renewable electricity, which would provide a potential net benefit to regional air quality.
4.7 Transportation	
MM TRAN-1: TRAFFIC MANAGEMENT PLAN.	A Traffic Management Plan will be prepared for the project that identifies BMPs to minimize construction-related traffic impacts. Specifically, the BMPs would ensure an adequate flow of traffic in both directions by providing sufficient signage to alert drivers of construction zones, notifying emergency responders prior to construction, conducting community outreach, and controlling traffic around affected intersections. The Plan will include the following: • Consideration of the turbine manufacturer-provided dimensions and weight; maximum axle loads; and local regulations. • Obtaining requisite transportation permits. • Providing escort for components as required by the length, weight, or width. • To further reduce effects to the US-95/Cottonwood Cove Road intersection, the Plan will identify an alternate access route to the Proposed Project site during peak construction if possible. • Truck traffic will be phased throughout construction. • Truck traffic will be restricted to the roadways developed or upgraded for the Proposed Project. • Existing unimproved roads not associated with the Proposed Project would be used in emergency situations only. • Deliveries of materials will be scheduled for off-peak hours to reduce effects during periods of peak traffic. Truck traffic will use designated truck routes when arriving to and departing from the proposed work sites. • Providing alternate transportation routes should temporary road closures be required. • The Applicant will encourage the construction workforce to carpool or vanpool. • Signs and public notices regarding construction work will be distributed before disruptions occur and will identify detours to maintain access. • To minimize the effects on local and Lake Mead traffic the Transportation Plan will mandate the use of flagmen or escort vehicles to control and direct traffic flow, and provide schedules that show roadway work will be done during periods of minimum traffic flow. • Ongoing ground transportation planning will be conducted to evaluate road use, minimize traffic volume, and ensure that roads are maintained adequately to minimize associated impacts.
MM TRAN-2: REPAIR DAMAGED STREETS.	Before construction, the Applicant, a BLM representative, and a local representative will document the condition of the access route, noting any preconstruction damage. After construction, any damage to public roads will be repaired to the road's preconstruction condition, as determined by the local representative and BLM.
4.8 Land Use - No additional mitigation measures are proposed or required	

Table 2.6-2. Mitigation Measures

Mitigation Measure No.	Mitigation Measure Description
4.9 Visual Resources	
MM VIS-1: MINIMIZE SURFACE DISTURBANCE.	Operators will reduce visual impacts during construction by clearly delineating construction boundaries and minimizing areas of surface disturbance; preserving vegetation to the greatest extent possible; using undulating surface disturbance edges; stripping, salvaging, and replacing topsoil; using contoured grading; controlling erosion; using dust suppression techniques; and restoring exposed soils as closely as possible to their original contour and vegetation.
MM VIS-2: SELECT BLM-APPROVED FLAT TONE COLORS FOR STRUCTURES	All structures (including Western's proposed switching station) will be constructed of materials that restrict glare and will be finished with a BLM-approved Standard Environmental Color intended to blend with the surrounding environment. Due to the height of the WTGs and the oscillating motion of the blades, it is difficult to make the towers blend into the landscape; however, a flat gray paint color will tone down the usual white design and reduce glare. Any color other than white will need to be approved by the FAA. If a color is not easily distinguishable for pilots, daytime strobe lights will be needed, thus negating the mitigation (FAA 2007).
MM VIS-3: MINIMIZE PROFILES OF SITE DESIGN ELEMENTS	Site design elements will be integrated with the surrounding landscape, such as minimizing the profile of the ancillary structures, burial of cables, and use of timed, motion-sensor, and directional lighting.
MM VIS-4: MINIMIZE ROAD AND GRAVEL CONTRAST	The colors of the asphalt and gravel used for circulation and parking areas at the O&M building will be selected to minimize contrast with the site's soil colors. Roads will be contoured to blend into the existing topography.
MM VIS-5: MINIMIZE LIGHTING	Efforts will be made to minimize the need for and amount of lighting on ancillary structures. • When possible, lighting will be associated with motion sensors to minimize constant lighting effects. • The only exterior lighting on the WTGs will be the aviation warning lighting required by the FAA. The warning lighting will be the minimum required intensity to meet the current FAA standards. • Outdoor night lighting at the O&M facility or other ancillary structures will be the minimum necessary for safety and security. All lights will be shielded to reduce offsite light pollution. Motion sensor lighter will be used when possible. Bluish lighting will be avoided and warm white or amber lighting will be used instead for general security and human vision needs. Facility lighting should be less than Kelvin color temperature (warm white or amber in color). Lighting will have screens that do not allow the bulb to shine up or out. All lighting fixtures shall be hooded and shielded, face downward, located within soffits, and directed on to the pertinent site only, and away from adjacent parcels or areas. All proposed lighting shall be located to avoid light pollution onto any adjacent lands as viewed from a distance.
4.10 Noise	
MM NOI-1: CONDUCT CONSTRUCTION ACTIVITIES DURING DAYTIME HOURS.	The Applicant will conduct construction activity only during daytime hours at the property boundary closest to the nearest residence(s). Construction activities (including truck deliveries, pile driving, and vibration equipment use) shall be restricted to the least noise-sensitive times of day-weekday daytime hours between 7:00 a.m. and 10:00 p.m., near residential or recreational areas. Blasting activities would be further limited to between the hours of 7:00 a.m. and 5:00 p.m. during weekdays only. Restrictions on air braking, down shift braking, stopping or staging in Searchlight will be enforced in compliance with the local traffic laws and the Traffic Control Plan that will be prepared by the construction contractor for review and approval by Nevada Department of Transportation (NDOT).

Table 2.6-2. Mitigation Measures

Mitigation Measure No.	Mitigation Measure Description
MM NOI-2: TURN OFF IDLING EQUIPMENT.	The Applicant will turn off idling equipment when not in use.
MM NOI-3: NOTIFY ADJACENT RESIDENCES.	The Applicant will notify adjacent residents in advance of construction work through public mailings and signs directed toward residents, landowners, and recreational users within 1 mile of the site prior to construction. The notice will state specifically where and when construction activities will occur in the area. The Applicant will also provide a communication line or procedures to enable individuals to contact the contractor in the event that construction noise levels affect them.. The Applicant will use an audible warning system to notify public of pending blasting activities.
MM NOI-4: INSTALL ACOUSTIC BARRIERS.	The Applicant will install acoustic barriers around stationary construction noise sources as necessary to maintain a noise level not to exceed 43 dBA at the property boundary closest to the nearest residence.
MM NOI-5: PROPER MAINTENANCE AND WORKING ORDER OF EQUIPMENT AND VEHICLES.	Construction equipment will be maintained according to manufacturers' recommendations. The Applicant will ensure that all equipment is adequately muffled and maintained, to include: • Use of noise controls on standard construction equipment and shielding on impact tools; • Use of broadband noise backup alarms on mobile equipment; and • Installation of mufflers on exhaust stacks of all diesel and gas-driven engines.
MM NOI-6: ENSURE PROPER INSTALLATION OF TRANSFORMER EQUIPMENT.	Construction equipment will be maintained according to manufacturers' recommendations. The Applicant will ensure that all equipment is adequately muffled and maintained, to include: • Use of noise controls on standard construction equipment and shielding on impact tools; • Use of broadband noise backup alarms on mobile equipment; and • Installation of mufflers on exhaust stacks of all diesel and gas-driven engines.
4.11 Recreation	
MM REC-1: RECREATION IMPACTS MINIMIZATION MEASURES	The Applicant and their contractor(s) shall reduce recreation impacts during construction by: • Clearly delineating construction boundaries and minimizing areas of surface disturbance; • Preserving vegetation to the greatest extent possible; • Utilizing undulating surface disturbance edges; • Stripping, salvaging and replacing topsoil; • Employing contoured grading; • Controlling erosion; • Using dust suppression techniques; • Restoring exposed soils as closely as possible to their original contour and vegetation; and • Preserving access to roads and trails in the project area that are used for recreational purposes.
4.12 Socioeconomics – No adverse effects on Socioeconomic conditions are anticipated; therefore, no mitigation measures are proposed.	
4.13 Environmental Justice – No adverse effects on environmental justice populations are anticipated; therefore, no mitigation measures are proposed.	

Table 2.6-2. Mitigation Measures

Mitigation Measure No.	Mitigation Measure Description
4.14 Human Health and Safety	
MM SAFE-1: HAZARDOUS MATERIALS MANAGEMENT.	The Applicant will implement a Hazardous Materials Handling Management Program or incorporate within their other program the item outlined below. Hazardous materials used and stored on site for the Proposed Action activities will be managed according to the specifications outlined below as follows: • Hazardous Materials Handling Program. A project-specific hazardous materials management program will be developed prior to initiation of the Proposed Action construction. The program will outline proper hazardous materials use, storage, and disposal requirements. The program will identify types of hazardous materials to be used during construction activities. All personnel will be provided with project-specific training. This program will be developed to ensure that all hazardous materials are handled in a safe and environmentally sound manner. Employees will receive hazardous materials training and will be trained in hazardous waste procedures; spill contingencies; waste minimization procedures; and treatment, storage, and disposal facility training in accordance with OSHA Hazard Communication. • Transport of Hazardous Materials. Hazardous materials that will be transported by truck include fuel (diesel fuel and gasoline) and oils and lubricants for equipment. Containers used to store hazardous materials will be properly labeled and kept in good condition. Written procedures for the transport of hazardous materials used will be established in accordance with U.S. Department of Transportation (USDOT) and NDOT regulations. A qualified transporter will be selected to comply with federal and state transportation regulations. • Fueling and Maintenance of Construction Equipment: Written procedures for fueling and maintenance of construction equipment will be prepared prior to construction. Vehicles and equipment will be refueled on site or by tanker trucks. Procedures will include the use of drop cloths made of plastic, drip pans, and trays to be placed under refilling areas to ensure that chemicals do not come into contact with the ground. Refueling stations will be located in designated areas where absorbent pads and trays will be available. The fuel tanks will also contain a lined area to ensure that accidental spills do not occur. Drip pans or other collection devices will be placed under the equipment at night to capture drips or spills. Equipment will be inspected daily for potential leakage or failures. Hazardous materials such as paints, adhesives, and solvents, will be kept in an approved locker or storage cabinet.
MM SAFE-2: CHARACTERIZE POTENTIALLY CONTAMINATED SOIL.	To ensure that workers, the public, and wildlife are not exposed to potential contaminants, if soil is unearthed that is discolored or has an odor, work will be stopped in that area. In this event, the Applicant will retain a Certified Environmental Manager approved by the State of Nevada to characterize the type and extent of potential contamination. The soil should then be sampled and characterized prior to further site excavation activities in the area with discolored or odorous soils. If the soil is found to be contaminated based on federal or state regulations, then the Applicant will implement the appropriate and relevant procedures to properly characterize, contain, and dispose of the contaminated material.
MM SAFE-3: ADHERENCE OF THE HEALTH AND SAFETY PROGRAM WITH 29 CFR, PART 1910.	The Applicant and Western will ensure that all health and safety and emergency plans required for employees and contractors during construction, operations, and decommissioning of the Proposed Action will comply with the OSHA Standards provided in federal regulation 29 CFR, Part 1910, as well as with applicable state and local occupational health and safety regulations.

Table 2.6-2. Mitigation Measures

Mitigation Measure No.	Mitigation Measure Description
MM SAFE-4: CONSTRUCTION FIRE PREVENTION MEASURES.	The following fire prevention measures will be implemented by the Applicants or its contractor during Proposed Project construction: • Maintain a list of all relevant firefighting authorities near the Proposed Project site. The closest resources to respond to a wildland fire threatening the town of Searchlight would come from Clark County Fire Department Rural Station 75 located in Searchlight. This fire station is staffed by volunteers. In the event of a fire on site, the Applicant will contact both BLM Fire and the Clark County Fire Department ; • Have and maintain available fire suppression equipment in all construction areas, including but not limited to water trucks, potable water pumps, and chemical fire extinguishers. Ensure an adequate supply of fire extinguishers for welding and brushing crews; • Include mechanisms for fire suppression in all heavy equipment, including fire extinguishers and spark arresters or turbo-charging (which eliminates sparks in exhaust); • Vehicle catalytic converters, on vehicles that enter and leave the project site on a regular basis, will be inspected on a regular basis and cleared of all flammable debris; • Remove any flammable wastes generated during construction on a regular basis; • Accomplish vegetation clearing in a manner that reduces vegetation and does not create a fire hazard; • Store all flammable materials used at the construction site; • Allow smoking only in designated smoking areas; • Require all work crews to park vehicles away from flammable vegetation, such as dry grass and brush. At the end of each workday, heavy equipment should be parked over mineral soil, asphalt, or concrete, where available, to reduce the chance of fire; • All cutting/welding torch use, electric-arc welding, and grinding operations shall be conducted in an area free, or mostly free, from vegetation and an ample water supply and shovel shall be on hand to extinguish any fires created from sparks. At least one person, in addition to the cutter/welder/grinder, shall be at the work site to promptly detect fires created by sparks. In the O&M area, all hot work will require a special operator permit.
MM SAFE-5: AERONAUTICAL CONSIDERATIONS.	The Applicant will notify FAA by filing FAA Form 7460 at least 30 days before construction is to begin or the date that applications for construction permit is to be filed.
MM SAFE-6: ADHERENCE OF THE HEALTH AND SAFETY PROGRAM WITH 29 CFR, PART 1926.	The Applicant will ensure that all health and safety and emergency plans required for employees and contractors during construction, operations, and decommissioning of the Proposed Action will comply with the OSHA Standards provided in federal regulation 29 CFR, Part 1926, as well as with applicable state and local occupational health and safety regulations.