CHAPTER 4 - ENVIRONMENTAL EFFECTS

This chapter evaluates the environmental consequences that would result from construction and operation of the proposed Project, under the Proposed Action (dry-cooled alternative), wet-cooled alternative, and the No Action alternative. The impact analysis for environmental consequences focuses on potential direct, indirect, and cumulative effects on resources described in Chapter 3.0 - Affected Environment. In most cases, impacts are categorized and described in general terms without reference to facility type or location.

Direct effects are impacts that are caused by the construction and operation of the proposed Project and occur at the same time and place. These effects would result from the granting of the right-of-way by the BLM and subsequent construction and operation of proposed facilities. Indirect effects are those impacts that are caused by construction and operation of the proposed Project which are later in time or farther removed in distance, but are still reasonably foreseeable. Indirect effects may include the effects of the withdrawal of groundwater, growth-inducing effects, and other effects related to induced changes in the pattern of land use, changes to the population density or growth rate, and related effects on the physical attributes of associated ecosystems.

The cumulative effects analysis is focused on the potential effects (direct and indirect) of construction, operation, and maintenance of the proposed Project combined with other past, present, and reasonably foreseeable future actions that could have effects in the ROI.

As described in Chapter 3.0, the ROI varies depending on the resource being analyzed and the predicted locations of direct and indirect impacts from construction and operation of the proposed Project.

4.1 Air Quality

To determine potential impacts of the proposed Project on air quality during construction and operations, the results of air quality investigations and modeling conducted by the Proponent at other sites in western United States were evaluated. The proposed Palen Solar Power Plant (PSPP) near Desert Center, California would use the same solar technology and encompass an area equivalent to the proposed Project site. Construction- and operation-related emissions at the PSPP site were modeled using the AERMOD model (version 07026). Criteria pollutant emissions were modeled to determine maximum air quality impacts. The maximum modeled concentrations were then added to ambient background concentration and compared to the applicable standards. For the PSPP analysis, 3 years of surface observations (2002-2004) from an airport near Blythe, California (approximately 28 miles east of the PSPP site), along with concurrent upper air data from Mercury Desert Rock Airport in Mercury, Nevada (approximately 25 miles east of the proposed Project site), were used for dispersion modeling.

4.1.1 Proposed Action

4.1.1.1 Construction Phase Inventory and Emissions

Construction of the proposed Project is expected to require 39 months. During construction, emissions will be similar to those associated with any large industrial construction project. Construction activities will be staged to provide an efficient strategy for Project construction. Construction-related air emissions will include exhaust and fugitive dust from vehicle and construction equipment, windblown fugitive dust from grading, and other soil disturbing activities and the installation of the solar panels.

Construction-related emissions would be transient in nature and may cause some unavoidable, localized short-term impacts. Since the Project surface disturbance will exceed 5 acres, a Class II Air Quality Permit for Surface Area Disturbance (SAD) will be required. The SAD permit can be a stand-alone permit if the facility began grading prior to the stationary air permit being issued, or it can be part of the stationary air permit (Phillips, personal communication, November 11, 2009).

Table 4-1 summarizes projected maximum daily emissions during construction of the Project. Table 4-2 summarizes projected maximum annual emissions from Project construction.

Table 4-1 Maximum Daily Construction Emissions

Phase of Construction	NOx (lb/day)	VOC (lb/day)	CO (lb/day)	SO2 (lb/day)	PM_{10} (lb/day)	$PM_{2.5}$ (lb/day)
Power Plant (on-site)	826	89	475	1.81	312	93
Power Plant (off-site)	327	76	815	1.32	143	35
Roadway (off-site)	72.8	6.7	36.1	0.1	11.7	4.6
Source: AECOM 2009						

Table 4-2 Maximum Annual Construction Emissions

Phase of Construction	NOx (tpy)	VOC (tpy)	CO (tpy)	SO2 (tpy)	PM_{10} (tpy)	$PM_{2.5}$ (tpy)
Power Plant (on-site)	102	11.0	58	0.22	38.4	11.4
Power Plant (off-site)	36.4	8.6	91	0.15	16.1	4.0
Source: AECOM 2009						

The exhaust emission factors used for the calculations of CO, VOC, NO_x, SO_x, and PM_{10} are model year and horsepower-based off-road emission factors for 2010, derived from the California Air Resources Board's OFFROAD2007 Model (version 2.0.1.2, December 15, 2007). The OFFROAD2007 Model calculates total daily emissions by equipment category (crane,

dozer, grader, etc.), type of fuel (diesel, gasoline, etc.), and model year within engine horsepower ranges in a geographic area. The model also calculates activity rate (total operating hours per day) within the geographic area by equipment category, fuel, model year, and horsepower range. The total daily emissions were divided by the total daily operating hours to calculate emission factors (in pounds per hour) by equipment category, fuel, model year, and horsepower range (AECOM 2009).

4.1.1.2 Operational Phase Inventory and Emissions

Criteria pollutant emissions (i.e., NO_x, SO_x, CO, VOC, PM_{10}, and $PM_{2.5}$) are expected from each power plant unit during normal facility operations. The proposed plant will include two power block units, each of which consists of:

- One 35-MMBtu/hr LPG-fired auxiliary boiler used for start up
- One 35-MMBtu/hr LPG-fired HTF heater used for freeze protection for the HTF
- One 300-Hp diesel-fired emergency fire water pump engine
- One 300-Hp diesel-fired emergency generator engine
- One two-cell wet-cooling tower
- One HTF expansion/ullage system
- Maintenance vehicles

Summaries of emission estimates are provided in the following section. The emissions were calculated for each power plant unit, and the emissions from both power plant units were combined to estimate emissions for the proposed Project.

Auxiliary Boiler Emissions

Combustion of LPG results in the emissions of NO_x, SO_x, CO, VOC, PM_{10}, and $PM_{2.5}$. The assumptions made regarding auxiliary boiler operation used as the basis for emission calculations include:

- One 35-MMBtu/hr boiler per power plant unit, a total of two identical boilers for the Project
- LPG will be the only fuel used by the boilers
- Boilers to be equipped with ultra-low-NO_x burners
- Daily operation of each boiler is limited to 15 hours per day at 25 percent load, and 2 hours per day at full load
- Annual operation of each boiler is limited to 5,000 hours per year, with a duty cycle of 10 percent at full load and 90 percent at 25 percent load
- 100 percent of the PM_{10} emissions are $PM_{2.5}$
- Maximum controlled emissions are equivalent to maximum uncontrolled emissions, because the auxiliary boilers will not utilize add-on controls

Based on maximum annual operation, the boilers will operate at an average capacity factor of 18.6 percent. The fuel will be commercial grade LPG; the typical composition would be 97.5

percent propane and 2.5 percent butane. Boiler criteria pollutant emissions for a single boiler are shown in Table 4-3.

Table 4-3 Auxiliary Boiler Criteria Pollutant Emissions

Pollutant	Average Hourly Emissions (AHU/AHC) (lb/hr)	Maximum Hourly Emissions (MHU/MHC) (lb/hr)	Maximum Daily Emissions (MDU/MDC) (lb/day)	Annual Average Emissions (AA) (lb/yr)	30-Day Average Emissions (30-DA) (lb/day)
NO_x	0.07	0.39	2.24	632	2.24
VOC	0.03	0.18	1.01	284	1.01
CO	0.24	1.31	7.56	2,137	7.56
PM_{10}	0.06	0.35	2.01	569	2.01
$PM_{2.5}$	0.06	0.35	2.01	569	2.01
SO_x	0.03	0.40	2.27	283	2.27

AHU = Average hourly uncontrolled emissions
AHC = Average hourly controlled emissions
MHU = Maximum hourly uncontrolled emissions
MHC = Maximum hourly controlled emissions
MDU = Maximum daily uncontrolled emissions
MDC = Maximum daily controlled emissions
Source: AECOM 2009

HTF Heater Emissions

Combustion of commercial grade LPG results in the emissions of NOx, SOx, CO, VOC, PM_{10}, and $PM_{2.5}$. The assumptions made regarding HTF heater operation used as the basis for emission calculations include:

- One 35-MMBtu/hr HTF heater per power plant unit, a total of two identical HTF heaters for the Project
- LPG will be the only fuel used by the heaters
- Heaters will be equipped with ultra-low NO_x burners
- Operation of each heater is limited to 10 hours per day and 500 hours per year
- 100 percent of the PM_{10} emissions are $PM_{2.5}$
- Maximum uncontrolled emissions are equivalent to maximum controlled emissions, because the HTF Heaters do not have add-on controls

Based on 500 hours per year of operation at full load, the heaters will operate at an average capacity factor of 5.7 percent. The fuel will be commercial grade LPG. HTF heater criteria pollutant emissions for a single heater are shown in Table 4-4.

Table 4-4 HTF Heater Criteria Pollutant Emissions					
Pollutant	**AHU/AHC (lb/hr)**	**MHU/MHC (lb/hr)**	**MDU/MDC (lb/day)**	**AA (lb/yr)**	**30-DA (lb/day)**
NO_x	0.02	0.39	3.89	194	3.89
VOC	0.010	0.18	1.75	88	1.8
CO	0.08	1.31	13.15	657	13
PM_{10}	0.020	0.35	3.50	175	3.50
$PM_{2.5}$	0.020	0.35	3.50	175	3.50
SO_x	0.02	0.40	3.96	198	3.96
Source: AECOM 2009					

Emergency Diesel-Fired Engine Emissions

Combustion of diesel fuel results in the emissions of the criteria pollutants. The assumptions made regarding emergency engine operation used as the basis for emission calculations include:

- One 300-Hp diesel-fired fire water pump engine per power plant unit, a total of two identical fire water pump engines for the Project
- One 300-Hp diesel-fired emergency generator engines per power plant unit, a total of two emergency generator engines for the Project
- All engines will use ultra-low sulfur (15 ppm) diesel fuel
- All engines have Tier 3 Certification
- The diesel fire water pump hours for each engine are based on a single 1-hour test per week, not to exceed 50 hours per year, and do not reflect emergency use
- The diesel fire emergency generator hours for each engine are based on one 1-hour test per week, not to exceed 50 hours per year, and do not reflect emergency use
- 100 percent of the PM_{10} emissions are $PM_{2.5}$
- Maximum controlled emissions are equivalent to maximum uncontrolled emissions, because emergency engines do not have add-on controls

Emission estimates for NOx, CO, VOC, and PM_{10} are based on emission factors for EPA Tier 3 certified engines. Emission estimates for SO_x are based on estimated fuel use of 15.3 gallons per hour for each engine with a heating value of 137,000 Btu per gallon and fuel sulfur content of 15 ppm. Fire water pump engine criteria pollutant emissions are shown in Table 4-5 and the emergency generator criteria pollutant emissions are shown in Table 4-6.

Table 4-5 Fire Pump Engine Criteria Pollutant Emissions					
Pollutant	**AHU/AHC (lb/hr)**	**MHU/MHC (lb/hr)**	**MDU/MDC (lb/day)**	**AA (lb/yr)**	**30-DA (lb/day)**
NO_x	1.07E-02	1.88	1.88	94.16	1.88
VOC	5.66E-04	0.10	0.10	4.96	0.10
CO	9.81E-03	1.72	1.72	85.90	1.72
SO_x	5.66E-04	0.10	0.10	4.96	0.10
PM_{10}	5.66E-04	0.10	0.10	4.96	0.10
$PM_{2.5}$	1.89E-05	0.003	0.003	0.17	0.003
Source: AECOM 2009					

Table 4-6 Emergency Generator Engine Criteria Pollutant Emissions					
Pollutant	**AHU/AHC (lb/hr)**	**MHU/MHC (lb/hr)**	**MDU/MDC (lb/day)**	**AA (lb/yr)**	**30-DA (lb/day)**
NO_x	1.07E-02	1.88	1.88	94.16	1.88
VOC	5.66E-04	0.10	0.10	4.96	0.10
CO	9.81E-03	1.72	1.72	85.90	1.72
SO_x	5.66E-04	0.10	0.10	4.96	0.10
PM_{10}	5.66E-04	0.10	0.10	4.96	0.10
$PM_{2.5}$	1.89E-05	0.003	0.003	0.17	0.003
Source: AECOM 2009					

Cooling Tower PM_{10} Emissions

The solar power plant will utilize dry-cooling for the primary steam cycle, but will employ an auxiliary cooling tower to remove residual heat from the Balance of Plant equipment. Because cooling towers provide direct contact between the cooling water and the air passing through the tower, some of the liquid water may be entrained in the air stream and be carried out of the tower as "drift" droplets. PM_{10} is generated when the drift droplets evaporate and leave $PM_{2.5}$ formed by precipitation/crystallization of dissolved solids. Dissolved solids found in cooling tower drift can consist of mineral matter and chemicals used for corrosion inhibition.

The assumptions made regarding cooling tower operations that were used as the basis for the emission calculations include:

- One cooling tower unit per power plant unit, a total of two cooling tower units for the Project
- Circulation rate of 6,034 gallons per minute

- Cooling tower blowdown will contain a maximum of 2,000 milligrams per liter (mg/L) TDS
- Each cooling tower will be equipped with a drift eliminator with drift losses of less than or equal to 0.0005 percent by weight based on circulation flow rate
- Each cooling tower will have a maximum run time of 16 hours per day and 3,700 hours per year
- 100 percent of the PM formed is $PM_{10}/PM_{2.5}$
- Maximum controlled emissions are equivalent to maximum uncontrolled emissions, because the cooling tower drift eliminators are integral to the operation of the cooling towers and are not treated as add-on controls

PM emissions are calculated according to the method described in EPA's Compilation of Air Pollutant Emission Factors (AP-42), Section 13.4 Wet-Cooling Towers. Cooling tower PM_{10} emissions are shown in Table 4-7.

Table 4-7 Cooling Tower PM_{10} Emissions

Pollutant	AHU/AHC (lb/hr)	MHU/MHC (lb/hr)	MDU/MDC (lb/day)	AA (lb/yr)	30-DA (lb/day)
PM_{10}	0.013	0.030	0.48	111.8	0.48
$PM_{2.5}$	0.013	0.030	0.48	111.8	0.48

Source: AECOM 2009

HTF Ullage System Vent Emissions

The total uncontrolled VOC emissions from the HTF expansion/ullage tank vent were estimated based on data provided by an existing solar plant (Kramer Junction SEGS facility), extrapolated to account for HTF system size. The assumptions made regarding HTF Expansion Tank operation that were used as the basis for the emission calculations include:

- One HTF ullage system per power plant unit
- The VOC emissions are controlled with the use of two carbon adsorption canisters in series, with an overall control efficiency of 98 percent
- VOC emissions are limited to a maximum 0.75 lb/hr or 1.5 lb/day after pollution control
- The HTF ullage system are vented for a maximum of 2 hours per day
- The maximum annual operation is estimated at 400 hours per year.

The controlled and uncontrolled emissions are presented in Table 4-8. For these emission estimates, it is assumed that there will no VOC emissions from waste load out of heavy ends from the ullage system as the heavy ends are expected to have a vapor pressure that is substantially lower than the HTF fluid itself, and the vapor pressure of HTF at ambient conditions is negligible.

Table 4-8 HTF Vent VOC Emissions for One HTF Ullage System Vent							
AHU (lb/hr)	**AHC (lb/hr)**	**MHU (lb/hr)**	**MHC (lb/hr)**	**MDU (lb/day)**	**MDC (lb/day)**	**AA (lb/yr)**	**30-DA (lb/day)**
1.71	0.034	37.50	0.75	75.00	1.50	300	1.50
Source: AECOM 2009							

VOC Emissions from Bioremediation

The facility will use bioremediation in an on-site land farm to remediate HTF-contaminated soils. Bioremediation will be conducted at ambient temperatures. At ambient temperatures, the vapor pressure of the HTF is negligible; therefore, the expected VOC emissions are negligible and have not been estimated for this application.

Fugitive VOC emissions may occur in the HTF piping in the solar field from fugitive components such as pumps, seals, flanges, and valves. The fugitive VOC emissions are estimated based on component count data obtained from a recent AFC filed for a solar facility (the Beacon Solar Energy Plant), extrapolated to account for the relative difference in Project (HTF system) size. The assumptions made for the fugitive emission calculations include:

- Fugitive emissions can occur 24 hours per day, 365 days per year
- Fugitive emissions only consist of VOCs
- Maximum controlled emissions are equivalent to maximum uncontrolled emissions, because the fugitive emissions are not controlled

The fugitive pollutant emission factors were taken from the EPA 1995 Protocol for Equipment Leak Emission Estimates for Oil and Gas Production. Since the HTF has a very low vapor pressure, the values for Heavy Oil were used to estimate the emissions. The fugitive emissions are presented in Table 4-9.

Table 4-9 HTF Fugitive Emissions					
Pollutant	**AHU/AHC (lb/hr)**	**MHU/MHC (lb/hr)**	**MDU/MDC (lb/day)**	**AA (lb/yr)**	**30-DA (lb/day)**
VOC	0.18	0.18	4.38	1,598	4.38
Source: AECOM 2009					

Maintenance Vehicle Emissions

The facility will require periodic vehicle travel over the unpaved portions of the solar field to perform routine maintenance, including mirror washing, maintenance inspections and repairs of the piping network, herbicide application, and dust suppressant application. Criteria pollutant emissions are expected from the combustion of fuels in the vehicles, and fugitive PM emissions are expected from vehicle traffic on unpaved surfaces in the solar fields.

The emissions were calculated as the anticipated vehicle miles traveled multiplied by an emission factor for each pollutant. The fugitive PM_{10} and $PM_{2.5}$ emission factors take into account entrained unpaved road dust. Vehicle emissions are shown in Table 4-10.

Table 4-10 Motor Vehicle Criteria Pollutant Emissions for Travel on One Power Plant Unit

Vehicle	Average Hourly Uncontrolled Emissions (lb/hr)								
	CO	**VOC**	**NO_x**	**SO_x**	**Exhaust PM_{10}**	**Fugitive PM_{10}**	**Diesel PM**	**Exhaust $PM_{2.5}$**	**Fugitive $PM_{2.5}$**
Mirror Wash Truck	0.003	0.001	0.010	0.000	0.000	0.156	0.000	0.000	0.033
Weed Abatement	0.001	0.000	0.002	0.000	0.000	0.035	0.000	0.000	0.007
Soil Stabilizer	0.001	0.000	0.002	0.000	0.000	0.035	0.000	0.000	0.007
Water Trucks	0.001	0.000	0.004	0.000	0.000	0.064	0.000	0.000	0.013
Maintenance Vehicles	0.052	0.004	0.007	0.000	0.000	1.196	0.000	0.000	0.254
Total	**0.058**	**0.005**	**0.025**	**0.000**	**0.000**	**1.486**	**0.000**	**0.000**	**0.314**
Vehicle	**Maximum Hourly Uncontrolled Emissions/Maximum Hourly Controlled Emissions (lb/hr)**								
	CO	**VOC**	**NO_x**	**SO_x**	**Exhaust PM_{10}**	**Fugitive PM_{10}**	**Diesel PM**	**Exhaust $PM_{2.5}$**	**Fugitive $PM_{2.5}$**
Mirror Wash Truck	0.045	0.012	0.159	0.000	0.007	2.370	0.007	0.006	0.503
Weed Abatement	0.045	0.012	0.159	0.000	0.007	2.370	0.007	0.006	0.503
Soil Stabilizer	0.045	0.012	0.159	0.000	0.007	2.370	0.007	0.006	0.503
Water Trucks	0.029	0.008	0.103	0.000	0.004	1.525	0.004	0.004	0.323
Maintenance Vehicles	0.078	0.006	0.010	0.000	0.001	1.794	0.000	0.001	0.380
Total	**0.242**	**0.05**	**0.59**	**0.000**	**0.026**	**10.429**	**0.011**	**0.023**	**2.212**
Vehicle	**Maximum Daily Uncontrolled Emissions/Maximum Daily Controlled Emissions (lb/day)**								
	CO	**VOC**	**NO_x**	**SO_x**	**Exhaust PM_{10}**	**Fugitive PM_{10}**	**Diesel PM**	**Exhaust $PM_{2.5}$**	**Fugitive $PM_{2.5}$**
Mirror Wash Truck	0.357	0.094	1.276	0.001	0.055	18.961	0.055	0.051	4.020
Weed Abatement	0.357	0.094	1.276	0.001	0.055	18.961	0.055	0.051	4.020
Soil Stabilizer	0.357	0.094	1.276	0.001	0.055	18.961	0.055	0.051	4.020
Water Trucks	0.029	0.008	0.103	0.000	0.004	1.525	0.004	0.004	0.323
Maintenance Vehicles	1.255	0.094	0.157	0.002	0.010	28.699	0.000	0.009	6.085
Total	**3.996**	**.384**	**4.088**	**0.005**	**.179**	**87.107**	**.169**	**.166**	**18.468**

Table 4-10 Motor Vehicle Criteria Pollutant Emissions for Travel on One Power Plant Unit

Vehicle	Average Annual (lb/yr)								
	CO	VOC	NO_x	SO_x	Exhaust PM_{10}	Fugitive PM_{10}	Diesel PM	Exhaust $PM_{2.5}$	Fugitive $PM_{2.5}$
Mirror Wash Truck	25.7	6.8	91.9	0.1	4.0	1,365.2	4.0	3.6	289.5
Weed Abatement	5.7	1.5	20.4	0.0	0.9	303.4	0.9	0.8	64.3
Soil Stabilizer	5.7	1.5	20.4	0.0	0.9	303.4	0.9	0.8	64.3
Water Trucks	10.5	2.8	37.5	0.0	1.6	556.6	1.6	1.5	118.0
Maintenance Vehicles	458.0	34.3	57.2	0.6	3.6	10,475	0.0	3.3	2,221.1
Total	**505.6**	**46.9**	**227.4**	**0.7**	**11.0**	**13,003.6**	**7.4**	**10.0**	**2,757.2**
Vehicle	**30-Day Average (lb/day)**								
	CO	**VOC**	**NO_x**	**SO_x**	**Exhaust PM_{10}**	**Fugitive PM_{10}**	**Diesel PM**	**Exhaust $PM_{2.5}$**	**Fugitive $PM_{2.5}$**
Mirror Wash Truck	0.357	0.094	1.276	0.001	0.055	19.0	0.055	0.051	4.02
Weed Abatement	0.357	0.094	1.276	0.001	0.055	19.0	0.055	0.051	4.02
Soil Stabilizer	0.357	0.094	1.276	0.001	0.055	19.0	0.055	0.051	4.02
Water Trucks	0.029	0.008	0.103	0.000	0.004	1.5	0.004	0.004	0.32
Maintenance Vehicles	1.255	0.094	0.157	0.002	0.010	28.7	0.000	0.009	6.09
Total	**2.355**	**.384**	**4.088**	**0.005**	**1.79**	**87.2**	**.169**	**.166**	**18.47**

Source: AECOM 2009

Off-site Delivery Vehicles

Deliveries of various supplies, materials, and services to the facility will occur on a regular basis. These deliveries will result in additional truck travel on paved roads. The combustion of fuel in offsite delivery vehicle engines results in the generation of CO, VOC NO_x, SO_x, PM_{10}, and $PM_{2.5}$ emissions. Motor vehicle brake and tire wear and travel on paved roads with entrained road dust results in the generation of fugitive PM_{10} and $PM_{2.5}$ emissions. The assumptions made regarding the off-site vehicle emissions from LPG and other deliveries for the Project used as the basis for emission calculations include:

- Up to 10 miscellaneous deliveries to the facility per month (120 trips per year)
- LPG delivery is based on maximum boiler and HTF heater usage at both power plant units
- A LPG delivery truck can hold 8,000 gallons of LPG
- The LPG and other miscellaneous suppliers are located in Pahrump and Las Vegas
- The delivery trucks are heavy-duty diesel-fueled vehicles

Off-site delivery vehicle criteria pollutant emissions are shown in Table 4-11.

Table 4-11 Off-site Motor Vehicle Criteria Pollutant Emissions

Vehicle	Daily (lb/day)								
	CO	VOC	NO_x	SO_x	Exhaust PM_{10}	Fugitive PM_{10}	Diesel PM	Exhaust $PM_{2.5}$	Fugitive $PM_{2.5}$
Propane Delivery	2.74	0.72	9.79	0.01	0.42	0.30	0.42	0.39	0.06
Miscellaneous Delivery	5.48	1.45	19.58	0.02	0.84	0.61	0.84	0.78	0.11
Total	**8.22**	**2.17**	**29.37**	**0.03**	**1.26**	**0.91**	**1.26**	**1.17**	**0.17**
Vehicle	**Annual (lb/yr)**								
	CO	VOC	NO_x	SO_x	Exhaust PM_{10}	Fugitive PM_{10}	Diesel PM	Exhaust $PM_{2.5}$	Fugitive $PM_{2.5}$
Propane Delivery	556.5	146.8	1,989.0	2.2	85.6	61.5	85.6	78.8	11.7
Miscellaneous Delivery	328.6	86.7	1,174.5	1.3	50.6	36.3	50.6	46.5	6.9
Total	**885.1**	**233.5**	**3,163.5**	**3.5**	**136.2**	**97.8**	**136.2**	**125.3**	**18.6**

Source: AECOM 2009

Summary of Operational Criteria Pollutant Emissions

The total criteria pollutant emissions for the Project are summarized in Table 4-12.

Table 4-12 Summary of Project Criteria Pollutant Emissions

Emission Period (units)	Pollutant (includes stationary and mobile sources)					
	NO_x	VOC	CO	PM_{10}	$PM_{2.5}$	SO_x
AHU (lb/hr)	0.26	3.88	0.73	1.68	0.51	0.11
AHC (lb/hr)	0.26	0.53	0.73	1.68	0.51	0.11
MHU (lb/hr)	9.36	76.49	12.28	7.56	3.07	1.60
MHC (lb/hr)	9.36	2.99	12.28	7.56	3.07	1.60
MDU (lb/day)	21.32	164.86	49.93	61.64	22.88	12.47
MDC (lb/day)	21.32	17.86	49.93	61.64	22.88	12.47
AA (lb/yr)	2,256	4,607	6,437	14,745	4,498	576
30-DA (lb/day)	21.32	17.86	49.93	61.64	22.88	12.47

Source: AECOM 2009

Although new PM_{10} emissions are predicted due to operation of this Project, the solar plant could potentially reduce overall PM_{10} emissions in this region. By its nature, a solar energy project must keep dust to a minimum through the use of dust control measures, as a film of dust on the mirrors will reduce their efficiency for power production. Experience at other existing solar facilities has been that PM_{10} emissions from driving in the solar field are negligible. Dust control is achieved by a combination of watering, soil stabilizers, water from the mirror washing, and compaction of the driving surface over time. These control measures will be utilized by the proposed Project. Therefore, the emission estimates and impact analyses for PM_{10} and $PM_{2.5}$ should be considered very conservative (i.e., an over-estimate of emissions and corresponding impacts).

The proposed Project will be a minor source of criteria pollutant emissions from facility operation (e.g., emissions from auxiliary boilers and heaters, emergency generators, on-site maintenance traffic, etc.). However, controlled emissions sources would not exceed major source thresholds for any pollutant. Upon completion of final engineering design, the Proponent will consult with the NDEP – BAPC to obtain required air quality permits. The facility will require either a Class I Air Quality Operating Permit (if emissions from PM_{10}, NO_x, CO, SO_2, and VOC exceed 100 tons per year), or a Class II Air Quality Operating Permit, if emissions of these constituents are less than 100 tons per year.

4.1.2 Wet-Cooled Alternative

Impacts to air quality from construction and operation of a wet-cooled solar plant would be similar to the impacts described for the Proposed Action (dry-cooled alternative). The primary differences is the additional PM_{10} and $PM_{2.5}$ emissions from the cooling tower associated with a wet-cooled plant due to solids in the entrained moisture in the cooling tower drift. Because wet-cooling towers provide direct contact between the cooling water and the air passing through the tower, some of the liquid water may be entrained in the air stream and carried out of the tower as "drift" droplets. PM_{10} is generated when the drift droplets evaporate and leave fine particulate matter formed by precipitation/crystallization of dissolved solids. Dissolved solids found in cooling tower drift can consist of mineral matter, chemicals used in corrosion inhibition, etc. The assumptions made regarding cooling tower operation that are used as the basis of the emissions calculations for the wet-cooling alternative are as follows:

- Circulation rate of 149,000 gallons per minute;
- Cooling tower blowdown will contain a maximum of 1,600 mg/L TDS assuming 15 cycles of concentration;
- The cooling tower will be equipped with a drift eliminator with drift losses of less than or equal to 0.0005 per cent by weight based on the circulation flow rate;
- The cooling tower run time will be 16 hours per day and 3700 hours per year; and
- 100 percent of the TDS is PM_{10}/ $PM_{2.5}$ emissions.

In contrast the auxiliary cooling tower for the dry-cooled alternative will use demineralized makeup water. The assumptions made regarding auxiliary cooling tower operation that are used as the basis of the emissions calculations for the dry-cooling alternative are as follows:

- One auxiliary cooling tower per power unit, a total of two cooling towers per project site,
- Circulation rate of 6,034 gallons per minute;
- Cooling tower blowdown will contain a maximum of 2,000 mg/L TDS;
- The cooling tower will be equipped with a drift eliminator with drift losses of less than or equal to 0.0005 per cent by weight based on the circulation flow rate;
- The cooling tower run time will be 16 hours per day and 3700 hours per year; and
- 100 percent of the TDS is PM_{10}/ $PM_{2.5}$ emissions.

Table 4-13 Comparison of Cooling Tower PM_{10} Emissions

	Wet-Cooled Alternative			Dry-Cooled Alternative		
Pollutant	**Hourly (lb/hr)**	**Daily (lb/day)**	**Annual (tpy)**	**Hourly (lb/hr)**	**Daily (lb/day)**	**Annual (tpy)**
PM_{10}	0.013	0.48	0.0559	0.60	9.55	1.74
$PM_{2.5}$	0.013	0.48	0.0559	0.60	9.55	1.74

4.1.3 No Action Alternative

Under the No Action Alternative, there would be no impacts from construction and operation of the proposed Project to air quality.

4.1.4 Mitigation

No additional mitigation required at this time. Following consultation with the NDEP on the final project design, additional compliance measures may be required as part of their permit and approval process.

4.2 Geological Hazards and Mineral Resources

This section describes and evaluates the impacts that geological hazards may have on the Proposed Action. This section also describes and evaluates the potential impacts on mineral resources that may result from the Proposed Action.

4.2.1 Proposed Action

4.2.1.1 Geological Hazards

The potential for earthquakes and ground subsidence in the Project area is low, but not non-existent. Ground-shaking as a result of earthquakes represents the most significant geological hazard to the Proposed Action. Earthquakes have been recorded near the Project area and can be expected to occur in the future at essentially the same magnitude and frequency that have been previously recorded. Seismicity is a measure of the ground-shaking that is likely to occur in a given area as a result of earthquakes. The construction, operation, and maintenance of the proposed Project would not directly or indirectly impact earthquakes within the Project area or alter the seismicity in the vicinity of the Project area. While the Proposed Action would not affect earthquakes or seismicity in the Project area, earthquakes and the seismicity of the local area may potentially impact the proposed Project.

Quaternary faults have been mapped within the Project area (Slate et al. 1999). A fault crosses the southeastern portion of the Project area. A second fault crosses within .5-mile of the southwestern edge of the Project area. The construction, operation, and maintenance of the Proposed Action would not directly or indirectly impact Quaternary faults within the Project area.

Ground subsidence is the sinking or downward motion of the earth's surface resulting from either natural or manmade processes, such as mining, oil and gas extraction, or groundwater withdrawal (Bates and Jackson 1987). Local withdrawal of groundwater may result in ground subsidence by removing water from the pore spaces of consolidated sediments. As groundwater is removed, unoccupied pore spaces may collapse, thereby decreasing the total volume of the geological unit, which may cause the land surface to drop. Katzenstein and Bell (2005) observed 2.5 to 3.5 centimeters of ground subsidence in Amargosa Valley, which was in close proximity to areas of groundwater withdrawal.

The construction, operation, and maintenance of the proposed Project would not directly or indirectly impact ground subsidence within the Project area. The dry-cooling method as proposed will not increase the amount of groundwater being removed from the local area. As withdrawal of groundwater is the main cause of ground subsidence, it is unlikely that subsidence will continue to a degree that the facility will be damaged. Section 4.2.4 (Mitigation) lists subsidence as one of the geological factors that would be considered in the design and construction of the facility.

4.2.1.2 Unique Geological Resources

Unique geological resources will not be impacted by the proposed Project, because there are no known unique geological resources associated with the Project area. The nearest unique geological resource to the Project area is the Big Dune ACEC. As the Big Dune ACEC is approximately 4 miles from the Project area, and as there is no evidence of the Big Dune moving out of the ACEC, it is unlikely that the proposed Project will have any impacts to the Big Dune ACEC.

4.2.1.3 Mineral Resources

The primary impact issue for mineral resources is the loss of economically significant mineral resources. Two types of impact can potentially affect mineral resources:

1. Direct and permanent disturbance of the mineral-resource host rock during construction
2. Indirect and permanent disturbance due to changes in public accessibility to mineral resources

The primary cause of direct and permanent disturbance of mineral resources is ground disturbance associated with the Proposed Action, such as grading and cutting of roads and excavation for building foundations, which may damage or remove the geological units that host the mineral resources.

Given the absence of currently active mining or known mineral resources in the Project area, the potential impact to mineral resources is considered low. Nevertheless, indirect and permanent disturbance of mineral resources will be caused by the loss of mining-claim eligibility within the Project area. The mineral resource inventory found a single defunct placer mining claim within the Project area, which demonstrates past interest and the potential for future interest in placer-mineral resources within the Project area.

4.2.2 Wet-Cooled Alternative

Impacts to geological resources and mineral resources from construction and operation of a wet-cooled solar plant would be similar to the impacts described for the Proposed Action (dry-cooled alternative).

4.2.3 No Action Alternative

Under the No Action Alternative, there would be no impacts from geological hazards or Project-related impacts to mineral resources.

4.2.4 Mitigation

Impacts from geological hazards or to mineral resources are expected to be minor. Site-specific geotechnical, seismic, and soil conditions will be appropriately addressed during the design and construction of the Project. In accordance with the National Electrical Safety Code, the Proponent would design and construct the Project facilities to withstand geological hazards by taking earthquake activity, seismicity, fault locations, and ground subsidence into consideration. Therefore, geological hazards in the Project area are expected to have a minimal impact on Project facilities.

4.3 Soils

4.3.1 Proposed Action

4.3.1.1 Soil Loss

Erosion is the loss of soil through the natural action of water and wind. Construction activities may affect the rate at which water and wind erosion act on soils within the Project area, which may lead to loss of soil, damage to the Project Area, or damage to the surrounding area. By understanding how the Proposed Action will affect the soil units within the Project area, measures will be implemented to mitigate any impacts.

4.3.1.2 Water Erosion

The runoff designations for the soils affected by the construction, operation, and maintenance of the proposed Project range from negligible (Arizo) to rapid (Yermo). Soils within the Project area exhibit rapid permeability, with the exception of the moderately permeable Sanwell series. Given the climatic characteristics, low potential for precipitation, and the rarity of flooding events within the Project area, the implementation of BMPs would limit soil loss due to water erosion.

4.3.1.3 Wind Erosion

The soils within the Project area exhibit a moderate susceptibility for wind erosion. The dominant soil series within the Project area, the Yermo series, is assigned to a WEG of 5. The least extensive soil series within the Project area, the Lewdlac series, exhibits a moderate-high susceptibility to wind erosion and is assigned to a WEG of 3. Watering of active construction areas, such as grading of power blocks and cutting of roads, is expected to reduce susceptibility to wind erosion, consequentially reducing wind-blown, fugitive dust.

4.3.1.4 Farmland

Capability class is a broad classification scheme used to describe limitations of soils. All soil-mapping units within the Project area are assigned to a non-irrigated capability class of 7; whereas the Yermo and Shamock series have been assigned an irrigated capability class of 4. A capability class of 7 represents very severe limitations for vegetation growth that make a soil unsuited for cultivation; whereas a capability classification of 4 represents very severe limitations for vegetation growth that require careful management to support crops. No soil-mapping units within the Project area have been designated as prime farmland, unique farmland, or farmland of statewide importance.

4.3.2 Wet-Cooled Alternative

Impacts to soil resources from construction and operation of a wet-cooled solar plant would be similar to the impacts described below for the Proposed Action (dry-cooled alternative). However, the amount of ground disturbance would be greater as one 23-acre evaporation ponds per 242 MW power block would be required for the wet-cooled alternative.

4.3.3 No Action Alternative

Under the No Action Alternative, there would be no Project-related impacts to soil resources.

4.3.4 Mitigation

Proper mitigation measures would be required during construction of the proposed Project in order to avoid or minimize damage resulting from erosion, prevent acceleration of natural-erosion processes, and reduce the creation of fugitive dust that may affect both the Project and surrounding area. Temporary mitigation measures will be implemented during Project construction and then replaced with permanent measures upon completion of the proposed Project. Permanent mitigation measures will be maintained throughout the lifespan of the proposed Project. These mitigation measures are detailed in Appendix A.

4.4 Water Resources

For both the wet- or dry-cooled alternatives, the Proponent would either lease or purchase existing certified water rights for water needs during construction and operation of the proposed Project. Water rights would be acquired from existing water right owner(s), as no new appropriations are granted by NDWR due to Order 1197.

As described in Chapter 3.4, GeoTrans, Inc. was contracted to develop a groundwater flow model and hydrographic analysis to compare how historic and future pumping (up to 200 years) in the Amargosa Desert Hydrographic Basin, coupled with conversion of 400 afy of water rights from agricultural use to industrial use, would affect water levels in Devils Hole.

A numerical groundwater flow model was used to evaluate the potential regional effects to water resources associated with the proposed groundwater development included in the Proposed Action (400 afy). The groundwater report is provided in Appendix B.

Scenario 1 (No Action) Results

For Scenario 1 (No Action), 2003 pumping and return flow was repeated every year for the next 200 years to determine the change in water levels at Devils Hole. The model results show that drawdown is predicted to be more than 5 foot over a large area. However, the drawdown is predicted to decrease rapidly in the Ash Meadows discharge area. The drawdown is buffered by the reduction in spring discharge that occurs with declines in water level.

Simulated water levels in Devils Hole after 200 years of pumping, show a decline of over 13 feet due to existing pumping in the Amargosa Desert Hydrographic Basin. “Time zero” is assumed to be the simulated water-level elevation on December 31, 2003 from the model, not pre-development conditions.

Scenario 2 (Proposed Action) Results

For the Proposed Action, the 400 afy of groundwater withdrawal was divided between the three Project wells. Pumping from these three wells is assumed to start in 2010 and concludes in 2039 since the Project life is expected to be 30 years. Table 4-14 shows the proportion of pumping between the three wells. All wells were pumped from Layer 1 in the model since Layer 1 was thicker than the depth of any of the three wells.

Table 4-14 Proposed Groundwater Withdrawal from Project Wells

App. No.	Easting (m)	Northing (m)	Duty (afy)	Proposed w/d (afy)	Model Right-of-Way	Model Column	Model Layer
15702	542358.48	4045750.11	175	53	116	71	1
15893	542362.42	4044948.68	603	183	116	71	1
43873	542762.50	4044550.36	545.38	164	117	71	1

An additional 400 afy of pumping reduces simulated water levels at Devils Hole by less than 0.05 of a foot or 0.6 of an inch after 200 years. It is important to keep in mind that this reduction in water levels is approximately 30 percent higher due to the model overpredicting water level declines at Devils Hole historically. The DVRFS model calibration to hydraulic head change is also not accurate to 0.05 feet. The DVRFS model report considers the model fit to hydraulic heads to be good if the difference between simulated and observed hydraulic heads is less than 10 meters (Belcher, 2004). Also, the DVRFS model is not designed to exactly measure drawdown at a spring location several miles away, such as Devils Hole, because of its 1) grid size [1,500 meters x 1,500 meters], 2) emphasis on calibration to regional groundwater conditions, 3) estimates in historic pumping dataset, and 4) simplification of geology. Thus, the regional model has a limited capability to accurately evaluate incremental changes in pumping tens of miles away on Devils Hole; however, it is the only groundwater flow model available.

Recently, groundwater withdrawal from the three Project wells (e.g., from 2005 to 2007) has been reported as 1,328 afy, the full duty. The Project withdrawal of 400 afy should result in a minimal effect on Devils Hole water levels, in addition to the existing pumping in the basin. The water rights owners will use 928 afy for agriculture and 400 afy will be used for the Project. There will be a small difference between conversions from an agricultural to industrial beneficial use; however, it is impossible to quantify how much recharge, if any, will be derived from mirror washing. Studies have been performed on irrigation return flow adjacent to the property (Stonestrom et al. 2003, 2007), but give a range of values for recharge from two different methods: 1) 0.1 to 0.5 meter/year (4 to 20 inches/year) from vertical profiles of water potential and environmental tracers; and 2) 9 to 22 percent of infiltrated irrigation from chloride mass-

balance estimates. The reason the model does not show zero water-level change at Devils Hole due to Project pumping is due to the USGS estimate for 2003 groundwater withdrawal from the three wells being lower than 928 afy.

Ash Meadows Discharge

The potential effects from Project pumping on discharge at Ash Meadows were also evaluated using the DVRFS model. The USGS code ZONEBUDGET was used to evaluate the changes in water movement for the Amargosa Basin. Under the present-day pumping rates, the model predicts that only minor changes to the discharge rate at Ash Meadows would have occurred by 2003, the end of the model calibration period (see Figure 10 in Appendix B). When the present-day pumping is continued into the future (No Action), the model predicts that impacts to the discharge will occur. In 2203, the discharge is predicted to be reduced from approximately 18,095 afy to 15,607 afy. When the Project pumping is added (Proposed Action), the discharge rate in 2203 is predicted to be reduced to only 15,600 afy or a negligible difference of 7 afy or 0.05 percent.

4.4.1 Proposed Action

The water needs for the proposed Project will be met by one of two options: 1) leasing and conveying groundwater from three existing wells located on private land southwest of the Project site; or 2) purchasing existing water rights from the three wells, and moving the point of diversion to the power block areas. The 3 wells under consideration have associated water rights totaling 1,323 afy. It is expected that the 3 wells will adequately serve the proposed Project (under the dry-cooled alternative) on a rotating basis without exceeding their annual pumping average. It is anticipated that 2 wells will be the primary source of water, while the third well would provide redundancy, an inherent backup water supply in the event of outages or maintenance of the other wells.

4.4.1.1 Impacts from Construction

The environmental impacts on water resources resulting from the construction of the proposed Project were analyzed by comparing the current conditions described in Chapter 3.0 to the conditions that would be expected to result from construction as described in Chapter 2.0. The direct effects of the proposed Project on water resources associated with using groundwater for construction, specifically for demands during the site grading and dust control, and operational process water needs and the effects of site grading and re-routing of washes that cross the Project were evaluated to assess the potential environmental impacts.

Construction activities are expected to take place over a period of approximately 39 months. The water to be used during construction will be from the three groundwater wells to be used for the proposed Project. Potable water will be brought in from an off-site source and held in day tanks during the term of construction. Water from groundwater during construction will be used for:

- Dust suppression during grading and along roadways as necessary

- Grading and compaction for the solar field and power block areas, infrastructure, and building foundations
- Concrete work and other uses

The majority of water use will be for grading which will be managed at a steady rate over the construction period. There are no anticipated significant peaks or troughs in the water volume required to support grading activities. Currently, construction plans are to clear and grade the site with heavy equipment to provide a uniform, gently southwesterly sloping grade and to construct drainage channels and roads. The current assumption for grading assumes no import of fill material. Due to the amount of soils and vegetation affected by grading activities, substantial water erosion control and dust control measures will be required to minimize off-site impacts. Overall, the Project will result in disturbance of approximately 4,350 acres at the Project site.

Potential impacts to water resources during construction would be primarily associated with surface disturbing activities, but could also be a result of accidental spills and handling and storage of hazardous chemicals. These chemicals can potentially contaminate surface waters during heavy storm events, or groundwater through infiltration. A number of mitigation measures are proposed to prevent spills of chemicals, as well as to respond to spills should they occur. The site-specific SWPPP will include stormwater BMPs, and temporary erosion control measures including BLM-approved dust suppression, and construction of berms and ditches, which will prevent accelerated soil erosion or dust generation. Adhering to proper material handling procedures and complying with the SWPPP would ensure that construction-related water quality impacts would not occur.

Conceptual Drainage Study

A Draft Conceptual Stormwater Control Plan for the proposed Project is provided in Appendix E. This report was prepared and submitted to the BLM in December 2008 (Slater Hanifan Group 2008). In general, the proposed solar field improvements will change the historic drainage patterns within the boundaries of the Project site. Prior to discharge from the boundaries of the Project site, it is the intent of the drainage design to maintain historic drainage patterns in both quantity and manner of flow in conformance with NRS Chapter 543 following guidelines set forth in Section 400 of the Hydrologic Criteria and Drainage Design Manual.

The site will be graded generally following the existing contours of the site in order to minimize the amount of disturbance and to allow a balanced distribution of material. Flood protection of the property from off-site flows will be provided by means of a continuous channel around the northern and western perimeter of the site. The channel will be designed to effectively intercept the 100-year storm event off-site runoff and convey the concentrated flow to the southwest corner of the property.

The southwest corner of the property has been identified as one of the historic discharge locations of the Fortymile Wash. The channel will discharge within the property limits and energy dissipation facilities will be provided in order to disperse the concentrated flow back to a shallow sheet flow condition prior to leaving the property boundary. Additionally, a channel is proposed along the eastern side of the solar field in order to intercept and collect flows impacting the site from the east. Similar to the northern and western perimeter channels, the concentrated

flow will be released on property in its historic location and an energy dissipation facility will be provided in order to return the flow to a shallow sheet flow condition prior to leaving the property. Perimeter channels are recommended to be concrete lined due to the high velocity potential and for maintenance reasons. Off-site flows will be intercepted and conveyed around the site to ensure no direct contact with on-site stormwater runoff.

Due to the size of the solar field area, the site itself has potential to generate large storm flows during a rain event. For this reason, stormwater control facilities are necessary to protect on-site facilities, and to convey stormwater runoff to historic discharge locations in both quantity and manner of flow. The four primary (major) onsite channels, traversing the site north to south, will provide 100-year event stormwater runoff interception from four equal divisions of the entire project site. The two power block areas are considered to contain the most sensitive equipment on the site and are therefore each located along one of the primary channels; thus achieving flood protection during a 100-year storm event. The stormwater runoff generated between the primary channels will be collected in a series of swales and small channels that will direct the flow to the appropriate primary channel. All minor channels within each section will be designed to intercept and convey the 25-year storm event. Stormwater runoff in areas between the primary channels and in excess of the 25-year event will sheet flow (shallow depth, low velocity) below the solar panel systems; and eventually be intercepted by an appropriate primary channel prior to impacting a power block area. This concept was selected in order to reduce costs for on-site drainage facilities, while still providing desired flood protection.

In addition to conveyance facilities, an on-site detention basin is considered necessary in order to limit post-development flows to pre-development limits. A portion of on-site storm flows will pass through the detention basin prior to off-site discharge, providing a facility for suspended particles to settle. Table 4-15 provides a summary of existing and post-development peak 100-year flow rates at historic discharge locations along the southern perimeter of the site. Locations of the existing and proposed discharge locations are shown in the Draft Conceptual Stormwater Control Plan provided in Appendix E.

Table 4-15 100-Year Storm Even Peak Flow Summary

Comparison Location (Existing/Proposed)	Existing Flow - Q_{100} (cfs)	Post-Development Flow - Q_{100} (cfs)
PT1/PT1	9,596	9,594
PT2/RPT2	129	121
PT3/789	262	133
SUB10/PT4	880	846
SUB11/SUB11	482	482

Source: Slater Hanifan Group 2009

In order to reduce impacts from off-site stormwater runoff, an alternative for Regional Flood Control Facilities was presented to the BLM and Nye County staff. The alternative would provide a regional off-site detention basin at the apex of the Fortymile Wash located north of US 95 and would effectively and considerably reduce existing condition peak storm flow downstream of US 95. Reducing off-site peak flows impacting the site allows for reduction in size of perimeter flood control facilities necessary for protection of the Project site. All properties downstream of the detention basin would benefit from this approach. The Regional Flood Control concept was presented to BLM and Nye County staff in 2009 and is currently under consideration as a viable alternative.

4.4.1.2 Operation

This section describes potential environmental impacts on water resources related to Project operations.

Water Use

Estimated water uses for the proposed dry-cooled project and the wet-cooled project alternative are summarized in Table 2-3, Summary of Operational Water Use. Water from two wells (with backup from a redundant well) will be used for the following consumptive uses:

- Solar mirror wash water to maintain solar collector efficiency
- Power cycle makeup water to supply the steam driving the steam turbine generators (this water is recycled and thus does not really constitute consumptive use)
- Equipment heat rejection for cooling generators, pumps, and other equipment
- Dust suppression
- Domestic potable uses include drinking water, showering, toilets, hand washing, etc

Estimates for water usage are based on:

- Power cycle makeup water and auxiliary equipment heat rejection – expected monthly power production rates
- Solar mirror washing – experience at other locations with similar climatic conditions
- Domestic potable use – number of employees and number of hours expected to be worked during the year; an average consumption of 37 gallons per person per day was assumed
- Dust suppression – concentrate from the water treatment process will be used for this purpose

Water Quality

Operation of the proposed Project has the potential to impact water quality through improper storage and use of materials and from soil erosion. Adhering to proper material storage and handling procedures and complying with the operation SWPPP will result in minor to no impacts to water quality. The SWPPP will identify BMPs to manage pollutant releases, including spill and leak prevention, waste handling, and employee training. Through compliance with the

General Industrial Permit, all potential pollutants generated during the industrial phase will be sufficiently mitigated such that water quality standards will not be violated. Thus, surface water and groundwater quality impacts during the operations phase would be minor.

Process and Sanitary Waste Water Management

The Project will produce one primary wastewater stream, sanitary wastewater. Sanitary wastes will be collected from the power blocks, administration building, and warehouse for treatment in several septic tanks. Septic tanks are the most common method of on-site wastewater treatment and disposal. Liquid effluent from the septic tanks will have biological oxygen demand of approximately 175 mg/L and suspended solids concentration of approximately 75 mg/L. Heavy solids will settle to the bottom of the septic tank, undergo anaerobic decomposition and slight compaction, and will be removed every 3 to 5 years.

Liquid effluent from the septic tanks will be distributed to multiple leach fields (in close proximity to the septic tanks). Based on the current estimate of 180 employees on a 24-hour, 7 day per week work schedule, a total leach field of approximately 16,500 square feet will be required. It is expected that the leach fields will satisfy the needs of the plant for its entire service life. At this time, the leach field is anticipated to be sited adjacent to the bioremediation field. However, the final location will be determined following additional engineering design. The Proponent will coordinate the development of the leach field and bioremediation facility with NDEP as part of their permitting and approval process with that agency.

There are no processes or operational wastewaters that will be connected to the septic system and leach field. The use of a septic system and associated leach field is a well established process and acceptable method of treatment and disposal when there is no local sewer system available, when the local soil and groundwater conditions are acceptable to this method, and when the chemical makeup of the wastewater is not a hazard to the local environment. The local soils are very permeable and the depth to groundwater in this area is generally approximately 135 feet below ground surface. At this depth, the soil overlying a leach field is generally considered sufficient for the biological treatment of domestic wastewater.

The power cycle makeup water will be recycled back into the process at rates between 34,500 and 52,500 gpd for each power block. Other water streams like plant drains and other miscellaneous water waste streams are collected and recycled back into the process.

4.4.2 Wet-Cooled Alternative

Under the wet-cooled alternative, the demand for water would be 4,600 afy, which is substantially more than that required for the Proposed Action (dry-cooled alternative). For both the wet- or dry-cooled alternatives, the Proponent would either lease or purchase existing certified water rights for water needs during construction and operation of the proposed Project. With either a wet- or dry-cooled option, water rights would be acquired from existing water right owner(s), as no new appropriations are granted by NDWR due to Order 1197. Groundwater flow model simulations and a hydrologic analysis have been performed for the dry-cooling option (results presented in Section 4.4.3; report provided in Appendix B). It could be assumed that the

water that would be acquired for the wet-cooled option may still be used on an annual basis by the current water rights owner(s) in the current capacity. Therefore, impacts to nearby water resources would have minimal change if the current 10-year average remains consistent throughout the Project life. The minimal change will be due to the conversion of agricultural water rights to industrial water rights, because of the reduction of return flow from irrigation.

Construction-related impacts on water resources for this alternative would be the same as the Proposed Action (dry-cooled alternative).

4.4.3 No Action Alternative

Under the No Action alternative, the proposed Project would not be constructed, and there would be no effects of construction and operation of the proposed Project on local or regional water resources. However, groundwater would continue to be pumped in the Amargosa Desert Hydrographic Basin and Death Valley regional groundwater flow system with unknown impacts to sensitive water resources area, including Devils Hole and springs and seeps in the Ash Meadows NWR.

4.4.4 Mitigation

Prior to beginning any clearing, grading, or excavation activities associated with construction of the Project, the Project owner will develop and implement an approved construction-phase SWPPP as required under the General Storm Water Construction Activity Permit, as well as implement any other Project-specific mitigation measures required by other agencies (e.g., NDEP, Nye County, USACE). The Project owner will obtain and comply with permits for construction of Project-specific water pipelines or septic system prior to construction of the plant. The Project owner will revise and reclassify well permits, if needed, with the NDWR.

Prior to commercial operation, the Project owner, as required under the General Industrial Activity Storm Water Permit, will develop and implement an operations phase SWPPP. The Project owner will submit required monitoring or compliance reports to appropriate agencies as requested.

4.5 Noise

To determine potential noise impacts of the proposed Project during the construction and daily operations of the facility, a detailed noise model was constructed to evaluate all aspects of significant noise sources on the surrounding residential community. Modeling of the Project site and surrounding environment was accomplished using Cadna (Computer Aided Noise Abatement) Ver. 3.7, which is a model-based computer program developed for predicting noise impacts in a wide variety of conditions. Cadna allows for the input of project information such as noise source data, barriers, structures, and topography to create a detailed CAD model, and uses the most up-to-date calculation standards to predict outdoor noise impacts to property lines and adjacent surrounding areas.

The potential significance of impacts are defined by comparing the projected related noise levels at the adjacent residential land use areas to the EPA outdoor noise guidelines of 55 dBA Ldn. If Project-related noise impacts to the adjacent residential property lines exceed the 55 dBA Ldn noise guidelines established by the EPA, then mitigation is required.

Also, noise impacts to defined outdoor work environments located within the Project site from potential noise sources, such as the power block areas, is defined by the federal OHSA hearing conservation noise exposure regulation. The regulation states that the acceptable OSHA 8-hour Time Weighted Average (TWA) noise threshold limit must not exceed 90 dBA. If an employee or service contractor is shown to be exposed to a noise level of 90 dBA for a continuous 8-hour period, then it shall be necessary to develop and implement a hearing conservation plan to protect the worker during the noise impact condition, thus, satisfying the OSHA requirement.

4.5.1 Proposed Action

4.5.1.1 Construction Noise Impacts

Throughout the construction of the proposed Project, noise impacts from the operation of construction machinery are expected. The temporary construction noise evaluation assesses the anticipated construction noise impacts to the defined property line sensitive receptor locations, and shall be compared to the EPA outdoor guidelines of 55 dBA Ldn.

The construction noise impact analysis is based on a phased construction schedule for the proposed Project which incorporates a total of three distinct construction phases. The following analysis evaluates the three construction phase scenarios and is based upon the noise emission data from the equipment manufacturer and expected operational utilization within each phase. The operation of construction equipment is defined to be conducted between the hours of 7:00 a.m. and 7:00 p.m., Monday through Friday.

The noise impact calculations assume worst-case conditions with all equipment running simultaneously. All sound pressure levels within the equipment noise emission database are standardized at a distance of 50 feet from the noise source. The noise evaluation for each phase is based on the construction equipment operating during a 12-hour time period between 7:00 a.m. and 7:00 p.m. The noise generated from the equipment operating during the daytime 12-hour time period is then incorporated into the 24-hour Ldn calculation to determine worst-case construction noise impacts to the sensitive receptor locations. The equipment percent operating use is based on typical land use development construction practices and our professional experience. The noise calculations of each phase will provide a realistic prediction of the noise impact range to be expected from typically intermittent construction equipment operations.

Phase 1 - Project Site Grading

The proposed construction equipment to be used in the Project site grading phase is summarized in Table 4-16.

Table 4-16 Project Site Grading Phase Construction Equipment and Sound Pressure Levels			
Equipment	**Quantity**	**Operation Usage Percentage for 8 Hours**	**Sound Pressure Level at 50 feet (dBA)**
Generator	2	66%	82.0
Back Hoe	2	66%	80.0
Loader	2	66%	80.0
Dump Truck	2	66%	84.0
Excavator	1	66%	85.0
Water Truck	1	66%	84.0
Bull Dozer	2	66%	85.0

The noise impacts from the Project site grading construction activities were evaluated at five worst-case sensitive receiver locations, placed within and along the Project property lines. The worst-case noise impact calculations from the Project site grading construction activities to the sensitive receivers are summarized in Table 4-17.

Table 4-17 Project Site Grading Phase Temporary Construction Noise Impacts		
Receiver	**Location**	**Construction Noise Impacts (dBA Ldn)**
1	Eastern Power Block	70.8
2	Northern Property Line	57.1
3	Eastern Property Line	53.2
4	Southern Property Line	49.9
5	Western Property Line	53.1

EPA provides a guideline for outdoor noise impacts to residential property lines of 55 dBA Ldn. The calculations show that the worst-case construction noise levels at the property lines range from 49.9 dBA Ldn at the southern property line to 57.1 dBA Ldn at the northern property line. There are no sensitive noise receptors located along the northern property line; therefore, these noise impacts are considered to be minor and no mitigation will be required for the Project site temporary grading operations. A graphical representation of the noise impacts from the Project site temporary grading activities phase are presented on Figure 4-1.

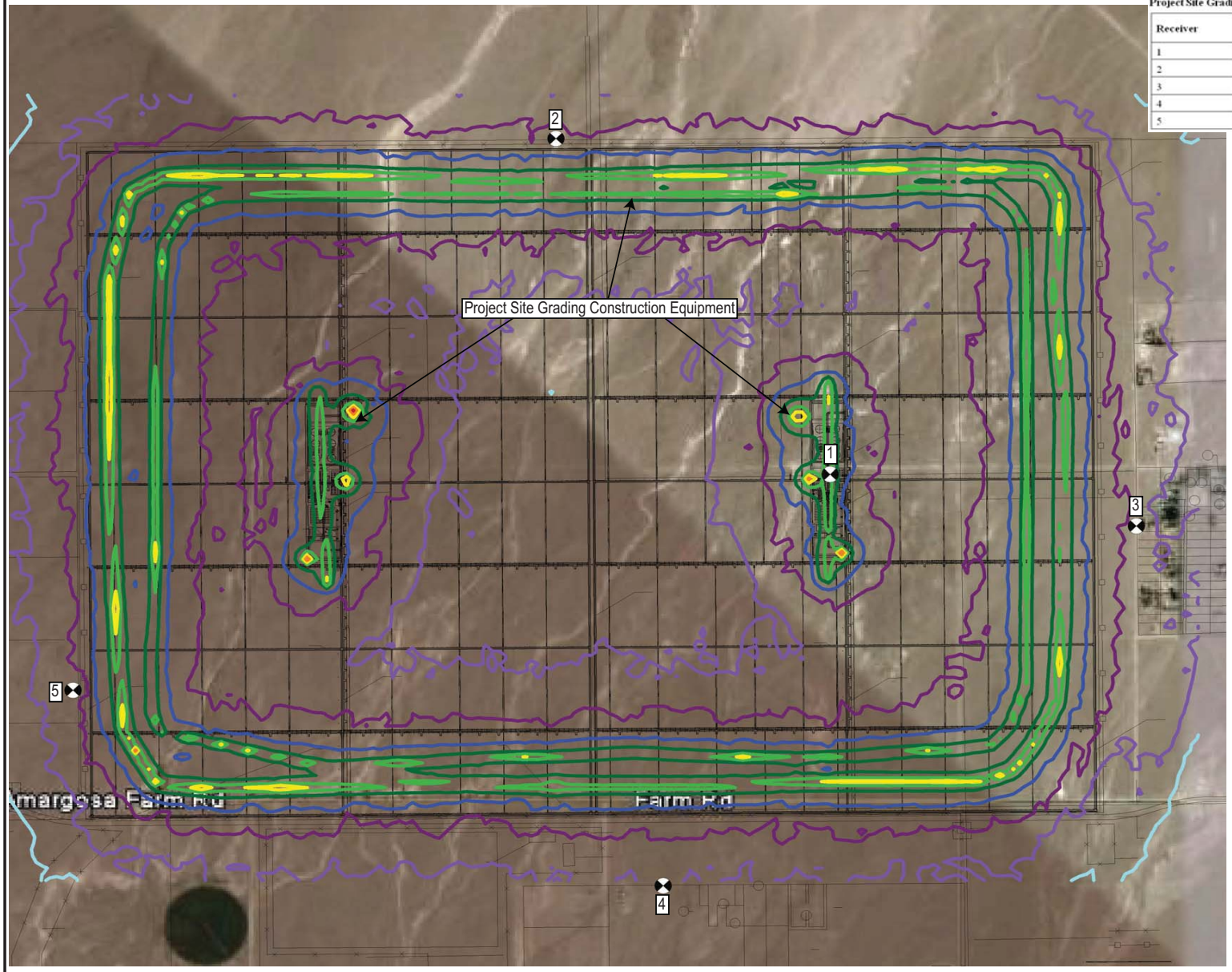

Project Site Grading Phase Temporary Construction Noise Impacts

Receiver	Location	Construction Noise Impacts (dBA Ldn)
1	Eastern Powerblock	70.8
2	Northern Property Line	57.1
3	Eastern Property Line	53.2
4	Southern Property Line	49.9
5	Western Property Line	53.1

- 40 dBA Ldn
- 45 dBA Ldn
- 50 dBA Ldn
- 55 dBA Ldn
- 60 dBA Ldn
- 65 dBA Ldn
- 70 dBA Ldn
- 75 dBA Ldn
- 80 dBA Ldn
- 85 dBA Ldn
- 90 dBA Ldn

Amargosa Farm Road Solar Energy Project
Amargosa Valley, Nevada

Aerial Image Showing Noise Impact Contours from Project Site Grading Phase Construction Operations

ARCADIS

FIGURE
4-1

Phase 2 - Roadway Access Paving and Project Structural Foundation

The proposed construction equipment to be used for the Project related roadway access paving and structural foundation phase is summarized in Table 4-18.

Table 4-18 Roadway Access Paving and Project Structural Foundation Phase Construction Equipment and Sound Pressure Levels

Equipment	Quantity	Operation Usage Percentage for 8 Hours	Sound Pressure Level at 50 feet (dBA)
Generator	2	66%	82.0
Compactor	2	66%	80.0
Concrete Truck	2	66%	85.0
Concrete Pump	2	66%	82.0
Asphalt Paver	2	66%	85.0
Roller	2	66%	85.0
Vibratory Roller	2	66%	85.0
Grader	2	66%	85.0

The noise impacts from the roadway access paving and Project structural foundation construction activities were evaluated at five worst-case sensitive receiver locations placed within and along the Project property lines. The worst-case noise impact calculations from the roadway access paving and Project structural foundation construction activities to the sensitive receivers are summarized in Table 4-19.

Table 4-19 Roadway Access Paving and Project Structural Foundation Phase Temporary Construction Noise Impacts

Receiver	Location	Construction Noise Impacts (dBA Ldn)
1	Eastern Power Block	65.5
2	Northern Property Line	54.3
3	Eastern Property Line	40.2
4	Southern Property Line	55.0
5	Western Property Line	48.3

The EPA provides a guideline for outdoor noise impacts to residential property lines of 55 dBA Ldn. The calculations show that the worst-case construction noise levels at the property lines range from 40.2 dBA Ldn at the eastern property line to 55.0 dBA Ldn at the southern property line. These noise impacts are considered to be minor and no mitigation will be required for the roadway access paving and Project structural foundation temporary construction operations. A

graphical representation of the noise impacts from the Project site grading phase construction activities are presented in Figure 4-2.

Phase 3 - Project Mechanical Equipment Installation

The proposed construction equipment to be used in the Project mechanical equipment phase is summarized in Table 4-20.

Table 4-20 Project Mechanical Equipment Installation Phase Construction Equipment and Sound Pressure Levels

Equipment	Quantity	Operation Usage Percentage for 8 Hours	Sound Pressure Level at 50 feet (dBA)
Generator	2	66%	82.0
Crane	4	66%	85.0
Forklift	4	66%	85.0

The noise impacts from the Project mechanical equipment installation construction activities were evaluated at five worst-case sensitive receiver locations placed within and along the Project property lines. The worst-case noise impact calculations from the Project mechanical equipment installation construction activities to the sensitive receivers are summarized in Table 4-21.

Table 4-21 Project Mechanical equipment Installation Phase Temporary Construction Noise Impacts

Receiver	Location	Construction Noise Impacts (dBA Ldn)
1	Eastern Power Block	65.8
2	Northern Property Line	35.3
3	Eastern Property Line	38.7
4	Southern Property Line	31.7
5	Western Property Line	38.0

The EPA provides a guideline for outdoor noise impacts to residential property lines of 55 dBA Ldn. The calculations show that the worst-case construction noise levels at the property lines range from 31.7 dBA Ldn at the southern property line to 38.7 dBA Ldn at the eastern property line. These noise impacts are considered to be minor and no mitigation will be required for the Project mechanical equipment installation temporary construction operations. A graphical representation of the noise impacts from the Project site grading phase construction activities are presented in Figure 4-3.

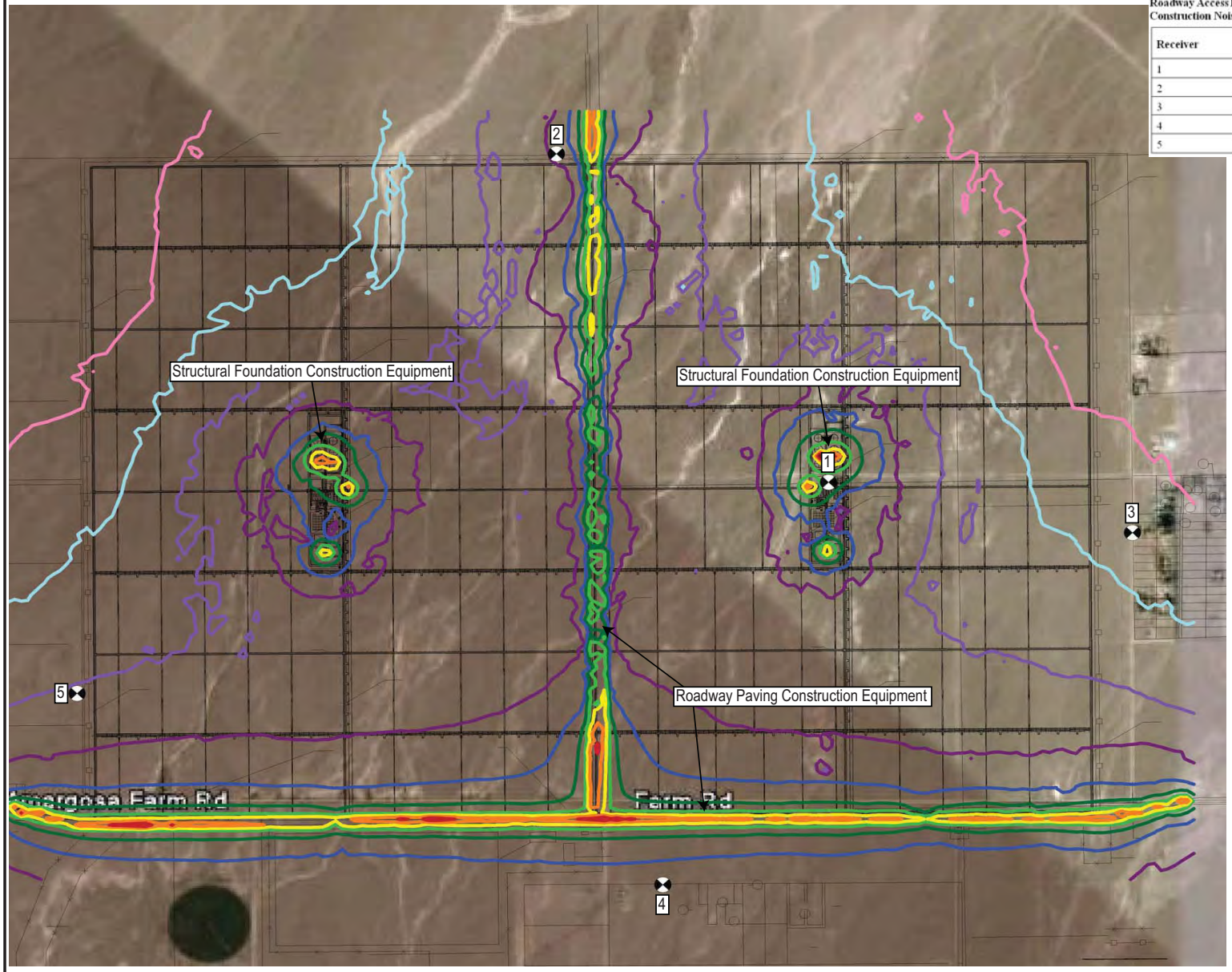

Roadway Access Paving and Project Structural Foundation Phase Temporary Construction Noise Impacts

Receiver	Location	Construction Noise Impacts (dBA Ldn)
1	Eastern Powerblock	65.5
2	Northern Property Line	54.3
3	Eastern Property Line	40.2
4	Southern Property Line	55.0
5	Western Property Line	48.3

- 40 dBA Ldn
- 45 dBA Ldn
- 50 dBA Ldn
- 55 dBA Ldn
- 60 dBA Ldn
- 65 dBA Ldn
- 70 dBA Ldn
- 75 dBA Ldn
- 80 dBA Ldn
- 85 dBA Ldn
- 90 dBA Ldn

Amargosa Farm Road Solar Energy Project
Amargosa Valley, Nevada

Aerial Image Showing Noise Impact Contours from the Roadway Access Paving and Project Structural Foundation Phase Construction Operations

ARCADIS

FIGURE
4-2

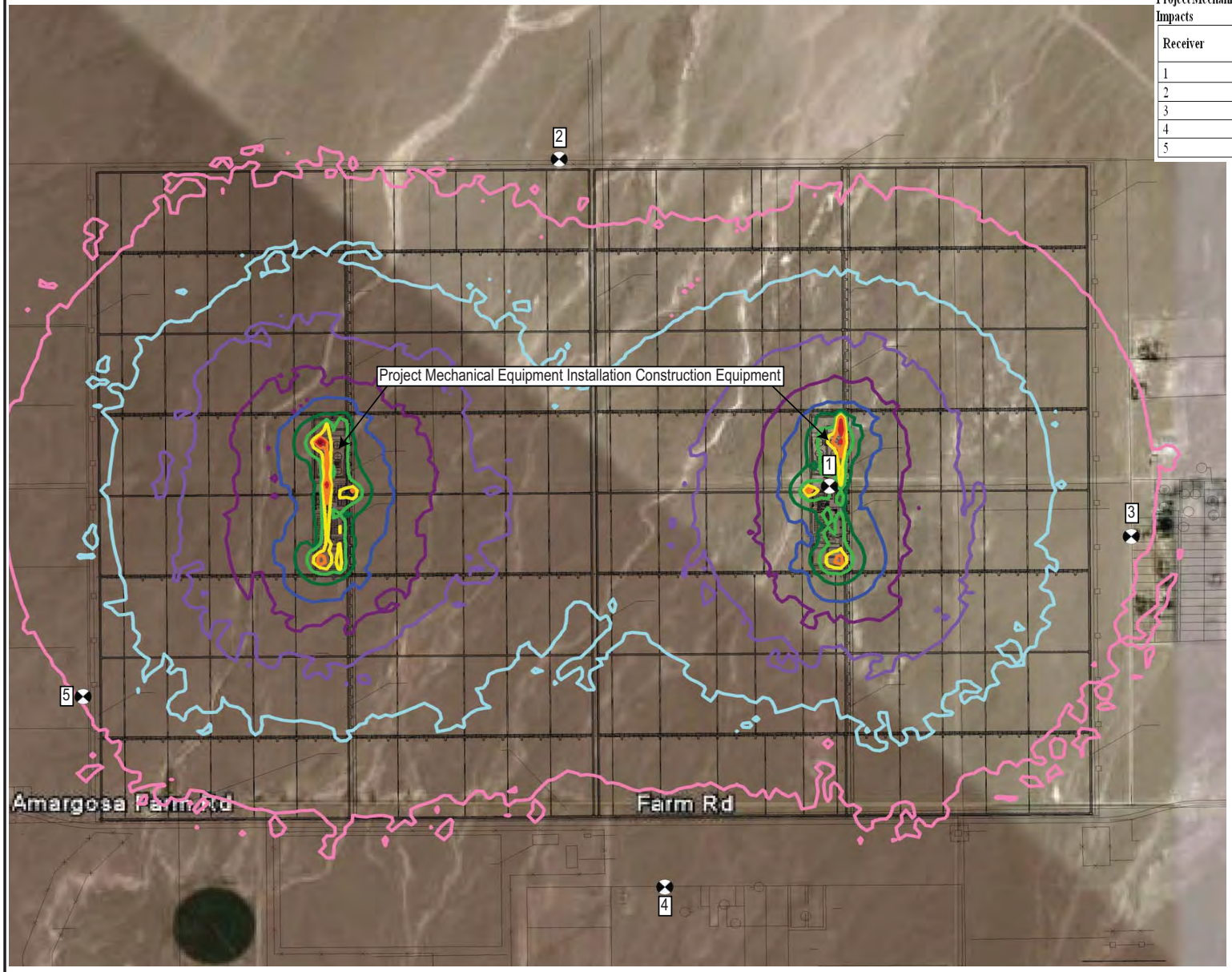

Project Mechanical Equipment Installation Phase Temporary Construction Noise Impacts

Receiver	Location	Construction Noise Impacts (dBA Ldn)
1	Eastern Powerblock	65.8
2	Northern Property Line	35.3
3	Eastern Property Line	38.7
4	Southern Property Line	31.7
5	Western Property Line	38.0

40 dBA Ldn
45 dBA Ldn
50 dBA Ldn
55 dBA Ldn
60 dBA Ldn
65 dBA Ldn
70 dBA Ldn
75 dBA Ldn
80 dBA Ldn
85 dBA Ldn
90 dBA Ldn

Amargosa Farm Road Solar Energy Project
Amargosa Valley, Nevada

Aerial Image Showing Noise Impact Contours from the Project Mechanical Equipment Installation Phase Construction Operations

ARCADIS

FIGURE
4-3

4.5.1.2 Operational Noise Impacts

The operational activities of the proposed Project were evaluated to determine the worst-case daily operational noise impacts to the defined sensitive receptors. This evaluation will determine if the daily operational noise impacts will exceed the EPA guidelines.

The proposed Project would operate continuously for 24 hours a day, 7 days a week; however, power generation noise would occur primarily during daytime hours, when the sun's energy is utilized in the power-generating process. The primary noise sources of a typical solar thermal power plant is centered around the power block area, where the steam turbine generator, air-cooled condenser, and other noise generating pump equipment are located.

Operation of the Project would generate an increase in vehicular traffic on local roads and area highways in the vicinity of the Project site. According to the Palen Noise Impact Report, dated August 2009, it is shown that an estimated 536 average daily traffic trip volume would be generated by the employees needed for the service and operation of the proposed Project. Employee and service vehicle access to the Project site would use US 95, then diverted to use the proposed T&T remote access roadway. Table 4-22 summarizes the proposed equipment and associated noise emission levels.

Table 4-22 Summary of Equipment Noise Levels

Quantity	Equipment Description	Manufacturer	Daytime Occurrences	Nighttime Occurrences	Sound Level Distance (meter)	Noise Level (dBA)
4	Demineralized Water Pump	N/A	100%	25%	1	92.0
4	Fire Protection Pump	N/A	100%	25%	1	92.0
8	Service Water Pump	N/A	100%	25%	1	92.0
6	Condensate Pump	N/A	100%	25%	1	92.0
4	Cooling Tower	N/A	100%	25%	1	85.0
4	Auxiliary Cooling Water Pump	N/A	100%	25%	1	92.0
4	Closed Cooling Water Pump	N/A	100%	25%	1	92.0
2	Emergency Diesel Generator	N/A	100%	25%	1	85.0
2	Generator	N/A	100%	25%	1	85.0
2	Generator Setup Transformer	N/A	100%	25%	1	108.0
2	Feedwater Pump	N/A	100%	25%	1	92.0

Table 4-22 Summary of Equipment Noise Levels						
Quantity	**Equipment Description**	**Manufacturer**	**Daytime Occurrences**	**Nighttime Occurrences**	**Sound Level Distance (meter)**	**Noise Level (dBA)**
4	Freezer Protection Pump	N/A	100%	25%	1	92.0
20	HTF Pump	N/A	100%	25%	1	92.3
6	Overflow Return Pump	N/A	100%	25%	1	92.0
2	Air Cooled Condenser	N/A	100%	25%	1	122.0
2	Auxiliary Boiler	N/A	100%	25%	1	102.0
8	Steam Generator	N/A	100%	25%	1	85.0
2	Steam Turbine	N/A	100%	25%	1	85.0

The combined mechanical equipment noise impacts from the proposed solar energy Project were evaluated at five strategically placed worst-case receivers located within and along the Project property lines. Table 4-23 shows the calculated operational mechanical noise impacts at these five worst-case receiver locations.

Table 4-23 Noise Impacts to the Surrounding Area from the Project Operations		
Receiver	**Location**	**Operational Noise Impacts (dBA Ldn)**
1	Eastern Power Block	80.5
2	Northern Property Line	39.1
3	Eastern Property Line	54.7
4	Southern Property Line	50.0
5	Western Property Line	54.7

Calculations show that the noise impacts from the solar facility's daily operations would range from 39.1 dBA Ldn at the northern property line to 54.7 dBA Ldn at the eastern property line. The noise impacts associated with the Project's operational activities are shown to be minor and no mitigation will be required. A graphical representation of the noise impacts from the Project's combined daily operations are presented on Figure 4-4.

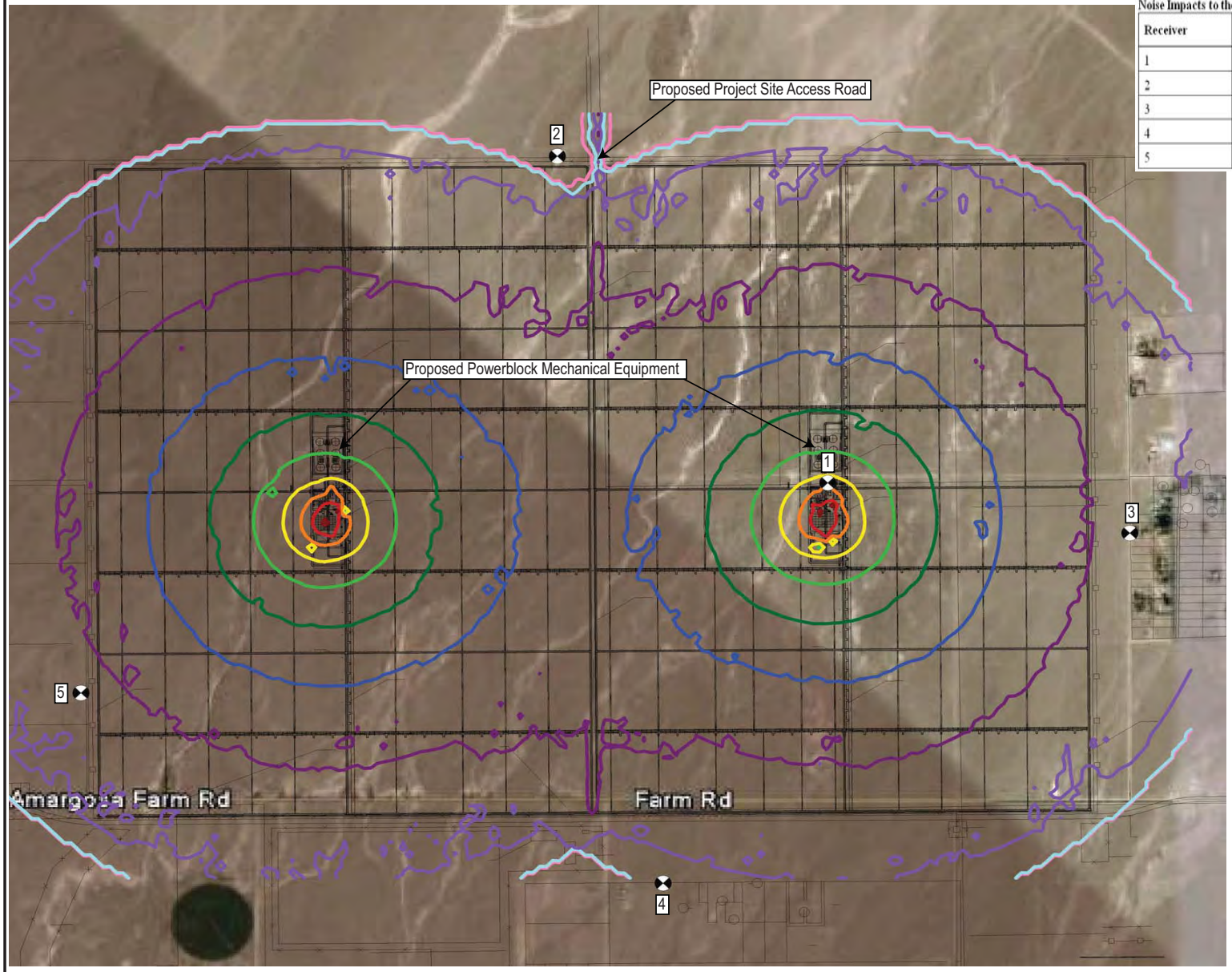

Noise Impacts to the Surrounding Area from the Project Operations

Receiver	Location	Operational Noise Impacts (dBA Ldn)
1	Eastern Powerblock	80.5
2	Northern Property Line	39.1
3	Eastern Property Line	54.7
4	Southern Property Line	50.0
5	Western Property Line	54.7

40 dBA Ldn
45 dBA Ldn
50 dBA Ldn
55 dBA Ldn
60 dBA Ldn
65 dBA Ldn
70 dBA Ldn
75 dBA Ldn
80 dBA Ldn
85 dBA Ldn
90 dBA Ldn

Amargosa Farm Road Solar Energy Project
Amargosa Valley, Nevada

Aerial Image Showing Noise Impact Contours from Proposed Facility Operations

ARCADIS

FIGURE
4-4

The Project-generated traffic will be routed to bypass the residential community by using US 95, then diverting to the proposed T&T remote access roadway, Valley View Boulevard or NV 373 to Anvil Road to Powerline Road. These routes will ensure the preservation of the community ambient noise environment in the area. The cumulative traffic noise impacts from the increased projected-related traffic to the local roads and highways will result in an increase to the existing ambient noise level by less than 3 dB; therefore, the increase is considered minor.

The employees and contractors proposed for servicing the equipment within the Project's operational mechanical areas may be considered as a sensitive noise receptor location. The federal OSHA Standards regulate an individual worker's noise exposure level based on a continuous 8-hour work day. The exposure level is based on the noise source and the duration that the worker is exposed to the noise. The combined mechanical equipment noise impacts from the proposed Project within these Project operational power block areas were evaluated at a single receptor location within the eastern power block. Table 4-24 shows the calculated mechanical noise exposure levels to the eastern power block based on a continuous 8-hour workday.

Table 4-24 Noise Impacts to the Project Area from the Project Operations Based on a Continuous 8-Hour Workday

Receiver	Location	Operational Noise Impacts (dBA)
1	Eastern Power Block	79.2

Based on the overall worst-case noise emission levels of the proposed mechanical equipment and the hours of the facility's operation, calculations show that workers located within the operational power block areas will be exposed to noise impacts of 79.2 dBA. The result of this worst-case calculated noise level demonstrates that a typical 8-hour work schedule will not expose a worker or contractor to an 8-hour TWA noise exceedance exposure limit of 90 dBA, as described by the OSHA regulations; therefore, noise exposure is considered less than significant.

4.5.2 Wet-Cooled Alternative

Noise impacts from construction and operation of a wet-cooled solar plant may be similar to the impacts described for the Proposed Action— D ry-Cooled Alternative. Further evaluation shows that the wet-cooled operation is shown to require an increase in the number of pumps and specialty type equipment, such as a cooling tower. According to a study conducted for the Beacon Solar Energy Project, a proposed wet-cooled solar plant in California, the noise emission levels presented for this wet-cooled solar plant are similar to the noise emission levels for a dry-cooled solar plant (ENSR/AECOM 2008). The main difference between the two systems is the layout and height of the noise-producing mechanical equipment. Preliminary analysis for the wet-cooled solar plant alternative indicates the noise levels would be less than the Proposed Action — Dry-Cooled Alternative.

4.5.3 No Action Alternative

Under the No Action Alternative, there would be no noise impacts from temporary construction and permanent operation of the proposed Project.

4.5.4 Mitigation

The proposed Project does not require any form of noise mitigation. Due to the isolated location of the Project site, calculations show that the operational noise levels will be below all significant noise threshold limits at defined sensitive residential receptors. Also, the temporary construction activities necessary to develop the proposed Project are shown to be below the EPA noise thresholds guidelines for all three evaluated temporary construction phases. Lastly, the results of noise impacts generated during normal work hours show that the workers will not be exposed to the OSHA 8-hour TWA noise threshold limit of 90 dBA; therefore, the Project is not required to conduct a hearing conservation plan as a result of this study.

4.6 Biological Resources

4.6.1 Vegetation

4.6.1.1 Proposed Action

Permanent impacts involve areas that are paved or otherwise precluded from restoration to a pre-Project state. Mojave desert scrub generally has a slow recovery rate, but recovery potential also depends on the nature and severity of the impact. There are permanent impacts to vegetation when there is no evidence to indicate that pre-disturbance levels of biomass, cover, density, soils, and plant community structure could be achieved within approximately 5 years. The Project would include clearing for the facilities and would occupy approximately 4,350 acres, including solar fields, power blocks, an office and maintenance building, parking area, laydown area, and a stormwater detention basin.

Removal of vegetation would involve mostly shrubs such as creosote bush, saltbush, and burrobush, and widely scattered forbs and grasses, primarily cryptantha, Mediterranean grass, goldfields, and devil’s spineflower. Other forb species that would be removed include various annual buckwheat species (e.g., flat-topped buckwheat, Thomas’ buckwheat) and several species of the primrose family (e.g., devil’s lantern and Booth’s evening primrose).

In areas where permanent clearing and grubbing would occur, there would be coordination between the Proponent and the BLM to determine the best approach to create a level, hard packed surface in order to control dust. In other areas construction activities could promote the proliferation of non-native invasive weeds, particularly Russian thistle, which was observed on the Project site. This species is currently not listed by the Nevada noxious weed list, but is considered aggressive and opportunistic, and often portrays weed-like trends. Other weed species that could invade the Project site over the long term include puncture vine (*Tribulus terrestris*),

perennial pepperweed (*Lepidium latifolium*), gumweed (*Grindelia* spp.), yellow star thistle (*Centaurea solstitialis*), and Russian knapweed (*Acroptilion repens*). Clearing of vegetation also could affect habitat structure and ecological function of riparian communities.

An indirect impact to vegetation on solar facility projects would normally include shading from parabolic troughs that would reduce the amount of sunlight available for photosynthesis; however, it is the Proponent's intent to permanently eliminate vegetation in the solar fields. Other indirect impacts include soil compaction, spread of weeds already present in the construction footprint to areas not currently infested, accidental introduction of new weed species from contaminated equipment, and changes in the distribution of precipitation falling on the solar fields. During rain events, water would be concentrated along a drip line, which could change the soil water content and cause some erosion of the soil.

Impacts to Special Status Species or Species Protected by the State of Nevada

The construction of the Project would directly impact two cactus species, including golden cholla (also called silver cholla) and beavertail pricklypear. Under NRS 527.060-120, it is illegal for any company or individual to cut, destroy, mutilate, remove, or possess cactus and yucca, or portions of these plants. The golden cholla and beavertail pricklypear occurrences are located in three main areas of the Project area. All cacti that are planned for removal must be approved and tagged by the BLM and translocation coordinated. No other special status plant species occur within the Project area.

Impacts to Federally Endangered, Threatened, Proposed, and Candidate Plant Species

No federally listed plant species were found in the Project area, but seven species were identified by the USFWS as occurring within the ROI, which includes the Ash Meadows NWR, located approximately 7 miles southeast of the Project area. (See Section 3.6 for the list of species.)

A Biological Assessment (BA) is currently being prepared for the seven species that occur in the Project's ROI that could be affected by implementation of the Project. It is anticipated that there will be no direct effects to the species; however, long-term groundwater pumping of the Project could indirectly impact six of the seven plant species at Ash Meadows. The extent of this potential impact is unclear. The water level in Devils Hole is declining due to current ground water pumping. By 2020, the water level is expected to reach a court mandated minimum water level needed to sustain the Devils Hole pupfish if 2003 pumping levels continue (Hughson 2009). The results of the groundwater modeling simulations showed after 200 years, 400 afy of pumping would cause simulated water levels at Devils Hole to decline an additional 0.05 feet. However, it is impossible to specifically measure Project effects on drawdown at Devils Hole, because of limitations of the model design. During coordination with BLM and USFWS, it was agreed that the model is the best available tool for analyzing potential impacts to groundwater but is not accurate enough to fully assess potential impacts.

The USFWS identified the white bearpoppy (*Arctomecon mernamii*), a species at risk by the NNHP, as warranting impact analysis. During extensive plant surveys conducted within the Project area in 2009, the bearpoppy was not found, although low quality habitat is present. Based

on its absence, there are no known impacts to the species as a result of the Project, and no avoidance and mitigation measures developed for the plant.

4.6.1.2 Wet-Cooled Alternative

Under the wet-cooled alternative, impacts to vegetation would be similar to those under the Proposed Action. However, the amount of ground disturbance would be greater as one 23 acre, nominal surface area, evaporation pond would be required for each 242 MW power block in addition to the ground disturbance required under the Proposed Action. These evaporation ponds would result in an additional 46 acres of total permanent disturbance to native vegetation and additional loss of habitat.

Impacts from groundwater pumping to sensitive plant species occurring at Ash Meadows NWR, would be similar to current conditions, as no increased pumping would occur. With either a wet-or- dry-cooled option, water rights would be acquired from existing water right owner(s). It could be assumed that the water that would be acquired for the wet-cooled option may still be used on an annual basis by the current water rights owner(s) in the current capacity. Therefore, impacts to nearby sensitive plant species would have minimal change if the current 10-year average remains consistent throughout the life of the Project.. The minimal change will be due to the conversion of agricultural use to industrial uses because of the reduction of return flow from irrigation.

4.6.1.3 No Action Alternative

The No Action Alternative is a Proposed Action that would not be undertaken. Under this alternative, BLM land on which the Project is proposed would continue to be managed within the BLM framework as a program of multiple use and sustained yield. The impacts of the proposed Project to vegetation would not occur; therefore, it would not cause any significant impacts to vegetation, including special status species or plants protected by the State of Nevada. However, the land would be available to other renewable projects in the Amargosa Valley. There are currently 11 applications for solar and wind energy projects, all located from near the Town of Beatty, southeast to the western edge of Spring Mountain Natural Resource Area, in southern Nye County, Nevada.

4.6.1.4 Mitigation

Due to the limitations of the DVRFS model, impacts to Ash Meadows NWR and its associated threatened and endangered species of plants and animals arising from the conversion of 400 afy of groundwater in the Amargosa Desert Hydrographic Basin from agricultural to industrial use are unclear. For this reason, mitigation measures to address uncertain impacts have not yet been identified and agreed to by the Proponent and the BLM. Consultation between the BLM, USFWS, NPS, and Proponent for acceptable mitigation measures is ongoing. Mitigation measures will be developed prior to the issuance of the Final EIS and contained in the Project Record of Decision.

A comprehensive Noxious Weed Management Plan (Plan) will be prepared with the goal of keeping the Project area free from noxious weeds (Mitigation Measure Veg5). Adherence to the specific weed control mitigation measures in this Plan will minimize the introduction and spread of noxious and invasive weeds during and following construction of the Project. Early detection and rapid response are important considerations in the development of the Plan which includes: (1) Identification of problem areas, (2) preventative measures that will be implemented to prevent the spread of these and other noxious weeds during construction, (3) treatment methods during construction and post-construction, and (4) reclamation and post-construciton monitoring. This Plan will also help minimize impacts to native plant communities temporarily impacted by the Project. Refer to Appendix A for a compilation of mitigation measures which will be used to minimize or eliminate impacts to native vegetation resulting from construction and operation of the Project (Mitigation Measures Veg1-4 and Veg6-8). It is anticipated that following the implementation these measures, impacts would be reduced to vegetation by keeping construction vehicles and other activities restricted to pre-designated areas, instructing construction personnel on the protection of native vegetation, limiting project construction to pre-determined areas based on the temporary and permanent disturbance areas, and flagging, salvaging, and replanting those species identified by BLM as sensitive. Proper mitigation measures would be required during two phases of the application process, including construction and operation and maintenance of the Project.

4.6.2 Wildlife

4.6.2.1 Proposed Action

Clearing and grubbing vegetation would directly impact wildlife resulting in loss of and fragmentation of cover, breeding, traveling, and foraging habitat. Clearance surveys prior to construction would ensure that construction activities would not cause mortality to individuals. Mortality could occur from collisions with equipment and vehicles. In addition, predation could increase as construction displaces wildlife from protected cover to uncovered habitat. Common predators attracted to areas of increased activity and noise include coyotes, foxes, raptors, ravens, and domestic dogs. The less mobile species (e.g. reptiles, small mammals, ground-nesting birds) would be particularly susceptible from grading and construction activities, and could cause mortality to those animals. (See discussion on *mammals, migratory birds, reptiles and amphibians* below).

During the scoping phase of the Project, other general wildlife issues were identified including: (1) impacts from shading of desert habitat caused by solar fields; (2) effects of fencing on wildlife; (3) impacts to local ecosystems; (4) impacts to birds resulting from heat generated by mirrors; (5) impacts resulting from use of security lighting; and (6) increased noise during construction and operation of the Project. These issues are briefly discussed below.

Permanent clearing and grubbing would be performed for the solar fields; as such, no native vegetation would remain. Although 4,350 acres of wildlife habitat loss is a significant impact, there would be no impacts from shading of desert habitat. Fencing typically creates a barrier for wildlife movement through an area, but if vegetation is completely removed for construction of

the solar field, it is highly unlikely wildlife would use the site as a travel corridor. According to NDOW, big game such as mule deer and bighorn sheep do not utilize the area (see section on *Big Game* below), although other wildlife may use Fortymile Wash as a movement corridor. Lighting may contribute to the collision risk of birds and bats, especially nocturnal species, and other wildlife that occur adjacent to the Project site such as nesting birds, foraging mammals, and flying insects. Noise can disrupt normal activity and behavior of wildlife, especially nesting and foraging birds. (See discussion on *migratory birds* below.)

Based on findings of biological surveys conducted for this Project, the following section discusses specific impacts to various taxonomic groups of animals.

Mammals

Big Game – Desert (Nelson) Bighorn Sheep (*Ovis Canadensis nelsoni*) and Mule Deer (*Odocoileus hemionus*) occupy the mountainous areas surrounding the Project area, but according to NDOW (per 2009 coordination meeting) there is no evidence to suggest there is population connectivity or regularly traveled movement corridors east to west across the Amargosa Valley; as such, impacts to big game species are not anticipated for this Project.

Other Mammals – During biological surveys conducted in 2009 in support of this Project, a total of 18 mammal species were observed in the Project area. Construction and operation of the Project may cause direct mortality to burrowing mammals identified in Section 3.6. Those animals displaced during construction could be crushed by equipment and vehicles or be killed by increased predators in the area. The bats forage on insects, so removal of vegetation and rechanneling of washes during construction could disrupt natural foraging habitats for bats in the Project area. After completion of the Project, bats may find Project components attractive for roosting or foraging.

Migratory Birds

Habitat in the Project area provides cover, breeding, foraging, and traveling habitat for a number of bird species. During biological surveys conducted in 2009, 27 species were observed in the Project area.

The Project area contains suitable habitat for Burrowing Owl and the LeConte's Thrasher, and both species are known to occur in the area. LeConte's Thrashers build their nests in shrubs 2 to 4 feet off the ground, so shrub removal would eliminate nesting, cover, and foraging potential for the bird within the Project footprint. Suitable nesting and foraging habitat are absent for the Phainopepla; therefore, no impacts are anticipated for this species, even though it was observed in the Project area in the Spring 2009.

The Project area does not contain suitable nesting or roosting habitat for raptors, and only marginal foraging habitat for these species. Suitable nest sites for Swainson's Hawk may occur in adjacent agricultural areas; however, no nesting habitat exists in the vicinity for Prairie Falcon.

The NDOW and USFWS identified other species with heightened conservation priority that could be impacted by construction and operation of the Project. They include Bendire's Thrasher and Loggerhead Shrike. Neither of these species were detected during 2009 surveys.

Bendire's Thrasher is included as a Watch List species by Partners in Flight, which calls for the species conservation due to restricted continental range and small population size. It is highly unlikely that Bendire's Thrasher would occupy habitat within the Project area; therefore, no impacts to this species are anticipated. The Loggerhead Shrike is included as a Priority Species by Partners in Flight due to declines from habitat loss, pesticides, and winter mortality. Habitat in the Project area contains unsuitable nest tree structure, and does not provide adequate perch areas for the bird. It is highly unlikely the Loggerhead Shrike would nest within the Project area; however, if suitable nesting trees or shrubs are present nearby, the Project could provide foraging habitat, and foraging potential could increase after completion of the Project due to the presence of taller structures that could serve as perches or lookouts.

For those bird species that have the potential of nesting in the Project area, the loss of active bird nests or young is regulated by the federal MBTA, so it is unlawful to pursue, hunt, take, capture, kill, or possess any migratory bird or part, nest, or egg of such bird listed in 50 CFR 10.13. The MBTA applies to the bird species that will be impacted during the construction phase of the Project. Compliance with the MBTA will require surveying for and delineating non-disturbance buffers for nesting birds during the breeding season.

Noise from construction activities could temporarily disturb wildlife from foraging and nesting immediately adjacent to the Project area. Birds rely on vocalizations during the breeding season to attract a mate within their territory and to respond to potential dangers in the area and young begging for food. Noise levels from certain construction and operation activities could reduce the reproductive success of nesting birds.

Reptiles

Grading and construction activities and vehicle use could cause direct mortality to slower-moving reptiles. These cold-blooded animals use their environment to thermoregulate, and because they cannot shelter themselves from heat and cold during construction activities, they would likely die from exposure, predation, or crushing from vehicles and equipment.

Snakes and Lizards – During biological surveys conducted in 2009 in support of this Project, a total of six snake species and six lizard species were found in the Project area (see Section 3.6 for identified list of species). Of the 12 total species of snakes and lizards present in the Project area, the Desert Iguana is on the NNHP Plant and Animal Watch List, which means the iguana is vulnerable to decline by habitat loss. Construction of the Project would eliminate iguana habitat that includes creosote bush on sandy soils. The second reptile that has been identified as a conservation priority species is the Nevada Shovel-nosed Snake. The reach of Fortymile Wash located inside the Project limits will be bladed and rechanneled around the periphery of the solar facility; therefore, Nevada Shovel-nosed Snake habitat will be eliminated during construction of the Project.

Amphibians

The southern limit of the Amargosa Toad's range is located in Oasis Valley near Beatty, approximately 25 miles north of the Project area. Due to the lack of permanent water this species is not expected to occur within the Project area. Furthermore, groundwater pumping for the Project is not expected to impact hydrological function of the watershed, and therefore toad habitat in Oasis Valley.

Impacts to Federally Endangered, Threatened, Proposed, and Candidate Wildlife Species

Desert Tortoise

The Project is located in the Desert Tortoise Eastern Mojave Recovery Unit and close to the border of the Northwestern Mojave Recovery Unit, but is not designated as Critical Habitat. Construction of the Project would eliminate approximately 4,350 acres of low quality Desert Tortoise habitat. During surveys conducted in 2009 in support of this Project, no live or dead tortoises were found, but four old Class 4 burrows were located in the northwest portion of the Project area.

In the event that a tortoise is found in the Project area, impacts would include loss of foraging, nesting, and cover sites; loss of dispersal areas and connectivity to other areas; and contracted home ranges. Juvenile Desert Tortoise may face an increased risk of predation from raptors and ravens attracted to the site and increased availability of perches. Tortoises may also face impacts due to increased risk from roads and traffic. The site will be surrounded by tortoise-proof fencing to prevent any Desert Tortoise from becoming entrapped by the flood control channels or impacted by work occurring within the facility.

With exception of the Desert Tortoise, no other federally listed wildlife species or habitat are present within the Project area.

Ash Meadows NWR Species

Five fish (Devils Hole Pupfish, Ash Meadows Amargosa Pupfish, Warm Springs Pupfish, and Ash Meadows Speckled Dace) and one invertebrate (Ash Meadows naucorid) inhabit the Ash Meadows NWR within the Project's ROI. A Biological Assessment (BA) is currently being prepared for these six wildlife species that could be affected by implementation of the Project. It is anticipated that there will be no direct effects to the species; however, long-term groundwater pumping of the Project could indirectly impact these six wildlife species at Ash Meadows. The extent of this potential impact is unclear. The water level in Devils Hole is declining due to current ground water pumping. By 2020, the water level is expected to reach a court mandated minimum water level needed to sustain the Devils Hole pupfish if 2003 pumping levels continue (Hughson 2009). The results of the groundwater modeling simulations showed after 200 years, 400 afy of pumping would cause simulated water levels at Devils Hole to decline an additional 0.05 feet. However, it is impossible to specifically measure Project effects on drawdown at Devils Hole, because of limitations of the model design. During coordination with BLM and USFWS, it was agreed that the model is the best available tool for analyzing potential impacts to

groundwater but is not accurate enough to fully assess potential impacts. For this reason, mitigation measures to address uncertain impacts have not yet been identified and agreed to by the Proponent and the BLM. Consultation between the BLM, USFWS, NPS, and Proponent for acceptable mitigation measures is ongoing. Mitigation measures will be developed prior to the issuance of the Final EIS and contained in the Project Record of Decision.

4.6.2.2 Wet-Cooled Alternative

Under the wet-cooled alternative, impacts to wildlife would be similar to those under the Proposed Action. However, the amount of ground disturbance would be greater as one 23-acre evaporation ponds per 242 MW power block would be required for the wet-cooled alternative.

The wet-cooled alternative would include two evaporation ponds that would collect blowdown water from the cooling towers. There is potential for wildlife threats posed by the evaporation ponds. First, creation of a new water source to an area where water is scarce could attract ravens to the Project, potentially increasing predation rates on juvenile desert tortoise in adjacent habitat. Second, waterfowl, shorebirds, and other resident or migratory birds could be harmed by high selenium levels or hyper-saline conditions if they drink evaporation pond water or eat aquatic invertebrates (or their terrestrial emergents) inhabiting evaporation pond water. The evaporation and associated risk to birds are a source of concern

For wet- or dry-cooled alternatives, the Proponent would either lease or purchase existing certified water rights for water needs during construction and operation of the proposed Project. With either a wet- or dry-cooled option, water rights would be acquired from existing water right owner(s). Groundwater flow model simulations and a hydrologic analysis have been performed for the dry-cooling option. It could be assumed that the water that would be acquired for the wet-cooled option may still be used on an annual basis by the current water rights owner(s) in the current capacity. Therefore, impacts to nearby wildlife resources would have minimal change if the current 10-year average remains consistent throughout the Project life. The minimal change will be due to the conversion of agricultural water rights to industrial water rights, because of the reduction of return flow from irrigation.

4.6.2.3 No Action Alternative

Under the No Action Alternative, the impacts of the proposed Project to wildlife would not occur; therefore, would not cause any significant impacts to wildlife, including federally listed and other special status species.

4.6.2.4 Mitigation

The creosote bush series of Mojave desert scrub provides foraging, cover, and breeding habitat for migratory birds. The proposed solar plant would eliminate nesting habitat and result in direct and cumulative impacts to these species due to habitat loss or injury/mortality of individuals. To avoid and minimize impacts to migratory birds, mitigation measures WL1 through WL2 have been proposed; mitigation measures WL3 and WL4 address the Burrowing Owl specifically. To

discourage raptors from perching on the 230kV transmission line, mitigation measure WL5 is proposed.

The construction and operation of the proposed Project would result in the loss of approximately 4,350 acres of low quality tortoise habitat. According to the BLM's "*Desert Tortoise Habitat Management on the Public Lands: A Rangewide Plan,*" compensatory mitigation is required to offset the impact and fully mitigate for Desert Tortoise. Additionally, the construction and operation of the Project may result in an impact to the species located at Ash Meadows NWR. Mitigation measures WL6 through WL22 will be implemented to minimize and avoid impacts to Desert Tortoise. Following USFWS review of the BA, the level of compensatory mitigation required for this Project will be determined. All terms and conditions detailed in the Biological Opinion will be adhered to. It is anticipated that by following the guidance in the Biological Opinion as well as the mitigation detailed below, impacts to biological resources will be minimized.

Gila Monsters were not found during the biological surveys conducted in 2009, but the species is difficult to detect and cannot be assumed to be absent based on the surveys. If they are present in the Project area, they could be harmed or killed during construction activities. To avoid or minimize potential impacts to the Gila Monster, conservation measures WL23 and WL24 are proposed.

Appropriate mitigation measures would be required during, construction, and operation and maintenance of the proposed Project. A list of mitigation and conservation measures is included in Appendix A.

4.7 Historic and Cultural Resources

The following presents possible environmental consequences to known cultural sites.

4.7.1 Proposed Action

Based upon the complete cultural inventory of the proposed Project's APE, thirteen prehistoric and/or historic cultural sites in the currently proposed Project area were newly recorded and evaluated to whether they were eligible for listing on the National Register of Historic Places. The BLM in consultation with the Nevada State Historic Preservation Office (SHPO) both concurred that only one prehistoric site (26Ny13440) is an eligible property that could yield important information regarding prehistory in southern Nevada. Due to the site's size and composition, it would be adversely impacted by proposed Project activities in both action alternatives.

Mitigation, in consultation with the SHPO as per 36 CFR 800.6, would need to be addressed under an approved Treatment Plan and would likely involve formal data recovery prior to Project related ground-disturbing activities. Tribal representatives are also in agreement with the BLM and SHPO on the eligibility status of the cultural sites and that data recovery needs to occur.

Given the low density of sites in this large Project area, the potential for unanticipated discoveries is low.

A field inspection of the viewshed surrounding the Project area was also performed and resulted in the determination that there would be no visual impacts to any historic properties in the town of Amargosa.

4.7.2 Wet-Cooled Alternative

Impacts to cultural and historic resources from construction and operation of a wet-cooled solar plant would be similar to the impacts described for the Proposed Action (dry-cooled alternative).

4.7.3 No Action Alternative

Under the No-Action alternative, the proposed Project would not be constructed, and no historic or cultural resources would be affected by any Project activities, however, the purpose and need for the Project would not be met.

4.7.4 Mitigation

No mitigation is required.

4.8 Paleontological Resources

This section describes and evaluates the potential impacts on paleontological resources that would result from the construction, operation, maintenance, and decommissioning of the proposed Project.

4.8.1 Impact Assessment Methodology

In order to assess the relative impact each alternative may potentially have on paleontological resources, potential impact levels were determined for each alternative based on the PFYC, the inventory database of fossil localities, and the paleontological resources survey. Literature research, institutional record searches, the paleontological resources survey, and the PFYC provided the information necessary to assign a potential impact level of high, low, or moderate/undetermined to portions of the Project area. Future provisions for mitigation of adverse impacts to significant paleontological resources exposed during construction-related activities in the Project area are based upon these determinations of potential impact level. The terms “high potential impact level,” “low potential impact level,” and “moderate/undetermined potential impact level” are defined as follows.

High Potential Impact Level. Geological units with a high potential for containing significant paleontological resources are determined to have a high potential impact level. In these cases, the

geological unit contains a high density of recorded fossil localities, has produced fossil remains in or near the vicinity of the proposed Project, and is very likely to yield additional remains during construction. Areas identified as having a class 4 or 5 in the PFYC system are considered to have a high potential impact level.

Low Potential Impact Level. The geological unit contains no or a very low density of recorded fossil localities, has produced little or no fossil remains in the vicinity of the proposed Project, and is not likely to yield any fossil remains. Nevertheless, geological units with few or no prior recorded fossil localities can still prove fossiliferous during paleontological mitigation activities. Areas identified as having a class 1 or 2 in the PFYC system are considered to have a low potential impact level.

Moderate/Undetermined Potential Impact Level. The geological unit has limited exposure in the Project area, is poorly studied, or contains no recorded paleontological resource localities. However, in other areas, the same or similar geological units may contain sufficient paleontological localities to suggest that exposures of the unit in the Project area would have at least a moderate potential for yielding fossil remains. Areas with a class 3 in the PFYC system are considered to have a moderate or undetermined potential impact level.

The analysis of impacts to paleontological resources is based on a literature review of known resources, record searches at paleontological institutions, the paleontological resources survey, and assignment of paleontological potential based on geological units and known fossil localities. The following indicators were considered when analyzing the potential impacts to paleontological resources:

- known fossil localities
- proximity to geological units with potential to contain paleontological resources
- depth of excavations associated with project components

The following section describes the potential impacts on paleontological resources for each Project alternative.

4.8.2 Proposed Action

The Proposed Action is anticipated to have a low impact on paleontological resources within the Project area. Low impact areas comprise young alluvial deposits (Qay) and intermediate alluvial deposits (Qai). These geological units are considered to contain a low potential for paleontological resources.

4.8.3 Wet-Cooled Alternative

Impacts to paleontological resources from construction and operation of a wet-cooled solar plant would be similar to the impacts described for the Proposed Action (dry-cooled alternative).

4.8.4 No Action Alternative

Under the No Action Alternative, there would be no Project-related impacts to paleontological resources.

4.8.5 Mitigation

The primary impact issue for paleontological resources is the loss of scientifically significant fossils and their contextual data. Two types of impacts could potentially affect paleontological resources:

- Direct and permanent ground disturbance during construction
- Indirect and permanent disturbance due to changes in public accessibility

The primary concern regarding impacts to paleontological resources is that direct damage or destruction of fossils would result in the loss of important scientific information. It is possible that ground disturbance, such as grading and cutting of access roads, could encounter important paleontological resources. In addition, adverse impacts indirectly associated with construction are a concern. For example, fossils could be subject to damage or destruction by erosion that is accelerated by construction disturbance. Improved access and increased visibility as a result of construction could cause fossils to be damaged, destroyed, or collected as a result of unauthorized collection or vandalism. However, not all impacts of construction are adverse to paleontology. Excavation can and often does reveal significant fossils that would otherwise remain buried and unavailable for scientific study. In this manner, excavation can result in beneficial impacts. Such fossils can be collected properly and catalogued into the collection of a museum repository so that they can be available for scientific study.

Results of the data inventory, paleontological resources survey, and impact assessment demonstrate that the geological units present in the Project area have a low potential to contain significant paleontological resources. As a result, specific mitigation measures are not necessary. However, should significant paleontological resources be discovered during construction, then mitigation measures should be implemented to reduce potential adverse impacts to significant paleontological resources resulting from Project construction. The mitigation measures described in Appendix A are in compliance with the SVP standard guidelines for mitigating adverse construction-related impacts on paleontological resources and should be followed if significant paleontological resources are discovered during construction (SVP 1995, 1996). Implementation of these mitigation measures will effectively reduce potential impacts to paleontological resources to a negligible level by allowing for the collection of fossils and corresponding geological and paleo-environmental data that otherwise might be lost to earth-moving activities. The scientific and educational value of the fossils and their associated contextual data constitute the chief significance of the resource. Their collection, therefore, mitigates the impacts to paleontological resources. These mitigation measures are subject to review by the BLM.

4.9 Socioeconomic Resources

The following sections discuss the potential effects of construction and operation on the socioeconomic resources within the ROI.

4.9.1 Proposed Action

Implementation of the Proposed Action would have a direct and indirect effect on regional social and economic resources from the increase in the level of economic activity in the area that would result from construction and operation of the proposed Project.

4.9.1.1 Project Work Force and Population

Construction

Project construction is expected to occur over a 39 month period. During construction, manpower needs would average approximately 650 employees per day, peaking to approximately 1,300 workers in Month 17 of construction (Table 4-26). This would make the proposed Project the largest employer within the Amargosa Valley, with the next highest being Ponderosa Dairy with approximately 120 employees.

The primary trades required for construction of the proposed Project will include pipefitters, skilled and unskilled laborers, electricians, carpenters, cement finishers, equipment operators, sheet metal works, ironworkers, and truck drivers. The proposed Project would be expected to draw from available construction labor in the regional area.

Even at the peak of construction (approximately 1,300 workers), the current availability of approximately 70,000 construction workers in Nye and Clark counties in 2010 would be sufficient to meet the employment needs during construction, although a small number of workers in some specialized trades may come from outside the region. Construction of the proposed Project would require less than 2 percent of the available workforce in the regional area; thus, construction labor demand would not significantly affect the availability of construction labor in the region. In addition, Nevada and particularly the Las Vegas area have been hit hard by the recent economic downturn, which has led to high job losses in construction. Thus, a plentiful workforce is likely to be available in the region to fill the employment needs of the Project.

Operations

The proposed Project is expected to employ approximately 180 workers during operation. Some of the operations employment may involve relocation to the area for workers with specialized technical or managerial skills. Given the modest size of the workforce and the likelihood that some of these workers may already be residents of the local area, population impacts would be minor.

4.9.1.2 Population and Housing

Construction

According to an Electric Power Research Institute report titled *Socioeconomic Impacts of Power Plants*, construction workers normally commute as much as 2 hours to construction sites from their homes, rather than relocate (EPRI 1982). It is anticipated that the vast majority of the construction workforce (peak workforce of approximately 1,300 workers and an average of approximately 650 workers per day over the 39-month duration of construction) would commute to the Project area rather than relocate (Table 4-25). Thus, impacts to the local population are expected to be minimal, and would not induce substantial growth. Additionally, the Project area is in a remote, sparsely inhabited area and would not displace existing populations.

Table 4-25 Construction Industry Employment

	2006	2008	2010 Forecast	% Change 2006 to 2010
Nevada	141,874	118,837	85,895	
Annual Percentage Change	-	-16.2%	-27.7%	-39.5%
Las Vegas Metropolitan Statistical Area	108,430	94,149	68,392	
Annual Percentage Change	-	-13.2%	-27.4%	-36.9

Source: Nevada Department of Employment, Training and Rehabilitation: Nevada Workforce Informer 2009.

It is assumed that the majority of workers will commute from the Las Vegas metropolitan area, approximately 80 miles southeast of the Project area. A few construction workers may choose to permanently relocate to the communities near the Project area during the construction phase. These include the Town of Amargosa Valley, Beatty, and Pahrump. There are approximately 613 hotel/motel rooms and suites among 9 different establishments in the Amargosa Valley, Beatty, and Pahrump, with extensive additional temporary housing available in the Las Vegas metropolitan area. Thus, should some construction workers choose to stay temporarily at a local area motel or hotel, there would be ample transient housing.

Additional housing opportunities are available in the form of RV and mobile home sites. There are over 225 RV spaces in three locations in Amargosa Valley: Longstreet Inn & Casino, My Own Mobile Home Park, and Fort Amargosa RV Park. Additional RV spaces are available in Beatty and Pahrump. Availability varies depending on season, with greater availability during the summer months. Should a portion of the workers relocate to the area for the duration of their construction assignments, effects to available housing and population would be minor, as the 2008 residential vacancy rate was over 15 percent in Pahrump, and the 2000 vacancy rates in Amargosa Valley and Beatty were over 20 and 26 percent respectively. Because the construction workforce largely will commute to the area rather than relocate, increased demand on the local housing supply is expected to be minor.

Operations

Operation of the Project is expected to have a minor impact on the availability of regional housing due to the relatively small number of workers needed for plant operations, and the abundance of available local housing and land in the Amargosa Valley.

The proposed Project would be constructed on undeveloped BLM managed lands. Because the Project area is designated by the BLM for disposal and incorporated into the Amargosa Valley Area Plan as future energy development, the views from residential subdivisions could change, depending on existing site conditions and current viewshed. Visual impacts of the proposed Project are discussed in section 4.12. Indirect socioeconomic impacts may also include noise, air quality issues, and increased traffic.

4.9.1.3 Economy and Employment

Construction

Construction would create a temporary (up to 39 months), beneficial impact on the local economic base and fiscal resources. Construction employment wages and salaries would provide additional income to the area, as would expenditures within the ROI for construction materials and services. The construction payroll has been estimated at approximately $223.6 million over 39 months ($68.8 million estimated annually). Capital expenditures and local spending on construction materials and equipment within the ROI are estimated to total approximately $153 million over 39 months ($47.1 million estimated annually).

Construction is expected to directly create an average of approximately 650 annual full-time employment (FTE) over 39 months, with a peak monthly employment of approximately 1,300. This direct employment will create both indirect and induced secondary employment in the regional area. Indirect employment is defined as employment that will be generated by the purchase of goods and services required by the proposed Project. Induced employment is defined as employment that will be generated by the purchase of goods and services by businesses that are indirectly supported by the proposed Project.

The top 10 industries that would benefit the most in terms of the indirect and induced economic output impacts include: rental housing, whole trade businesses, real estate establishments, physicians and other medical professionals, food service, private hospitals, architectural and engineering services, insurance carriers, banks, and telecommunications.

Also, (using the assumptions above) during the construction phase the Project's estimated annual employment creation within the ROI would be as follows:

- Direct (Project) employment: approximately 650
- Indirect employment: approximately 290
- Induced employment: approximately 195
- Total employment creation: approximately 1,300

Table 4-26 Construction Workforce by Skill (Monthly)

Trade or Skill	M1	M2	M3	M4	M5	M6	M7	M8	M9	M10	M11	M12	M13	M14	M15	M16	M17	M18	M19
Surveyor	0	16	12	12	16	18	17	21	21	18	20	20	25	24	18	17	14	10	12
Operator	25	51	56	58	64	92	92	97	97	97	97	97	115	107	104	104	104	104	104
Laborer	14	36	37	39	69	91	69	156	190	230	230	230	230	230	230	213	213	213	213
Truck Driver	21	17	15	16	28	30	35	44	44	36	32	29	39	40	40	40	38	38	38
Oiler	1	5	3	2	3	3	3	5	5	3	5	3	7	7	6	5	3	2	2
Carpenter	0	6	20	23	22	30	23	81	92	92	104	104	104	115	115	115	115	115	115
Boilermaker	-	-	-	-	-	-	-	-	-	-	-	-	-	-	-	13	13	13	13
Paving Crew	-	-	-	-	6	6	-	5	-	-	-	-	5	-	-	-	-	-	-
Pipe Fitter	-	1	14	16	12	14	13	16	32	58	115	115	167	173	190	307	375	352	340
Electrician	-	0	6	12	12	13	13	18	25	28	43	52	68	108	150	169	173	173	173
Cement Finisher	-	3	14	16	15	22	17	24	44	92	92	92	92	115	115	115	115	115	115
Ironworker	-	5	12	12	12	29	29	29	48	48	48	68	68	68	68	68	68	68	68
Millwright	-	-	-	-	-	-	-	-	-	-	23	23	23	23	23	29	29	29	29
Tradesman	-	14	49	58	59	85	67	52	31	29	14	9	9	12	9	15	12	3	2
Project Manager	1	1	1	1	1	1	1	3	3	3	3	3	3	3	2	3	3	3	3
Construction Manager	1	1	1	1	1	1	1	3	3	3	3	3	3	3	2	3	3	3	3
PM Assistant	1	1	1	1	1	1	1	3	3	5	5	5	5	5	5	5	5	5	5
Support	1	1	1	1	1	1	1	3	3	5	5	5	5	5	5	5	5	5	5
Support Assistant	1	1	1	1	1	1	1	3	3	5	5	5	5	5	5	5	5	5	5
Engineer	3	3	2	3	3	3	3	10	10	9	12	12	12	12	12	12	12	14	14
Timekeeper	1	1	1	1	1	1	1	3	3	3	3	3	3	3	2	3	3	3	3
Administrator	2	2	2	2	2	2	2	7	7	7	7	7	7	7	7	7	7	7	7
Welder	1	1	1	1	1	1	1	1	1	1	1	1	1	1	1	1	1	1	1
Total	**73**	**166**	**249**	**276**	**330**	**445**	**390**	**584**	**665**	**772**	**867**	**886**	**996**	**1066**	**1109**	**1254**	**1318**	**1281**	**1270**

Table 4-25 Construction Workforce by Skill (Monthly)

Trade or Skill	M20	M21	M22	M23	M24	M25	M26	M27	M28	M29	M30	M31	M32	M33	M34	M35	M36	M37	M38	M39
Surveyor	13	16	14	18	16	16	8	1	3	3	1	-	-	2	3	3	3	3	-	-
Operator	104	84	81	74	74	64	47	17	10	9	5	2	2	6	8	8	8	8	2	-
Laborer	183	143	143	116	97	97	97	68	68	49	49	40	35	29	29	25	17	12	6	-
Truck Driver	38	30	29	29	26	26	18	18	17	17	17	14	14	14	12	12	6	6	3	-
Oiler	3	5	3	5	5	5	3	1	1	1	0	-	-	1	1	1	1	1	-	-
Carpenter	115	115	115	115	92	92	92	81	58	58	46	12	12	12	6	6	-	-	-	-
Boilermaker	13	13	13	13	13	13	13	13	-	-	-	-	-	-	-	-	-	-	-	-
Paving Crew	-	-	-	-	-	-	-	-	-	-	-	-	-	-	-	-	-	-	-	-
Pipe Fitter	328	315	315	315	315	288	288	282	230	196	115	89	68	12	12	12	6	6	6	-
Electrician	162	162	146	146	129	129	62	62	52	52	41	10	10	10	6	6	6	6	6	-
Cement Finisher	115	115	92	92	92	92	92	92	81	81	81	63	29	23	12	12	-	-	-	-
Ironworker	68	68	68	49	49	23	23	23	23	23	12	12	12	12	12	12	6	6	6	-
Millwright	29	29	29	29	29	17	17	17	17	12	12	12	12	12	12	12	-	-	-	-
Tradesman	2	2	2	2	2	5	5	3	-	-	-	-	-	-	-	-	-	-	-	-
Project Manager	3	3	3	3	3	3	3	2	3	3	3	3	3	3	3	3	3	3	3	1
Construction Manager	3	3	3	3	3	3	3	2	3	3	3	3	3	3	3	3	3	3	3	1
PM Assistant	5	5	5	5	5	5	5	5	5	5	5	5	3	3	3	3	3	3	3	1
Support	5	5	5	5	5	5	5	5	5	5	5	5	3	3	3	3	3	3	3	1
Support Assistant	5	5	5	5	5	5	5	5	5	5	5	5	3	3	3	3	3	3	3	1
Engineer	14	14	14	14	14	14	14	14	14	14	10	10	10	9	10	10	9	10	9	5
Timekeeper	3	3	3	3	3	3	3	2	3	3	3	3	3	3	3	3	3	3	3	1
Administrator	7	7	7	7	7	7	7	7	7	7	7	7	7	6	7	7	6	7	6	2
Welder	1	1	1	1	1	1	1	1	1	1	1	1	1	1	1	1	1	1	1	0
Total	**1219**	**1143**	**1096**	**1049**	**985**	**913**	**811**	**721**	**606**	**547**	**421**	**296**	**230**	**167**	**149**	**145**	**87**	**89**	**63**	**13**

These estimates were based on the 2009 Prevailing Wages for Nye County, Nevada Office of the Labor Commissioner, the Proponent's job projections for the proposed Project and the National Renewable Energy Laboratory's Job and Economic Development Impact model.

This additional employment would result from the local construction expenditures, as well as from spending by local construction workers. This indirect and induced employment is expected to be filled both locally and regionally, and would result in positive economic impacts.

Operations

As stated above, approximately 180 full-time average annual employees will be needed to operate and maintain the proposed Project, including 5 management staff; 4 administrative and clerical staff; 90 operation and power block routine maintenance staff (supervisors, specialists, engineers, operators); 28 skilled laborers (mechanics, electricians, welders); and 55 unskilled staff. It is estimated that 75 percent of the approximately 180 employees will be hired locally, with the remainder of the employees coming from outside the local area.

4.9.1.4 Public Services

Construction

The proposed Project will rely on both on-site security and the Nye County Sheriff's Department law enforcement protection services during construction. Site guards will be trained, uniformed, unarmed personnel. Their primary responsibility will be to control egress and ingress of personnel and vehicles, perform fire and security watch during off hours, and perform security badge administration. A Project-wide photo security badge system for all construction and operations personnel will be used to control security. The perimeter of the Project site will be fenced with an 8-foot-high security fence on the north and south side of the Project, and a 30-foot-high security wind fence on the east and west sides of the Project.

The proposed Project will rely on both on-site fire protection systems and local (e.g., Amargosa Valley Volunteer Fire Department) fire protection services during construction. The Amargosa Valley Volunteer Fire Department Station is located at 851 E. Amargosa Farm Road, which is approximately 1.3 miles from the southeast corner of the solar field. If needed, mutual aid would be provided by the Pahrump and Mercury fire departments. Ongoing discussions with Nye County may further define the services provided by the Amargosa Valley Volunteer Fire Department. A Construction Fire Protection and Prevention Plan will be developed and followed throughout all phases of construction. During construction, the permanent facility fire suppression system will be placed in service as early as practicable. Prior to installation of the facilities, permanent fire suppression system, fire extinguishers, and other portable firefighting equipment will be available on-site.

Operations

Project operation may moderately increase demands on local police, fire, medical, and other emergency services. However, population in-migration into the Amargosa Valley, Pahrump, and Beatty as result of the proposed Project is expected to be minimal. The modest size workforce would not be expected to have an adverse impact on demand relative to the capacity of most local public services. Additionally, the services provided by the Nye County Sheriff's Department and the Amargosa Valley Fire Department could be enhanced by emergency services in Pahrump and Las Vegas, if requested. Ongoing discussions with Nye County may further define the level of services provided by the respective county services. Project health and safety programs and fire protection systems and procedures would be expected to help reduce the need for fire, medical, and other emergency services.

4.9.1.5 Utilities

Construction

Although minimal or no population impacts are expected, there would be some demands on existing utility services during construction as a result of on-site activities. Water needed for construction would be obtained from the three private wells located southwest of the Project area. Potable water would be brought in and stored in approved water tanks. Sanitary wastes generated during construction will be collected in portable, self-contained toilets and hauled to an approved disposal site.

Operations

The proposed Project would utilize approximately 400 afy of existing groundwater currently being used for agriculture; thus, it would not impact local water supplies nor increase basin usage and represents less than 2 percent of the total perennial yield of the Amargosa Basin. Project sanitary wastes would be disposed of by an on-site septic system and leach field. Operations of the proposed Project would not impact available electrical needs; and by its very nature, would represent a net gain in regional capacity.

4.9.1.6 Schools

Construction

Since it is anticipated that the majority of construction workers would commute, rather than relocate, construction of the proposed Project is not expected to increase enrollment in area schools. Furthermore, construction workers who relocate temporarily for a work assignment typically do not bring their families with them.

The Amargosa School, a combined elementary and middle school, is within 1 mile of the Project site and had a 2009 enrollment of 194 students. High school age students in Amargosa Valley attend Beatty High School which has a 2009 enrollment of 139. The Nye County School District

is currently negotiating with the BLM to acquire 20 to 30 acres for a new school site in Amargosa Valley (Amargosa Area Plan 2009). Potential impacts during construction include increased traffic along Amargosa Farm Road, fugitive dust from construction activities, and increased noise. Construction activities will normally occur during daylight hours between sunrise and sunset.

All construction traffic will be required to use the selected access road from US 95, south to the Project site. Some residual increase in traffic along Amargosa Farm Road is anticipated, depending on the commuting route of the construction worker. Fugitive dust must be controlled per requirements of the SAD Permit and the SWPPP. Implementation of BMPs to control dust will minimize fugitive dust impacts. Mitigation measures to control dust and noise impacts are described in Appendix A.

Operations

Operation of the proposed Project is expected to have minor local and regional effects on schools because of the relatively small number of workers needed for operation of the plant (approximately 180 employees).

4.9.1.7 Fiscal Resources

Construction

Annual expenditures within the ROI on construction materials, supplies, and equipment are estimated to total $47.2 million. Total expenditures for the proposed Project within the ROI and outside the ROI over the 39-month construction period are estimated to be approximately $2 billion.

Pursuant to Nevada law AB 522, approved renewable energy projects are only required to pay sales and use tax at the rate of 2.25 percent, which is allocated in the same manner as other taxes collected under the Local School Support Tax (LSST). Over the 39-month construction period, the Project would pay approximately $45 million in sales tax to the State of Nevada for the LSST.

In addition to sales tax revenue, the proposed Project would generate for Nye County up to $34 million in property taxes during construction, after taking into account the 55 percent property tax abatement for renewable energy projects under AB 522 (Table 4-27).

Table 4-27 Property Tax Revenue during Construction		
Property Tax Dispersal	**Dispersal Percentage**	**Estimated Income**
State	45	$15,300,000
Nye County	20.24	$6,881,600
Nye County School District	20.075	$6,825,500
Amargosa Town Fund	12.1	$4,114,000
State Capital Debt and Parks	2.585	$878,900
Total		**$34,000,000**

Operations

During operation, it is expected that the annual purchases for materials supplies, equipment, and services within the ROI would total approximately $6.0 million. In the event that all purchases are made within Nye County, which has a tax rate of 7.1 percent, these expenditures would generate approximately $355,000 in annual sales tax revenue (Table 4-28).

Table 4-28 Estimated Annual Sales Tax Revenue during Operation		
Sales Tax Dispersal	**Dispersal Percentage**	**Estimated Income**
State General Fund	2	$120,000
Nye County School District	2.6	$156,000
Nye County	0.5	$30,000
Nye County Transportation & Air Quality	0.25	$15,000
Supplemental City-County Relief Tax (split between County & State based on formula)	1.75	$105,000

4.9.2 Wet-Cooled Alternative

Impacts to socio-economic resources from construction and operation of a wet-cooled solar plant would be similar to the impacts described for the Proposed Action (dry-cooled alternative).

4.9.3 No Action Alternative

Under the No Action Alternative, the BLM would not grant a right-of-way to the Proponent. The BLM land on which the Project is proposed would continue to be managed within the BLM's framework of a program of multiple use and sustained yield, and the maintenance of environmental quality (43 U.S.C. 1781 (b)) in conformance with applicable statutes, regulations, policy, and land use plan.

The results of the No Project/No Action Alternative would be the following:

- The impacts of the proposed Project would not occur; however, the land on which the Project is proposed would become available to other uses that are consistent with the BLM's land use plan, including another renewable energy project.
- The benefits of the proposed Project in reducing greenhouse gas emissions from gas-fired generation would not occur. Both State and Federal law support the increased use of renewable power generation.

If the proposed Project were not approved, renewable projects would likely be developed on other sites in the Mojave Desert or in adjacent states as developers strive to provide renewable power that complies with utility requirements and State/Federal mandates.

Construction methods, resulting impacts, and regulatory requirements associated with other renewable projects would be similar to those identified for the proposed Project. However, as such, socioeconomic impacts associated with construction and operation of other renewable projects could be expected to be either similar when compared to the proposed Project (no significant impacts and providing positive fiscal benefits) or greater (resulting in significant impacts such as by causing a burden on community services). Furthermore, important public benefits discussed above under the fiscal and non-fiscal effects in the Socioeconomic Resources would not occur within the ROI.

4.9.4 Mitigation

No mitigation is required.

4.10 Environmental Justice

Information about the proportion of population that may be impacted by the alternatives and are characterized as minority and/or low-income is provided in Section 3.10. Overall, the data show that there is a slightly higher proportion of Hispanic residents in the Amargosa Valley, and there are higher proportions of low-income populations in the Amargosa Valley compared to the overall population in Nye County and Las Vegas.

4.10.1 Proposed Action

Income and revenue benefits associated with the proposed Project would be distributed throughout all areas, including EJ populations. Adverse impacts associated with the proposed Project would not be experienced disproportionately by an EJ population.

There are no special issues, such as housing, transportation access, or resource use in the Project area that would affect the environmental justice population disproportionately.

4.10.2 Wet-Cooled Alternative

Impacts to EJ from construction and operation of a wet-cooled solar plant would be similar to the impacts described for the Proposed Action (dry-cooled alternative).

4.10.3 No Action Alternative

Under the No Action Alternative, the right-of-way would not be granted. No project-associated impacts would occur to minority or low-income populations under the No Action Alternative.

4.10.4 Mitigation

No mitigation is required.

4.11 Land Use, Recreation, Transportation, and Access

The following section describes the potential impacts of construction and operation of the proposed Project on land use, recreation, and transportation and access within their respective ROI, as defined in Chapter 3. The impact analysis for these areas is based on review of the existing conditions and focuses on the following issues: the conformity of the proposed Project with federal and local land use plans, ordinances, and policies; and the potential for the Project to have direct and/or indirect land use, recreation, transportation, and access conflicts with existing and planned uses.

4.11.1 Proposed Action

4.11.1.1 Existing Land Use

The Project area is within the boundary of the Amargosa Valley Area Planning area; however, land requested under the Proponent's right-of-way application is entirely on public land under the jurisdiction of the BLM Pahrump Field Office. The Project area is adjacent to a low density residential area east of Sandy Lane. Smaller rural residential areas are located west of the Project area. The Proponent intends to realign Amargosa Farm Road either 250 feet or 0.25 mile south of the existing roadway, based on final engineering design. Approximately 7,000 acres of primarily undisturbed BLM desert land, currently designated as disposal areas, will be converted to utility-related uses.

No residential, commercial, industrial, or institutional uses are located within the Project area. The nearest school is approximately 1 mile from the Project area. The proposed Project will have long-term direct impacts on potential uses of BLM land within the Project area by removing public land available for disposal and dispersed recreation. Indirect impacts to recreation on public land are discussed in detail in the visual resources section of this EIS.

Minimal impacts to existing land uses, including the realignment of Amargosa Farm Road, are expected from the proposed Project.

4.11.1.2 Future Land Use

The Project area is located within an area designated by the Amargosa Valley Area Plan as a Special Development Area. The term Special Development Area is a mixed-use designation to set aside public or private areas where a variety of land uses might be proposed for approval, including projects under review by the BLM, such as Solar Energy Facilities (Amargosa Valley Area Plan Committee 2009).

Impacts to future land use include the change of land use identified by the Amargosa Valley Area Plan from future residential use south of Amargosa Farm Road, and east of Powerline Road to utility use. However, the Project is consistent with the policies, goals, objectives and land use descriptions set forth in the Amargosa Valley Area Plan as the designated Special Development Area permits the uses contemplated.

4.11.1.3 Transportation and Access

The construction of the proposed Project would have short-term direct impacts to the existing traffic load on existing roadways within the ROI. There would be an increase in vehicular traffic in relation to the existing traffic load and capacity of the street system. During construction of the proposed Project, the majority of workers are expected to commute from Las Vegas within Clark County, resulting in a direct increase in average daily traffic on US 95. Construction workers will commute as much as 2 hours to construction sites from their homes. Normal construction hours are expected to be between 8 a.m. and 6 p.m., Monday through Friday. Some activities may require extended evening construction hours and weekend work, as necessary, to meet the overall Project schedule.

During construction, access to the Project area will be via a new access road along the alignment of the T&T Road from US 95, from Amargosa Farm Road (via Valley View Boulevard) or from Powerline Road (via Anvil Road from NV 373). The proposed access road will be designed in accordance with Nye County Public Works standards, and the appropriate permits will be obtained from NDOT. As a part of the proposed Project, a portion of Amargosa Farm Road would be realigned. The proposed roadway alignment will be coordinated with Nye County Public Works and be constructed in conformance with the current standards. The locations of the principal site entry gates for both the construction and the commercial operating period will be evaluated in consultation with the BLM, NDOT, and Nye County Public Works to ensure ingress and egress from the site does not have adverse impacts on existing traffic flow patterns.

The average construction workforce is estimated at 650 individuals per day, resulting in an increase of approximately 1,300 average daily vehicle trips on US 95 or NV 373 if each worker drove alone to and from the Project site. Peak workforce levels are estimated at 1,300 individuals per day, resulting in an increase of approximately 2,600 average daily vehicle trips on US 95 if each worker drove alone to and from the Project site.

Traffic levels are expected to peak during month 17 of the 39-month construction period. Where the construction workers currently reside would determine patterns of traffic increase. Other roads in the vicinity of the Project area could potentially see increased traffic from workers travelling to and from the Project site to area services and other work-related activities.

The proposed Project is expected to employ a total of 180 workers during operation, or an estimated increase of 360 daily vehicle trips on US 95, if each work drove alone to and from the Project site.

Permanent changes to transportation networks would include improvement of the selected access road, as well as improvements on Amargosa Farm Road. There are no planned improvements to US 95 related to the proposed Project.

Short and long-term, direct and indirect impacts would result from the realignment of Amargosa Farm Road's right-of-way. Its construction would impact local residents of Amargosa Valley by restricting or rerouting access to areas served by the road during the construction of the re-alignment.

4.11.2 Wet-Cooled Alternative

Impacts to land use, recreation, transportation and access from construction and operation of a wet-cooled solar plant would be similar to the impacts described for the Proposed Action (dry-cooled alternative). It is anticipated that 4,600 afy will be required for the wet-cooled alternative. Water would most likely be acquired from existing agricultural use. The additional 4,200 afy needed over the Proposed Action would require that the fields currently being irrigated be fallowed. The Nevada State Engineer generally allots 5 afy/acre for irrigation. Therefore, under the wet-cooled alternative, approximately 840 acres in the Amargosa Desert Hydrographic Basin would be fallowed.

4.11.3 No Action Alternative

Under the No-Action alternative the Project would not be constructed, and there would be no impact to land use, recreation, or transportation.

4.11.4 Mitigation

No mitigation is required.

4.12 Visual Impact Assessment

The purpose of the visual impact assessment is to identify and characterize the level of visual impact resulting from the construction, operation, and maintenance of the proposed Project. Visual impact levels are derived by assessing the level of visual change associated with the physical elements of the proposed Project as compared to the existing setting.

Visual change is measured in terms of contrast and typically affects sensitive viewers, scenic quality, and compliance with the applicable agency visual management objectives. Contrast resulting from the proposed Project was assessed using a methodology consistent with the BLM's Manual 8431-1, Visual Resource Contrast Rating. Levels of potential contrast are largely based upon the perception of cleared vegetation, grading and topographical modifications, and the introduction of new facilities (structures) from sensitive viewing locations. The visual analysis also considered the presence of existing cultural modifications (i.e., transmission lines, industrial developments, primitive roads, etc.) and their effect on the landscape (see Figure 3-7). The following section describes the methodology used to measure potential visual impacts followed by the results of the impact assessment.

4.12.1 Visual Resource Impact Methodology

4.12.1.1 Contrast Level

The amount of visual contrast is based upon the level of modification to existing landscape character and provides the foundation for the visual contrast rating. In the context of the proposed Project, existing landscape character is defined by the visual characteristics (form, line, color, and texture) associated with the landform, vegetation, and existing facilities within, and adjacent to the Project area. Contrast typically results from (1) landform modifications that are necessary to prepare a project site for construction, (2) the removal of vegetation to construct and maintain facilities, and (3) the introduction of new above-ground facilities into the landscape.

Based on the definition of existing landscape character, the visual elements associated with the construction and operation of the proposed Project were compared to existing landscape character, resulting in levels of visual contrast as defined below (BLM 2007b). In some cases it was appropriate to identify a contrast level between two of the four levels. For example, the project may demand attention, but does not completely dominate the landscape from a given viewpoint. In this example the contrast level would be moderate/strong.

- Strong – The element contrast demands attention, will not be overlooked, and is dominant in the landscape.
- Moderate – The element contrast begins to attract attention and begins to dominate the characteristic landscape.
- Weak – The element contrast can be seen but does not attract attention.
- None – The element contrast is not visible or perceived.

4.12.1.2 Project Contrast and Scenic Quality

In the context of the impact assessment, project contrast is defined as the overall visual change to existing features of the landscape including landform, vegetation, and structures resulting from the construction and operation of a project. Levels of visual change can range from none to moderate to strong. As such, project contrast becomes the baseline line for assessing impacts to scenic quality and sensitive viewers.

Due the relatively large size of the proposed Project, impacts to scenic quality considered not only the Project area, but adjacent land as well. Typically, impacts to scenic quality are based on project contrast (overall visual change) resulting from the construction and operation of the proposed Project. The level of project contrast contributes to the modification of existing landscape character (setting); therefore, the landscape's inherent aesthetics may be reduced and impacts may occur. The visual elements (form, line, color, and texture) associated with three major components of the proposed Project (i.e., power block, solar collectors, and transmission line) were evaluated in context with the existing visual elements of the Project site (Class C – creosote flat) and the resulting level of impact was documented.

Sensitive Viewers

Impacts to sensitive viewers and their associated KOPs were identified using the following criteria:

- viewer sensitivity (high or moderate)
- distance of sensitive viewer from the Project (foreground, middleground, or background)
- viewing position (superior or inferior views)
- visibility (screened or backdropped views)
- Project contrast (overall visual change)

The consideration of these elements resulted in a contrast level rating, or level of perceptible Project contrast for each KOP, consistent with the BLM's VRM Manual H-8431-1, Visual Contrast Rating.

For sensitive viewers with level views of the proposed Project, as distance from the Project increases the perception of project contrast decreases due to the relatively low profile of the solar collecting arrays. The Project tends to be less dominant in the landscape because a level viewer would not see the overall surface of the solar collection fields, which based on the time of the day, produce strong color contrast by replicating the typically blue skies. Based on field observations, the different components of the Project, and typical climatic patterns for Amargosa Valley, Project-specific distance zones were identified within the framework of BLM-specified distance zones as specified below.

Distance Zones

As stated, Project-specific distance zones were generated within the framework of BLM criteria for moderate and high sensitivity viewers including:

- 0 to 0.25 mile – BLM Foreground Zone
- 0.25 mile to 1 mile – BLM Foreground Zone
- 1 mile to 3 miles – BLM Foreground Zone
- 3 to 5 miles – BLM Middleground Zone
- 5 miles and beyond – BLM Background Zone

Distance zones are critical in providing context for the proposed Project within the landscape. Within the foreground distance zone of 0 to 0.25 mile, the Project is in close proximity to the

viewer which, for a project of this scale, results in strong contrast. Within the context of Amargosa Valley, views of the Project within the 0.25 to 1 mile distance zone become screened by the typically large ornamental vegetation and residential/commercial construction to the east and south of the Project area. The low profile of the Project resembles the natural horizon line the farther the viewer is located from the Project site. The power blocks may be visible in this distance zone if unobstructed viewing conditions exist and the viewer is superior enough to see over the solar collecting arrays and 30-foot wind fence. However, due to the existence of cultural modifications in the landscape including, but not limited to, residential structures, existing utility lines, cell towers, etc., project contrast may be reduced if the Project is seen within the context of such cultural modifications.

In addition to distance, and in the context of solar projects, viewing position or elevation of the viewer as compared to the elevation of the project, influences the perception of Project contrast because viewers at higher elevations tend to see larger portions of the Project within the context of the existing setting. The strongest contrast element for the proposed Project is color associated with the mirrors which predominantly reflect the typically blue Mojave Desert sky. Conversely, sensitive viewers that are inferior to the Project (i.e., looking up at a project) would have reduced visibility of Project facilities; thus contrast is reduced. Other viewing conditions that contribute to contrast include screening (views that are blocked), backdropping (natural features behind the Project, typically darker than Project elements), and skylining (sky behind Project elements – typically providing a silhouette). Factors such as levels of visual contrast, distance zones, viewer sensitivity, and viewing conditions were considered in the determination and characterization of the level of perceived visual contrast.

Determination of Impacts

Sensitive viewer impacts consider the sensitivity of the viewer and the perception of project contrast based on distance and associated viewing conditions within the context of the existing setting. Using BLM form 8400-4 (Visual Contrast Rating Worksheet) perceived contrast was characterized and documented per BLM guidance. Perceived contrast was combined with viewer sensitivity, to determine visual impacts to sensitive viewers.

To represent and validate the range of potential visual impacts resulting from the construction and operation of the proposed Project, five photo simulations were prepared per BLM direction and are located in the following section. The simulations were prepared based on high-resolution photography and corresponding GPS data gathered during field investigations. The photographs were taken using a 50mm lens which best replicates the perspective and depth-of-field associated with the human eye. After the proposed KOP and simulation photographs were approved by BLM visual resource staff, the simulations were prepared using a proponent-provided 3D model of the proposed facilities combined with Project spatial data and 30-meter terrain models using a combination of GIS and Computer Aided Design (CAD). After construction of the 3D model associated with the Project, the Project model was combined or composited with the high-resolution photograph using a 3D rendering program. The location of the Project model in the photograph was validated using existing terrain and existing structure (distribution lines) data that was gathered during field investigations. The simulated model was then rendered using appropriate textures, lighting based on the time that the photographs were taken, and representative atmospheric conditions.

Compliance with VRM Classifications

Compliance with VRM classifications was assessed by evaluating project contrast as perceived by sensitive viewers and their associated KOPs (Table 4-29). Per BLM requirements, contrast rating sheets (BLM 2007b) were prepared from KOPs that demonstrate compliance with VRM classes (see Appendix D).

Table 4-29 Compliance with Agency Management Objectives

Contrast Level	VRM Class			
	I	II	III	IV
Strong	No	No	No	Yes
Moderate/Strong	No	No	Yes	Yes
Moderate	No	Yes	Yes	Yes
Weak/Moderate	No	Yes	Yes	Yes
Weak	Yes	Yes	Yes	Yes

4.12.2 Proposed Action

Structural facilities for the Project include solar collection fields which include two power blocks in the center of each solar field, and associated facility building at the south end of the solar field along Amargosa Farm Road. Construction of the proposed Project would require the removal of vegetation and land grading to achieve a level grade for the entire Project area. An existing local road (Amargosa Farm Road) would be realigned either 250 feet or 0.25 miles south of its current location for the length of the Project, with proposed buildings on both the north and south side.

4.12.2.1 Project Contrast

The proposed Project would introduce a moderate/strong level of project contrast resulting from the introduction of the solar fields, power blocks, and associated Project components (including perimeter drainage channel). The regular geometric forms and strong horizontal lines associated with the solar fields would occur as a result of clearing primarily creosote bush within the Project area and the construction of the solar arrays. At certain times of the day the blue reflection of the sky would strongly contrast in color with the surrounding landscape, which is predominately dark green (vegetation) to beige (soils and/or unpaved roads). The introduction of geometric and formal lines and forms associated with the power blocks would result in moderate/strong contrast when compared to the diagonal and angular lines associated with adjacent scenery (Funeral Mountains).

Overall, the construction and operation of the proposed Project would result in a moderate/strong level of project contrast; however, in the context of sensitive viewers, perceived contrast is anticipated to range from primarily weak to moderate because the proposed Project would:

- be located in primarily the middleground to background distance zone of sensitive viewers (exceptions include the residences east of Sandy Lane and Valley View Road)
- occur near existing modifications in the landscape (e.g., residential area, transmission lines, and other utility/industrial/agricultural facilities) that have locally modified the setting
- be constructed on land with minimal topographic variation occupied by primarily low growing, evenly spaced Mojave desert vegetation (i.e., creosote bush)
- occur at an elevation where viewers would have level (neutral) views of the Project; therefore, the majority of the Project would be screened by existing landscape features (i.e. vegetation, topography, municipal development, etc.)

In addition to project contrast associated with the proposed facilities, operation of the Project requires nighttime lighting for safety and security during routine maintenance of the solar panels. Project lighting would be designed to provide the minimum illumination needed to achieve safety and security objectives. Lighting would be shielded and oriented to focus illumination on the desired areas (predominately the power block), thus minimizing additional nighttime illumination in the site vicinity. The following results for the visual impact assessment are organized by scenic quality, sensitive viewer type, and VRM Class compliance.

Nighttime Lighting

Nighttime lighting conditions will be slightly brighter than the nearby developed gravel operations, which are the brightest point-source of nighttime lighting in the Project area; therefore, contrast is anticipated to be moderate/high from a regional context. The nighttime operations are anticipated to be lighting of the power block for operational safety and security purposes and occasional lighting for the cleaning of the mirrors. Project construction is anticipated to occur during normal Monday thru Friday daytime working hours; but if nighttime lighting is needed for construction, any lighting will be directed to the center of the construction area and would be shielded. The nighttime operations of the proposed Project are anticipated to introduce a new source of nighttime lighting to the local Project area; therefore, contrast is anticipated to be high on a limited basis.

Scenic Quality

The proposed Project would be located within a BLM-designated Class C landscape (see Figure 3-18) where primarily flat to low rolling topography is occupied by primarily low-growing creosote shrubs. The local setting has been modified by several existing distribution lines, residential and community services facilities, transportation routes, and agricultural fields. Regionally, industrial facilities such as Valley Substation to the south and the Johnnie substation to the southeast, several gravel mining facilities, and disbursed residential and community facilities have modified the setting by introducing vertical and horizontal structures into a primarily low profile landscape. Due to the large scale of the Project and the modifications required to construct the Project (i.e., removal of all vegetation where the solar fields are proposed), project contrast is anticipated to be moderate/strong; however, because the land in which the proposed Project would be located has been designated as Class C, and existing

landscape character has been modified by human development at both the local and regional levels, impacts to scenic quality are anticipated to be moderate.

Sensitive Viewers

Impacts to sensitive viewers are anticipated to range from predominately low, where moderate/strong project contrast would be imperceptible due to distance or screening, to limited areas of high, where high sensitivity viewers have unobstructed views of the Project in the foreground (0-.25 mile) distance zone. The regular geometric forms associated with the solar fields and dry-cooling system would contrast strongly with the irregular, organic forms associated with the landscape setting. In addition, color contrast associated with the solar arrays would vary throughout the day as the parabolic mirrors that comprise the arrays track the sun from east to west and reflect the typically blue sky. In limited situations, glare associated with the reflection of the sun would increase contrast and could occur based on viewer position (typically elevated above the project), angle of solar arrays, and atmospheric conditions. It is anticipated that sensitive viewers would have direct to screened views of the solar arrays at a vertical to near vertical position in the early morning (from the east) and late evening (from the west). Hence, the highest impacts are anticipated to occur during these times within the foreground (0 to 0.25) project specific distance zone. A 30-foot tall wind fence is proposed along the eastern and western perimeters; depending on final design and construction, the wind fence could reduce contrast by partially screening the views of the solar facility in the foreground distance zone. Viewers with a superior viewing position would likely perceive moderate/strong project contrast as compared to a level viewing condition. Thus, impacts for those viewers with superior viewing positions would be higher as compared to viewers at the same distance with a level viewing position. Impacts to sensitive viewers are described below.

Travel Routes

U.S. Routes

- **US 95 (KOP3, KOP 7)** – Contrast is anticipated to be weak/moderate for moderate sensitivity viewers traveling along US 95. The Project would be viewed from a level viewing position for a short duration in the middleground to background distance zone. At its closest point, the Project would be located approximately 5 miles from this travel route. Due to the low, horizontal nature of the solar arrays seen in context with the vast horizon lines associated with the Basin and Range, contrast would be weak. At certain times of the day, color contrast would increase as the solar arrays track the sun from west to east, and reflect the typically blue sky of the Great Basin. The cooling towers associated with the power blocks would be partially- to fully- skylined increasing contrast in form, color, and line as illustrated on Figure 4-5 A,B. Therefore, overall impacts are anticipated to range from low to moderate/low.

Existing Condition – View facing south-southeast from eastbound US 95 toward existing distribution lines and 230kV transmission lines

Simulated Condition – Proposed wind fence, solar fields, thermal energy storage tanks, 250 MW power blocks and associated transmission lines, switchyard, and maintenance building. Viewpoint is approximately 6.8 miles to nearest power block

Solar Millennium LLC

Amargosa Farm Road Solar Project
Key Observation Point Simulation 3
Figure 4-5A
DRAFT March 2010

Photo Date and Time: 12-14-09, 2:39 p.m. Solar Collector Angle: 40 degrees from vertical Atmospheric Conditions: Clear Focal Length: 50mm
Structure models that were used in the simulations were created using 3D Models provided by Solar Millennium, LLC.
This simulation represents the preliminary site plan dated 12-22-09, which will be refined and finalized throughout the NEPA process.

This page intentionally left blank.

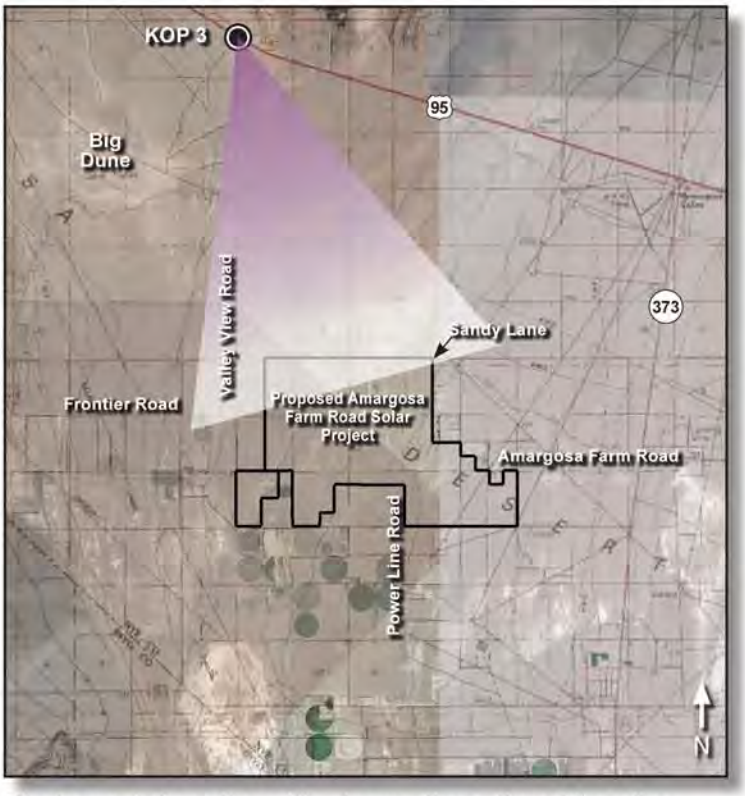

Photograph Location: Viewing south-southeast from the intersections of eastbound US 95 and Valley View Road, Amargosa Valley, Nevada.

Solar Collector Assembly

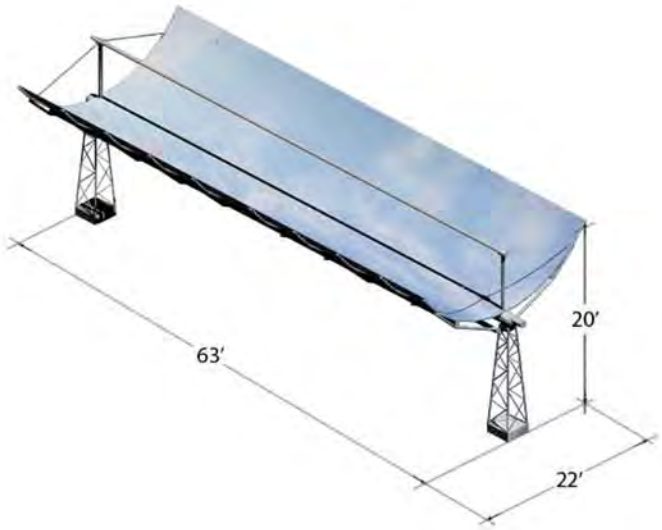

Typical Solar Collector Assembly based on 3D model provided by Solar Millennium, LLC. Measurements are approximate.

Solar Millennium LLC

epg

Amargosa Farm Road Solar Project
Key Observation Point Simulation 3
Figure 4-5B

Structure models that were used in the simulations were created using 3D Models provided by Solar Millennium, LLC.

DRAFT March 2010

State Highway Routes

- **NV 374 (see KOP 14)** – Contrast is anticipated to range from weak to weak/moderate for travelers using NV 374. The proposed Project would be located in the background distance zone (approximately 25 miles) from the viewer where atmospheric conditions and terrain reduce visibility. The reflective nature of the solar arrays would reflect the sky in the afternoon, resulting in a potential increase in contrast to weak/moderate. Based on these conditions, and the sensitivity of the viewer, impacts are anticipated to be low.

- **NV 160 (KOP 11)** – For moderate sensitivity travelers using NV 160, contrast would be weak with slightly superior views of the Project in the background distance zone (15+ miles). Atmospheric conditions may reduce visibility of the Project intermittently throughout the year. The Project would be partially screened by topography (unnamed hills approximately 8 miles from Project site), further reducing Project contrast. Therefore, impacts to this moderately sensitive travel route are anticipated to be low.

- **NV 373 (KOP 10)** – Contrast is anticipated to range from weak to weak/moderate for moderate sensitivity viewers returning from Death Valley Junction. The Project would be viewed from a level viewing position in the middleground (see KOP 10) to foreground distance zone(s). Visibility of the Project would be partially screened by topography and/or vegetation associated with residential land uses as travelers head north. Although portions of the solar fields and the taller power block components would be seen as travelers get closer to the Project site, existing residential structures, commercial development, town infrastructure (i.e., cell towers), and vegetation reduce Project contrast. Therefore, impacts to travelers using NV 373 are anticipated to range from low to low/moderate.

- **CA 127 (KOP 13)** – Contrast is anticipated to be weak for moderate sensitivity viewers using CA 127. The Project would be viewed from a level viewing position in the background (approximately 18 miles) distance zone. Visibility of the Project would be partially obscured by topography between the Project and the viewer, although the taller power block components could be perceptible on a clear day. Therefore, low impacts are anticipated.

- **Lathrop Wells Rest Park (KOP 2**) – Moderate Sensitivity viewers are anticipated to have level views of the Project in the background (5.5 miles) distance zone. The Project would be partially screened by topography and the out-buildings associated with the rest area based on the location of the viewer within the rest area. Farm-related structures are located between the rest area and the Project, which further reduces Project contrast. Impacts are therefore anticipated to be low as illustrated on Figure 4-6 A,B.

Existing Condition – Facing southwest from Lathrop Wells Rest Area toward NV 373, existing distribution lines, and the Funeral Mountains

Simulated Condition – Proposed 250 MW power blocks
Viewpoint is approximately 6.75 miles from nearest power block

Photo Date and Time: 12-14-09, 10:04 a.m. Solar Collector Angle: 15 degrees from vertical Atmospheric Conditions: Clear Focal Length: 50mm
Structure models that were used in the simulations were created using 3D Models provided by Solar Millennium, LLC.
This simulation represents the preliminary site plan dated 12-22-09, which will be refined and finalized throughout the NEPA process.

Solar Millennium LLC

epg

Amargosa Farm Road Solar Project
Key Observation Point Simulation 2
Figure 4-6A
DRAFT March 2010

This page intentionally left blank.

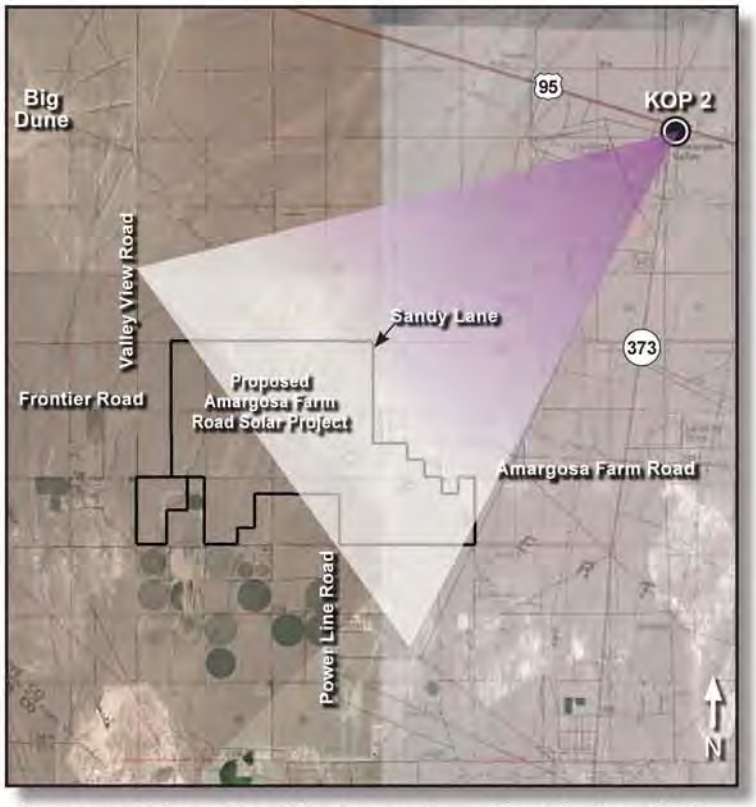

Photograph Location: Viewing southwest from Lathrop Wells Rest area on US 95 and NV 373, Amargosa Valley, Nevada.

Solar Collector Assembly

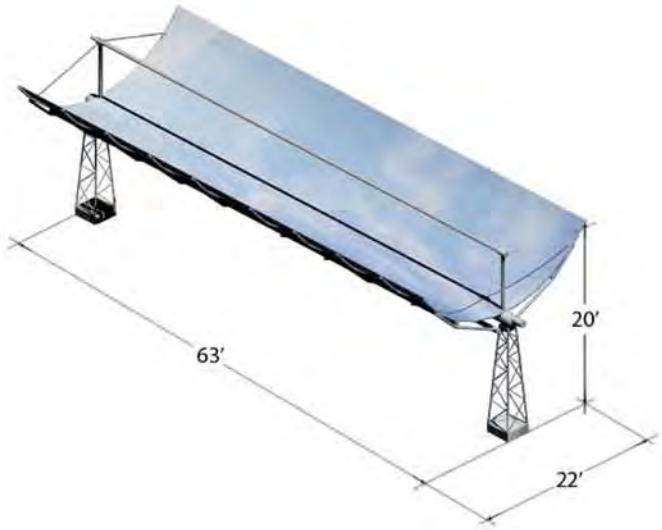

Typical Solar Collector Assembly based on 3D model provided by Solar Millennium, LLC. Measurements are approximate.

Solar Millennium LLC

epg

Amargosa Farm Road Solar Project
Key Observation Point Simulation 2
Figure 4-6B

Structure models that were used in the simulations were created using 3D Models provided by Solar Millennium, LLC.

DRAFT March 2010

Local Access Routes

- **Sandy Lane (see KOP 1) –** Moderate/Strong contrast is anticipated for the moderate sensitivity viewers that would have level views of the proposed solar fields, power blocks and their associated transmission lines, and wind fence in the foreground distance zone. The Project would be seen primarily by residents traveling to and from their homes along Sandy Lane with unobstructed views of the Project. The wind fence would be 30 feet tall and approximately 600 feet from the edge of the road, obscuring western views of the Funeral Mountains. The semi-transparent material of the wind fence would mute the color, line, and forms associated with the solar troughs throughout the day; therefore, Project contrast may be reduced. Based on the close proximity to the Project, high impacts are anticipated.

- **Amargosa Farm Road (KOP 6, KOP 9) –** Moderate/Strong contrast is anticipated for the moderate sensitivity viewers that would have level views of the proposed solar fields, power blocks , and administrative buildings in the foreground distance zone. Changes to landform and vegetation color and texture would be weak, and changes to vegetation line and form associated with the wind fence would be moderate from KOPs 6 and 9. However, as travelers head east or west respectively through the Project site (i.e., between administrative and maintenance buildings and the solar fields), landform, vegetation, and structure contrast would increase based on direct, unobstructed views into the proposed facility. Impacts, therefore, would be moderate/high based on the juxtaposition of the Project and the viewers.

- **Valley View Road** – Moderate/Strong contrast is anticipated for the moderate sensitivity viewers commuting to and from their residences. The Project would be located immediately to the east of the road within the context of Amargosa Valley. The power block, and more specifically the dry-cooling unit, would be visible above the wind screen, resulting in strong form and color contrast. Additionally, commuters, both north and south-bound, heading towards the Project in the foreground distance zone, would see the solar fields, as well as portions of the power blocks through the proposed chain link fence. Based on the close proximity and visibility of the Project, high impacts are anticipated to occur.

Recreation Areas

- **Ash Meadows Wildlife Refuge (KOP 12**) – The view from KOP 12 is inferior as compared to the Project site from this background distance zone (10 to 15 miles) view. The Project features would be screened from high sensitivity viewers due to topography and vegetation in the vicinity around the Ash Meadows NWR area, as well as topography changes between the Project and the KOP. The effect of the Project is expected to be weak from this view. Overall impacts are anticipated to be low.

- **Death Valley National Park** – There are no views anticipated for high sensitivity viewers with background views from the official recreation areas of the park due to complete screening from topography. Overall impacts are anticipated to be low.

- **Big Dunes (KOP 4)** – Weak/moderate contrasts are anticipated for moderate sensitivity users of the Big Dunes OHV area. Views of the Project would be unobstructed in the middleground distance zone (approximately 3.5 miles). The primary components that are discernable from this KOP are the dry-cooling units associated with the power blocks resulting in weak/moderate form and line contrast as illustrated on Figure 4-7 A,B. The solar fields and their associated transmission lines are backdropped by the Resting Spring Mountain and resemble the existing horizon line. Although the dry-cooling units are visible, the regional setting would still remain intact; therefore, impacts would be moderate/low.

- **Funeral Mountains Wilderness (KOP 15)** – The Project, as seen from KOP 15, the Funeral Mountains Wilderness, is expected to result in moderate contrast in the background distance zone (13 miles). Due to the north-south orientation of the solar troughs, the blue color that results from the reflection of the sky would be minimized except during mid-day hours. In addition, glare may occur late in the afternoon which would increase contrast for a limited time. The major power block elements would be seen, but their visual contrast would be reduced due to the distance, the power block's neutral color, and backdropping. Therefore, overall impacts are anticipated to be moderate.

- **Amargosa River ACEC** – The Project would not be visible from this ACEC; therefore, impacts would be minimal.

Residences

- **Valley View Estates (KOP 5)** – The Project would result in moderate/strong contrast within the foreground distance zone of high sensitivity residential viewers. Residences would have level, unobstructed views of the Project facility due to the flat character of the existing landscape and low-growing, evenly spaced vegetation.. Due to the large scale of the Project, structure contrast would be the dominant visual element. Specifically, views would comprise the solar fields and the top portion of the dry-cooling units as depicted in Figure 4-8 A,B. Views of these components would be partially muted by the opaque material associated with proposed wind fence. In addition to the moderate/strong contrast, construction and operation of the Project would partially to fully obstruct views of the Spring Mountains to the east-southeast from residences within Valley View Estates; and therefore, impacts are anticipated to be high.

- **Sandy Lane (KOP 1)** – The Project would result in moderate/strong contrast within the foreground distance zone from residences along Sandy Lane. Due to the close proximity of the Project to the residences (approximately 700 feet), the wind fence and solar fields would obscure the power block and associated dry-cooling unit although contrast in line, form, and color would still be evident. Additionally, existing views of the Funeral Mountains to the west would be dominated by the Project with line and form contrast being the dominant visual elements as depicted on Figure 4-9 A,B. Therefore, impacts to residences along Sandy Lane are anticipated to be high.

- **Residences East of Sandy Lane (KOP 8**) – Views of the Project from residences east of Sandy Lane would range from direct and unobstructed to completely screened in the foreground distance zone. Moderate/Strong contrast would be associated with those residences with unobstructed views of the project and therefore impacts would be high (similar to those residences along Sandy Lane). Contrast would be incrementally reduced for those residences whose views of the Project would be partially- to fully- screened by the dense ornamental vegetation typical of Amargosa Valley. Therefore, impacts are anticipated to range from low to moderate to high.

- **Residences south of Amargosa Farm Road –** Residences are sporadically located from 1 to 5 miles south of Project site. Generally, views of the Project would be partially- to fully-screened by the ornamental vegetation typical of Amargosa Valley. For those residences that do have views of the Project, structure contrast would be low/moderate because the proposed facilities would be seen in context with the different components of the existing setting (e.g., cell towers, residences, agricultural facilities, etc.) which have similar visual elements as compared to the Project. Therefore, overall impacts are anticipated to range from moderate/low to low based on the level of screening and the context in which the Project is seen.

Community Facilities

- **Amargosa Elementary School and adjoining Community Center** – Views of the Project for this moderate sensitivity viewing location are anticipated to be partially to fully screened in the foreground distance zone (1 mile). Dense vegetation around residences to the west of the school would reduce the perception of project contrast. Impacts, therefore, are anticipated to be low/moderate.

- **Community Park, Amargosa Senior Center, and AVIA Community Center** – Viewers from these locations would have partially screened to screened views of the Project based on the occurrence of vegetation, residences, and community facilities. Views of the Projects ancillary facilities proposed along Amargosa Farm Road, including the switchyard, administrative building, and assembly hall could be direct and unobstructed. However, contrast associated with these facilities is anticipated to be weak/moderate, because the visual elements associated with these features would be similar to existing features found within the town of Amargosa Valley. Moderate contrast would occur in those locations that the dry-cooling units would be visible. Therefore, impacts would range from low to moderate based on the visibility of the aforementioned Project components.

Existing Condition – View facing southeast from Big Dune Recreational Area

Simulated Condition – Proposed wind fence, solar fields, thermal energy storage tanks, 250 MW power blocks and associated transmission lines, and switchyard
Viewpoint is approximately 5.0 miles to nearest power block

Photo Date and Time: 12-14-09, 2:51 p.m. Solar Collector Angle: 40 degrees from vertical Atmospheric Conditions: Clear Focal Length: 50mm
Structure models that were used in the simulations were created using 3D Models provided by Solar Millennium, LLC.
This simulation represents the preliminary site plan dated 12-22-09, which will be refined and finalized throughout the NEPA process.

Solar Millennium LLC

Amargosa Farm Road Solar Project
Key Observation Point Simulation 4
Figure 4-7A
DRAFT March 2010

This page intentionally left blank.

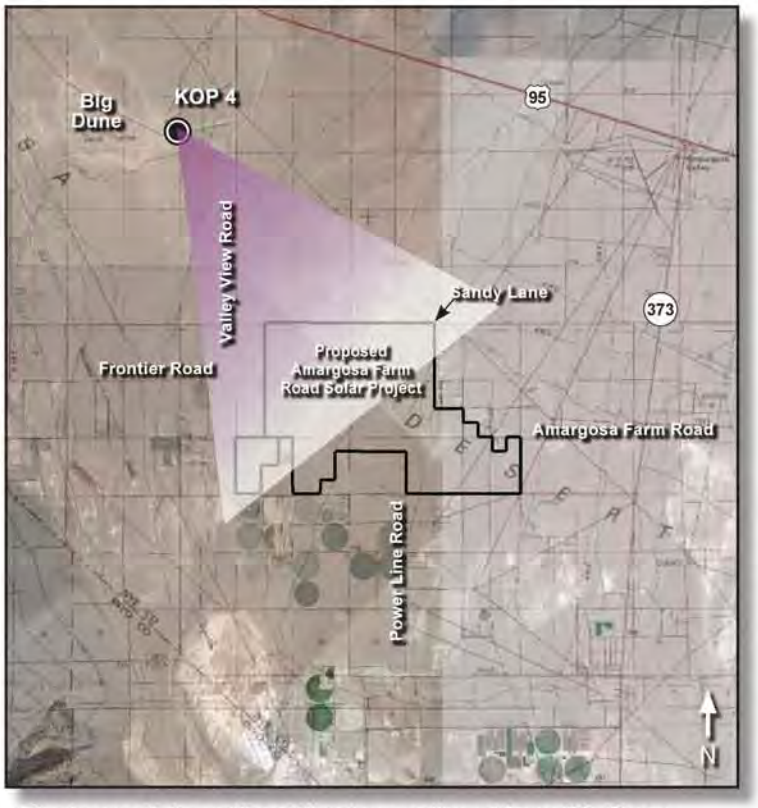

Photograph Location: Viewing southeast from Big Dune Recreational Area, 1 mile west of Valley View Road, Amargosa Valley, Nevada.

Solar Collector Assembly

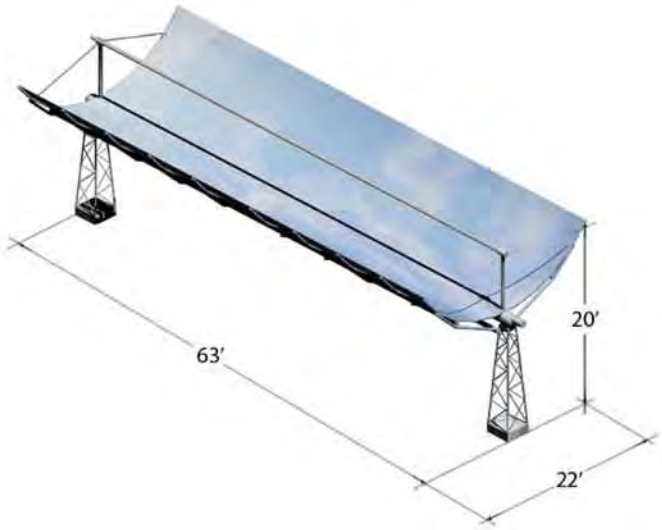

Typical Solar Collector Assembly based on 3D model provided by Solar Millennium, LLC. Measurements are approximate.

Solar Millennium LLC

epg

Amargosa Farm Road Solar Project
Key Observation Point Simulation 4
Figure 4-7B

Structure models that were used in the simulations were created using 3D Models provided by Solar Millennium, LLC.

DRAFT March 2010

This page intentionally left blank.

Existing Condition – View facing east from Valley View Estates toward the existing distribution line and the Spring Mountains

Simulated Condition – Proposed wind fence (30 feet tall), solar fields, 250 MW power blocks and associated transmission lines
Viewpoint is approximately 0.25 mile from fence and 0.94 mile from power block

Solar Millennium LLC

epg

Amargosa Farm Road Solar Project
Key Observation Point Simulation 5
Figure 4-8A
DRAFT March 2010

Photo Date and Time: 12-14-09, 3:06 p.m. Solar Collector Angle: 40 degrees from vertical Atmospheric Conditions: Clear Focal Length: 50mm
Structure models that were used in the simulations were created using 3D Models provided by Solar Millennium, LLC.
This simulation represents the preliminary site plan dated 12-22-09, which will be refined and finalized throughout the NEPA process.

This page intentionally left blank.

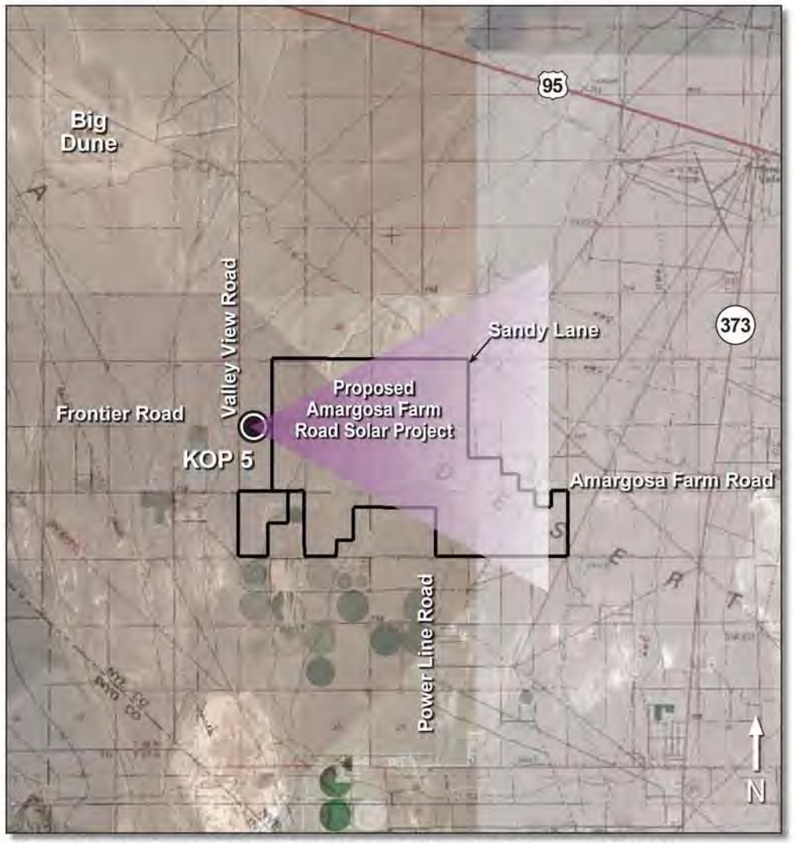

Photograph Location: Viewing east from Valley View Estates residential area at Frontier Road, 0.25 mile east from Valley View Road, Amargosa Valley, Nevada.

Solar Collector Assembly

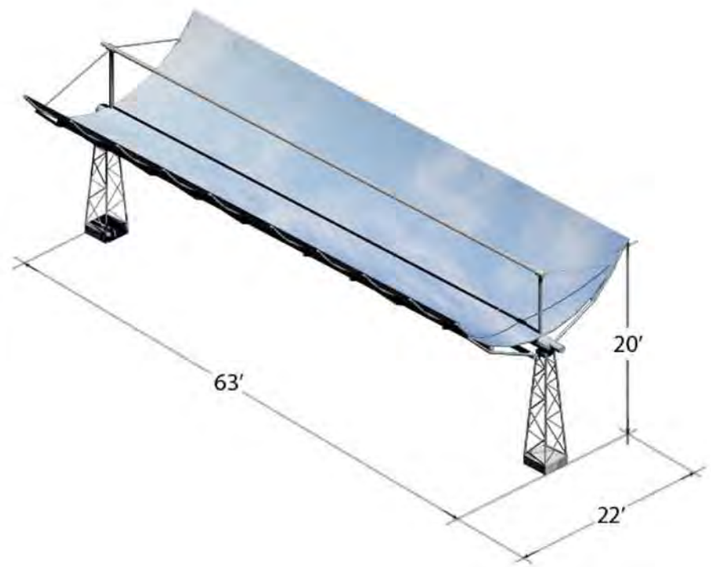

Typical Solar Collector Assembly based on 3D model provided by Solar Millennium, LLC. Measurements are approximate.

Solar Collector Assembly

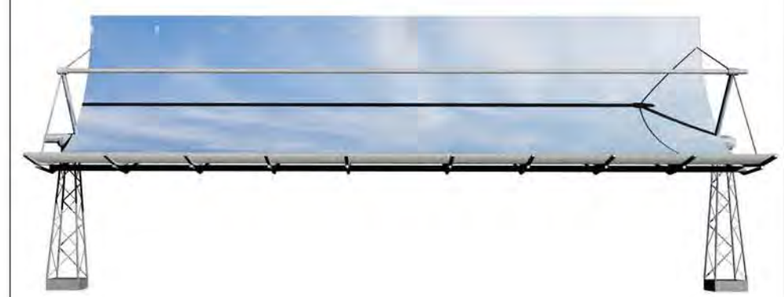

Typical Solar Collector Assembly based on 3D model provided by Solar Millennium, LLC. This solar collector's mirror is rotated to represent the angle of the mirrors shown in KOP 5 photograph.

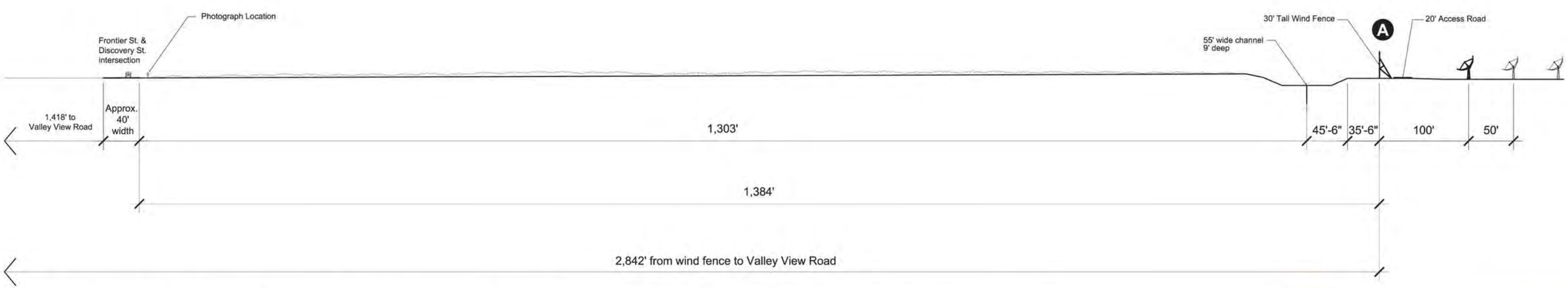

Cross Section – Frontier St. and Discovery St. intersection to perimeter channel, wind fence (30 feet tall), access road, and solar collectors

Solar Millennium LLC

Amargosa Farm Road Solar Project
Key Observation Point Simulation 5
Figure 4-8B
DRAFT March 2010

Photo Date and Time: 12-14-09, 3:06 p.m. Solar Collector Angle: 40 degrees from vertical Atmospheric Conditions: Clear Focal Length: 50mm
Structure models that were used in the simulations were created using 3D Models provided by Solar Millennium, LLC.
This cross section represents the preliminary site plan dated 12-22-09, which will be refined and finalized throughout the NEPA process.

This page intentionally left blank.

Existing Condition – Facing west from Sandy Lane Residential Area toward Sandy Lane, BLM lands, existing distribution line, and the Funeral Mountains

Simulated Condition – Proposed perimeter channel (screened by vegetation), wind fence (30 feet tall), solar fields, and thermal energy storage tanks

Viewpoint is approximately 720 feet from wind fence and 0.9 mile from nearest power block (obscured by solar fields and wind fence)

Photo Date and Time: 11-23-09, 10:33 a.m. Solar Collector Angle: 15 degrees from vertical Atmospheric Conditions: Clear Focal Length: 50mm
Structure models that were used in the simulations were created using 3D Models provided by Solar Millennium, LLC.
This simulation represents the preliminary site plan dated 12-22-09, which will be refined and finalized throughout the NEPA process.

Solar Millennium LLC

Amargosa Farm Road Solar Project
Key Observation Point Simulation 1
Figure 4-9A
DRAFT March 2010

This page intentionally left blank.

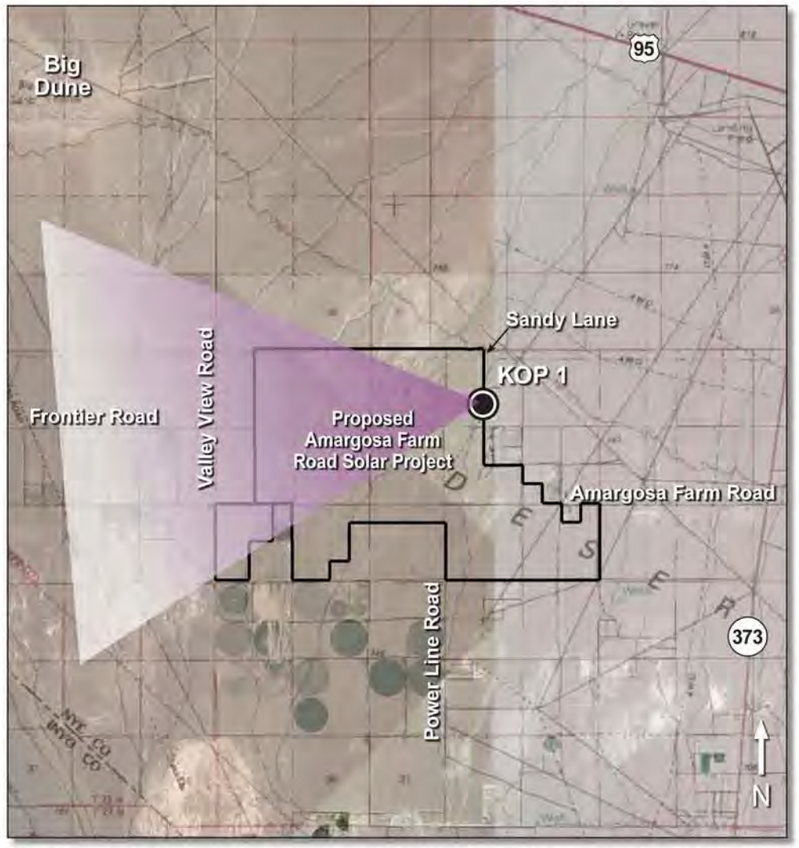

Photograph Location: Viewing west from a residential area at Sandy Lane, 0.32 mile north of Frontier Road, Amargosa Valley, Nevada.

Solar Collector Assembly

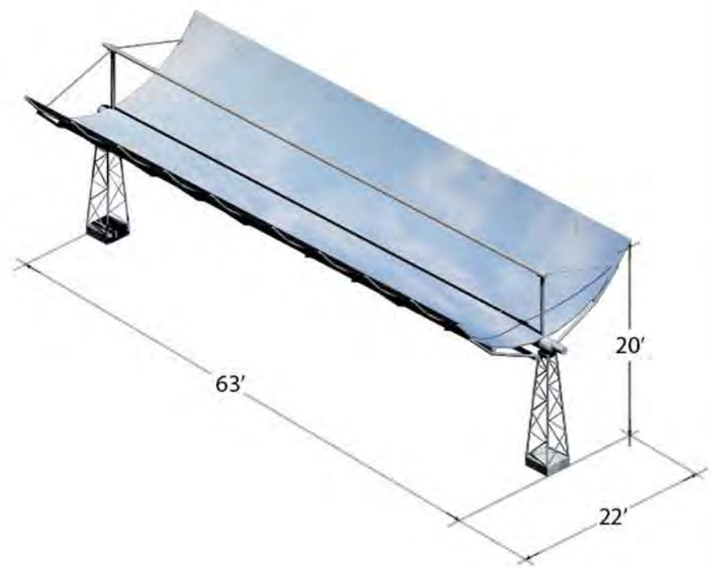

Typical Solar Collector Assembly based on 3D model provided by Solar Millennium, LLC. Measurements are approximate.

Solar Collector Assembly

Typical Solar Collector Assembly based on 3D model provided by Solar Millennium, LLC. This solar collector's mirror is rotated to represent the angle of the mirrors shown in KOP 1 photograph.

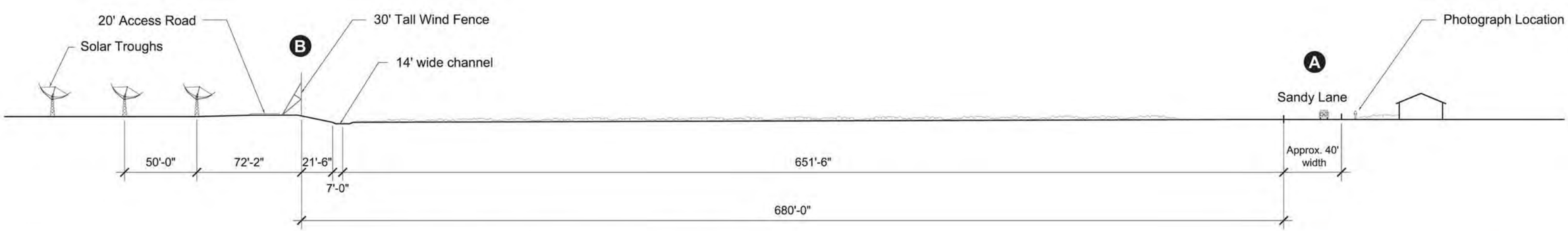

Cross Section – Sandy Lane to perimeter channel, wind fence (30 feet tall), access road, and solar collectors

Solar Millennium LLC

Amargosa Farm Road Solar Project
Key Observation Point Simulation 1
Figure 4-9B
DRAFT March 2010

Photo Date and Time: 11-23-09, 10:33 a.m. Solar Collector Angle: 15 degrees from vertical Atmospheric Conditions: Clear Focal Length: 50mm
Structure models that were used in the simulations were created using 3D Models provided by Solar Millennium, LLC.
This cross section represents the preliminary site plan dated 12-22-09, which will be refined and finalized throughout the NEPA process.

This page intentionally left blank.

Historic Features

- **Rhyolite and Rhyolite Cemetery (KOP 14)** – Contrast is expected to be weak in those locations in which the proposed Project would be visible in the background distance zone (25 miles). Viewers would have partially screened to screened views based on topography, although views would be from a superior vantage point. The Project would be completely backdropped due to the viewing angle, but the reflective nature of the solar mirrors could possibly be seen reflecting the sky in the afternoon which would raise contrast to weak/moderate for a short duration of time. An existing landfill is 0.5 miles east of the cemetery, which dominates the view towards the Project site. Impacts are anticipated to be low for viewers within both the Town of Rhyolite and the Rhyolite Cemetery.

4.12.2.2 Compliance with Visual Resource Management Objectives

The proposed Project would be located on BLM land designated as Class IV. Compliance with VRM objectives for Class IV designated land is anticipated because the proposed Project would be located in a Class IV landscape with the following management objective: *provide for management activities that require major modification of the existing character of the landscape. The level of change to the characteristic landscape can be high* (BLM 2007b). The contrast and resulting impacts identified through the visual assessment range from low in those locations that the Project would be screened or viewed in the background distance zone, to limited areas of high impacts where high sensitivity viewers would have direct, unobstructed views of the Project in foreground distance zone. These impacts and associated changes to landscape character are consistent with Class IV objectives; therefore, consistent with applicable planning documents.

4.12.3 Wet-Cooled Alternative

Impacts to visual resources under the wet-cooled alternative would be similar to those described for the Proposed Action (dry-cooling alternative) with the following exception. Contrast would be reduced for those KOPs with views of the dry-cooling unit associated with the Proposed Action, which include KOPs 1 thru 6, 9, 10, and 15, because the wet-cooling unit is at least half the height, and therefore less visible to sensitive viewers. High impacts would remain for residences located along Sandy Lane and within Valley View Estates; however, impacts would be reduced for all other identified sensitive viewers identified in section 4.12.1.2.

The wet-cooling alternative does have a periodic visual element in vapor plume. The Proponent has completed a desktop study looking at other similar projects, such as the Beacon Solar Energy Project's Application for Certification filing with the California Energy Commission.

4.12.3.1 Vapor Plume Analysis

Visible plumes that occur during daylight hours have the potential for producing an impact on visual resources. The Project's cooling tower is a potential source of visible water vapor plumes;

therefore, an analysis was performed to estimate the potential size and frequency of visible plume formation during daylight hours. The Seasonal and Annual Cooling Tower Impacts (SACTI, Version 9/30/90) model was applied for this analysis. The following subsection presents a quantitative analysis of the vapor plumes emitted from Project facilities. The modeling results for the vapor plume are shown in Table 4-30.

Table 4-30 Cooling Tower Daytime Vapor Plume Analysis Results

Plume Length Case	Length (ft)	Daytime Frequency (hrs/yr)[1]
Maximum	1,371	7
90 Percentile	958	128
50 Percentile	92	173

[1]Yearly average based on 3 years of data
Source: ENSR/AECOM 2008

4.12.4 No Action Alternative

The No Action Alternative would result in no Project related impacts to visual resources because no Project facilities would be constructed on BLM land.

4.12.5 Mitigation

- Color mitigation – Surfaces of all ancillary facilities that are visible to the public, excluding the solar arrays, will be treated with paint colors that blend with the surrounding landscape (‘desert’ browns and tans).
- Landscape Screening – Landscape screening may be used to reduce visibility of the project in locations that high sensitivity viewers have unobstructed foreground views of the project. This condition pertains to the residences located along Sandy Lane and just east of Valley View Road.
- Restoration of disturbed areas – Any temporary areas that are used during the construction process and are to be restored (vegetation, topographic).
- Nighttime Lighting – The Proponent shall consider location and type of lighting to minimize potential light pollution to the greatest extent practicable. Measures may include (but not be limited to) light hoods/shields, directional lighting, minimum required brightness, setbacks from project perimeter, and ‘as-needed’ usage.

4.13 Hazardous Materials, Hazardous and Solid Waste

The anticipated direct and indirect impacts from construction, operation, and maintenance of the proposed Project are addressed in the following sections.

As discussed in Section 2.0, Project Description, the proposed Project will be designed to meet all applicable standards to reduce the risk of an accidental release, operated in a manner that

complies with safety standards and practices, and maintained so as to provide a safe workplace for Project personnel and to prevent significant adverse off-site impacts to the public at large. In addition, construction and operation will incorporate up-to-date industrial technology and design standards, and adhere to regulatory health and safety codes and guidelines, as well as established good industrial practices. Training, operating, inspection, and maintenance procedures that will minimize the risk and severity of potential upset conditions will be implemented.

4.13.1 Proposed Action

4.13.1.1 Construction Phase

Hazardous materials that are anticipated for use during construction include gasoline, diesel fuel, oil, lubricants, welding gases (e.g., acetylene, oxygen, and argon), and small quantities of solvents and paint. There are no feasible alternatives to these materials for operating construction vehicles and equipment, and conducting other construction activities such as welding. No acutely hazardous substances will be used or stored on-site during construction.

Diesel fuel is the hazardous material with the greatest potential for environmental consequences during the construction phase due to the volume of diesel fuel that will be used in construction equipment and the frequent refueling that will be required. To minimize the potential for a release, diesel fuel will not be stored on-site, except in equipment/vehicle fuel tanks. When refueling is required, a mobile fuel truck will be brought on-site to fuel each piece of equipment. The fueling will be supervised by both the fuel truck and equipment operators. Any fuel spilled will be promptly cleaned up, and any contaminated soil disposed of in accordance with the applicable state and federal requirements.

Small volumes of hazardous materials will be temporarily stored on-site inside fuel and lubrication service trucks. Paints and solvents will be stored in flammable material storage cabinets. Welding gases will be stored in steel cylinders and chained upright to a solid support structure, with the safety cover over the valve when not in use to prevent damage. Maintenance and service personnel will be trained in handling these materials. The most likely incidents involving these hazardous materials would be associated with minor spills or leaks. Impacts to site workers, the public, or the environment due to a minor spill or leak will be mitigated through the emergency response training program and procedures that will be implemented by Project construction contractors and employees, and by thoroughly cleaning up minor spills as soon as they occur.

Soil contaminated by a spill or leak will be disposed in accordance with applicable state and federal requirements. Minimal risk for fire and/or explosion exists with the use of these types of materials in the limited quantities expected. There is minimal potential for environmental impacts from incidents involving other hazardous materials during construction.

4.13.1.2 Operational and Maintenance Phase

Hazardous materials will be used and stored on-site during operations and maintenance. The hazardous material inventory, the general operational safety practices employed during hazardous material storage and use, the material-specific handling practices, and the toxicity of each hazardous material are discussed below.

4.13.1.3 Hazardous Material Inventory

A list of the large-quantity hazardous materials stored and used at the Project site along with the toxicity and storage practices for each material is provided in Table 4-31. The quantities identified in the table are per power block. For the purpose of this discussion, "large quantity" is defined as those chemicals stored or used in excess of 55 gallons for liquids, 500 pounds for solids, and 200 cubic feet for compressed gases. In addition to the chemicals listed in Table 4-31, small quantities (less than 55 gallons, 500 pounds, or 200 cubic feet) of janitorial supplies, office supplies, laboratory supplies, paint, degreasers, herbicides, pesticides, air conditioning fluids (chlorofluorocarbons), gasoline, hydraulic fluid, propane, and welding rods typical of those purchased from retail outlets may also be stored and used at the Project site. These materials will be stored in the maintenance warehouse or office building. Flammable materials (e.g., paints, solvents) will be stored in flammable material storage cabinet(s) with built-in containment sumps.

The remainder of the materials will be stored on shelves as appropriate. Due to the small quantities involved, the controlled environment, and the concrete floor of the warehouse, a spill can be cleaned up without significant environmental consequences.

4.13.1.4 General Operating Practices

Chemicals will be stored or processed in vessels or tanks specifically designed for their individual characteristics. All hazardous materials storage or process vessels will be designed in conformance with applicable ASME codes. Large quantity (bulk) liquid chemicals will be stored outdoors in ASTs manufactured of carbon steel or plastic, or in 400-gallon (nominal) capacity plastic totes, if applicable.

Spill containment structures (e.g., curbing, double-walled tanks or equivalent) to contain the chemicals in the event of a leak or spill will be constructed around each of the large-quantity hazardous chemical storage tanks or totes. Bulk storage tanks or totes will have secondary containment structures capable of holding the tank or tote volume plus an allowance for precipitation (25-year, 24-hour rain event). Concrete containment structures will be coated with a chemical resistant coating (e.g., epoxy) to ensure long-term integrity of the containment structure.

Small quantity chemicals will be stored in their original delivery containers in order to minimize risk of upset. Personnel working with chemicals will be trained in proper handling technique and in emergency response procedures for chemical spills or accidental releases. Appropriate PPE will be provided.

Table 4-31 Chemical Inventory and Estimated Usage Rates

Hazardous Material and CAS No.[1]	Relative Toxicity[2] and Hazard Class	Permissible Exposure Limit (PEL)	Storage Description; Capacity	Storage Practices and Special Handling Precautions
LPG CAS No. 68476-85-7 Propane CAS No. 74-98-6	Low toxicity; Hazard class – Flammable gas	PEL: 1,000 parts per million	On-site storage, up to 36,000 gallons in storage tanks and piping; pressurized carbon steel tanks and pipelines for delivery to equipment	Tanks and piping will be designed to fire code and NFPA specifications and operated to industry standards
Sulfuric Acid, 29.5% solution CAS No. 7664-03-9	High toxicity; Hazard class – Corrosive, water reactive	PEL: 1 mg/m^3	Contained in batteries; 2,000 gallons total inventory	Isolated from incompatible chemicals and secondary containment
Carbon Dioxide CAS No. 124-38-9	Low toxicity; Hazard class – Non flammable gas	TLV: 5,000 ppm (9,000 mg/m^3) TWA	Carbon steel tank, 15 tons maximum on-site inventory	Carbon steel tank with crash posts
Therminol VP-1 Diphenyl ether (73.5%) CAS No. 101-84-8 Biphenyl (26.5%) CAS No. 92-52-4	Moderate toxicity, Hazard class – Irritant; Combustible Liquid (Class III-B)	Biphenyl = PEL: 0.2 ml/m^3 (8-hr TWA) TLV: 0.2 ml/m^3 (1 mg/m^3) (8-hr TWA) Diphenyl ether = TLV: 1 ml/m^3(8-hr TWA) TLV: 2 ml/m^3(15-min TWA) PEL: 1 ml/m^3 (7 mg/m^3) (15-min TWA)	1.5 MM gallons in system, no additional on-site storage.	Continuous monitoring of pressure in piping network; routine inspections (sight, sound, smell) by operations staff; isolation valves throughout piping network to minimize fluid loss in the event of a leak; prompt clean up and repair.
Lube Oil CAS No. 64742-65-0	Low toxicity Hazard class – NA	None established	Carbon steel tanks, 10,000 gallons in equipment and piping, additional maintenance inventory of up to 550 gallons in 55-gallon steel drums.	Secondary containment for tank and for maintenance inventory
Mineral Insulating Oil CAS No. 8042-47-5	Low toxicity Hazard class – NA	None established	Carbon steel transformers; total on-site inventory of 32,000 gallons	Used only in transformers, secondary containment for each transformer

Table 4-31 Chemical Inventory and Estimated Usage Rates

Hazardous Material and CAS No.[1]	Relative Toxicity[2] and Hazard Class	Permissible Exposure Limit (PEL)	Storage Description; Capacity	Storage Practices and Special Handling Precautions
Diesel Fuel CAS No. 68476-34-6	Low toxicity; Hazard class – Combustible liquid	PEL: none established TLV: 100 mg/m^3	Carbon steel tank (300 gallons)	Stored only in fuel tank of emergency engine, secondary containment.
Nitrogen (Liquid) CAS No. 7727-37-9	Low toxicity; Hazard class – Non flammable gas	None established	Carbon steel tank; 80,000 pounds total inventory (2 full tanker trucks)	Carbon steel tanks with crash posts
Hydraulic fluid CAS No. 64741-89-5	Low to moderate toxicity; Hazard class – Class IIIB combustible liquid	TWA (oil mist): 5 mg/m^3 STEL: 10 mg/m^3	Carbon steel tanks and sumps; 500 gallons in equipment, maintenance inventory of 110 gallons in 55-gallon steel drums	Found only in equipment with a small maintenance inventory. Maintenance inventory stored within secondary containment.
Calcium Hypochlorite 100% CAS No. 7778-54-3	Moderate toxicity; Hazard Class – Corrosive, Irritant	PEL: None established Acute oral toxicity (LD50): 850 mg/kg (Rat)	Minimal on-site storage for water treatment; Not expected to exceed 50 lbs	Inventory management, isolated from incompatible chemicals
Oxygen Scavenger Reagent Acetic Acid 60% CAS No. 64-19-7 Iodine 20% CAS No. 7553-56-2 De-ionized water 20% CAS No. 7732-18-5	Moderate toxicity; Hazard Class – Corrosive, Irritant	 PEL: 10 ppm TWA PEL: 0.1 ppm N/A	Minimal on-site storage for water treatment; Not expected to exceed 50 lbs	Inventory management, isolated from incompatible chemicals
Welding gas Acetylene CAS No. 74-86-2	Moderate toxicity; Hazard class – Toxic	PEL: none established	Steel cylinders; 200-cubic-foot each, 800-cubic-foot total on-site	Inventory management, isolated from incompatible chemicals

Table 4-31 Chemical Inventory and Estimated Usage Rates

Hazardous Material and CAS No.[1]	Relative Toxicity[2] and Hazard Class	Permissible Exposure Limit (PEL)	Storage Description; Capacity	Storage Practices and Special Handling Precautions
Welding gas Oxygen CAS No. 7782-44-7	Low toxicity; Hazard class – Oxidizer	PEL: none established	Steel cylinders; 200-cubic-foot each, 800-cubic-foot total on-site	Inventory management, isolated from incompatible chemicals
Welding gas Argon CAS No. 7440-37-1	Low toxicity; Hazard class – Nonflammable gas	PEL: none established	Steel cylinders; 200-cubic-foot each, 800-cubic-foot total on-site	Inventory management
Activated Carbon CAS No. 7440-44-0	Non-toxic (when unsaturated), low to moderate toxicity when saturated, depending on the adsorbed material; Hazard class – combustible solid	TWA (total particulate): 15 mg/m^3 TWA (respirable fraction): 5 mg/m^3 TLV (graphite, all forms except graphite fibers): 2 mg/m^3 TWA	Used in two x 2,000-lb canisters, 4,000 pounds total inventory, no additional storage	No excess inventory stored on-site, prompt disposal when spent
Herbicide Roundup® or equivalent CAS No. 38641-94-0	Low toxicity; Hazard class – Irritant	Isoproplyamine salt of glyphosphate = no specific occupational exposure has been established	No on-site storage, brought on-site by licensed contractor, used immediately	No excess inventory stored on-site

[1] Low toxicity is used to describe materials with an NFPA Health rating of 0 or 1. Moderate toxicity is used describe materials with an NFPA rating of 2. High toxicity is used to describe materials with an NFPA rating of 3. Extreme toxicity is used to describe materials with an NFPA rating of 4.

[2] NA denotes materials that do not meet the criteria for any hazard class defined in the 1997 Uniform Fire Code.

Appropriate safety programs will be developed to address hazardous materials storage and use, emergency response procedures, employee training requirements, hazard recognition, fire safety, first aid/emergency medical procedures, hazardous materials release containment/control procedures, hazard communications training, PPE training, and release reporting requirements. These programs include a fire response program, a plant safety program, and facility standard operating procedures.

The facility will be subject to the SWPPP requirements administered by NDEP, Bureau of Water Pollution Control under the Stormwater General Permits for construction and industrial activities. The site-specific SWPPP will describe the management practices in place at the facility (e.g., regular inspections and maintenance of drainage facilities, employee training in proper hazardous material storage and handling procedures, and chemical spill response procedures) to prevent the release or discharge of hazardous materials to the waters of the State.

4.13.1.5 Chemical-Specific Operating Practices and Chemical Toxicity

Substance-specific operating practices and toxicity issues are described in the following paragraphs.

Fuel Gas Delivery

LPG will supply gas to boilers used for rapid daily plant startup and for HTF freeze protection. There will be two truck deliveries each week for both power plant units. A total of approximately 18,000 gallons of LPG will be stored at each power plant unit. LPG consists mainly of propane and butane. LPG is a flammable gas with a NFPA hazard rating of 4 with low toxicity. The fuel gas supplier will comply with all DOT regulations that apply to the transport of hazardous substances.

Compressed Gas Storage

Compressed gases stored and used at the facility may include gases typically used for maintenance activities, such as shop welding. These gases include acetylene, argon, and oxygen.

Acetylene is a flammable gas. It is highly reactive, however, it is not toxic. Oxygen is an oxidizer with low toxicity. Argon has low toxicity but may cause asphyxiation if released in a confined area. The potential impacts presented by the use of these gases at the Project are less than significant based on the following site-specific conditions:

- Compressed gases will be stored in standard compressed gas cylinders at the facility (typically 200 cubic feet per cylinder), and the total quantity will be kept to the minimum required for operation and maintenance.

- The compressed gases will be delivered and stored in DOT-approved safety cylinders, and secured to a solid support (such as a building or rack) to prevent tipping and physical damage.

- The compressed gases will be stored in an isolated storage area surrounded by crash posts to minimize potential for accidents or upset.
- Incompatible gases (e.g., flammable gases and oxidizers) will be stored in separate, isolated areas.
- Operators will be trained in the proper use of equipment and materials.

Water Treatment Chemicals

For the dry-cooled plant alternative, water treatment chemicals will be present in minimum quantities. Calcium hypochlorite and oxygen scavenger reagent are water treatment products that will be used in the boiler makeup water and auxiliary cooling tower application. Approximately 50 pounds of these products will be stored on-site and shipped to the site as required. Shipping and storing the products in the same container minimizes chemical transfers, and thus minimizes the chances of a spill. The toxicity of each mixture is moderate and they are classified as irritants and corrosives.

Under the wet-cooled plant alternative, water conditioning chemicals would be mixed with the makeup water to minimize corrosion and inhibit mineral scale formation. In addition to other water conditioning additives, sulfuric acid will be fed into the circulating water system for alkalinity reduction to control the tendency for mineral scaling in the circulating water. The sulfuric acid is supplied in an amount proportional to the circulating water makeup flow. All water conditioning additives will require separate storage tanks and metering equipment. For the sulfuric acid system, which is the chemical added in the largest quantities, the feed equipment would consist of a bulk storage tank and two acid metering pumps.

HTF

HTF is a synthetic hydrocarbon liquid mixture of diphenyl ether and biphenyl oxide. Dowtherm A, Solutia VP-1, and Therminol VP-1, are commercial products that have been used in concentrated solar trough plants to date. At present, the Proponent has indicated they intend to use Therminol VP-1 in the solar array and steam cycle of the proposed Project. The diphenyl/biphenyl oxide mixture is not classified as a hazardous material by the USDOT, nor is it listed under EPA CERCLA regulations. However, this material, when discarded, may be a hazardous waste as that term is defined by RCRA, 40 CFR 261.24, due to its toxicity characteristic. Biphenyl has a CERCLA Reportable Quantity of 100 lbs—the amount present in approximately 377 lbs (42 gallons) of Therminol. Therminol VP-1 is low odor, moderately toxic, a skin irritant, and a Class III-B combustible liquid.

Approximately 8,300 tons of HTF will be present in the heat transfer system, including the piping and necessary expansion tanks; no additional HTF will be stored on-site. The heat transfer system is a closed loop and the system pressure will be monitored continuously. The solar field will be regularly monitored by the operations staff using sight, sound, and smell to detect system leaks. Isolation valves will be installed throughout the solar field to minimize HTF loss in the event of a system leak. The isolation valves will be designed for automated operation triggered

by a pressure drop in the system, or manual operation if a leak is detected by other means. The Project is considering remote sensing equipment to allow for the detection of sudden large leaks. Leaks will be repaired promptly, and fluid spills will be cleaned up immediately.

Petroleum Products

Lube oil is stored in a 10,000-gallon carbon steel tank and in equipment and piping associated with each steam turbine. The turbine enclosure provides secondary containment sufficient to hold the full contents of the tank. The tank will be inspected daily to ensure that it is not leaking. Lube oil has low toxicity and does not meet the criteria for any hazard class defined by the Uniform Fire Code Diesel fuel will be used to fuel the emergency fire water pump engine. The fire water pump engine has a 300-gallon fuel supply in a carbon steel tank. The equipment skid provides secondary containment that can hold the full amount of the fuel. Diesel is a combustible liquid with low toxicity.

Insulating oil is used in the electrical transformers at the facility. The total quantity of insulating oil present at the facility will be 32,000 gallons. Each transformer is installed in a secondary containment structure that will contain 100 percent of the transformer capacity plus an allowance for precipitation.

Activated Carbon

The HTF expansion tank will be vented through a two-stage activated carbon system for the control of air emissions from the tank. Each stage of the system is comprised of a 2,000-lbs capacity carbon canister. The facility will not maintain an inventory of additional carbon. New activated carbon has low toxicity; however, once in use, the activated carbon will adsorb VOC and toxic air contaminants (TAC), including benzene, diphenyl ether, and biphenyl, and the toxicity will increase. Activated carbon is difficult to ignite, but will smolder once ignited.

The emissions control system will be monitored periodically (with a frequency specified in the air operating permit) to determine the saturation level of the carbon. When saturated with VOC and TAC, activated carbon is disposed of as a hazardous waste.

Herbicide

Herbicide will be used in the solar field to kill weeds in order to minimize the fire potential. The Applicants plan to contract the weed control program to an outside contractor. Accordingly, herbicide will not be stored on site but will instead be brought on-site on an as-needed basis. The Project will ensure that the contractor has the appropriate licenses and a robust safety program for its employees.

4.13.1.6 Hazardous Material Transportation

Hazardous materials will be delivered to the Project site via truck along US 95 and then into the gated and fenced site via the Project access road. US 95, is a major north-south transportation

route through Nevada and is currently used for the transport of hazardous materials; the Project will cause a small increase in hazardous material traffic along this route.

4.13.1.7 Off-site Consequence Analysis

The propane storage tanks and handling facilities will be equipped with continuous tank level monitors, temperature and pressure monitors and alarms, and excess flow and emergency island valves. Only trained technicians will conduct system maintenance and repairs.

Delivery

Propane is typically delivered in 5,000-gallon tank trucks. The tank trucks will be unloaded in an unloading area immediately adjacent to the propane tanks. The unloading area will be paved with concrete and curbed. During unloading operations, the driver performing the unloading operation will wear appropriate protective equipment, and will have a cut-off switch to stop the propane transfer in case of an emergency. The offloading operation will also be monitored by a control room operator via camera to provide backup support if there is a leak, hose break, or other accident during unloading.

With respect to the transport of propane to the Project site, DOT regulations require all truck tank trailers to meet strict requirements for collision and accident protection. Hazardous materials shipments will comply with applicable regulations in terms of route selection, operator training and qualifications, etc.

The tank trucks are designed to withstand violent accidents without breach of containment.

Storage

Storage of propane in an 18,000-gallon tank at each unit creates the potential for leak, spill, or rupture of the tank, releasing propane to the atmosphere. Propane is a flammable gas. Pressurized metallic storage tanks have a mean time to catastrophic failure of 0.0109 per million hours of service, or on average one failure every 10,500 years. Thus, failure of a pressurized propane tank during the lifetime of the facility is unlikely. Additionally, the storage tank will be protected by concrete curbing and steel columns to reduce the likelihood of accidental vehicle impacts.

4.13.1.8 Fire and Explosion Risks

The proposed Project will utilize two materials that pose potential risks of fire and explosion because of their flammability. These are propane and HTF, each of which is discussed below. Propane will be used as a fuel for the two boilers at the facility and poses a fire and/or explosion risk as a result of its flammability. Propane will be delivered to the site weekly by trucks owned and operated by a licensed vendor and will be stored on-site in an 18,000-gallon AST at each power block. The HTF at high temperatures can also present a fire hazard.

4.13.1.9 Seismic Risk

The possibility exists that an earthquake could cause the failure of a hazardous materials storage tank or HTF piping somewhere in the solar field. An earthquake could also cause the failure of the secondary containment system (berms and dikes), as well as electrically controlled valves and pumps.

The failure of all these preventive control measures might then result in a leak or discharge of hazardous materials. Due to the limited types and quantities of hazardous materials to be stored on-site and the sparsely inhabited surroundings, it is unlikely that hazardous materials could move off the site and impact residents and workers in the surrounding area.

The piping in the solar array contains the vast majority of the HTF and the solar field will not be constructed with secondary containment. However, it is very unlikely that an earthquake could cause the failure of the piping in the solar array, resulting in a loss of HTF that would have an off-site impact.

The piping in the solar array will be specifically constructed to allow movement due to thermal expansion – the steel piping in the mirrored trough sections of the array is connected to the HTF distribution headers with ball joints and the piping is not rigidly mounted to foundations or other structures. Furthermore, the solar array will be constructed with isolation valves to limit the HTF losses in the event of a piping failure. Due to these inherent design features, piping failures during seismic events are not likely and do not represent a significant risk to the public.

4.13.2 Wet-Cooled Alternative

The primary difference between a dry- and wet-cooled solar thermal plant is the additional amount of water-treatment chemicals needed to treat the larger volume of water required for a wet-cooled solar thermal plant. In general, the water treatment will require a sodium hydroxide (or similar caustic) for pH neutralization. Sodium hypochlorite is commonly used for cooling tower biological control. It can also be used as a disinfectant or bleaching agent. Sulfuric acid is a strong acid and is commonly used in different concentrations. Sulfuric acid could be needed for pH/alkalinity control of the circulating cooling tower water. In addition, a chemical for corrosion control of condensate piping, an oxygen scavenger, and an anti-scalant will be required. Ultimately, a wet-cooled plant requires more water; therefore, more waste and more chemicals for treatment. In general, the wet-cooled plant will require a treatment system that is 10 times as large as the dry-cooled system.

4.13.3 No Action Alternative

Under the No Action Alternative, the right-of-way would not be granted and the potential impacts from construction and operation of the proposed Project would not occur.

4.13.4 Mitigation

Mitigation measures for the use, storage, and disposal of hazardous materials is provided in Appendix A.

4.14 Unavoidable Adverse Environmental Impacts

Unavoidable adverse impacts are those that would occur after implementation of all committed and recommended mitigation. Unavoidable impacts do not include temporary or permanent impacts which would be mitigated. They also do not include impacts from speculative events such as hazardous waste spills which are not cleaned up promptly in accordance with accepted industry standards or regulatory requirements.

The Applicant has committed to implementing mitigation measures in their Project design to avoid or minimize potential impacts from construction and operation of the Proposed Action. Adverse impacts to resources analyzed were not identified after application of Applicant proposed environmental protection measures, or other mitigation was considered.

Therefore, if all Applicant committed environmental protection measures and additional mitigation measures are implemented, the Proposed Action is anticipated to have no unavoidable adverse impacts on the human and natural environment.

If additional mitigation requirements are identified through the Endangered Species Act Section 7 process, or other permitting processes, the Applicant would develop appropriate measures in consultation with the requesting agency and include these in their Project design. The USFWS may identify additional measures ("terms and conditions") to minimize the incidental take of listed species during the Section 7 consultation process; the Applicant would be required to implement these to be in compliance with the incidental take permit.

4.15 Irreversible and Irretrievable Commitment of Resources

This section describes the irreversible and irretrievable commitments of resources associated with construction and operation of the proposed Project. A commitment of resources is irreversible when primary or secondary impacts limit the future options for a resource. An irretrievable commitment refers to the lost production or use of a resource that would cause the resource to be unavailable for use by future generations. Examples of these types of resources include nonrenewable resources, such as minerals and cultural resources, and renewable resources that would be unavailable for the use of future generations such as loss of production, harvest, or habitat.

Implementation of the proposed Project would result in the consumption of energy as it relates to the fuel needed for construction-related activities. Large amounts of gasoline and diesel petroleum products would be required for Project construction. Additionally, construction would require the manufacture of new materials, some of which would not be recyclable at the end of the lifetime of the proposed Project. The raw materials and energy required for the production of

these materials would also result in an irretrievable commitment of natural resources. Operation of the proposed Project would not cause a substantial increase in the consumption or use of non-renewable resources.

Implementation of the proposed Project would result in the loss of over 4,350 acres of vegetation and habitat. The loss of this habitat would be long-term. Following decommissioning, restoration would be conducted which would involve removal of structures, restoration of topography, and revegetation, all of which would work towards restoration of habitat. However, it is likely that restoration of native vegetation would be slow, and the success uncertain. Therefore, the loss of Desert Tortoise habitat is assumed to be permanent since restoration of vegetation for which they depend for foraging and other factors affecting the quality of the restored habitat are uncertain.

The majority of access required for construction and operation of the proposed Project would utilize existing public rights-of-way and access roads. The proposed Project would require re-routing the existing Amargosa Farm Road, but the re-routed road would re-connect with the existing road to the west of the facility.

Construction and operation of the proposed Project would require the use of a limited amount of hazardous materials such as fuel, lubricants, and cleaning solvents. All hazardous materials would be stored, handled, and used in accordance with BMPs and applicable, federal, state, and local regulations, including a construction-phase SWPPP and an operational phase SWPPP. Assuming appropriate implementation of these plans and practices as are recommended in the conditions of certification, potential degradation of the environment due to accidental spills associated with the proposed Project's use of hazardous materials would not occur.

Visual impacts would be significant and long-term considering the context and intensity of the Project effects in general. Intensity of potential effects involves the unique scenic characteristics of the local landscape as indicated by the rural character of the Project viewshed; concerns expressed by public commenters to date; a degree of uncertainty as to the level of discomfort or disability glare from parabolic mirrors; and concern over cumulative visual effects of renewable projects in the Amargosa Valley as a whole. The loss of visual quality would be long-term, enduring throughout the proposed 30-year lifespan of the facility. After the end of the Project's useful life, it would be decommissioned per BLM requirements; to be described in the Applicant's Decommissioning Plan.

As part of the decommissioning process, the facility would be removed to a depth of approximately 5 feet below grade, original contours restored, and the site revegetated. However, the removal of the existing facility would leave a very prominent visual impact over the entire site due to the strong color contrast created between graded, disturbed soil areas and undisturbed soil areas in the vicinity of the Project site. In addition, revegetation of areas in this desert region are difficult and generally of limited success. Thus, visual recovery from land disturbance of closure and decommissioning would likely occur only over a very long period of time.

4.16 Relationship Between Short-Term Uses and Long-Term Productivity of the Environment

NEPA requires consideration of the relationship between short-term uses and long-term productivity of the environment (40 CFR 1502.16). This section discusses the short-term use of the local environment and the maintenance and enhancement of long-term productivity as a result of construction of and operation of the proposed Project.

For the purposes of this discussion, "short-term" is defined as the period from the onset of construction activities through the initiation of project operation. “Long-term” is defined as the entire operational life of the solar energy plant, which is anticipated to be 30 years or more.

4.16.1 Short-Term Uses

The proposed short-term uses of the natural environment associated with the Proposed Action are the development of about 4,350 acres of land for the footprint of the proposed solar power plant and ancillary facilities; the consumptive use of approximately 600 afy of groundwater over a 39 month construction period; and the direct loss of vegetation and wildlife habitat. Short-term effects on the natural environment would result from land-clearing and construction activities. These would be related primarily to soil disturbance and air quality effects from site clearing and grading, and an increase in noise and traffic in the local area.

Short-term effects on social and economic resources would include an increase in revenue for some local businesses such as construction suppliers, hotels, restaurants, gas stations, and grocery stores.

4.16.2 Long-Term Uses

Approximately 4,350 acres of land would be permanently converted to utility uses, and flora and fauna within the Project footprint would be permanently removed. Longer term effects include the permanent loss of some visual quality from the introduction of the solar plant and ancillary facilities and the consumptive use of approximately 400 afy of groundwater over a 30 year period. Disturbances of previously undisturbed biological habitats could result in long-term reductions in the biological productivity of the area, as biological communities in arid regions tend to recover very slowly from disturbances.

4.17 Cumulative Impacts

4.17.1 Regulations and Guidance

The CEQ (40 CFR 1508.7) defines cumulative impacts as: “...the impact on the environment that results from the incremental impact of the action when added to other past, present, and

reasonably foreseeable future actions regardless of what agency (federal or non-federal) or person undertakes such other actions."

These actions include current and projected area development, management activities, and authorizations on public land, land use trends, and applicable industrial/infrastructure components. Although the individual impacts of each separate project may not be significant, the additive effects of multiple projects could be. These past, present, and reasonably foreseeable future actions are analyzed to the extent that "they are relevant and useful in analyzing whether the reasonably foreseeable effects of the agency proposal for action and its alternatives may have an additive and significant relationship to those effects."

4.17.2 Methodology for Assessing Cumulative Impacts

While there is not a universally accepted framework for cumulative effects analysis, the principles identified by the CEQ - *Considering Cumulative Effects under the National Environmental Policy Act* (CEQ 1997) have gained acceptance. These principles are based on the premise that resources, ecosystems, and the human community each can experience effects. For each of these, there are thresholds, or levels, of stress beyond which their desired conditions degrade.

Each affected resource, ecosystem, or human community must be analyzed in terms of its capacity to accommodate additional effects, based on its own time and space parameters. The most effective cumulative effects analysis focuses on what is needed to ensure long-term productivity or sustainability of the resource.

Information about past, present, and reasonably foreseeable future activities in the cumulative resource ROI were gathered from the BLM, USFWS, Nye County, and other agencies; adopted plans; environmental documents; and personal communications with public agencies and utility companies.

The approach to cumulative impacts of the proposed Project considers "past" projects to be those that have completed construction and are in operation. These projects are included in the environmental baseline, described in the Affected Environment portion of each resource area. Since the impact analysis in each resource area assesses impacts in terms of changes to existing environmental conditions, past projects are not separately addressed in the cumulative analysis. "Present" projects include those that are currently under construction or have been fully permitted such that they are likely to be part of the existing environment when the proposed Project has begun construction.

"Reasonably foreseeable" future projects are those for which a formal application has been filed. The majority of the projects that are specifically considered in the cumulative scenario for the proposed Project are other solar power projects on federal land managed by the BLM; the working definition of "reasonably foreseeable" projects on BLM land is based on whether or not a draft or final Plan of Development (POD) has been filed with the BLM by an applicant.

4.17.3 Geographic Context for Cumulative Analysis

Cumulative impacts occur in a geographic context; but the area over which cumulative effects potentially would be of concern varies for different environmental resource areas. For example, noise and vehicular traffic impacts usually are evaluated in localized terms, impacts on protective services and utilities require evaluation of larger service areas, and the scope of water resources and air quality impacts can involve an entire groundwater basin and/or be affected by topographic features (e.g., mountains). In short, the scope of cumulative impacts evaluations varies spatially, with considerable variability based on the nature of the environmental resource area being considered.

In a broad geographic context, the BLM has received more than 220 applications for utility-scale solar energy projects in California, Nevada, Arizona, New Mexico, Colorado, and Utah. These applications cover more than 2.3 million acres of land. There are also hundreds of applications for utility-scale wind and geothermal energy projects on BLM land in the western United States. Regional cumulative impacts could occur as a result of implementation of the proposed Project in conjunction with these solar, wind, or geothermal energy projects.

There are additional renewable energy projects proposed on private land in Nevada that are solely within the licensing jurisdiction of the Nevada Public Utilities Commission, depending on size. Also, anecdotal discussions with industry professionals suggest that a number of smaller solar photovoltaic (PV) projects are being considered on private land not under the jurisdiction of either the BLM or Nevada Public Utilities Commission.

The West-Wide Energy Corridor Programmatic EIS (PEIS) has delineated energy corridors running through the region, including proposed corridors that parallel US 95 north of the Project area. Electric transmission providers are evaluating various transmission line alternatives in the Amargosa Valley area; however, to date, no formal applications have been filed with either the BLM or the Public Utilities Commission of Nevada.

As part of their long-term planning, Valley Electric Association intends to upgrade its existing transmission lines that are located south of US 95 and west of NV 160 to accommodate future renewable energy development in their service territory. A new 230 kV transmission line adjacent to the proposed Project (along Powerline Road to Anvil Road) would be built. In addition, a new 230 kV transmission line would be built from the VEA substation (at the corner of Powerline Road to Anvil Road) to the existing Valley Switching Substation. The line would then parallel VEA's existing 138 kV transmission line to the proposed Johnny substation. Valley Electric is currently performing system impacts studies to determine other required upgrades to accommodate future load growth.

While the discussions in the various environmental resource areas often consider a broad regional perspective, the specific projects that are the primary focus of the cumulative analyses in this EIS are proposed projects identified between Beatty and Highway 160, basically the Amargosa Valley in Nevada. These proposed projects are shown on Figure 4-10.

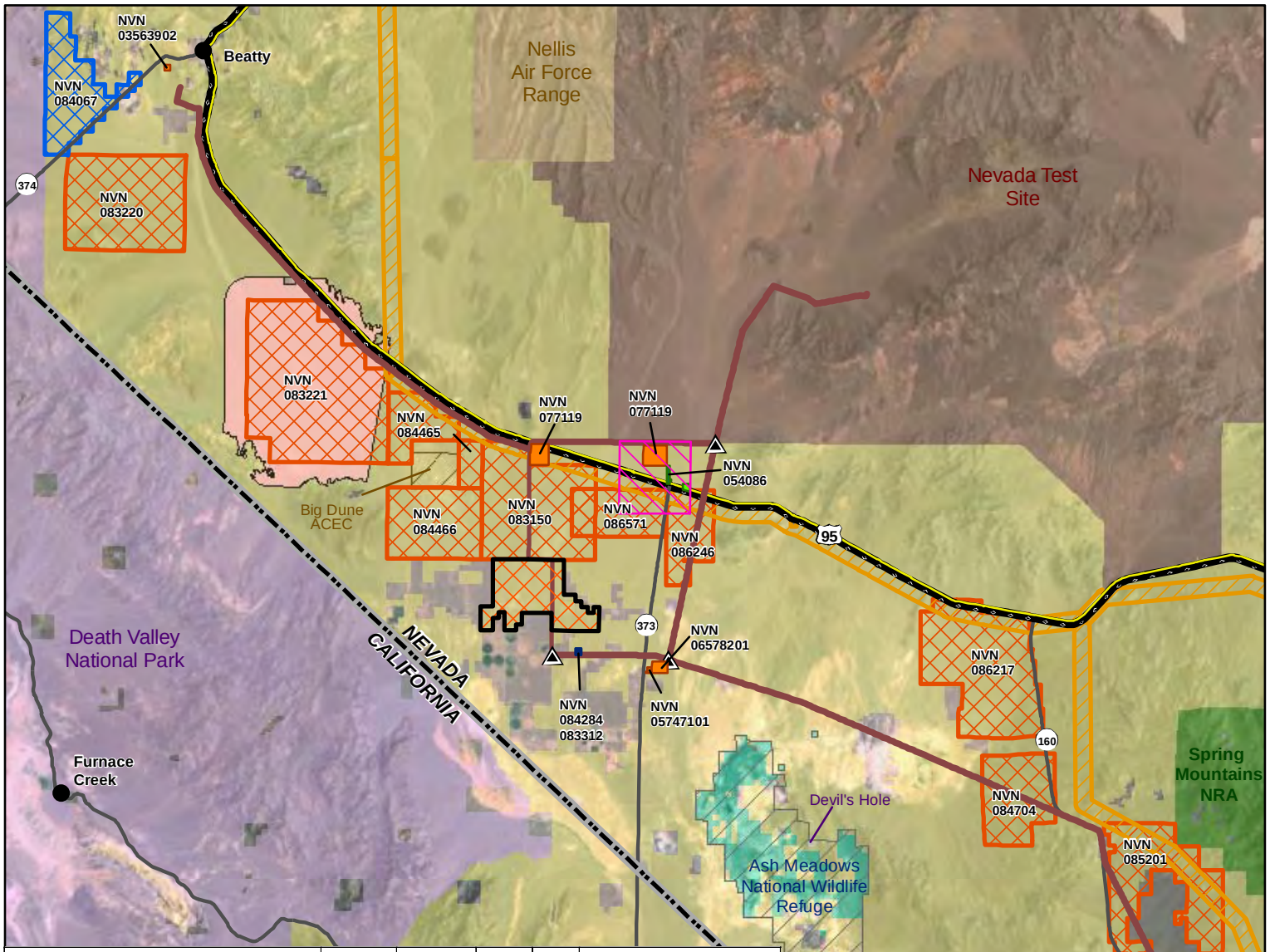

APPLICANT	APPLIC. REC.	SERIAL NO.	ACREAGE	MW	PLANNED TECHNOLOGY
ABENGOA SOLAR INC	12/12/2008	NVN 086571	5,280.00	250.00	PHOTOVOLTAIC
AMARGOSA FLATS ENERGY LLC	3/12/2008	NVN 084704	7,040.00	600.00	COMPACT LINEAR FRESNAL REFLECTOR
AUSRA NV 1 LLC	10/6/2008	NVN 086246	4,480.00	140.00	PARABOLIC TROUGH
COGENTRIX SOLAR SERVICES LLC	2/14/2007	NVN 083150	13,440.00	1,000.00	CSP (SOLAR THERMAL)
COGENTRIX SOLAR SERVICES LLC	3/5/2007	NVN 083220	12,800.00	1,000.00	CSP (SOLAR THERMAL)
COGENTRIX SOLAR SERVICES LLC	3/5/2007	NVN 083221	22,400.00	1,000.00	CSP (SOLAR THERMAL)
EWINDFARM INC	5/14/2008	NVN 085201	11,238.45	500.00	CSP (SOLAR THERMAL)
NYE COUNTY SOLAR I, LLC	9/29/2008	NVN 086217	14,160.00	300.00	PARABOLIC TROUGH
IBERDROLA DBA PACIFIC SOLAR INVESTMENTS INC	12/7/2007	NVN 084465	7,500.00	500.00	PARABOLIC TROUGH
IBERDROLA DBA PACIFIC SOLAR INVESTMENTS INC	12/7/2007	NVN 084466	7,700.00	500.00	PARABOLIC TROUGH
ALTA GAS RENEWABLE ENERGY / RYOLITE WIND ENERGY PARK	8/30/2007	NVN 084067	7,360.00		WIND ENERGY

Amargosa Farm Road Solar Energy Project (NVN-84359)

Cumulative Impacts Figure 4-10

LEGEND

- Project Area
- Science and Technology Park
- Proposed Landfill
- Proposed Nevada Science Museum
- Proposed School
- West-wide Energy Corridor (Sec 386)
- Pending Wind
- BLM Solar Study Area
- Pending Solar
- Conceptual Yucca Mtn Project Gateway Area

Surface Management

- Bureau of Land Management
- Department of Defense
- Department of Energy
- National Park Service
- US Fish and Wildlife Service
- US Forest Service
- Private

General Reference Features

- Existing Transmission Line (<230kV)
- Existing Substation
- State Boundary
- US Highway
- State Highway

Source: Cases, WWEC, Land Ownership - BLM, 2009; Ash Meadows - USFWS, 2005; Imagery - ESRI, 2009; Wells - Nevada State Engineer, 2008; Transmission Lines, Substations - Platts, 2009

February 2010

0 4 8 Miles

In addition, cumulative impacts analysis must consider the variable of time as well as geography. The length of time for cumulative effects analysis varies according to the duration of impacts from the Proposed Action on the particular resource. The timeframe for the cumulative impact analysis begins at the time of Project construction (assume 2010) and extends sufficiently forward in time with consideration of past trends and activities on current and reasonably foreseeable future actions and trends that may affect the sustainability of the resource.

In some resource areas, the overlap in project construction schedules is particularly important because potential impacts that are enhanced by large overlapping construction work forces (e.g., impacts on traffic and socioeconomic conditions and infrastructure) could be considerable. However, these impacts are short-term and temporary because solar project operation-phase work forces are small compared to the construction phase.

There are uncertainties in any large-scale, complex, and costly industrial project as it moves from concept toward realization. However, the level of uncertainties with some of the proposed renewable energy projects in the desert Southwest is unusually great, as discussed in the section below.

4.17.4 Likelihood of Implementation of Cumulative Projects

Cumulative analysis under NEPA requires consideration of the likelihood that the proposed projects actually will occur. To quote the California Energy Staff in the Ivanpah Solar Electric Generation System Preliminary Staff Assessment:

"[While there is]…a very large number of applications to BLM, it is unlikely that all of these projects will be constructed for the following reasons:

- Not all developers will develop the detailed information necessary to meet BLM and Energy Commission standards. Most of the solar projects with pending applications are proposing generation technologies that have not been implemented at large scales. As a result, preparing complete and detailed PODs is difficult, and completing the required NEPA and California Environmental Quality Act (CEQA) documents is especially time-consuming.

- After approval by the appropriate Lead Agency under CEQA [only applies to California projects] and NEPA, (generally the CEC and/or BLM), all permits must be obtained. The large size of these projects may result in permitting challenges related to endangered species mitigation requirements, and other issues.

- Also after project approval, construction financing must be obtained (if it has not been obtained earlier in the process). The availability of financing will be dependent on the status of competing projects, the laws and regulations related to renewable project investment, and the time required for obtaining permits."

Because it is impossible to predict which projects will be developed, all of the identified projects must be considered. However, the fact that many of these projects may not be constructed should be kept in mind for each of the cumulative analyses.

The proposed renewable energy projects in the Amargosa Valley on public or private land must successfully compete for Power Purchase Agreements with utility organizations who are working to meet their State-mandated Renewable Portfolio Standards. In addition, the projects in the Amargosa Valley are competing with many more renewable energy projects proposed throughout the Nevada desert to different BLM field offices (Las Vegas, Pahrump, and Battle Mountain).

4.17.5 Wind and Solar Energy Permitting

The U.S. Department of the Interior and, more specifically, the BLM is seeking opportunities to develop renewable energy resources on federal land. The BLM's policy is to encourage development of renewable energy projects on BLM land consistent with the National Energy Policy of 2001 and the Energy Policy Act of 2005. In furtherance of that goal, the BLM completed a Programmatic EIS assuring a common direction and policy for permitting wind facilities on public land, and is currently preparing a Solar Energy Programmatic EIS (PEIS).

The BLM and the DOE are currently preparing the Solar Energy Development PEIS. The PEIS will evaluate the potential for large-scale solar development on BLM-managed land in California, Arizona, Colorado, New Mexico, Nevada, and Utah. The PEIS will also evaluate the impacts of such development and develop standard mitigation measures for minimizing those impacts.

As described on the Project's website (http://www.solareis.anl.gov/), the BLM is considering whether to establish an agency-wide solar energy development program to supplement or replace existing policy, and to amend land use plans in the six-state study area to adopt the new program. The agency also expects to identify BLM-administered land that may be environmentally suitable for solar energy development and land that would be excluded from such development. The PEIS will consider whether designation of additional electricity transmission corridors on BLM-administered land is necessary to facilitate utility-scale solar energy development. Similarly, through this PEIS the DOE is considering a program of solar energy environmental policies and mitigation strategies as guidance to all DOE-funded solar projects.

The PEIS is not intended to eliminate the need for site-specific environmental review for individual utility-scale solar projects. Site-specific environmental reviews are expected to be tiered to the PEIS and to be simplified and improved by it. For each of 24 (geographic) solar energy study areas in the six states, the BLM intends to complete as much of the site-specific upfront environmental analysis as possible in order to determine whether the areas are appropriate for designation as solar energy zones.

Under the No Action EIS alternative, the DOE and the BLM would continue to evaluate solar energy projects on a case-by-case basis. Under the proposed action, the BLM and DOE will create a reasonably foreseeable development scenario to define the potential for future utility-scale solar energy development activities over a 20-year study period. The release of the Draft Solar Energy Development PEIS was originally scheduled for spring of 2009. However, BLM and DOE decided to postpone completion of the Draft PEIS so that the PEIS could be made consistent with a Department of the Interior policy goal of identification and prioritization of

specific locations best suited for large-scale solar energy production. The BLM has requested public comment on the 24 tracts of BLM-administered land identified for in-depth study for solar development.

As noted on the Project website in January 2010, the draft PEIS release schedule will be determined after the evaluation of comments from the current scoping period concerning the solar energy study areas (ending September 2009). The draft PEIS will not be available for several months after the close of the comment period at the earliest. For these reasons, the PEIS is not available to provide guidance for the preparation of cumulative impacts analyses in this EIS.

4.17.6 Cumulative Projects

As discussed above, the focus of the cumulative analyses in this EIS is to evaluate the potential impacts of the proposed Project combined with impacts of past, present, and reasonably foreseeable projects located within the Amargosa Valley in Nevada. This extent encompasses all relevant projects within the geographic area of responsibility of BLM's Pahrump Field Office. Relevant projects are those that have submitted draft or Final PODs to BLM. There are several solar developers who have submitted applications to the Pahrump BLM that are "second in line," meaning that they proposed development of sites for which applications have already been submitted. Other developers have submitted initial applications, but have not taken the step of submitting a draft or complete POD.

It should be noted that PODs are early project documents, often with quite limited and preliminary information in terms of project characteristics, site environmental conditions, and implementation schedules. As such, the BLM Pahrump Field Office has determined these documents should not be released for public review until a Notice of Intent to begin the NEPA process has been initiated for that project.

As of January 2010, only two other solar projects within the cumulative impact study area are in the public realm. A Notice of Intent to prepare an EIS for the Pacific Solar Investment project was published in the Federal Register on December 14, 2009. Scoping meetings for this Project were held January 19 - 21, 2010. The Notice of Intent for Preparation of an EIS for the Abengoa Solar project, known as the Lathrop Wells Solar Facility, is expected to be published in the Federal Register in March 2010. Although project specific information is not publically available for the other proposed renewable energy projects, basic information such as type of technology to be used, proposed size, and requested acreage are available on BLM's LR-2000 database. This data was used to evaluate the potential cumulative effects when considered with the proposed Project.

It is important to note that each of the cumulative proposed projects will undergo its own review process, and will be required to comply with applicable regulatory requirements and to mitigate impacts that are identified in the review process.

The cumulative projects considered in this EIS are shown on Figure 4-10 and are summarized in Table 4-32. Each of the projects was evaluated to determine if it is sufficiently defined

(reasonably foreseeable) to be: 1) relevant to potential impacts, 2) within the Project area of influence, and 3) of a magnitude that could potentially result in a cumulative impact.

Table 4-32 Summary of Cumulative Impact Projects

Project Name (Schedule)	Right-of-way (acres)	MW	Technology	Workforce	Water Usage
Valley Electric Association transmission line upgrades (2010-1012)	Upgrade existing electrical utility lines	N/A	Upgrade transmission line to 230kV	Unknown	Minimal during construction
Abengoa Solar Inc. Lathrop Wells Solar Facility NVN-086571 2011-2013	BLM Right-of-Way: 5,280 Facility: 4,200	250	Photovoltaic and dry-cooled solar trough (to be constructed in two phases)	Construction Peak – 1,500 Operations – 70 to 80	300- 500 afy
Amargosa Flats Energy NVN-084704 (Unknown) *	BLM Right-of-Way: 7,040 Facility: Unknown	600	Linear Fresnal Reflector	Unknown	Unknown
Ausra Nevada NVN-086246 (Unknown) *	BLM Right-of-Way: 4,480 Facility: Unknown	140	Parabolic Trough	Unknown	Unknown
Cogentrix Solar NVN-083150 (Unknown) *	BLM Right-of-Way: 13,440 Facility: Unknown	1,000	Solar Thermal (troughs)	Unknown	Unknown
Cogentrix Solar NVN-08322 (Unknown) *	BLM Right-of-Way: 12,800 Facility: (Unknown)	1,000	Solar Thermal (troughs)	Unknown	Unknown
Cogentrix Solar NVN-083221 (Unknown) *	BLM Right-of-Way: 22,400 Facility: (Unknown)	1,000	Solar Thermal (troughs)	Unknown	Unknown
EwindFarm, Inc. NVN-085201 (Unknown) *	BLM Right-of-Way: 11,238.45 Facility: (Unknown)	500	Solar Thermal (troughs)	Unknown	Unknown
Nye County Solar One NVN-085217 (Unknown) *	BLM Right-of-Way: 14,160 Facility: (Unknown)	300	Parabolic Trough	Unknown	Unknown
Pacific Solar Investment NVN-084465 (2011-2013)	BLM Right-of-Way: 7,500 Facility: 1,232	150	Photovoltaic (to be constructed in three phases (50 MW each phase)	Construction Peak – 200 Operations – Up to 5 for each phase	5 afy

Table 4-32 Summary of Cumulative Impact Projects					
Project Name (Schedule)	**Right-of-way (acres)**	**MW**	**Technology**	**Workforce**	**Water Usage**
Pacific Solar Investment NVN-084466 (Unknown) *	BLM Right-of-Way: 7,700 Facility: (Unknown)	500	Parabolic Trough	Unknown	Unknown
Altagas Renewable Energy / Ryolite Energy Park (Unknown) *	BLM Right-of-Way: 7,360 Facility: (Unknown)	N/A	Wind Energy	Unknown	Unknown
* Plans of Development not available for public review. Source: BLM and USFS 2009; Pacific Solar Investments 2009; Abengoa 2009					

4.17.7 Evaluation of Potential Cumulative Impacts

The following sections provide an analysis of potential cumulative impacts related to the Proposed Action on each resource when viewed in conjunction with other past, present, and reasonably foreseeable actions in the cumulative impact study area. This analysis considers the anticipated additive effect that the Proposed Action would have to cumulative impacts after BLM-approved mitigation measures are implemented.

Direct impacts from the Proposed Action include surface disturbance from Project construction. The cumulative impact study area for direct impacts includes the Project area within the Amargosa Desert Hydrographic Basin #230. The interrelated projects with potential direct cumulative effects include the construction and operation of Abengoa's and Cogentrix' proposed solar energy projects north of the Project site, and Pacific Solar Investment's proposed solar energy projects near Big Dune.

4.17.7.1 Air Quality

During construction, mitigation measures will be in effect to control and minimize equipment and fugitive dust emissions. Each of the cumulative projects must undergo a separate environmental review process and address its own emissions and impacts. Cumulative impact potential depends on how many of the proposed projects actually are constructed, and whether projects near each other are constructed on overlapping schedules so that peak emissions and impacts coincide. In any case, potential adverse cumulative impacts would occur only during construction of the various projects. Virtually all of the cumulative projects are renewable energy facilities and thus would displace electricity generation that otherwise likely would occur with higher-polluting fossil fuels.

During operation, the proposed Project is predicted to have minor impacts for all criteria pollutants. Due to the large geographic area these projects occupy and the minimal emissions, each of these projects is expected to have minor impacts individually and cumulatively with the proposed Project during operations.

4.17.7.2 Geological & Mineral Resources

Impacts to geological and mineral resources are generally localized and do not result in regionally cumulative impacts. Geological and mineral resources vary according to the geological formations that they occur within. Geological formations may also vary over short distances, effectively limiting the geographic range of the impacts to geological and mineral resources.

The impacts of the Proposed Action to geological hazards and mineral resources will be localized within the Project area. Therefore, the Proposed Action would not affect the immediate vicinity surrounding the Project area. Proper construction methods will reduce the potential for impacts to the Project resulting from geological hazards. Incremental impacts to area geology and mineral resources resulting from the construction, operation, and maintenance of the Proposed Action will not have cumulative impacts.

4.17.7.3 Soil Resources

The potential for cumulative impacts to soil resources as a result of the construction of this Project is considered moderate, based on the location of the proposed Project and the results of the soil resource study that was conducted for the Project. In the context of soil resources, moderate is defined as an impact that may affect the quantity or quality of a regionally significant resource, may affect the long-term productivity of the resource, may involve some irreversible or irretrievable damage to the resource, or creates an impact that can be mitigated on some level. The development of over 106,000 acres of proposed renewable energy projects would cumulatively impact soil resources in Amargosa Valley. The development of these projects would reduce the amount of soils available to plant, animal, and human communities in Amargosa Valley. However, it is anticipated that not all of these projects will be completed. Furthermore, future projects will be required to identify soil resources that would be affected by development, because the region consists mostly of federal land managed by the BLM. Any potential impacts to soil resources that are identified would be addressed.

4.17.7.4 Water Resources

The Fortymile Wash drainage flows through portions of the Project area. Two other solar energy projects are proposed immediately north of the proposed site: Cogentrix Solar Services, LLC (NVN-083150), and Abengoa Solar, Inc. (NVN 086571). Under the Proposed Action, the Proponent intends to protect the property from off-site flows by means of a continuous channel around the northern and western perimeter of the Project site. The channel will be designed to effectively intercept the 100-year storm event off-site runoff and convey the concentrated flow to the southwest corner of the property. The Proponent is coordinating with Nye County to pursue additional storm control alternatives.

An alternative for Regional Flood Control Facilities was presented to BLM and Nye County staff in 2009. The alternative would provide a regional off-site detention basin at the apex of the Fortymile Wash located north of US 95 and would effectively and considerably reduce existing condition peak storm flow downstream of US 95. Reducing off-site peak flows impacting the

site, and other proposed facilities, would allow for reduction in size of perimeter flood control facilities necessary for protection of the Project site. All properties downstream of the detention basin would benefit from this approach.

The interrelated projects and activities with potential effects on groundwater resources include the construction and operation of ten renewable energy projects, and continued groundwater pumping for agricultural, industrial, and domestic use in the Amargosa Valley. Cumulative indirect effects from groundwater pumping in the regional flow system may result in decline in local and regional groundwater levels, including the Ash Meadows area, and flows at downgradient locations.

The annual water requirement for each of the proposed renewable energy projects is unknown, as most developers within the cumulative impact ROI have not filed approved Plan of Developments for BLM review. For any project needing a stable water supply within the area subject to Order 1197, the developer would need to either lease or purchase water currently being pumped under an existing certified water right. Since the water user can only pump up to the authorized duty of the water right, there would be no net increase in groundwater pumping within the basin. However, since most wells in the Amargosa Valley are not metered, it is difficult to quantify the amount of water that may actually be pumped if all interrelated projects were to be approved. An indirect impact of conversion of agricultural water rights to industrial water rights would be a reduction of return flow (recharge) from irrigation.

4.17.7.5 Noise

Cumulative noise impacts from the operation of solar energy facilities are generally localized. The mechanical equipment associated with each of the cumulative projects is unlikely to result in combined noise impacts to a given known sensitive receptor due to the distance between each project. However, due to the increase in traffic volumes along highways and local roads from the construction and operations of multiple solar projects, an increase to the community ambient noise levels may occur.

Due to the remoteness of the general area and the size of the individual projects, instances where there would be cumulative noise impacts occurring at any given sensitive receptor location during construction activities would be infrequent and would only occur if multiple projects are constructed at the same time or when the construction activities occur along the adjacent project boundaries where known sensitive receptors are located.

4.17.7.6 Vegetation

Over time, natural and diverse plant communities of Mojave desert scrub are eliminated as native plant species are either destroyed or degraded as a result of increased energy development. Cumulative impacts to native species result when non-native invasive species are allowed to spread or be introduced in an area, eventually replacing naturally occurring communities. Native plants generally have a slow recovery rate, and generally cannot recover from severe disturbance. There are permanent impacts to vegetation when there is no evidence to indicate that pre-disturbance levels of biomass, cover, density, soils, and plant community structure could

be achieved within 5 years. Loss of native vegetation would affect habitat structure and ecological function of riparian communities. On a regional scale, the natural hydrological and ecological function of washes would be permanently altered as a result of cumulative use of the watershed.

The interrelated projects and activities with potential effects on groundwater resources include the construction and operation of ten renewable energy projects, and continued groundwater pumping for agricultural, industrial, and domestic use in the Amargosa Valley. Cumulative indirect effects from groundwater pumping in the regional flow system may result in decline in local and regional groundwater levels, including the Ash Meadows area, and the special status plant species which occur there, and flows at downgradient locations

Based on the location of the proposed Project and the results of the biological resource study that was conducted for the Project, the potential for cumulative impacts to vegetation as a result of the construction of this Project is moderate. In the context of biological resources, moderate is defined as an impact that may affect the quantity or quality of a regionally significant resource, may affect the long-term productivity of the environment, may involve some irreversible or irretrievable damage to the environment, or creates an impact that can be mitigated on some level. Creosote bush, the dominant species growing on the Project, grows abundantly in Mojave desert scrub; however, its importance is evident by its potential to support a large number of wildlife species, including the federally listed Desert Tortoise, its importance to local and regional biological processes and functions, and the uniqueness and age of creosote bush itself. Because the region consists mostly of federal land managed by the BLM, future projects will be required to identify vegetation and plant communities that would be affected, and any potential adverse effects to vegetation that are identified will be addressed.

4.17.7.7 Wildlife

The development of over 106,000 acres of proposed renewable energy projects would cumulatively impact wildlife and wildlife habitat occupying Mojave desert scrub. As discussed in section 4.17.4, it is anticipated that all of these projects will not be completed. The development of these projects would reduce the available habitat for wildlife (diverse group of reptiles, mammals, and birds), federally listed species (e.g., Mojave Desert Tortoise), and other special status species (e.g., Le Conte’s Thrasher, Burrowing Owl). Cumulative impacts would contribute to the loss, fragmentation, and degradation of Mojave desert scrub, which would result in impacts to habitat connectivity, genetic integrity of wildlife populations, wildlife movement corridors, fragmentation of species populations, significant alteration of natural riparian habitat and function, and loss of occupied habitat for a variety of animals. Cumulative impacts would also encourage non-native invasive species, thereby eliminating or degrading natural plant communities upon which wildlife depend.

The Desert Tortoise inhabits the area in extremely low densities. The 2009 surveys detected four old burrows and no additional signs of recent inhabitation by tortoises. The quality of the habitat in the Amargosa Valley has been found to be of low quality due to lack of annuals and other suitable forage for Desert Tortoises. According to Nevada Natural Heritage Program data (2009), there are 10 known locations of Desert Tortoises found within the areas of the proposed projects.

The majority of the Desert Tortoise locations in the vicinity are to the north of Hwy 95 or south and east of Ash Meadows NWR.

The interrelated projects and activities with potential effects on groundwater resources include the construction and operation of ten renewable energy projects, and continued groundwater pumping for agricultural, industrial, and domestic use in the Amargosa Valley. Cumulative indirect effects from groundwater pumping in the regional flow system may result in decline in local and regional groundwater levels, including the Ash Meadows area, and the special status wildlife species which occur there, and flows at downgradient location

Based on the location of the proposed Project and the results of the biological resources study that was conducted, the potential for cumulative impacts to wildlife as a result of the construction of this Project is moderate. The elimination of vegetation (described above) or habitat directly affects local wildlife ecology and would contribute to changing trends in wildlife populations, movement and breeding of wildlife, and alter the interrelationships with other species occupying different ecosystems. Wildlife species occupying small, isolated patches of habitat are more susceptible to disturbance than species that are more widely distributed over the landscape. Because the region consists mostly of federal land managed by the BLM, future projects will be required to identify wildlife, including federally protected species and other sensitive species that would be affected by those projects. Any potential adverse effects to wildlife or wildlife habitat that are identified will be addressed.

4.17.7.8 Cultural Resources

Over time, cultural resources are subject to slow degradation as cultures change, and archaeological and historical sites weather and erode. Prior development of various types of projects has degraded and destroyed cultural resources as well. Indirect impacts on cultural resources can result from degrading the setting of a historic property and incidental damage to cultural sites as a result of increased public access to previously inaccessible areas.

Based on the location of the proposed Project and the results of the cultural resource study that was conducted, the potential for cumulative impacts to archaeological and historic sites as a result of the construction of this Project is considered low. The Project is located in an area with low site density which is currently accessible by the public and only one prehistoric site has been deemed significant. A potential increase in personnel living in the Amargosa Valley, from the proposed Project may have an effect on currently undiscovered historic properties in nearby areas during recreational pursuits. Because the region consists mostly of federal land managed by the BLM, any future projects will be required to identify any historic properties that would be affected, and any adverse effects to cultural resources identified would be mitigated.

4.17.7.9 Paleontological Resources

Impacts to paleontological resources are generally localized and do not result in regionally cumulative impacts. Paleontological resources vary according to the geological formations that contain them. Geological formations may also vary over short distances, effectively limiting the geographic range of impacts to paleontological resources.

The impacts of the Proposed Action to paleontological resources will be localized within the Project area. The suggested mitigation measures will ensure that the potential for adverse impacts to paleontological resources are minor. There is, however, the potential for future projects in the vicinity to disturb areas that may contain known or unknown paleontological resources. Future projects with potentially significant impacts to paleontological resources would be required to comply with federal and state regulations and ordinances protecting paleontological resources through implementation of similar mitigation measures as proposed here. Therefore, the potential construction impacts of the Proposed Action in combination with other projects in the area would not contribute to a cumulatively significant impact to paleontological resources.

4.17.7.10 Socioeconomic Resources

There is the potential for substantial renewable energy development not only in the Amargosa Valley, but throughout the desert Southwest. Cumulative impacts can occur if implementation of the proposed Project is considered with other local or regional projects. Cumulative impacts could occur as a result of regional development of the many proposed renewable energy development projects that have been or are expected to be under consideration by the BLM in the near future.

For this analysis, the geographic extent of cumulative impacts related to socioeconomics includes the Amargosa Valley, and larger cities within 2 hours of the Project area, including the Town of Pahrump, and Las Vegas and surrounding communities. This geographic extent is appropriate because local jurisdictions or districts provide socioeconomic factors, such as public services, and the labor force and housing market potentially impacted is expected to come primarily from within these areas.

Despite the potential for construction schedule overlaps with projects within the cumulative impact ROI, no adverse cumulative socioeconomic effects are anticipated from either the construction or operation of the proposed Project. As discussed in Chapter 4.9 – Socioeconomic Resources, an assumed maximum peak labor force of 1,300 workers during construction, and 180 full-time, permanent employees during operations, represents a small portion of the available regional labor force.

Implementation of the proposed renewable projects would create job stimulus within the local area that could increase population in the Amargosa Valley and other Nye County communities, including Beatty and Pahrump. However, since the proposed Project would not result in any project specific adverse socioeconomic impacts, it would not contribute to any potential local cumulative adverse socioeconomic impacts.

In addition, the long-term payment of taxes and fees and distribution of payroll dollars is expected to have a significant cumulative benefit to both Nye and Clark County by increasing the amount of public funds available to the counties for community projects. The cumulative benefits would be increased when combined with the revenues accrued as a result of current and future reasonably foreseeable projects.

4.17.7.11 Environmental Justice

Potential cumulative impacts associated with the Proposed Action would not have a disproportionate effect on low-income or minority populations. There are no special issues, such as housing, transportation, access, or resource use in the Project area that would affect the EJ population disproportionately.

4.17.7.12 Land Use, Recreation, Transportation, and Access

Over time, land use, transportation, access and recreation resources are impacted as land changes ownership, plans and facilities are developed, and demands for infrastructure increase or decrease. Prior activities including agriculture and mining in the Amargosa Valley have decreased available land, while simultaneously increasing access and transportation. Pending leases and rights-of-way on BLM land continuously impact land use in the area.

The potential for cumulative land use, recreation, and transportation impacts exists where there are multiple projects proposed in an area that could impact similar resources. Projects with large land use conversions similar to the proposed would collectively result in an adverse impact to the Valley's land use, recreation, and transportation resources by nature of the acreage they occupy and the increase in employee traffic.

Overall, some short-term and long-term, adverse and non-adverse cumulative impacts to transportation and recreation could occur in Amargosa Valley as a result of constructing numerous energy projects. Into the operation phase of the projects, the increased development impacts would decrease as improvements to infrastructure increase to meet the need. Impacts to land use, access and recreation therefore would be considered largely indirect and low.

Based on the available data on pending renewable energy applications with the BLM, approximately 106,000 acres of primarily federal land use would be converted to industrial use. The most important adverse impact related to this development would be the loss of access to land due to BLM disposal. By leasing/selling to developers, the loss of available lands for other uses (i.e., water and mineral resource development) would result.

Additive impacts on land use would also result from numerous existing and proposed industrial developments within the Amargosa Valley area, including agriculture, mining, solar power plants, and transmission lines. Increased energy development would drive the demand for the use of new and existing right-of-way corridors for transmission lines, pipelines, distribution lines, and roads to support the construction of these planned facilities.

The cumulative influx in laborers could create a moderate cumulative impact to the transportation network (US 95 and other local roads) in the area as they develop to meet the demands of increased development. Due to many construction workers opting to commute long distances to their work sites, temporary adverse impacts would result from the construction of multiple, large projects in the area.

This influx of workers would mean an increase in economic activity from workers spending in local businesses, and the projects themselves for construction materials and supplies, etc. The

increase in commercial activity to meet the demand of a new commuter population would potentially have indirect positive (economic) and adverse (increased traffic) impacts to the Project area.

An increase in various energy developments would potentially modify the character of the Amargosa Valley area. As development occurs, the very rural environment would become increasingly industrial. Large industrial developments that require many employees would spur other commercial and residential growth within the region, resulting in increased need for improved transportation corridors and other infrastructure.

Although no direct impacts would occur in the SMAs in the area, if populations increase as a result of industrial development, the use of designated and dispersed recreation areas within the Amargosa Valley area could also increase. Facilities would be stressed by the increased use, but could simultaneously benefit from the increased fee revenue. The quality of the recreational setting could be reduced due to the cumulative increase in development (through loss of wilderness aesthetic, etc. [see Visual impacts]).

Dispersed recreational opportunities on the formerly public land being disposed by the BLM for private land uses would be restricted.

4.17.7.13 Visual Resources

The development of over 106,000 acres of proposed solar project projects would result in increased visual cumulative impacts to the viewsheds from public roadways, recreation areas, and residential areas. Viewsheds of the Project vicinity are extensive given the topography of the Amargosa Valley, lack of vegetative screening, and dispersed nature of sensitive viewers.

Potential cumulative visual impacts would result from the construction, operation, and maintenance of the proposed Project in the context of current and proposed projects within the Amargosa Valley. The majority of proposed projects are solar and would have similar visual effects when compared to the proposed Project. Current and future projects would incrementally modify the setting in a similar manner, as compared to the proposed Project, which would result in an industrial landscape character. This change in landscape character in conjunction with potential viewer impacts would result in adverse cumulative impacts.

The proposed Project, along with the past, present, and reasonably foreseeable projects, could substantially alter the visual character of the areas within the Project vicinity. Many of the proposed projects would have the potential to create new visual impacts within the viewsheds that could be affected by the proposed Project from public roadways, recreation areas, and residential areas. The BLM will prepare a simulation, from KOP 2 – Lathrup Wells Rest Area (Figure 4-6 A,B), that illustrates visual cumulative impacts for inclusion in the FEIS.

When considered with the existing visual setting and future developments potentially modifying the visual character of the Amargosa Valley, the proposed Project would not significantly alter existing scenic quality or viewsheds associated with public roadways, recreation areas, and

residential areas and would not substantially add cumulative effects because the valley as whole would be modified by similar solar projects.

4.17.7.14 Hazardous Materials, Hazardous and Solid Waste

Facility design and hazardous materials handling programs developed and implemented for the Project would reduce the Project's potential impacts to the environment. The other identified cumulative projects would be required to comply independently with hazardous materials regulations, depending on their specific circumstances (e.g., nature and quantities of hazardous materials stored and used). Many of the cumulative projects (including the proposed Project), are separated by miles from any of the other projects so there is minimal risk of an accident at one project affecting another project. Solar projects also use less hazardous materials than do fossil fuel-fired power plants. In short, Project construction and operation activities would not cause or contribute substantially to significant cumulative impacts with respect to hazardous materials handling from either a local or regional perspective.

This page intentionally left blank.