BLM

SCOPING SUMMARY REPORT

SEARCHLIGHT WIND ENERGY PROJECT ENVIRONMENTAL IMPACT STATEMENT

(NVN-084626 Searchlight Wind Energy Project and NVN-085777 Western Area Power Administration Substation)

Prepared for:
U.S. Department of Interior
Bureau of Land Management
Las Vegas Field Office
Las Vegas, Nevada

Prepared by:
URS Corporation

April 2009

TABLE OF CONTENTS

1.0 INTRODUCTION 1-1
- 1.1 OVERVIEW 1-1
- 1.2 BACKGROUND 1-1
- 1.3 PROJECT LOCATION 1-2
- 1.4 PROJECT UPDATES 1-2

2.0 SCOPING PROCESS 2-1
- 2.1 OBJECTIVES 2-1
- 2.2 DESCRIPTION OF THE SCOPING PROCESS 2-1
  - 2.2.1 Announcements 2-1
  - 2.2.2 Public Scoping Meetings 2-3
  - 2.2.3 Project Website 2-3

3.0 SUMMARY OF SCOPING COMMENTS 3-1
- 3.1 INTRODUCTION 3-1
- 3.2 COMMENT ORGANIZATION 3-1
- 3.3 SIGNIFICANT ISSUES AND ANTICIPATED ANALYSIS 3-2
- 3.4 SUMMARY OF PUBLIC COMMENTS 3-3
- 3.5 ISSUES IDENTIFIED DURING SCOPING 3-5
  - 3.5.1 Actions and Alternatives 3-5
  - 3.5.2 Environmental Impacts 3-7
- 3.6 BLM COMMENTS 3-10
- 3.7 WESTERN COMMENTS 3-11
- 3.8 ISSUES OUTSIDE THE SCOPE OF THE EIS 3-11

4.0 SUMMARY OF FUTURE STEPS IN THE EIS PROCESS 4-1
- 4.1 IDENTIFICATION OF ISSUES 4-1
- 4.2 DATA INFORMATION AND COLLECTION 4-1
- 4.3 IDENTIFYING ALTERNATIVES, ASSESSING IMPACTS, AND PLANNING MITIGATION 4-2
- 4.4 DRAFT EIS AND PUBLIC REVIEW 4-3
- 4.5 PREPARE FINAL EIS AND ISSUE RECORD OF DECISION 4-3
- 4.6 AGENCY AUTHORITIES AND DECISIONS TO BE MADE 4-3

LIST OF TABLES

Table 2-1 Display Advertisement Summary – January 2009 2-2
Table 2-2 Public Scoping Meeting Attendance 2-3
Table 3-1 Comment Summary 3-4
Table 4-1 Potential Agency Decisions and Actions 4-4

LIST OF FIGURES AND MAPS

Map 1-1 Site Layout Map (as presented during scoping) 1-3
Figure 4-1 Planning Process Flow Chart 4-1

LIST OF APPENDICES

A Announcements
Notice of Intent
Newsletter
Display Advertisement
Press Release (outlets and copy)

B Public Scoping Meeting Materials
Boards
Presentation
Sign-In Sheet
Comment Form

LIST OF ACRONYMS

BLM	Bureau of Land Management
CFR	Code of Federal Regulations
EIS	environmental impact statement
EPA	U.S. Environmental Protection Agency
FAA	Federal Aviation Administration
GIS	geographic information system
kV	kilovolt
MW	megawatt
NEPA	National Environmental Policy Act of 1969
NOI	Notice of Intent
O&M	operations and maintenance
ROW	right-of-way
Western	Western Area Power Administration

1.0 INTRODUCTION

1.1 OVERVIEW

The U.S. Department of the Interior, Bureau of Land Management (BLM), Las Vegas Field Office is preparing an environmental impact statement (EIS) to identify the potential effects of the construction, operation, and maintenance of the proposed Searchlight Wind Energy Project. The 370-megawatt[1] (MW) wind power generating facility and ancillary facilities would be located in an area near Searchlight, Nevada. The EIS is being prepared in compliance with the National Environmental Policy Act of 1969 (NEPA) (42 U.S.C. 4321), as amended, and the Council on Environmental Quality regulations (Title 40 Code of Federal Regulations [CFR] parts 1500-1508). As part of the EIS process, BLM will solicit and consider the views of interested parties.

This report summarizes the scoping process and comments received on the proposed project. Scoping is the first step and an integral part of the EIS process. It is "an early and open process for determining the issues to be addressed and for identifying the significant issues related to a proposed action" (40 CFR Part 1501.7). During scoping, BLM actively seeks to engage potentially affected or interested federal, state, and local agencies; American Indian tribes; and the public. Scoping for this EIS commenced on December 16, 2008, with the publication of a Notice of Intent (NOI) in the *Federal Register* (Appendix A), and concluded on February 17, 2009.

1.2 BACKGROUND

Searchlight Wind LLC (Searchlight Wind), a wholly owned subsidiary of Duke Energy, proposes to construct a 370-MW wind energy facility near Searchlight, Nevada, on public land administered by the BLM Las Vegas Field Office.

The purpose of the proposed project is to create an economically viable source of clean renewable electricity. The proposed project is responsive to federal and state renewable energy policies. Because wind is a local resource, the proposed project would contribute to domestic energy security while reducing greenhouse gases created by generating energy through the use of fossil fuels.

The primary components, as presented at the public scoping meetings of the proposed facility, are as follows:

- Up to 161 wind turbines, including concrete foundations, tubular steel towers, nacelles, and blades;
- Access roads;
- Electrical collection system (wind turbines to Searchlight Wind Substation);
- Communication lines;

[1] Note: When the NOI was published in December 2008, Searchlight Wind proposed a 359 MW wind generating facility. In January 2009, the proposed project was revised to generate 370 MW.

- Up to 161 pad-mount transformers, one located at the base of each wind turbine;
- Two electrical substations (one would be owned and operated by Western Area Power Administration [Western], one would be owned and operated by Searchlight Wind);
- Electrical transmission line (running between Western Substation and Searchlight Wind Substation);
- Operations and maintenance (O&M) building;
- Electrical interconnection (would be owned and operated by Western);
- Two lay down areas (one temporary, one permanent); and
- Up to five permanent meteorological masts.

1.3 PROJECT LOCATION

Searchlight Wind has submitted a right-of-way (ROW) application for 24,383 acres near Searchlight, Nevada, approximately 55 miles south of Las Vegas, Nevada, and 39 miles north of Laughlin, Nevada (Map 1-1). Proposed construction activities will encompass approximately 600 acres of disturbance, which includes approximately 120 acres of permanent disturbance and approximately 480 acres of temporary disturbance for construction activities. The total area estimated to be used by the project (all facilities and temporary disturbance) is approximately 2.1 percent of the total ROW. The permanent footprint of the wind energy facility will constitute 0.5 percent of the ROW.

1.4 PROJECT UPDATES

The initial Plan of Development for the proposed project was submitted in January 2008. Since then, formal and informal comments, along with engineering constraints, have resulted in the following changes to the proposed project design:

- All turbines would be located on the east side of the town of Searchlight to avoid surrounding the community.
- No turbines would be located on private property.
- All turbines would be moved back from the Searchlight airport to comply with Federal Aviation Administration (FAA) setback requirements for small airports.
- The total number of turbines proposed has been reduced from 161 (as presented in the scoping process) to 140.
- Roads and transmission lines have been adjusted for the revised design.
- Meteorological Tower Number 4 has been moved from west of the project area to southeast of the project area.
- Additional design details are provided concerning typical foundations, road design, construction methods and the potential for an on-site cement batch plan.

Map 1-1 Site Layout Map (as presented during scoping)

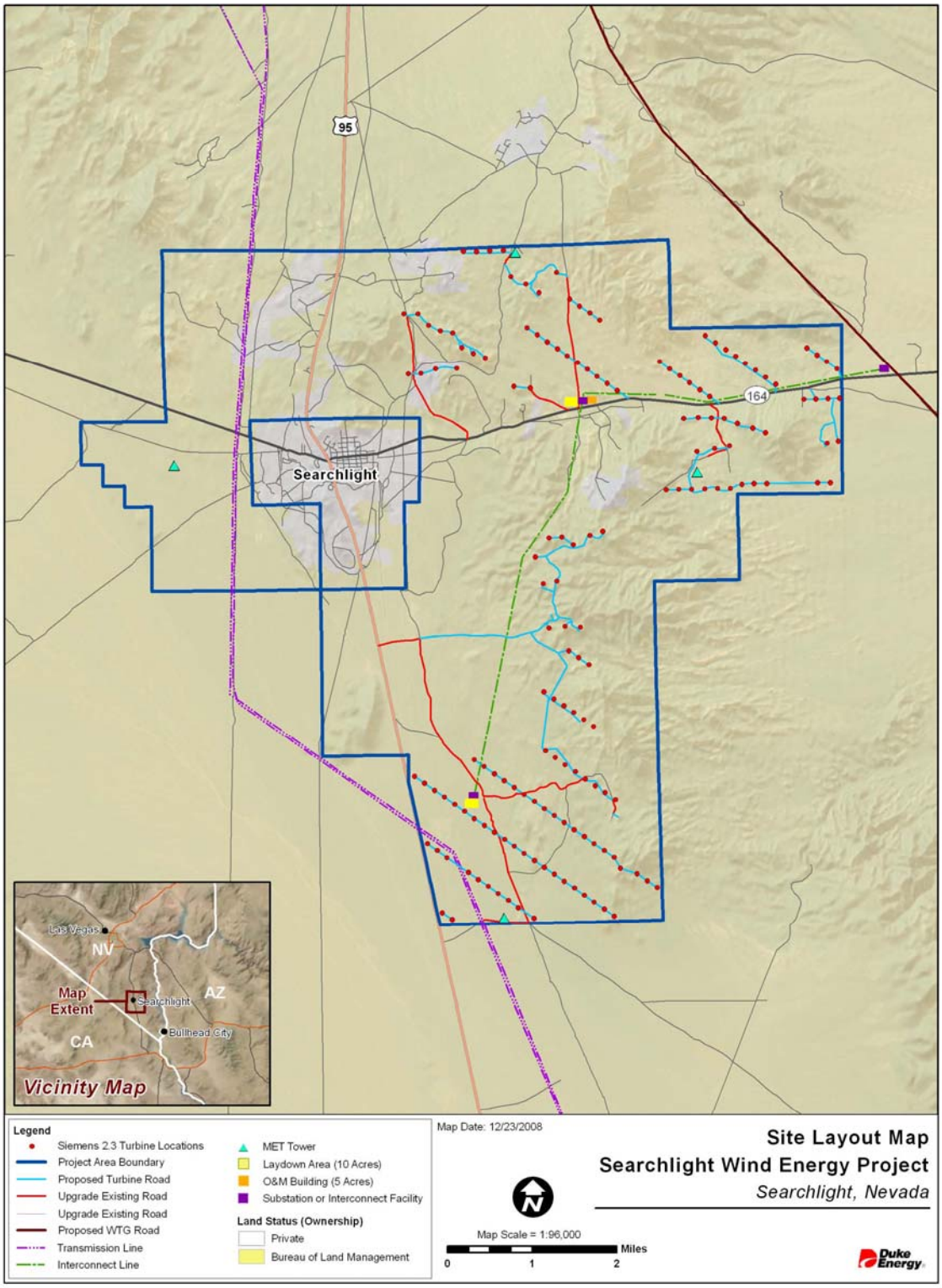

2.0 SCOPING PROCESS

This section provides a summary of the objectives of scoping and a description of the scoping process and agency coordination for the Searchlight Wind Energy Project.

2.1 OBJECTIVES

The objectives of the scoping process include the following:

- Invite affected federal, state, and local agencies; affected Native American tribes; and the public to:
  - Establish a process to integrate and expedite environmental reviews
  - Establish the planning and decision-making schedule
- Determine the scope of the project, including the range of actions, alternatives, and impacts to be considered in an EIS;
- Identify:
  - Issues that have been covered by prior environmental review that can be eliminated from detailed study
  - Any environmental assessments and other EISs being prepared, or that are planned for preparation, that are related to but are not part of the scope of the EIS under consideration
  - Other environmental review and consultation requirements (i.e., Endangered Species Act, Historic Preservation Act) so required analyses and studies can be prepared and integrated with the EIS

2.2 DESCRIPTION OF THE SCOPING PROCESS

The following section describes methods used to involve the public, notify them of scoping meetings, and facilitate exchange of current project information throughout the planning process.

2.2.1 Announcements

2.2.1.1 Notice of Intent

The public was notified of the project and upcoming scoping meetings through the NOI published in the *Federal Register* (http://edocket.access.gpo.gov/2008/E8-29686.htm) on December 16, 2008 (Appendix A). The NOI announced the intent to prepare an EIS and indicated that scoping meetings would be held in Boulder City, Laughlin, and Searchlight, Nevada. The NOI also stated that the specific dates, locations, and times of the scoping meetings would be announced through mail distribution on the BLM website (http://www.blm.gov/nv/st/en/fo/lvfo/blm_programs/energy.html) and in the local media. In addition, the NOI provided project information including a description of proposed facilities, the

project location, information on how to submit comments and why they are important, and BLM contact information.

2.2.1.2 Newsletters

The public and many agencies were notified of the scoping period and comment opportunities through a newsletter (Appendix A) distributed to approximately 814 people on January 16, 2009. The initial mailing list was provided by the BLM Las Vegas Field Office and included addresses of current local elected or municipal officials, federal and state agencies, potentially interested Native American tribes, and other interested parties. All post office box holders in zip codes 89046 (Searchlight, Nevada) and 89039 (Cal-Nev-Ari, Nevada) were sent a copy of the newsletter. The newsletter provided information for submitting comments via mail, fax, and e-mail, and included the direct contact information for the BLM Project Manager, Mark Chandler. The mailing list will be supplemented throughout the project to include those who provide scoping comments, attend meetings, or express to the BLM their interest in the project through the project website or direct request.

2.2.1.3 Media Contacts

The public was also notified of the scoping meetings through advertisements published in local newspapers, as listed in Table 2-1 (refer to Appendix A for a copy of the display advertisement). The table provides information on the publication, area of coverage, and print dates for the advertisements.

Initial public notice of the scoping meeting dates, times and locations were published, 15 days in advance of the first meeting, in a display advertisement in the Las Vegas Review Journal on January 12, 2008. This advertisement ran again on January 18, 2008.

Advertisements were also placed in the Boulder City News (January 15, 2008) and the Laughlin Times (January 14, 2008). Approximately 50 flyers announcing the meetings were posted in local gathering places in Searchlight and the surrounding communities. This service was provided by the Desert Flyer, a newsletter local to the Searchlight area.

Table 2-1 Display Advertisement Summary – January 2009

Publication	Area of Coverage	Print Date
Las Vegas Review Journal	Las Vegas metropolitan area, southern Nevada	January 12, 18
Boulder City News	Boulder City, Nevada	January 15
Laughlin Times	Laughlin, Nevada	January 14
Desert Flyer (posted flyers)	Laughlin to Nelson, Nevada	January 12

News releases were distributed to newspapers, radio, and television stations and to community newsletters on January 22, 2009, to assist with public notification. A copy of the news release and the media outlets to which it was distributed are included in Appendix A.

2.2.2 Public Scoping Meetings

Three public scoping meetings were held for the proposed project. At each scoping meeting, representatives from URS Corporation (the environmental consultant assisting the BLM with the EIS), the BLM, and Searchlight Wind provided a presentation on the NEPA process, the proposed project and associated facilities, and how to provide scoping comments. Display boards were provided showing information on the project purpose and need, project description, planning process, purpose of the scoping process, and public comment opportunities. Before and after the presentation, an open house atmosphere was maintained during which attendees could review the display boards and speak informally to project team members.

Meeting attendees were encouraged to ask questions and provide comments both during and after the presentation, or one-on-one during the open house portion of the public scoping meetings. Comment forms were available at each meeting for attendees to provide written comments at the time of the meeting or to return by mail. Locations, dates, and attendance of each public meeting are provided in Table 2-2. Copies of scoping meeting materials including the presentation, display boards, and the comment form are provided in Appendix B.

Table 2-2 Public Scoping Meeting Attendance

Location	Date	Attendance
Searchlight, Nevada – Searchlight Community Center	January 27, 2009	73
Laughlin, Nevada – William G. Bennett Elementary School	January 28, 2009	4
Boulder City, Nevada – Boulder City Library	January 29, 2009	36
Total Attendance at Scoping Meetings		**113**

2.2.3 Project Website

To ensure the ease of public access, the project newsletter and the draft project Plan of Development were both posted on a BLM Web page at http://www.blm.gov/nv/st/en/fo/lvfo/blm_programs/energy.html. A copy of this scoping report will be posted to the project website in April 2009.

3.0 SUMMARY OF SCOPING COMMENTS

3.1 INTRODUCTION

This section provides: (1) summaries of the method used to organize and analyze comments; (2) the number of comments received; (3) the number of issues identified within those comments; (4) summaries of issues identified during scoping; (5) BLM management concerns that were identified independent of public or agency scoping comments; and (6) a list of issues that will not be identified in the EIS with justification as to why they will not be addressed. All the scoping comments documented in this report were received or postmarked by the close of the comment period on February 17, 2009.

Comments regarding the proposed project and alternatives to the proposed project will be considered by the BLM in refining the project description and alternatives that will serve as the basis for assessing impacts. The Council on Environmental Quality regulations implementing NEPA requires an analysis of available alternative actions prior to selecting the preferred alternative action. Input on alternatives will be considered in the analysis and text of the EIS. Chapter 2 of the EIS will describe which alternatives were considered but were not carried forward for detailed analysis in the EIS.

The Council on Environmental Quality regulations require an analysis of the impacts of a project on the "human environment." These impacts include effects on natural, human, and cultural resources. Discussions with affected public or agencies, such as those that have occurred through this scoping effort, help to define and evaluate effects of the different alternatives on the human environment. Comments relating to environmental impacts will be considered by BLM in developing the scope of EIS technical studies. Chapters 3 (Affected Environment) and 4 (Environmental Consequences) of the EIS will address the issues incorporated into the study. Concerns about the EIS studies and decision-making processes will be considered in refining and modifying the EIS process throughout the remainder of the EIS preparation.

Some comments may be considered outside the scope of this EIS if: (1) the issue relates to facilities not included in this project; (2) the issue is not within the jurisdiction of BLM to resolve; or (3) the issue cannot be reasonably addressed within the scope of this process or is being addressed through a separate NEPA process. In addition, personal opinions of individuals or special interest groups about the proposed project, wind power, the BLM, and other topics are also considered outside the scope of the EIS and will not be addressed. Issues that will not be addressed are identified by issue or resource in Section 3.8.

3.2 COMMENT ORGANIZATION

The comment forms, e-mails, and mailed and faxed letters received through February 17, 2009, were reviewed, documented, and entered into a database to facilitate organization, sorting, analytical review, and to manage comments. The database was structured to organize comments into separate issue categories and identify the type of comment (e.g., letter, e-mail, fax, postcard, or telephone record). Using the experience and professional judgment of the study team, the comments were organized according to 14 major issue categories as they relate to the EIS. The issue categories are as follows and described in detail in Section 3.5.

Actions and Alternatives: This category includes comments about various aspects and components of the proposed project. Comments also indicate suggestions for and concerns about alternative facilities that should be considered in the EIS. Comments also identified topics relative to the planning and EIS preparation process, including public review opportunities. Identified issue categories are:

- Process (including EIS preparation and studies)
- Project Alternatives
- Project Description
- Project Need

Environmental Impacts: This category includes comments about the proposed project's potential impacts on natural resources, human resources, and cultural resources as well as comments about social and economic concerns. Topic categories include the following:

- Air Quality
- Cultural/Archaeology
- Hazardous Materials/Safety
- Land Use/Transportation
- Noise/Vibration
- Socioeconomics
- Vegetation/Wildlife
- Visual Resources
- Water Resources
- Cumulative Effects

3.3 SIGNIFICANT ISSUES AND ANTICIPATED ANALYSIS

NEPA requires federal agencies to focus their analysis and documentation on the significant issues related to a proposed action. Significant issues serve as the basis for developing and comparing alternatives. The BLM has identified significant issues associated with the proposed project; these are presented in Sections 3.5, 3.6, and 3.7. Issues include those raised externally during the public scoping process and those developed internally by the BLM. The significant issues are stated in the form of a question by resource category. These issues are analyzed in the EIS. Issues identified during scoping but not considered significant are addressed in Section 3.8 and are not carried forward in the EIS.

3.4 SUMMARY OF PUBLIC COMMENTS

Quantifying comments and issues is helpful in summarizing comments for public review and helping to guide future EIS studies. This process requires the coder to interpret comments in order to glean and categorize any substantive issues. While definitive parameters are established around each category, it must be noted that categorizing comments is a subjective process.

The level of importance of comments to BLM or to the decision-making process is not influenced by the frequency of a specific issue. The BLM takes all substantive issues into consideration regardless of the number of comments in which they occur. For instance, numerous copies of the same form letter may be submitted by unique individuals, or a person may have attended several scoping meetings or mentioned the same issue several times in their letter. In these cases, issues would be recorded several times. However, if a substantive comment appears only once, it will have the same level of importance as those mentioned more frequently.

A total of 66 comment submissions were received and entered into the project database. The individual issues within each comment were classified into the 14 main categories of issues (discussed in Section 3.2 above), and 58 categories of sub-issues. For example, if a comment stated a concern about use of land for recreation (i.e., hiking or hunting), the comment was listed under the main issue of land use, sub-issue of recreation. Similarly, if a comment questioned noise from construction equipment, noise/vibration was identified as the main issue, with construction noise as the sub-issue. This organization allowed the project team to identify, quantify, and analyze public concern during preparation of this scoping report and the EIS. It also allowed team members to identify issues at a very detailed level while maintaining the context of each comment. If a comment mentioned multiple issues, it was categorized as belonging to each of those issues. These comments and issues are summarized in Section 3.4 along with a sample of representative quotations.

Within the 66 comment submissions received, 384 issues were identified and categorized into the 14 main issue categories. In some instances, a single letter may mention the same issue multiple times through various statements. Each statement was entered into the project database and categorized as to issue and sub-issue. Table 3-1 summarizes the volume of comments received on each of the 14 main issue categories.

Table 3-1 Comment Summary

Main Issue	Total Comments	Percent Based on Total Comments Identified*
Air Quality	19	5
Cultural/Archaeology	16	4
Cumulative Effects	8	2
Hazardous Materials/Safety	31	8
Land Use/Transportation	32	8
Noise/Vibration	16	4
Process	12	3
Project Alternatives	41	11
Project Description	33	9
Project Need	2	0.5
Socioeconomics	45	12
Vegetation/Wildlife	82	21
Visual Resources	40	10
Water	7	2
Total Unique Comments	**384**	**99.5**

NOTE: *Due to rounding and comment submissions not relevant to comment categories (i.e., mailing list submissions), the total does not equal 100 percent.

As noted in the table above, concerns about vegetation/wildlife were most frequently mentioned, appearing in 21 percent of total comments received. In this category, concerns about impacts on special status species/habitat were most prevalent, appearing in 32 percent of comments within vegetation/wildlife. Section 3.5.2.8 contains representative questions illustrating these concerns.

Socioeconomic issues were present in 12 percent of total comments received. Specifically, property values and quality of life were the highest areas of concern in the socioeconomic category, occurring respectively in 33 percent and 18 percent of comments in this category. Section 3.5.2.7 contains representative questions illustrating these concerns.

Project alternative suggestions (11 percent of total comments) were also relatively high. Sixty-six percent of comments in this category included suggestions on alternative locations, while 29 percent of comments included questions about other forms of renewable energy. Section 3.5.1.2 (project alternatives) contains representative questions illustrating these concerns.

Concerns about impacts on visual resources occurred in 10 percent of total comments received. Main issues occurring within the visual resources category were direct facility impacts and impacts on the scenic quality of the project area, occurring respectively in 58 percent and 28 percent of the comments in this category. Section 3.5.2.9 (visual resources) contains representative questions illustrating these concerns.

Questions regarding plans for the proposed project made up the project description category and were expressed in 9 percent of all comments. The majority of these comments were related to land disturbance (21 percent of total comments in this category), land restoration (15 percent of total comments in this

category), and transmission/substation (15 percent of total comments in this category) concerns. Section 3.5.1.3 (project description) contains representative questions illustrating these concerns.

Hazardous materials/safety issues occurred in 8 percent of all comments; the majority of which (68 percent) concerned air safety resulting from facility height, lights, or communication/signal interference. Section 3.5.2.4 (hazardous materials/safety) contains representative questions illustrating these concerns.

Comments concerning land use/transportation, specifically, recreation concerns (34 percent of total comments in this category) and adjacent land use concerns (31 percent of total comments in this category), were also noted in 8 percent of total comments received. Section 3.5.2.5 (land use/ transportation) contains representative questions illustrating these concerns.

3.5 ISSUES IDENTIFIED DURING SCOPING

The following section provides a summary of unique comment issues identified during scoping, including a sample of representative questions. Some statements serve to summarize dozens of comments, while others summarize one comment. The method used to identify and categorize issues is discussed in Sections 3.2 and 3.3.

3.5.1 Actions and Alternatives

3.5.1.1 Process

Comments in this category primarily questioned the scoping and public involvement processes. Some questions were received on studies being done for the project or additional studies that should be completed for the EIS.

- If studies were being done, why was it nearly a year before local residents learned of the project?
- Why is the Plan of Development incomplete?
- At the scoping meeting, what was the reason the boundaries on the maps did not match?
- Why were residents of Grandpa's Road and Cottonwood Cove not contacted about this project?
- With other renewable generation projects proposed in Nevada and California, is there a study on shared access and transmission for these projects?
- Some studies appear incomplete. Will more engineering and meteorological studies be prepared before BLM makes a decision on project viability and location?

3.5.1.2 Project Alternatives

Comments in this category suggested alternative locations and actions for the project.

- Why has Searchlight Wind proposed a wind facility and not a solar generation plant?
- Wouldn't small-scale rooftop wind or solar generators be a better option?
- Why put the wind towers in plain view of the town when there is so much uninhabited land available?
- Why is the Searchlight area the chosen location for the project when other areas have much better rated wind generating capacity?
- Why not consider areas to the north of Searchlight, beyond the ridges, or along the highway?
- Why not put the turbines in an already industrial or developed area?
- Is it possible for power lines to be buried?

3.5.1.3 Project Description

Comments in this category are related to specifications of the proposed project.

- How much energy will be lost during transmission?
- Can power lines be run underground?
- After the estimated 20-year life of the project, why isn't replacement of components and facilities addressed as an option?
- What is the restoration plan for the 600 acres of land that will be disturbed?
- Why is such a large area (24,000 acres) being requested in the right-of-way application? Can a smaller area be authorized (only the area required for the project)?
- What are the permanent effects of land disturbance on the area?
- How will turbine height be adjusted to meet local regulations?
- How many miles of roads will be bulldozed and dynamited in? Where will any gravel, fill, or other materials used come from?

3.5.1.4 Project Need

Two comments were received questioning the need for the project.

- What data are being used to determine consumer need for this project?
- How could conservation efforts minimize the need for this and other new energy projects?

3.5.2 Environmental Impacts

3.5.2.1 Air Quality

- How will ambient air quality be studied? What monitoring activities will be implemented to assure compliance with state and federal air quality regulations?
- How will dust from construction and operations activities be controlled? What regulations will guide dust control measures?
- What measures will be taken to mitigate emissions from construction and maintenance vehicles?
- Is there a smoke management plan that will help reduce health impacts from burned vegetation?
- What types of permits are needed to assure local, state, and federal regulatory compliance regarding air quality standards?
- How will the project and facilities be affected by climate change?
- What will be the greenhouse gas emissions produced by project construction and operation?

3.5.2.2 Cultural/Archaeology

- How will archaeologically sensitive areas such as those present in the lower Colorado River region be affected by the project?
- How will the study address archaeologically sensitive areas that will be destroyed?
- What considerations are being made regarding the historical significance of Searchlight?
- How will Native American communities be affected by the project?
- What efforts will be made to involve Native American officials in the study?
- How will Spirit Mountain, a place of significance to Native Americans, be affected?
- Will special considerations be made for areas with petroglyphs?

3.5.2.3 Cumulative Effects

- There are numerous energy projects proposed in the area. How will these be evaluated for past, present, and future cumulative impacts?
- If this project is approved, is a precedent being set making it easier for other projects to be established using BLM land?
- With numerous alternative energy proposals being considered on BLM land in southern Nevada, what is the management document guiding BLM land use decisions for alternative energy projects?

3.5.2.4 Hazardous Materials/Safety

- Will the turbines leak oil or other fluids? What plans are in place to mitigate this?
- Will the turbines or generators catch fire due to malfunction or lightning strike?
- Will drinking water be contaminated due to project activity?
- Can debris be flung from the turbines onto nearby roads and threaten driver safety?
- How will the project affect the navigational equipment used at the airport?
- Is there an awareness that the Flight for Life helicopter may not be able to land or fly safely?
- Will the lights on the turbines be a safety hazard for flight operation by affecting or disorienting flight crews?
- Will reflective paint be placed on the blades so pilots are aware of the full structure height (not just the height of the main tower)?
- If the Searchlight airport is not available to be used as a feeder airport for Las Vegas in times of overcrowding, could this cause a safety issue from overcrowding and burdening of the FAA system?

3.5.2.5 Land Use/Transportation

- How will the project plan support or conflict with the land use plans of other governing bodies?
- Will the public be able to access any of the 25,000 acres currently under study for this project?
- How will hunting in the project area be affected? Will access to hunting areas be restricted?
- Will noise created by the turbines effect recreation areas?
- Could this project and the associated structures conflict with development of air travel facilities, including the future potential expansion of Searchlight Airport or the development of private airparks?
- Will this project jeopardize or limit the trail system that has been in the planning stages for four years?
- What effects will users of all-terrain vehicles experience?
- Since Cottonwood Cove Road will be used as a main access road, what measures will be taken to ensure it can withstand the increase in construction traffic?
- Will Cottonwood Cove Road remain open at all times for emergencies?

3.5.2.6 Noise/Vibration

- How will eight months of construction noise affect Searchlight?
- What impact will construction noise have on animals in the region?

- Will the turbines make noise? How will it affect the quality of life for Searchlight residents?
- What research is available on the effects noise has on communities with wind generation facilities?
- How will the effects of noise on the surrounding areas be studied?
- Will the turbines cause vibration?

3.5.2.7 Socioeconomics

- How will construction and operation of the wind facilities affect tourism?
- How will quality of life for Searchlight residents change as the wind facility changes the area?
- Will property values of the area be affected by the project? What effects have other wind communities experienced?
- How will Searchlight residents benefit from this project?
- Searchlight has one ambulance. Will the addition of construction crews to the area overtax available medical services?
- Will local jobs be lost due to impacts on tourism?
- Will construction and maintenance workers be hired locally?
- How will this project affect future economic growth for Searchlight?

3.5.2.8 Vegetation/Wildlife

- How will the desert tortoise be affected by construction and maintenance of the project?
- Will common black hawks and bald eagles from nearby populations be affected?
- What efforts will be made to minimize impacts on habitats of special status species of plants and animals?
- How will Joshua trees be affected by the project?
- What is the weed management plan?
- How will noise from the turbines affect animal populations?
- Will birds and bats be injured or killed? What efforts will be taken to minimize this?
- How will impacts on Gila monsters and bighorn sheep be studied?
- If herbicides will be used to remove or control vegetation, how will the area be affected?
- How will bird migration be affected?

3.5.2.9 Visual Resources

- Will the placement of wind turbines affect views of scenic areas such as Lake Mohave and the surrounding mountains?
- How will the placement of wind turbines affect views of scenic areas surrounding Lake Mead National Recreation Area?
- How will impacts to the scenic quality of the area be studied?
- What effect will turbine lighting have on air safety?
- Will flashing lights from the wind mill blades from the sun's reflection be a dangerous distraction for drivers?
- How will tourism be impacted by changes to the visual environment?
- Will the new facility give Searchlight an industrial look?
- What steps will be taken to minimize visual impacts on the area?

3.5.2.10 Water

- How will water be used during construction?
- How much water will be used?
- What regulations will ensure that any water used for the project is used wisely and for the public good?
- Will overall water quality be affected by the project and project activities?
- What regulations will ensure that all efforts are made to prevent water quality from being affected?

3.6 BLM COMMENTS

As required by BLM guidance (Handbook H-1790-1), an internal review was implemented to establish whether any areas of concern, which did not appear in public comments, existed. Such concerns were identified based on cooperation or pending cooperation with the following agencies: Nevada Department of Wildlife, Nevada Division of Environmental Protection, National Park Service, Clark County, and the United States Department of Defense. The following are questions representative of these concerns.

- Will any Waters of the United States be impacted by the project? Will a Section 401 or 404 permit be required?
- What potential conflicts with mineral issues and existing mining claims, plans, or notices exist?

3.7 WESTERN COMMENTS

Searchlight Wind has submitted an application to Western to interconnect 300 MW of the proposed wind energy generation site with Western's existing Davis-Mead 230-kilovolt (kV) Transmission Line, near its crossing of State Route 164 seven miles east of Searchlight, Nevada. Western proposes to construct a new 230-kV substation to accommodate the interconnection and provide transmission service up to 300 MW to Searchlight Wind Energy LLC based on the application. If the wind energy generation site is built out to more than 300 MW, Western would address the need for an additional transmission capacity in a separate and subsequent process.

Western is addressing the Searchlight Wind application under its Large Generator Interconnection Procedures included with its Open Access Transmission Service Tariff (http://www.wapa.gov/transmission/oatt.htm). The procedures include conducting transmission system studies to ensure that the transmission system can accommodate the proposed wind generating facility. At this time, all the transmission system studies have not been completed. Details, requirements, and environmental impacts for other system improvements are unknown at this time, since they would be dictated by the on-going transmission system studies. These studies may identify additional upgrades needed to accommodate the proposed interconnection, including modifications at existing Western substations that could include installing new control buildings, new circuit breakers and controls; adding new electrical equipment, which would include installing new concrete foundations for electrical equipment and buildings, substation bus work, cable trenches, buried cable grounding grid, and new surface grounding material; and/or replacing existing equipment and/or conductors with new equipment and/or conductors to accommodate the proposed interconnection.

If any needed transmission system modifications are identified after the completion of the EIS, Western would address the environmental impacts of these modifications in accordance with regulatory requirements.

3.8 ISSUES OUTSIDE THE SCOPE OF THE EIS

Some comments were received regarding the project proponent, Searchlight Wind. These comments in some instances requested a detailed analysis of the company and investors. It was requested that the EIS disclose who the investors are, if the company is foreign-owned, and what actions (if any) state-elected officials have taken to promote this or other renewable projects on BLM land. An EIS is intended to evaluate potential environmental impacts. It is beyond the scope of this effort to evaluate the corporate structure or financial resources of Searchlight Wind; therefore, these comments will not be addressed in the EIS.

Additional questions were received regarding the types of permits that would be required and comments were received indicating that the facility should be required to obtain appropriate permits (i.e., air or water use permits) prior to construction. Permits required by other federal, state, or local agencies are outside the jurisdiction of the BLM and subject to separate processes. While the necessary permits and authorities are disclosed in this document (see Section 4.6), the preparation and public availability of those permit applications will occur independent of the preparation of this EIS. Nevertheless, it is important to note that all federal, state or local permits pertaining to the proposed actions of the applicant are required to be in place prior to the issuance of the Notice to Proceed.

4.0 SUMMARY OF FUTURE STEPS IN THE EIS PROCESS

The process for the EIS requires a team of interdisciplinary resource specialists to complete each step. An important part of the BLM planning process is engaging the public and relevant agencies from the earliest stages of and throughout the planning process to address issues, comments, and concerns. The steps of the planning process and agency authority and decisions to be made are described below. Figure 4-1 provides a summary of the EIS process and schedule.

Figure 4-1 Planning Process Flow Chart

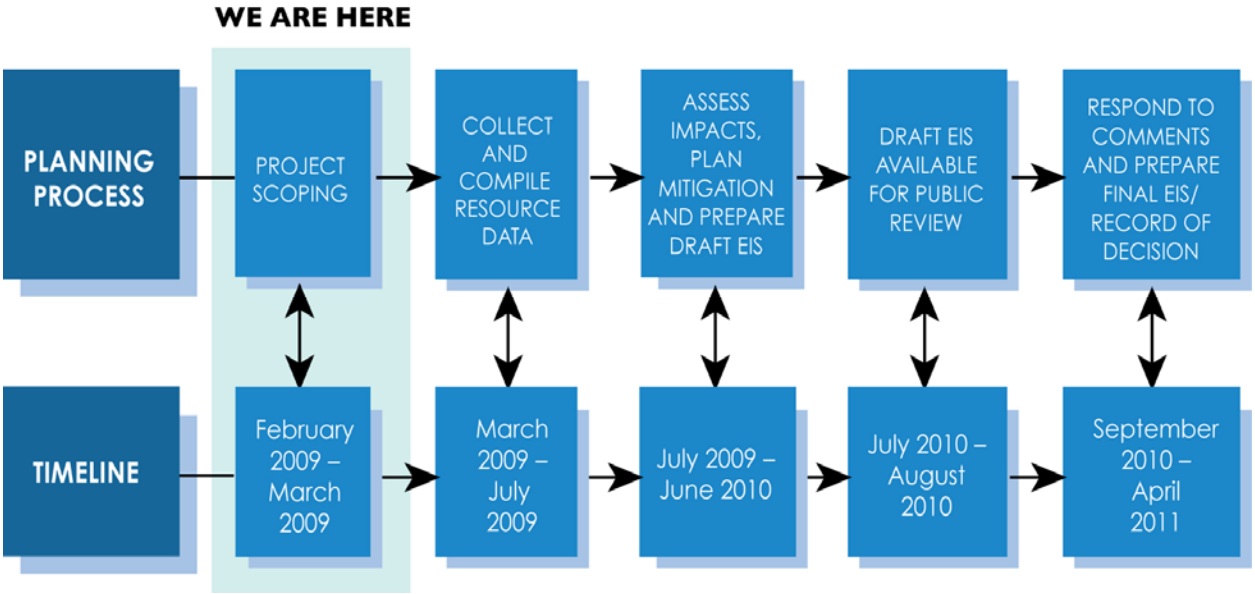

4.1 IDENTIFICATION OF ISSUES

Issues associated with the proposed project were identified through the scoping period, which initiated the planning process. The scoping process and the issues identified through the scoping process are documented in this scoping report, which is also available on the project website (http://www.blm.gov/nv/st/en/fo/lvfo/blm_programs/energy.html) and from the BLM Las Vegas Field Office.

4.2 DATA INFORMATION AND COLLECTION

Much of the necessary resource data and information will be compiled and used from existing data on file at BLM Las Vegas Field Office, BLM Nevada State Office, or through other local agencies and academic institutions. Additional data and information will be obtained from current studies being conducted by BLM and other sources to update and/or supplement BLM's data.

Data could be obtained from published and unpublished reports, maps, and digital information for use in a geographic information system (GIS). Generally, the resources and resource uses to be addressed include the following:

- Land Use
- Recreation and Access
- Special Management Areas (including Areas of Critical Environmental Concern, Special Recreation Management Areas, and Wilderness Study Areas)
- Groundwater and Surface-Water Resources
- Climate and Air Quality
- Biological Resources (including vegetation, wildlife, special status species, wild horses and burros, noxious weeds and invasive species)
- Geology, Soils, and Minerals
- Noise
- Archaeological Resources, Historic Properties, and Paleontological Resources
- Visual Resources
- Social and Economic Conditions
- Environmental Justice
- Public Health and Safety, Hazardous Materials and Waste

During the data collection and information collection step of the EIS process, BLM will initiate specific coordination with agencies, including the U.S. Fish and Wildlife Service for Section 7 consultation, the Nevada State Historic Preservation Office for Section 106 consultation, and the U.S. Army Corps of Engineers for Section 404 consultation, to ensure these procedures are completed in conjunction with the EIS process. In addition, a summary of all tribal coordination and consultation will be included in Chapter 5, Consultation and Coordination, of the Draft EIS.

4.3 IDENTIFYING ALTERNATIVES, ASSESSING IMPACTS, AND PLANNING MITIGATION

Based on collected data, including public comments, a description of proposed actions and alternatives (including no action) will be developed. Only alternatives that meet a standard of technical and economic feasibility will be considered in detail. Proposed alternative actions will be responsive to issues identified through the scoping process, fulfill the purpose and need (as described in the EIS), be consistent with agency planning documents, and address key social and environmental concerns. Impacts that could result from implementing the proposed action and alternatives will be analyzed and measures to mitigate those impacts will be identified where appropriate.

4.4 DRAFT EIS AND PUBLIC REVIEW

A summary of the scoping process, data collection efforts, and the findings of the impact assessment and mitigation planning will be documented in a Draft EIS. The Draft EIS is expected to be available for public review by mid-2010. To initiate the public comment period, the BLM will file the Draft EIS with the U.S. Environmental Protection Agency (EPA). Upon receipt of the document, the EPA will publish a filing notice in the *Federal Register*. The date the EPA notice appears in the *Federal Register* is the date that the public review period begins. The BLM will then inform the public that the Draft EIS is available for public comment by publishing a Notice of Availability in the *Federal Register* and advertising in local media. Public comments will be accepted for a period of either 45 or 60 days. During this time, meetings will be held to receive comments on the adequacy of the Draft EIS.

4.5 PREPARE FINAL EIS AND ISSUE RECORD OF DECISION

BLM will review and prepare responses to comments received on the Draft EIS. The EIS may or may not be modified based on public comments; however, all substantive comments and responses will be incorporated into the Final EIS.

The Final EIS also will be made available for the public to review for a period of 30 days, estimated for the fall of 2010. The availability of the Final EIS will be announced in the *Federal Register* and advertised in local media. Following the 30-day period, BLM will address any protests and/or issues in a Record of Decision, currently expected in early 2011.

In response to its need for agency action, Western will adopt the EIS and use it to support a decision on whether or not to grant the interconnection for the proposed wind generating facility. Western's decision will be addressed in a separate Record of Decision, currently expected in early 2011.

4.6 AGENCY AUTHORITIES AND DECISIONS TO BE MADE

Prior to and during the scoping process, BLM anticipated the discretionary government actions that would need to be addressed in the EIS, and decisions related to those actions. Table 4-1 represents a preliminary list of likely decisions and actions required for each component of the proposed project.

Table 4-1 Potential Agency Decisions and Actions

Agency	Permit/Approval Required
FEDERAL	
Bureau of Land Management	NEPA Implementation; Issuance of Right-of-way Grant
Department of Defense, Department of Homeland Security	Consultation Regarding Military Radar
Western Area Power Administration, an Agency of the U.S. Department of Energy	NEPA Implementation; Acquisition of Right-of-way Grant for Electrical Interconnection Facility/Substation; Decision whether or not to grant interconnection
Federal Aviation Administration	Aviation Hazard Clearance; Approval of Lighting Plan
U.S. Army Corps of Engineers	Clean Water Act, Section 404, Nationwide Permit 12
U.S. Fish and Wildlife Service	Endangered Species Act, Section 7, Consultation and Biological Opinion
STATE	
Nevada Department of Wildlife	Project Review Including Wildlife and Habitat Consultation
State Historic Preservation Office	Section 106, Consultation under National and State Historic Preservation Acts
Nevada Public Utility Commission	Utility Environmental Protection Act Compliance
Nevada Department of Transportation	State and County Right-of-way Encroachment Permits; Oversize/Overweight Permits
Nevada Division of Environmental Protection	402 National Pollutant Discharge Elimination System General Stormwater Permit for Construction Activities and 401 Water Quality Certification. O&M SWPPP and SPCCP
Nevada Division of Water Resources	Well Permit
Nevada State Fire Marshall	Hazardous Materials Storage Permit; Nevada Combined Agency Permit; Tier II Compliance
LOCAL	
Clark County Comprehensive Planning	Special use permit; Waiver of Development Standards; Building Permit
Clark County Regional Flood Control District	Federal Emergency Management Agency Map Review and Clark County Regional Flood Control District Plan Compliance
Clark County Health District Air Pollution Control Division	Dust Control Permit; Grading Permit
Clark County Health District	Septic System Permit
Clark County Fire Department	Blasting Permits (if necessary)

Notes: NEPA = National Environmental Policy Act; O&M = operations and maintenance; SPCCP = spill prevention control and countermeasures plan; SWPPP = stormwater pollution prevention plan

APPENDIX A

ANNOUCEMENTS

Notice of Intent
Newsletter
Display Advertisement
Press Release

(1) advise other Federal and State agencies and the public of our intention to conduct detailed planning on this refuge, and (2) obtain suggestions and information on the scope of topics to consider in the environmental document and during development of the CCP.

Background

The CCP Process

The National Wildlife Refuge System Improvement Act of 1997 (Improvement Act) (16 U.S.C. 668dd–668ee), which amended the National Wildlife Refuge System Administration Act of 1966, requires us to develop a CCP for each national wildlife refuge. The purpose for developing a CCP is to provide refuge managers with a 15-year plan for achieving refuge purposes and contributing toward the mission of the National Wildlife Refuge System (NWRS), consistent with sound principles of fish and wildlife management, conservation, legal mandates, and our policies. In addition to outlining broad management direction on conserving wildlife and their habitats, CCPs identify wildlife-dependent recreational opportunities available to the public, including opportunities for hunting, fishing, wildlife observation and photography, and environmental education and interpretation. We will review and update the CCP at least every 15 years in accordance with the Improvement Act and NEPA.

We establish each unit of the NWRS for specific purposes. We use these purposes as the basis to develop and prioritize management goals and objectives for the refuge within the NWRS mission, and to determine how the public can use the refuge. The planning process is a way for us and the public to evaluate management goals and objectives for the best possible conservation approach to this important wildlife habitat, while providing for wildlife-dependent recreation opportunities that are compatible with the refuge's establishing purposes and the mission of the NWRS. Our CCP process provides opportunities for Tribal, State, and local governments; agencies; organizations; and the public to participate. At this time, we encourage the public to provide input in the form of issues, concerns, ideas, and suggestions for the future management of John Hay NWR.

We will conduct the environmental review of this environmental assessment in accordance with the requirements of NEPA, as amended (42 U.S.C. 4321 *et seq.*); NEPA regulations (40 CFR parts 1500–1508); other appropriate Federal laws and regulations; and our policies and procedures for compliance with those laws and regulations.

John Hay National Wildlife Refuge

John Hay NWR was the former summer estate of historic figure John Hay. It was donated to the Service in 1972 by Alice Hay to be used as a migratory bird and wildlife reservation. Currently, the refuge consists of approximately 80 acres on the shores of Lake Sunapee in Newbury, New Hampshire, and consists of upland northern forests, and undeveloped shoreline. These areas serve the habitat needs of waterfowl, wading birds, and raptors.

Scoping: Preliminary Issues, Concerns, and Opportunities

We have identified preliminary issues, concerns, and opportunities that we may address in the CCP. We have briefly summarized these issues below. During public scoping, we may identify additional issues.

Public use throughout the refuge will be reevaluated in relation to wildlife-dependent recreation and other mission compatible uses. These include an ADA-compliant interpretive nature trail, overlooks, and a trailhead at the Fells parking area. We will also explore different visitor use options for the refuge.

Access to the refuge from the adjacent Fells property needs to be coordinated in terms of the use of their parking area or the creation of a second parking area, and the establishment of a trailhead or other interpretive information on their property.

We need to address how the Service can create a more visible presence at the refuge and the adjacent Fells property. Potential avenues are through signs, kiosks, and seasonal staff.

Public Meetings

We will involve the public through open houses, informational and technical meetings, and written comments. We will release mailings, news releases, and announcements to provide information about opportunities for public involvement in the planning process. You can obtain the schedule from the planning team leader or project leader (see **ADDRESSES**). You may also submit comments anytime during the planning process by mail, electronic mail, or fax (see **ADDRESSES**). There will be additional opportunities to provide public input once we have prepared a draft CCP.

We anticipate that public meetings will be held in Newbury, New Hampshire. For specific information including dates, times, and locations, contact the project leader (see **ADDRESSES**) or visit our Web site at *http://www.fws.gov/northeast/johnhay.*

Public Availability of Comments

Our practice is to make comments, including names, home addresses, home phone numbers, and electronic mail addresses of respondents available for public review. Individual respondents may request that we withhold their names and/or home addresses, etc., but if you wish us to consider withholding this information, you must state this prominently at the beginning of your comments. In addition, you must present a rationale for withholding this information. This rationale must demonstrate that disclosure would constitute a clearly unwarranted invasion of privacy. Unsupported assertions will not meet this burden. In the absence of exceptional, documentable circumstances, this information will be released. We will always make submissions from organizations or businesses, and from individuals identifying themselves as representatives of or officials of organizations or businesses, available for public inspection in their entirety.

Dated: October 1, 2008.

Wendi Weber,

Acting Regional Director, Northeast Region, U.S. Fish and Wildlife Service, Hadley, Massachusetts.

[FR Doc. E8–28914 Filed 12–15–08; 8:45 am]

BILLING CODE 4310–55–P

DEPARTMENT OF THE INTERIOR

Bureau of Land Management

[LLNV050000–L51010000.ER0000.F8740000; NVN–084626; 09–08807; TAS: 14X5017]

Proposed Wind Energy Project, Searchlight, NV

AGENCY: Bureau of Land Management, Interior.

ACTION: Notice of intent to prepare an environmental impact statement (EIS).

SUMMARY: In compliance with the National Environmental Policy Act (NEPA) of 1969, 42 U.S.C. 4321 *et seq.*, the Bureau of Land Management (BLM), Las Vegas Field Office will prepare an EIS for a wind energy project located on public lands in Clark County, Nevada.

DATES: This notice initiates the public scoping process. Comments on issues may be submitted in writing until February 17, 2009. Any scoping meetings will be announced 15 days in advance through local news media and

the BLM Web site at: *http://www.nv.blm.gov/vegas/default.html.*

ADDRESSES: Submit comments related to the project by any of the following methods:

- *E-mail: mchandle@nv.blm.gov*
- *Fax:* (702) 515–5064 (attention Mark Chandler)
- *Mail:* BLM Las Vegas Field Office, 4701 North Torrey Pines Drive, Las Vegas, NV 89130–2301

Documents pertinent to this project may be examined at the Las Vegas Field Office. Additional opportunities for public participation will be provided on publication of the draft EIS.

FOR FURTHER INFORMATION CONTACT: For further information and/or to have your name added to the mailing list, call Mark Chandler, (702) 515–5064; or e-mail *mchandle@nv.blm.gov.*

SUPPLEMENTARY INFORMATION: Searchlight Wind Energy, LLC, has submitted an application for the construction, operation, maintenence, and termination of a wind energy generation site. The proposed project would consist of 156 wind turbine generators and related rights-of-way appurtenances, including a substation administered by the Western Area Power Administration east of Searchlight, Nevada. The proposed wind energy project would produce approximately 359 megawatts of electricity. The proposed project site will be located on approximately 24,383 acres of public lands surrounding the town of Searchlight, Nevada.

Issues that are anticipated to be addressed in this EIS include visual impacts, avian impacts, socioeconomic impacts, electrical transmission capacity, and cumulative impacts.

Before including your address, phone number, e-mail address, or other personal identifying information in your comment, you should be aware that your entire comment—including your personal identifying information—may be made publicly available at any time. While you can ask us in your comment to withhold your personal identifying information from public review, we cannot guarantee that we will be able to do so.

Federal, State, and local agencies, as well as individuals or organizations that may be interested in or affected by the BLM's decision on this project are invited to participate in the scoping process and, if eligible, may request or be requested by the BLM to participate as a cooperating agency.

Authority: 43 CFR 2800.

Dated: December 4, 2008.

Kimber Liebhauser,

Assistant Field Manager, Lands Division, Las Vegas Field Office.

[FR Doc. E8–29686 Filed 12–15–08; 8:45 am]

BILLING CODE 4310–HC–P

DEPARTMENT OF THE INTERIOR

Bureau of Land Management

[LLID100000–L10200000–PH0000]

Notice of Public Meeting, Idaho Falls District Resource Advisory Council Meeting

AGENCY: Bureau of Land Management, Interior.

ACTION: Notice of public meetings.

SUMMARY: In accordance with the Federal Land Policy and Management Act (FLPMA) and the Federal Advisory Committee Act of 1972 (FACA), the U.S. Department of the Interior, Bureau of Land Management (BLM) Idaho Falls District Resource Advisory Council (RAC), will meet as indicated below.

DATES: The RAC will next meet in Idaho Falls, Idaho on January 20–21, 2009 for a two-day meeting. The first day will be new member orientation in the afternoon starting at 2 p.m. at the Idaho Falls BLM Office, 1405 Hollipark Drive, Idaho Falls, Idaho. The second day will be at the same location starting at 8 a.m. with electing a new chairman, vice chairman and secretary. Other meeting topics include noxious weeds, power line corridors, Snake River Activity Operations Plan, Upper Snake RMP and Recreation RAC items. Other topics will be scheduled as appropriate. All meetings are open to the public.

SUPPLEMENTARY INFORMATION: The 15-member Council advises the Secretary of the Interior, through the Bureau of Land Management, on a variety of planning and management issues associated with public land management in the BLM Idaho Falls District (IFD), which covers eastern Idaho.

All meetings are open to the public. The public may present written comments to the Council. Each formal Council meeting will also have time allocated for hearing public comments. Depending on the number of persons wishing to comment and time available, the time for individual oral comments may be limited. Individuals who plan to attend and need special assistance, such as sign language interpretation, tour transportation or other reasonable accommodations, should contact the BLM as provided below.

FOR FURTHER INFORMATION CONTACT: Joanna Wilson, RAC Coordinator, Idaho Falls District, 1405 Hollipark Dr., Idaho Falls, ID 83401. Telephone: (208) 524–7550. E-mail: *Joanna_Wilson@blm.gov.*

Dated: December 8, 2008.

Joanna Wilson,

RAC Coordinator, Public Affairs Specialist.

[FR Doc. E8–29709 Filed 12–15–08; 8:45 am]

BILLING CODE 4310–GG–P

DEPARTMENT OF THE INTERIOR

Bureau of Land Management

[WY–923–1310–FI; WYW172444]

Wyoming: Notice of Proposed Reinstatement of Terminated Oil and Gas Lease

AGENCY: Bureau of Land Management, Interior.

ACTION: Notice of proposed reinstatement of terminated oil and gas lease.

SUMMARY: Under the provisions of 30 U.S.C. 188(d) and (e), and 43 CFR 3108.2–3(a) and (b)(1), the Bureau of Land Management (BLM) received a petition for reinstatement from Chesapeake Exploration, L.L.C. for competitive oil and gas lease WYW172444 for land in Converse County, Wyoming. The petition was filed on time and was accompanied by all the rentals due since the date the lease terminated under the law.

FOR FURTHER INFORMATION CONTACT: Bureau of Land Management, Pamela J. Lewis, Chief, Branch of Fluid Minerals Adjudication, at (307) 775–6176.

SUPPLEMENTARY INFORMATION: The lessee has agreed to the amended lease terms for rentals and royalties at rates of $10.00 per acre, or fraction thereof, per year, and 16⅔ percent, respectively. The lessee has paid the required $500 administrative fee and $163 to reimburse the Department for the cost of this **Federal Register** notice. The lessee has met all the requirements for reinstatement of the lease as set out in Sections 31(d) and (e) of the Mineral Lands Leasing Act of 1920 (30 U.S.C. 188), and the Bureau of Land Management is proposing to reinstate lease WYW172444 effective June 1, 2008, under the original terms and conditions of the lease and the increased rental and royalty rates cited

Bureau of Land Management
Las Vegas Field Office
4701 N. Torrey Pines Drive
Las Vegas, NV 89130-2301

Public Meeting Announcement

Please attend one of the following scoping meetings to help identify the range, or scope, of issues related to the Searchlight Wind Energy Project. The issues identified during the scoping process will be considered and addressed during preparation of the Environmental Impact Statement. All meetings will be held in an open house format with a brief presentation.

SEARCHLIGHT
Tuesday, January 27, 2009
4 pm – 7 pm;
presentation at 4:30 pm
Searchlight Community Center
200 Michael Wendell Way
Searchlight, NV 89046

LAUGHLIN
Wednesday, January 28, 2009
6 pm – 9 pm;
presentation at 6:30 pm
William G. Bennett
Elementary School
2750 South Needles Hwy
Laughlin, NV 89029

BOULDER CITY
Thursday, January 29, 2009
5 pm – 8 pm;
presentation at 5:30 pm
Boulder City Library
701 Adams Blvd
Boulder City, NV 89005

Participants will have the opportunity to submit verbal or written comments at all meetings.

Bureau of Land Management Draft EIS

Searchlight
WIND ENERGY PROJECT

January 2009

Introduction

The Bureau of Land Management (BLM) is preparing an Environmental Impact Statement (EIS) for the proposed Searchlight Wind Energy project. Searchlight Wind Energy, LLC has submitted an application for the construction, operation, and maintenance of a wind energy generation site on public lands adjacent to the town of Searchlight, Nevada. The first step in the EIS process is public scoping to identify issues and concerns that should be addressed in the EIS. The 60-day public scoping period for the Searchlight Wind Energy Project was initiated on December 16, 2008. This newsletter is being provided to potentially interested parties to describe the project, announce public scoping meetings, and provide opportunities to comment on the project.

Project Description

Searchlight Wind, LLC is proposing to develop an approximately 370 megawatt (MW) wind energy facility consisting of up to 161 wind turbine generators. The project is located on 24,383 acres of public lands east of Searchlight, Nevada (see attached map on page 3). The facility, depending upon the wind, would have the capacity to generate enough electricity to power over 100,000 households. This assumes an average household use of approximately 9,000 kilo watt hours per year.

The proposed wind turbine towers would be up to 262 feet tall from the ground to the hub with blades extending up to an additional 153 feet. The total height of each turbine would be up to 415 feet.

In addition to the wind turbines, the proposed project would require the construction of new access roads, an overhead transmission line, two electrical substations, an electrical interconnection facility/switchyard, an operations and maintenance building, and temporary and permanent laydown areas. Five permanent meteorological masts would be installed on the site to measure the wind speed and direction across the site over the life of the project. The exact areas of each component are subject to change as the project design develops and the EIS process proceeds.

The EIS Process

The proposed facilities would be on public land managed by the BLM; therefore, the project is considered a Federal action requiring review under and compliance with the National Environmental Policy Act of 1969 (NEPA). Under NEPA, actions such as the Searchlight Wind Energy Project must consider the potential effects on the environment including human, natural, and cultural resources.

Human Environment – land use, social and economic conditions, environmental justice, visual characteristics, noise

Natural Environment – air, geology, soils, water, vegetation, wildlife, special status and avian species

Cultural Environment – prehistoric and historic archaeological sites, and traditional cultural lifeways and resources

BLM

Las Vegas Field Office / Nevada

The NEPA process for the proposed project is anticipated to occur within a 24-28 month timeframe and consist of several steps depicted in the flow chart below.

At this early stage in the process, BLM (the lead Federal agency) will identify the range or scope of public and agency issues through comments received in meetings and discussions with relevant agencies and the public.

Once the BLM has an understanding of the issues, the study team will begin to gather data on resources within the study area. Based on the description of the proposed project and any alternatives to be evaluated; issues identified; and resource data, the EIS team will assess potential impacts that could result from the project and identify measures to mitigate, or reduce those impacts.

Public Scoping

BLM understands the importance of involving the public and agencies in the planning process. During public scoping, BLM encourages comments to identify issues and concerns that are important in the region and that need to be addressed in the EIS.

The first opportunity for you to participate will be the upcoming public scoping meetings. These public meetings are planned for **Boulder City, Searchlight, and Laughlin, Nevada** in January of 2009 as noted on the back of this newsletter. These meetings also will be announced in local newspapers and at www.nv.blm.gov/vegas/default.html. Comments can be submitted orally or in writing at the public meetings, as well as by mail, fax or e-mail. Comments will be most helpful in the preparation of the Draft EIS if they are submitted by February 17, 2009.

The scoping meetings will be held in an open house format, with a brief presentation to provide an overview of the project and EIS process. Project team members will be available at display stations to answer questions and take note of your comments.

BLM will provide opportunities to comment on the status of the project throughout the EIS process. Preliminary work on the Draft EIS has already started; the scoping process will help BLM identify issues not already considered in the Draft and help in the formulation of the alternatives to be presented in the Draft. A Notice Of Availability (NOA) will be published by the BLM and the Environmental Protections Agency (EPA) in the Federal Register when the Draft EIS is published. The EPA-NOA starts the 45-day public review and comment period where BLM will conduct public meetings to accept comments on the draft document. Written comments will be accepted during that time.

If you have questions, would like to be on the mailing list, or would like to speak to a project representative, please use the contact information below.

How to Submit Written Comments

Remember, comments will be most helpful if submitted in writing by February 17, 2009.

E-mail: Searchlight_Wind_Energy_EIS@blm.gov
Fax: 702-515-5010
Mail: BLM Las Vegas Field Office,
4701 North Torrey Pines Drive,
Las Vegas, NV 89130-2301
Phone: 702-515-5000

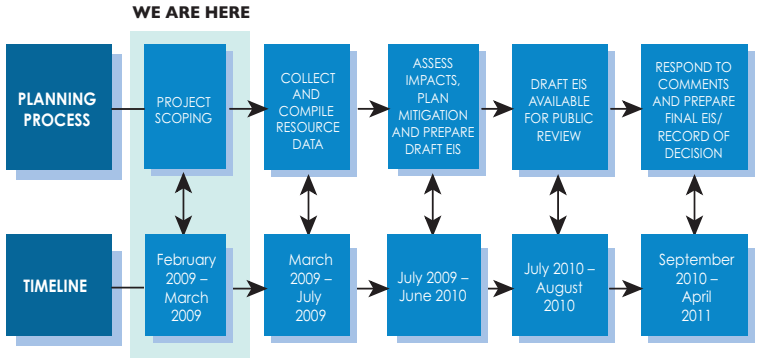

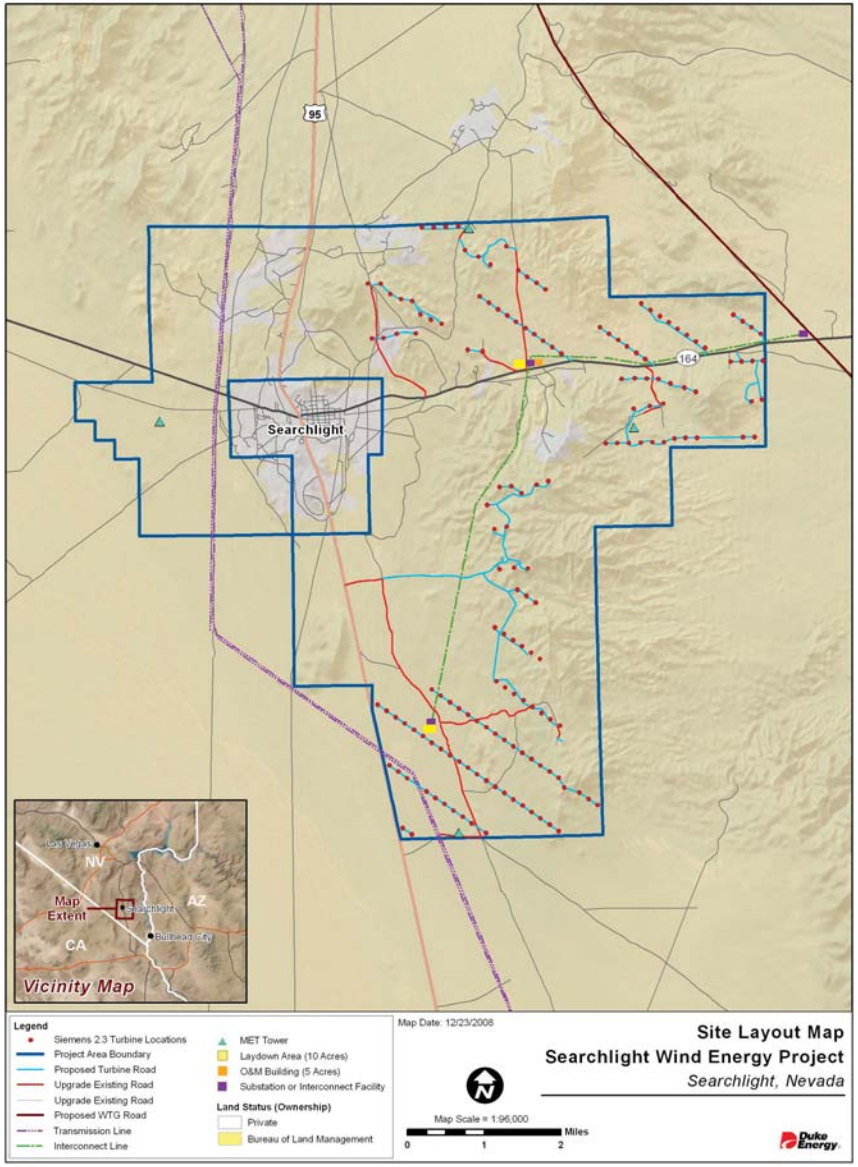

SEARCHLIGHT WIND ENERGY PROJECT
PUBLIC MEETING ANNOUNCEMENT

The Bureau of Land Management (BLM) is holding public scoping meetings to receive comments on a proposed wind energy project near the town of Searchlight, Nevada. Please plan to attend one of the following open house meetings:

SEARCHLIGHT
Tuesday,
January 27, 2009
4 pm – 7 pm;
brief presentation
at 4:30 pm
Searchlight Community Center
200 Michael Wendell Way
Searchlight, NV 89046

LAUGHLIN
Wednesday,
January 28, 2009
6 pm – 9 pm;
brief presentation
at 6:30 pm
William G. Bennett Elementary School
2750 South Needles Hwy
Laughlin, NV 89029

BOULDER CITY
Thursday,
January 29, 2009
5 pm – 8 pm;
brief presentation
at 5:30 pm
Boulder City Library
701 Adams Blvd.
Boulder City, NV 89005

For questions on this project please contact Mark Chandler, BLM Project Manager, at 702-515-5000.

PRESS RELEASE DISTRIBUTION LIST

General Media

Television Stations

KVBC TV 3
KVVU TV 5
KLAS TV 8
KLVX TV 10
KTNV TV 13
KVWB TV 21
KVMP 41
Telemundo 39

Newspapers

(Daily)
Las Vegas Review-Journal
Las Vegas Sun

(Weekly)
City Life
Boulder City News
LV Asian Journal
The Spectrum

(Other)
Associated Press
Henderson Home News
Jewish Reporter
High Country News
The Business Voice (Las Vegas Chamber of Commerce)
View Neighborhood Newspapers
Associated General Contractors
Pahrump Valley Times
Mesquite Local News

Radio

KNPR 89.5 FM
KNEWS 970, 1140, 1250 AM
KUNV 91.5 FM
KDWN 720 AM
KLAV 1230 AM
KNYE 95.1 FM
KXNT 840 AM
Metro Networks/Shadow Broadcasting
Highway Radio

Spanish Language

Entravision Communications
El Mundo Newspaper

Elected Officials

Senators

Harry Reid
John Ensign

Congressman

Shelly Berkley

State Senate

John Porter

Other

Public Affairs Office – City of Las Vegas
Public Communications Department – Clark County
Public Affairs Office – Humboldt-Toiyabe National Forest

BLM Nevada News

FOR IMMEDIATE RELEASE January 22, 2009

Contact: Hillerie Patton, 702-515-5046

BLM to hold Public Meetings on Wind Energy Proposal near Searchlight

LAS VEGAS – The Bureau of Land Management (BLM) Las Vegas Field Office is seeking public input on issues to address the development of a draft Environmental Impact Statement (EIS) on a wind-powered electric generating facility proposed near Searchlight. The meetings will be held Tuesday, January 27 at the Searchlight Community Center from 4 p.m. – 7 p.m.; Wednesday, January 28 at the William G. Bennett Elementary School in Laughlin from 6 p.m. – 9 p.m., and Thursday, January 29 at the Boulder City Library from 5 p.m. – 8 p.m. The meetings will be held in an open house format with a brief presentation.

The BLM published Notice of Intent (NOI) in the *Federal Register* on December 16, 2008. A notice of intent advises the public of the preparation of an EIS to evaluate any potential impacts, which could occur from the construction and operation of the project. These public meetings are the first step in the EIS study process. The wind generation facility would be located on approximately 24,383 acres near Searchlight, and could generate enough electricity for more than 90,000 homes. In addition to the 161 wind turbines that would be constructed, the project would require new access roads, an overhead transmission line, two electrical substations, and other facilities. The wind turbines could be up to 415 feet tall depending on final design.

The public is encouraged to submit written comments before February 17, 2009. Comments may be submitted in writing to: Searchlight_Wind_Energy_EIS@blm.gov, or to the BLM Las Vegas Field Office, 4701 North Torrey Pines Drive, Las Vegas, NV 89130-2301, 702.515.5010 (fax). For more information, please contact: Mark Chandler at 702-515-5064.

-BLM-

The BLM manages more land – 258 million acres – than any other Federal agency. This land, known as the National System of Public Lands, is primarily located in 12 Western States, including Alaska. The Bureau, with a budget of about $1 billion, also administers 700 million acres of sub-surface mineral estate throughout the nation. The BLM's multiple-use mission is to sustain the health and productivity of the public lands for the use and enjoyment of present and future generations. The Bureau accomplishes this by managing such activities as outdoor recreation, livestock grazing, mineral development, and energy production, and by conserving natural, historical, cultural, and other resources on public lands.

APPENDIX B

PUBLIC SCOPING MEETINGS

Boards
Presentation
Sign-in sheet
Comment form

Bureau of Land Management Draft EIS

SEARCHLIGHT
WIND ENERGY PROJECT

BLM

PUBLIC SCOPING MEETING

The BLM wants your input on the scope or range of issues related to the Searchlight Wind Energy Project. The issues identified during scoping will be considered and addressed during preparation of the Environmental Impact Statement (EIS).

Las Vegas Field Office / Nevada

Roles and Responsibilities

- **Duke Energy –**
  As the project proponent, Duke will develop, construct, and operate the Project.
- **BLM –**
  BLM manages the land on which the project is proposed. As the Responsible Lead Agency, BLM is responsible for preparing the EIS to comply with the National Environmental Policy Act (NEPA).
- **WAPA –**
  Participating as Cooperating Agency under NEPA, WAPA owns and operates the 230kV transmission line to which the Project will connect and deliver power into the electrical grid.
- **URS –**
  Third-party contractor assisting BLM with preparation of the EIS.

What is Scoping?

The National Environmental Policy Act requires that there shall be an early and open process for determining the scope of issues to be addressed and for identifying the significant issues related to a proposed action. This process is termed Scoping. Scoping is a continual process that ensures the content of the environmental analysis is focused properly. Scoping is an opportunity for persons who would be affected or interested to provide input and to express their environmental concerns regarding the proposed project.

Overall scoping helps to:

- Identify the relevant issues related to the resources and values in the project area
- Identify feasible alternatives

Purpose and Need

- To provide a local, domestic energy source
- To reduce greenhouse gas emissions that result from fossil fuel energy generation
- To fulfill many state and national renewable energy policies, including the Nevada Renewable Portfolio Standard (NRPS) (Assembly Bill 366, Senate Bill 372) which requires that 15 percent of all electricity generated in Nevada be renewable by the year 2013
- To serve existing and future needs for power in Nevada

Project Description

- Facility will provide approximately 370 megawatts (MW) of electricity – power to more than 100,000 homes
- Facility components include:
  - 161 wind turbines
  - New and upgraded access roads
  - Overhead transmission lines
  - Operations and Maintenance (O&M) building
  - Electrical interconnection / switchyard
  - Two electrical substations
  - Two lay down areas (one temporary, one permanent)
  - Five permanent meteorological masts

Project Location

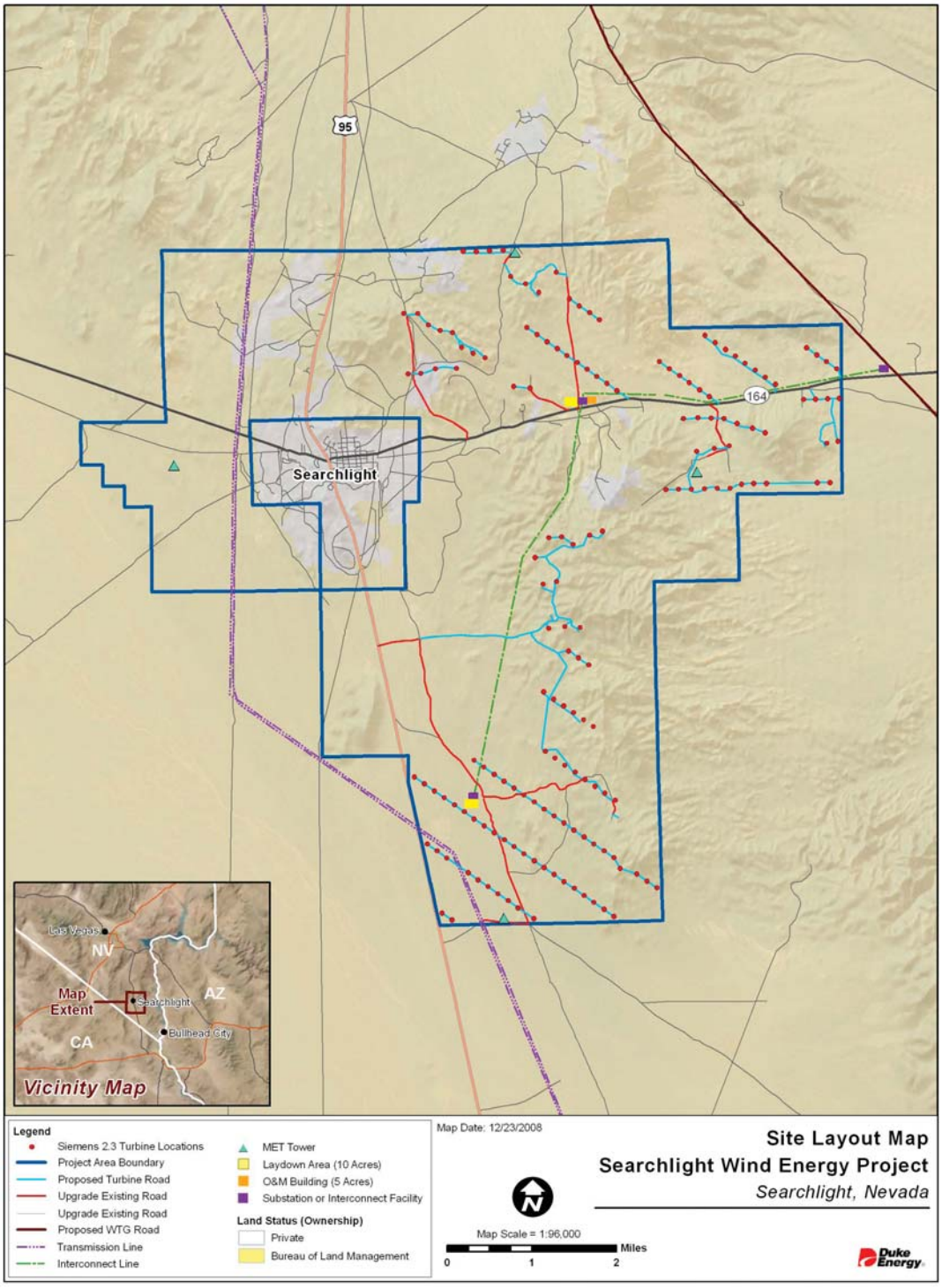

Typical Structure Example

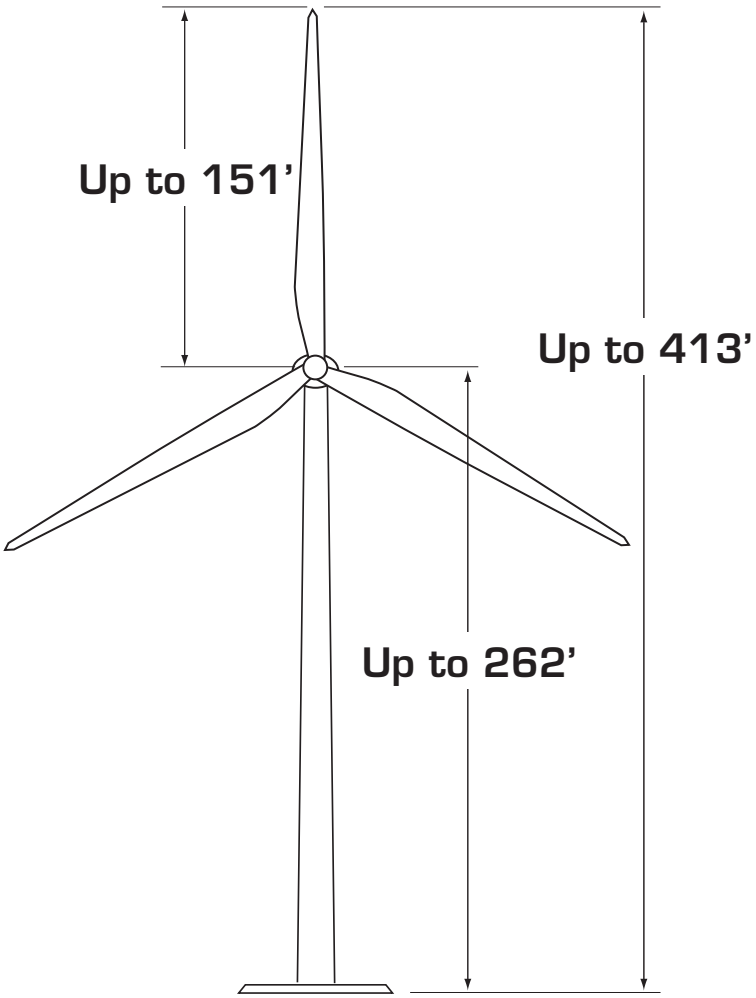

Typical Wind Turbine Construction

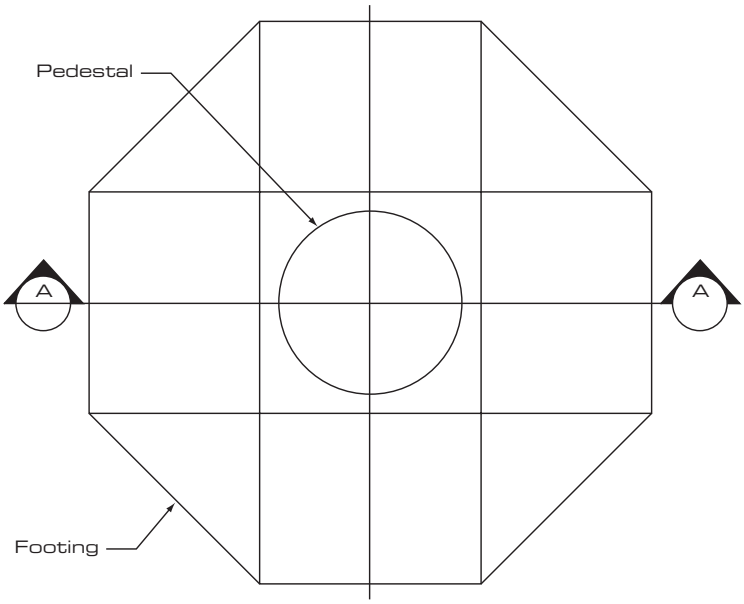

WTG Foundation Plan

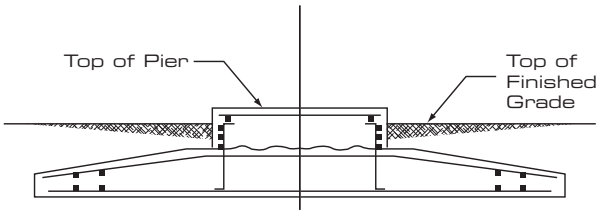

Section A-A

EIS Studies

The EIS will analyze the existing local environment and potential impacts that could occur as a result of the proposed project. Ways to mitigate, or reduce impacts on the environment will also be identified. Topics to be addressed in the EIS include:

Human Environment - land use, social and economic conditions, environmental justice, visual characteristics and noise

Natural Environment - air, geology, soils, water, vegetation, wildlife, special status and avian species

Cultural Environment – prehistoric and historic archaeological sites, and traditional cultural lifeways and resources

How to Make Your Comments Most Effective

One comment can make a difference.

- Identify specific information that should be considered during the EIS process
- Offer a specific idea of how to address a particular concern
- Provide specific information about how a particular element of the project would affect you
- Speak to a project team member if you have any questions on project information

Bureau of Land Management Draft EIS

SEARCHLIGHT
WIND ENERGY PROJECT

BLM

Public Information and Feedback Opportunities

- 60-day scoping period to identify initial project issues
- Scoping meetings

SEARCHLIGHT
Tuesday, January 27, 2009
4 pm – 7 pm;
presentation at 4:30 pm
Searchlight Community Center
200 Michael Wendell Way
Searchlight, NV 89046

LAUGHLIN
Wednesday, January 28, 2009
6 pm – 9 pm;
presentation at 6:30 pm
William G. Bennett
Elementary School
2750 South Needles Hwy
Laughlin, NV 89029

BOULDER CITY
Thursday, January 29, 2009
5 pm – 8 pm;
presentation at 5:30 pm
Boulder City Library
701 Adams Blvd.
Boulder City, NV 89005

- Public meetings and 45-day public review period on Draft EIS in fall 2010
- Mailing list and newsletter updates throughout the project
- Contact BLM Project Manager Mark Chandler, 702.515.5000

Las Vegas Field Office / Nevada

Planning Process

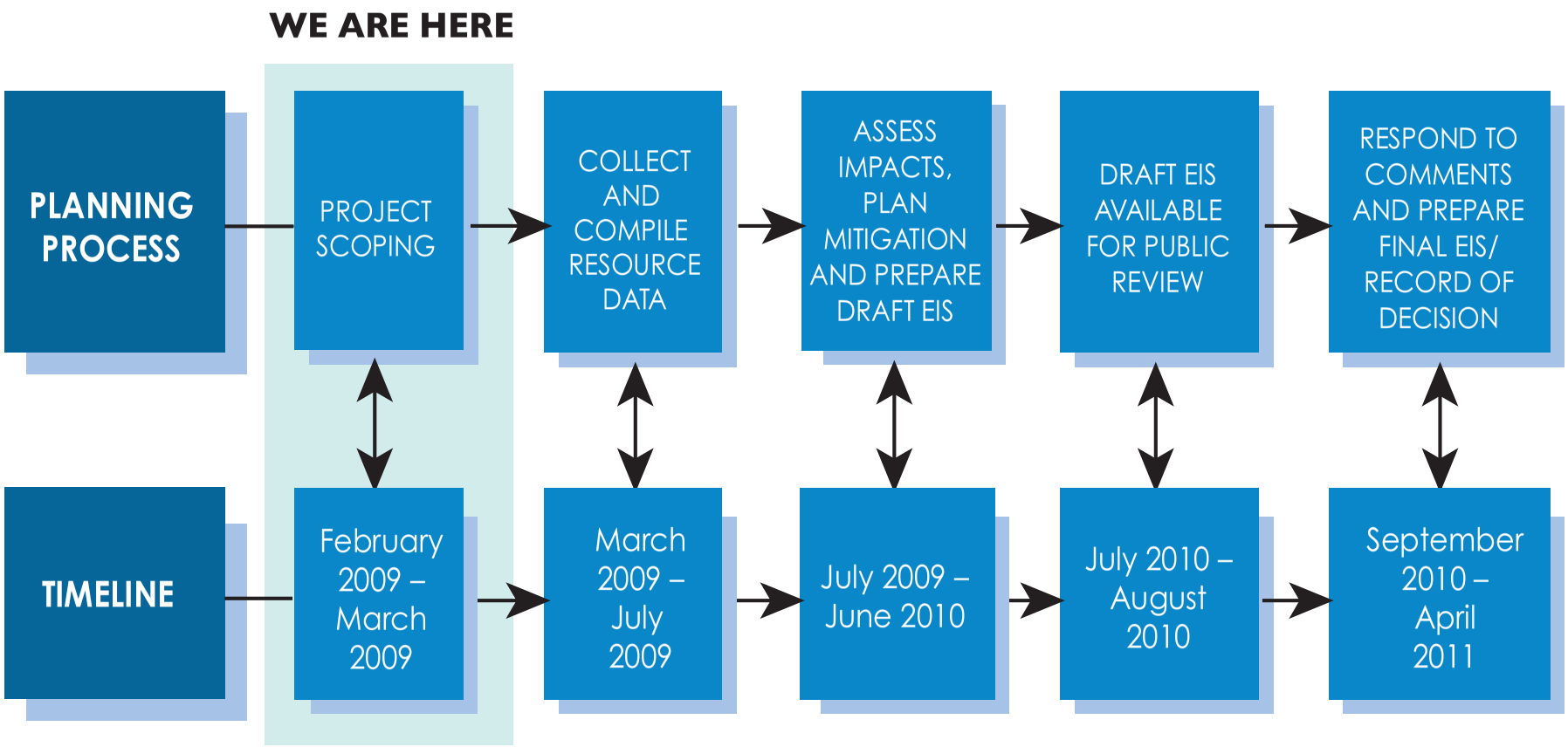

Bureau of Land Management Draft EIS

SEARCHLIGHT

WIND ENERGY PROJECT

PUBLIC SCOPING MEETINGS

January 2009

BLM

Las Vegas Field Office / Nevada

Project Team

- Duke Energy
  (Searchlight Wind Energy, LLC)
- Bureau of Land Management (BLM)
- Western Area Power Administration (Western)
- URS (NEPA consultant)

Need for Agency Action

- BLM is responding to an application from Searchlight Wind Energy, LLC for land use permits.
- Western is responding to an application to interconnect the proposed wind energy facility with Western' electrical transmission system.

Purpose of Meeting

- To provide information to you regarding the proposed project.
- To hear your issues and concerns related to the proposed project.

What is Scoping?

- Helps to identify issues that should be addressed in the EIS.
- Helps to identify feasible alternatives that should be evaluated in the EIS.
- Provides the public and other interested parties the opportunity to express comments and concerns.

Project Description

- Located on 24,383 acres of public land in the vicinity of Searchlight, Nevada

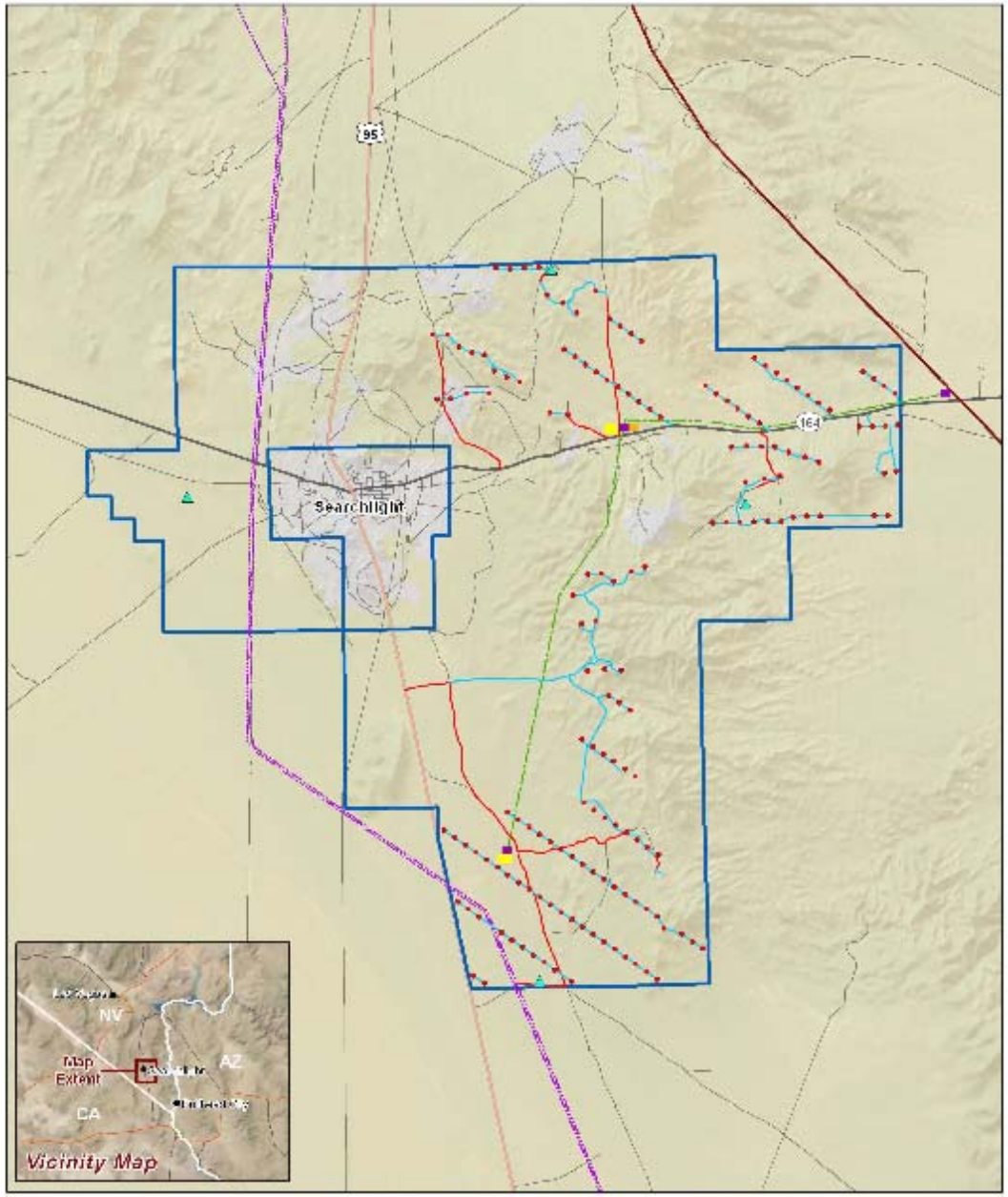

Project Description

- Would generate up to 370 megawatts of electricity
- Up to 161 wind turbines
- Power delivery over Western's Mead-Davis 230-kV transmission line
- Associated facilities
  - Access roads
  - Transmission lines
  - Switchyard/substations
  - Meteorological masts
  - Operations and maintenance facility

Project Description

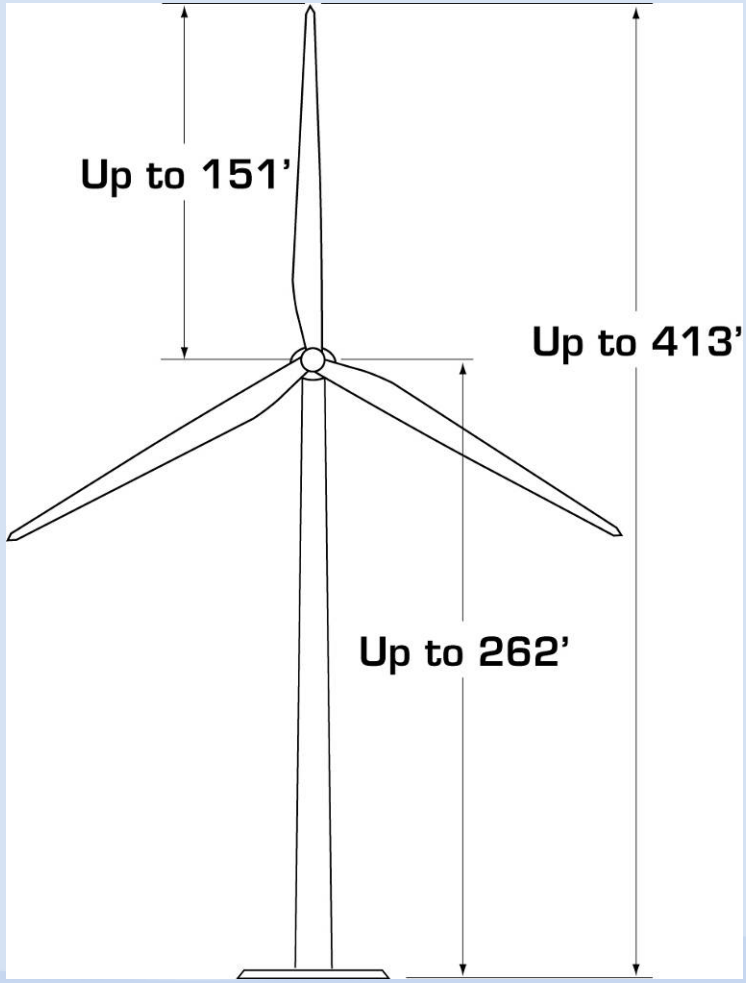

National Environmental Policy Act (NEPA)

- "The National Environmental Policy Act is our basic national charter for protection of the environment." [40 CFR Part 1500.1(a)]
- An Environmental Impact Statement (EIS) will be prepared in compliance with NEPA.

Resources to be Analyzed

- Land uses
- Visual resources
- Noise
- Biological resources
- Cultural resources
- Air quality
- Geology and soils
- Water resources
- Socioeconomic conditions
- Environmental justice
- Public health and safety
- Environmental regulatory compliance
- Other resources as directed by BLM

Studies Proposed and Underway

Studies Underway

- Avian and bat surveys
- Aerial photographs
- Refined topography mapping

Proposed Studies

- Sociological and economic study
- Visual studies and simulations of the proposed project
- Noise studies

NEPA Process

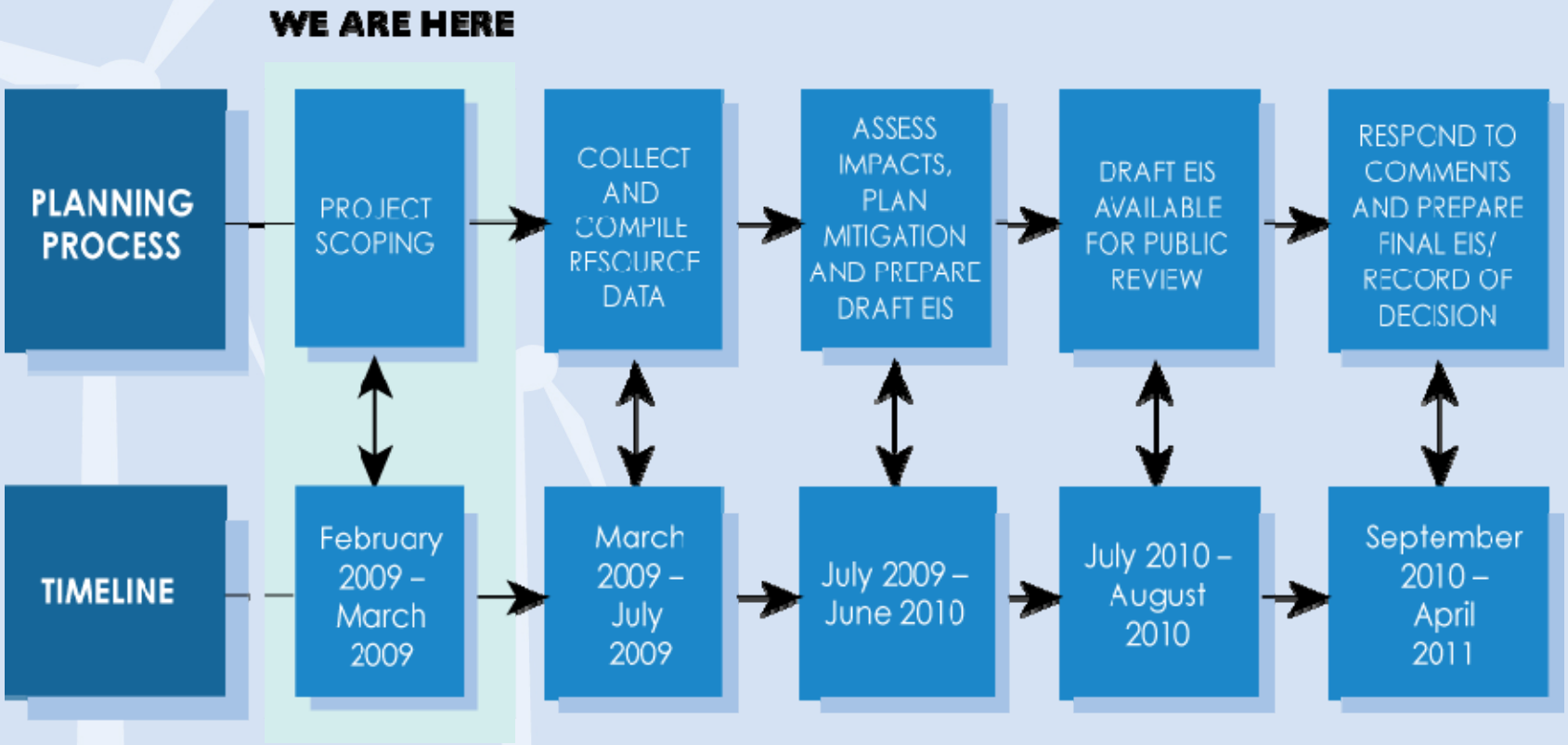

How You Can Participate

- Complete a comment form with your name and address.
- Submit written comments to:
  - Searchlight_Wind_Energy_EIS@blm.gov
  - Fax: 702-515-5010
  - BLM Las Vegas Field Office
    4701 N. Torrey Pines Drive
    Las Vegas, NV 89130-2301

How You Can Participate

- Public meetings and 45-day review period on Draft EIS
- Mailing list and newsletter updates throughout the project
- www.nv.blm.gov/vegas/default.html
- Contact BLM Project Manager Mark Chandler, 702-515-5000

How to Make Your Comments Most Effective

One comment can make a difference.

- Identify specific information that should be considered during the EIS process.
- Offer a specific idea of how to address a particular concern.
- Provide specific information about how a particular element of the project would affect you.

Bureau of Land Management Draft EIS

SEARCHLIGHT
WIND ENERGY PROJECT

Scoping Meeting Sign In Form

January 2009

BLM

Las Vegas Field Office / Nevada

PLEASE SIGN IN

Date: _____

Name	Mailing Address	Phone Number	Do you wish to be added to the mailing list for this project?
			☐ Yes ☐ No
			☐ Yes ☐ No
			☐ Yes ☐ No
			☐ Yes ☐ No
			☐ Yes ☐ No
			☐ Yes ☐ No
			☐ Yes ☐ No
			☐ Yes ☐ No
			☐ Yes ☐ No
			☐ Yes ☐ No
			☐ Yes ☐ No
			☐ Yes ☐ No
			☐ Yes ☐ No
			☐ Yes ☐ No
			☐ Yes ☐ No
			☐ Yes ☐ No
			☐ Yes ☐ No
			☐ Yes ☐ No
			☐ Yes ☐ No

Copies of this sign-in form may become part of the public record associated with this proposed project. Individuals requesting that their name and address be withheld from public review or from disclosure under the Freedom of Information Act must check "Yes" in the personal information column. Such requests will be honored to the extent allowed by law.

Bureau of Land Management Draft EIS

SEARCHLIGHT
WIND ENERGY PROJECT

BLM

SCOPING COMMENT FORM

Bureau of Land Management, Las Vegas Field Office/Nevada

At this early stage in the planning process, the Bureau of Land Management (BLM) is holding scoping meetings to help identify the range, or scope, of issues related to the Searchlight Wind Energy Project. The issues identified by the public during the scoping process will be considered and addressed during preparation of the environmental impact statement. Please take a few minutes to answer the questions below and return this sheet as addressed on the other side. Comments would be most helpful if received on or before the scoping period closing date of **February 17, 2009.**

Please provide your current mailing address and/or any additional names and addresses you think should be included on our mailing list.

Meeting Location: _____

Your Name: _____ Name: _____

Address: _____ Address: _____

City/State/Zip: _____ City/State/Zip: _____

Please check all that apply:

__ Add my name to the mailing list for this project

__ Do not include my name on the mailing list

__ Withhold my name/address to extent allowed by law (only for persons not representing organizations)*

*All comments received by BLM become part of the public record associated with this proposed project. Accordingly, your comments (including name and address) will be available for review by any person that wishes to review the record. At your request, we will withhold your name and address to the extent allowed by the Freedom of Information Act or any other law.

1. Please describe any issues or concerns that should be addressed in the environmental impact statement. _____

2. Please provide any other comments you may have on the overall project. _____

Fold, tape top of form, and mail your comments to the address below:

Mark Chandler
BLM Project Manager
BLM Las Vegas Field Office
4701 N. Torrey Pines Dr.
Las Vegas, Nevada 89130

Place stamp here