CHAPTER 2 – PROPOSED ACTION AND ALTERNATIVES

2.1 INTRODUCTION

This chapter provides a description of the proposed action (SunZia Southwest Transmission Project, or Project), the alternatives analyzed in this EIS, the process used to identify the alternatives, the alternatives that were considered but eliminated from detailed study, and the BLM preferred alternative.

The alternatives consist of different routes for placement of the two proposed 500 kV transmission lines that would originate at the proposed SunZia East Substation in New Mexico, and terminate at the permitted Pinal Central Substation in Arizona. The No Action alternative is also analyzed in this EIS, in which the right-of-way for the Project would not be granted. In order to facilitate characterization of the affected environment (Chapter 3) and potential environmental impacts (Chapter 4), the alternative transmission line routes have been divided into three groups of alternative subroutes. The alternative subroutes comprising each of the groups include combinations of the smallest linear units, or links.

The description of the proposed action provided in Section 2.4 is consistent among all alternatives. This Project description, including the design features of facilities, estimated area of ground disturbance, and construction activities, provides the basis for the assessment of impacts in Chapter 4. A summary comparison of all alternatives is provided in Section 1.1.

2.1.1 Study Process Completed to Date

This EIS has been developed through a comprehensive process, with contribution from a team of interdisciplinary resource specialists, and the consideration of issues and concerns raised by the public and agencies. The EIS process allows for identification of issues, refinement of alternatives, and disclosure of potential environmental effects that could result from the Project. Steps in the process are shown on Figure 2-1 and are summarized below.

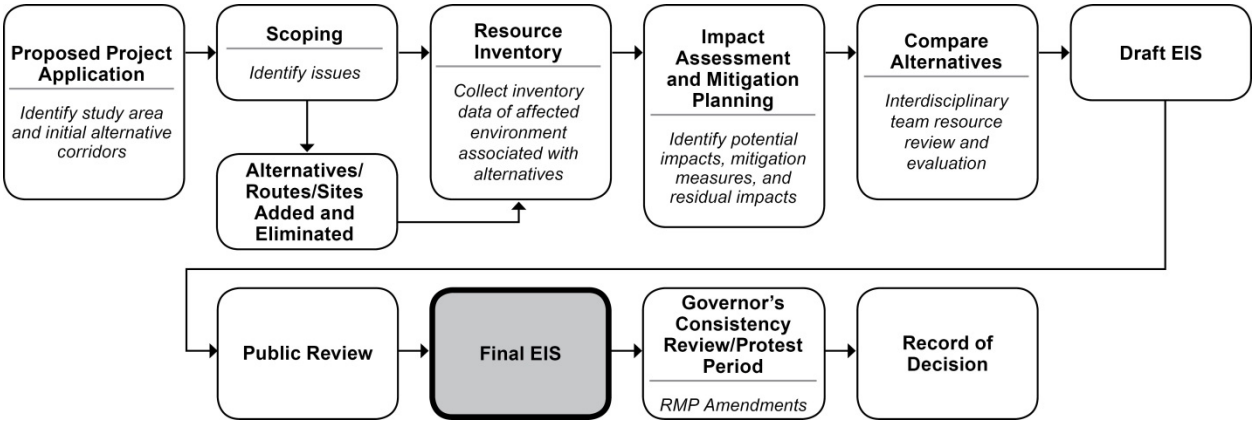

Figure 2-1. Environmental Study Process

Proposed Project Application – Environmental studies were initiated with SunZia's application to the BLM for right-of-way to construct the Project on BLM-administered land. In cooperation with the BLM and other land management agencies, the Applicant defined the Project study area and conducted a regional siting study to identify general corridors within which transmission lines could be constructed and operated to meet the Applicant's objectives.

Scoping – Scoping was held early in the process to identify environmental issues (Chapter 1, Table 1-3), which helped to determine the level of analysis and to refine Project alternatives (Chapter 2). The Project description, study area, and preliminary alternative transmission line routes were reviewed by the public and agencies through scoping, which initiated the EIS process. The process and results are documented in the Scoping Report (BLM 2010a) and in Chapter 5. In response to public comment, the Project study area was expanded to allow consideration of additional routes. Alternatives were added in New Mexico that would avoid impacts to military uses and sensitive resources in the Rio Grande Valley; and alternatives were added in Arizona that would avoid sensitive resources in the San Pedro River Valley and Sulphur Springs Valley.

Resource Inventory – Each alternative route and substation site was inventoried to characterize the Project area. Collection and review of existing data helped to establish the baseline environmental conditions (Chapter 3) from which potential Project impacts could be assessed.

Impact Assessment and Mitigation Planning – The alternative routes and substation sites were assessed to identify potential effects (initial impacts) on the environment that could result from the construction, operation, and decommissioning of the Project alternatives (Chapter 4). Where warranted, measures beyond standard mitigation were recommended to minimize impacts. (See tables 2-10 and 2-11 for a list of the standard and selective mitigation measures that could be employed.) The impacts remaining after mitigation are referred to as residual impacts.

Route Comparison and Selection of the Preferred Alternative – Through a systematic analysis, all of the alternative routes were evaluated and compared in order to identify the preferred alternative.

Public Review of Draft EIS – The Draft EIS was published and made available for public comment. Information on the public review process and comments on the Draft EIS are provided in Section 5.5 of this Final EIS.

Review Following Final EIS – Protest Period and Governor's Consistency Review related to RMP amendments.

Record of Decision – The BLM issues a ROD following the protest period and Governor's Consistency Review.

2.2 DEVELOPMENT OF PROPOSED ACTION AND ALTERNATIVES

In order to identify potential locations for the proposed transmission line routes, information was gathered to determine environmental, engineering, and agency/public/political opportunities and constraints within the study area. As a first step towards identifying feasible routes and

substation sites, potential alternatives were reviewed based on their ability to maximize opportunities to locate the proposed transmission lines within existing corridors, while avoiding areas of higher constraint or sensitivity. Results of this evaluation were used to identify alternatives that were reasonable and feasible in response to opportunity and constraint criteria. A phased approach was used in the development and refinement of the study area and the alternative routes within it. This study resulted in the identification of the alternatives evaluated in this EIS and described in Section 2.3. The alternatives screening process is described in the Opportunities and Constraints Analysis (Appendix A) was completed in November 2011.

2.2.1 Study Area Definition

The study area was defined to include an area within which potential routes for the proposed 500 kV transmission lines could be located between the terminal points in Lincoln County, New Mexico (proposed SunZia East Substation) and Pinal County, Arizona (permitted Pinal Central Substation). Construction and operation of the proposed SunZia 500 kV transmission lines along one of these routes would therefore respond to the purpose and need, as well as the Project objectives; i.e., to promote interconnections of existing and planned transmission and generation facilities in New Mexico and Arizona.

Using terrain data and maps depicting locations of existing linear facilities, a general study area boundary and potential alternative routes within it were identified. Major physiographic features, jurisdictional boundaries, specially designated areas, and existing utility corridors were then used to define the study area boundary. Generalized corridors within the study area were identified using similar rationale.

The initial study area encompassed 10 counties in New Mexico and 5 counties in Arizona. The eastern terminus of the study area is located in Lincoln County, New Mexico, south of the town of Corona; selected because of its strategic location to potential sources of renewable energy. The western terminus of the study area is located in Pinal County, near Eloy, Arizona; selected because it can provide direct access to the existing high-voltage electrical infrastructure in the region.

In order to identify potential locations for transmission line corridors and substation siting areas, inventoried and mapped data were used to determine environmental, engineering, and agency/public opportunities and constraints within the study area. The approach used to identify these opportunities and constraints and the results from this analysis are described below.

2.2.2 Evaluation of Opportunities and Constraints

The identification of opportunities and constraints was based on a sensitivity analysis. As used here, sensitivity is defined as a measure of the probable adverse response of each resource to direct and indirect impacts associated with the construction, operation, and decommissioning of the transmission lines, substations, and other Project facilities.

2.2.2.1 Siting Opportunities

Opportunities for new transmission lines and substation sites generally included locations consisting of, or in proximity to, existing or planned linear facilities, previously disturbed corridors, or corridors designated for future use as utility corridors or in conjunction with industrial use(s). Typically, these opportunities include existing transmission lines, major transportation corridors (interstate and state highways), pipeline corridors, railroads, and canals. These corridors provide potential access for construction and maintenance of transmission lines and substations. Existing linear corridors generally minimize ground disturbance, as well as biological, cultural, soil erosion, land use, and visual resources impacts. Linear features with high opportunity levels include:

- Transmission lines, 230 kV or greater
- Federally designated overhead transmission line corridors
- DOE West-wide Energy Corridors (EPAct Section 368)

Linear features with moderate opportunity levels include:

- Transmission lines, less than 230 kV
- Natural gas/petroleum pipelines, 6-inch diameter or greater
- Railroads
- Interstates, U.S. highways, state highways, and other primary roads

2.2.2.2 Siting Constraints and Environmental Sensitivity

Criteria used in making the determination of environmental sensitivity include consideration for the following:

- **Protective Status –** a measure of the formal concern expressed for a resource either through legal protection or by assignment of special-status species.
- **Resource Value –** a measure of rarity, high intrinsic worth, singularity, or diversity of a resource within an area.
- **Present and Future Use** – a measure of the level of conflict based on land management policies and/or use that also may include issues of specific concern to the agencies and public.

With consideration of the above criteria, the environmental data gathered during the regional inventory were evaluated and given relative sensitivity levels that were used to determine opportunities and constraints, as follows:

- **Exclusionary/Maximum Constraint Areas** – Areas where legal status (i.e., wilderness areas or jurisdictional policy [e.g., active airports]) would prohibit, or most likely prohibit, the location of transmission or substation facilities.
- **High Sensitivity/Constraint Areas** – Areas determined to be less suitable because of unique, highly valued, complex, historic, or protected resources and significant potential

conflict with use, or areas posing substantial hazards to construction and operation of the transmission lines and substations.

- **Moderate Sensitivity/Constraint Areas** – Areas of potential environmental effects due to impacts to important or valued resources, resources assigned special status, or some conflict with use. Locations of moderate sensitivity are considered to be moderate constraint areas and potentially suitable for siting the transmission lines and substations.
- **Low Sensitivity/Constraint Areas** – Areas where resource conflicts identified through the feasibility study process are minimal. These areas are considered to be of minimal constraint, or high opportunity for locating the proposed transmission lines and substations, particularly in association with existing transmission line corridors.

Levels of sensitivity were assigned based on different resource features and the above definitions. Table 2-1 and the tables included in Appendix A provided guidelines for regional data classification.

Once classifications were assigned, a geographic information system (GIS) was used to map sensitivity and constraint levels for each of the environmental resources inventoried within the study area. GIS was also used to create a composite constraints map for the study area, which served to identify potential overall levels of environmental constraint for the location of Project facilities.

Table 2-1. Environmental Sensitivity Summary

Data Layers	Sensitivity Level
Land Use	
Airports and Heliports (municipal and private runways less than 5,000 feet)	Exclusion
Federal Wilderness Area	Exclusion
National Parks and Monuments	Exclusion
BLM Right-of-Way Exclusion Area	Exclusion
Federal Wilderness Study Area	Exclusion
BLM Areas of Critical Environmental Concern	High
National or State Wildlife Refuge	High
National Conservation Area	High
BLM Right-of-Way Avoidance Area	High
State Park	High
Urban Areas (incorporated and unincorporated cities and towns)	Moderate
BLM Pending Solar Right-of-Way	Moderate
BLM Pending Wind Right-of-Way	Moderate
Research Natural Area	Moderate
Special Management Area	Moderate
Special Management Area (proposed)	Moderate
Vacant/Undeveloped	Low

Table 2-1. Environmental Sensitivity Summary	
Data Layers	**Sensitivity Level**
Visual and Recreation	
National Parks and Monuments	Exclusion
BLM VRM Objective Class I	Exclusion
BLM VRM Objective Class II	High
Scenic Trail (including National)	High
Scenic Roads or Byway	High
Concern Level Road I	High
BLM VRM Objective Class III	Moderate
USFS Visual Quality Objective Partial Retention	Moderate
Special Recreation Management Area	Moderate
Rest Area	Moderate
Concern Level Road II	Moderate
BLM VRM Objective Class IV	Low
USFS Visual Quality Objective Modification	Low
USFS Visual Quality Objective Maximum Modification	Low
Cultural Resources	
National Parks and Monuments	Exclusion
State Monument	High
National Register Site or District	High
Historic Trail (including National)	High
Cultural Resource Area (other sites)	Moderate
Biological Resources	
Designated Threatened and Endangered Species Critical Habitat	High
Wetlands	High
Desert Tortoise Habitat	–
BLM Category I	High
BLM Category II	Moderate
BLM Category III	Moderate
Sensitive Species	Moderate to High
General Native Vegetation	–
Arizona Upland Sonoran Desertscrub	Moderate
Coniferous and Mixed Woodland	Moderate
Desert Grassland (Ecotone)	Moderate
Great Basin Conifer Woodland	Moderate
Juniper Savanna (Ecotone)	Moderate
Madrean Evergreen Woodland	Moderate
Montane Coniferous Forest	Moderate
Petran Montane Conifer Forest	Moderate
Petran Subalpine Conifer Forest	Moderate
Plains and Great Basin Grassland	Moderate
Plains-Mesa Grassland	Moderate

Table 2-1. Environmental Sensitivity Summary	
Data Layers	**Sensitivity Level**
Semidesert Grassland	Moderate
Subalpine Coniferous Forest	Moderate
Chihuahuan Desertscrub	Low
Closed Basin Scrub	Low
Interior Chaparral	Low
Lava Beds	Low
Lower Colorado River Sonoran Desertscrub	Low
Montane Scrub	Low
Plains-Mesa Sand Scrub	Low
Urban, Farmland, or Open Water	Low

2.2.2.3 Identification of Alternative Routes and Substation Siting Areas

Once inventory data were compiled and the opportunities and constraints were clearly defined, the data were used to identify those areas that exhibited higher levels of opportunity combined with lower levels of constraint. In addition, a review of aerial imagery was combined with selected field reviews to make geographic adjustments to the routes within the general study corridors. The result was a set of refined alternative routes that were presented for review during the scoping process.

As part of this review, potential alternative transmission corridors and substation sites were grouped into smaller geographic areas to allow for localized comparisons among substation siting areas within the Project study area. The initial three areas included:

- Proposed SunZia East Substation (near Corona, New Mexico) to proposed Midpoint Substation (near Deming, New Mexico)
- Proposed Midpoint Substation[1] to proposed Willow-500 kV Substation (near Willcox, Arizona)
- Proposed Willow-500 kV Substation to permitted Pinal Central Substation

Alternatives within each of these routing areas were evaluated based on their ability to meet the Project objectives, taking into consideration both environmental and engineering factors. Environmental evaluation included the review of opportunities and constraints (sensitivities); and engineering evaluation included the consideration of engineering/construction constraints and reliability factors that were used to determine levels of potential risk. The characterizations of alternative routes vary on a case-by-case basis, depending on specific and local conditions, and on the potential to mitigate environmental and engineering concerns.

Through the scoping process, routes were further refined, deleted, and added based on the public's comments, cooperating agency input, and resource evaluations. A full discussion of the

[1] Midpoint Substation may also be referred to as SunZia South Substation.

scoping process can be found in the Project Scoping Report (BLM 2010a). Scoping meeting locations and dates are presented in Chapter 5, Section 5.2.2; a summary of the scoping process and its influence on the development of alternatives is provided in the following discussion.

Scoping Period 1

The BLM issued the NOI to prepare an EIS and possible RMP amendments for the Project in the *Federal Register*, Vol. 74, No. 102, dated May 29, 2009; initiating a 45-day public scoping period that was to end on July 13, 2009. In consideration of public input, the scoping period was extended to August 28, 2009, to allow additional time for comment.

During Scoping Period 1, several agency and public meetings were held to present the initial study area and routing suggestions. During this process, the BLM solicited agency and public input regarding the routes and study area.

Results of Scoping Period 1

Based on comments received by agencies and members of the public during Scoping Period 1, several modifications were made, including changes to the alignments of alternatives, the addition of new alternatives, and expansion of the study area (Figure 2-2).

Figure 2-2. Study Area Expansion

Numerous comments reflected concern regarding the location of the proposed route crossing the Rio Grande in the vicinity of the San Antonio community, north of the Bosque del Apache National Wildlife Refuge (NWR). In response to requests to avoid that location, two alternative transmission line routes were added for further study. Locations of alternative routes within the expanded study area were identified, based on an evaluation of environmental opportunities and constraints and engineering criteria, as follows:

- Route along the western boundary and in the northwest corner of the WSMR
- Routes along the eastern boundary of the WSMR in Otero and Lincoln counties, through Fort Bliss on the east and west sides of US Highway 54 in Otero County, and south of the WSMR in Doña Ana County

Scoping Period 2

Because of the modifications to the routes and expansion of the study area, a second scoping period was conducted. The BLM issued a news release on October 7, 2009, to announce the expanded study area and additional scoping meetings.

Results of Scoping Period 2

During Scoping Period 2, meetings with the military and agencies resulted in the addition of routing groups north of the WSMR, and alternative routes through Tucson, Arizona; while other links were recommended for deletion.

Routes were added in the following locations:

- Farther east from the WSMR and Holloman AFB, near Tularosa
- In Lincoln, Torrance, and Valencia counties, to avoid impacts to military training and testing operations
- West of the San Pedro River
- East of the San Pedro River, avoiding Nature Conservancy Lands and the Muleshoe Ranch Cooperative Management Area (CMA), and Swamp Springs-Hot Springs Watershed and Muleshoe Riparian areas of critical environmental concern (ACEC)
- Following Interstate 10 (I-10) through Tucson
- Following railroad alignment through Tucson
- Following I-10 and continuing west of Tucson
- Following drainage corridors (rivers and washes) through Pima County

Scoping Period 3

In response to scoping comments received during the two previous scoping periods, the preliminary study undertaken, and consultations with interested parties, the BLM expanded the Project study area to consider additional potential alternative transmission line routes in New Mexico and Arizona. Consequently, a third scoping period was conducted from March 31 to June 10, 2010. A news release dated March 31, 2010 announced the expanded study area and dates and locations of additional scoping meetings.

Additional routing options that were reviewed during this period included the following:

New Mexico – Alternative routes within Lincoln, Torrance, Valencia, and Socorro counties, north of Socorro, New Mexico, were suggested as options to the initially proposed and alternative routes north of the WSMR in the vicinity of US Route 380. The additional alternative routes were suggested to avoid impacts to military training and testing operations based at the WSMR; Holloman, Kirtland, and Cannon AFBs; and Fort Bliss. Some of these routes were later eliminated after further review (see Section 2.3.3.1).

Arizona – In addition to the initially proposed route and alternative routes that were presented during previous scoping, alternative routes within Pima County, in the Tucson area and west of the San Pedro River, were identified. Scoping comments included support for locating the proposed Project within the I-10 highway corridor and existing utility corridors. Other comments reflected concern for potential environmental impacts to grazing/ranching operations and private lands/property values; biological resources (especially waterfowl/migratory birds, special-status species, and wildlife corridors); cultural and visual resources; local economics; and unauthorized off-road traffic on the proposed access roads.

Results of Scoping Period 3

Following Scoping Period 3, a detailed engineering review was conducted to refine routing options and links. Based on this engineering review, public comments, and ongoing environmental studies, a final set of alternative routing options were identified to be carried forward for analysis in the EIS process.

2.3 ALTERNATIVES

The NEPA requires the consideration and evaluation of a range of reasonable alternatives, or alternatives that provide different ways of meeting the agency's purpose and need. Reasonable alternatives are defined as those that are practicable and feasible from a technical and economic standpoint. An EIS must also provide a description of alternatives eliminated from further analysis, along with the rationale for elimination (40 CFR 1502.14[a]). In addition, CEQ regulations direct that an EIS include a description of the No Action alternative (40 CFR 1502.14[d]). The No Action alternative is the only one that does not respond to the purpose and need for the action and that must be analyzed in an EIS. CEQ regulations direct that an EIS "…include reasonable alternatives not within the jurisdiction of the lead agency" (40 CFR 1502.14[c]).

Analyzing feasible alternatives provides decision makers with a clear basis for choice, by showing consideration of different and reasonable paths for accomplishing the same purpose and need for a proposed project. This section includes the description of the alternatives considered for this Project, including the No Action alternative, and the alternatives that were considered but eliminated from detailed study in this EIS.

2.3.1 No Action Alternative

NEPA requires that an EIS include the analysis of a No Action alternative, to provide a baseline for comparison of environmental effects that could occur with implementation of action alternatives, and to demonstrate potential consequences of not meeting the purpose and need of a proposed action.

Under the No Action alternative, the BLM would not grant right-of-way for construction and operation of the proposed Project and it would not amend any planning decisions. The Project facilities, including transmission lines and substations, would not be built and existing land uses and present activities in the Project study area would continue. The No Action alternative does not consider the potential for additional actions that could occur contingent on the denial of the proposed action or alternatives. Service by the existing transmission system within the study area would continue, including those proposed generation projects with existing, documented interconnection requests (Chapter 1, Table 1-2).

2.3.2 Alternative Transmission Line Routes

The proposed Project would include two new, single-circuit 500 kV transmission lines located within a right-of-way up to 1,000 feet wide. The approximately 500-mile-long transmission line route would originate at a new substation (proposed SunZia East) in Lincoln County, New Mexico, and terminate at the permitted Pinal Central Substation in Pinal County, Arizona. Project alternatives were divided into four route groups (three groups remain), based on geography and interconnection points (substations), as shown on Figure 2-3.

- Route Group 1: SunZia East Substation to Midpoint Substation
- Route Group 2 (eliminated): SunZia East Substation to Midpoint Substation – East of White Sands and through Fort Bliss
- Route Group 3: Midpoint Substation to Willow-500 kV Substation
- Route Group 4: Willow-500 kV Substation to Pinal Central Substation

Each route group is composed of individual subroutes, which are formed by a series of interconnecting segments or links. Local alternatives have also been identified within each subroute to provide additional route options, while identified crossover links provide the opportunity to transition between subroutes. Subroutes, as well as local alternatives and crossover links, are listed in Table 2-2 and are illustrated on Figure 2-4 through Figure 2-6. These routes represent the most reasonable and feasible alternatives, as determined through the environmental study process described in Section 2.2. A description of each alternative subroute accompanies its corresponding figure. Following additional study and communications with the DOD, alternatives comprising Route Group 2 – East of White Sands, as well as Subroute 1C, were eliminated from consideration for the Project, as described in Section 2.3.3.

Table 2-2. Subroutes by Link		
Subroute Route	**Length (miles[1])**	**Links** ***Bold links*** *are unique to each subroute; unbold links are duplicated across subroutes*
Route Group 1: SunZia East Substation to Midpoint Substation		
Subroute 1A – North River Crossing		
Subroute 1A	219.5	A10-A21-A22-E80c-E80d-E101a-E101b-E133-E180-E200-E211-A161-A161a-A270-A330a-A330b-A400-A440-A530-A520
Subroute 1A1	228.8	A10-A21-E82-E84a-**E84b**-**E85**-E80d-E101a-E101b-E133-E180-E200-E211-A161-A161a-**A260**-A330a-A330b-A400-A440-A530-A520
Subroute 1A2 – BLM Preferred Alternative	230.3	A10-A21-E82-E84a-**E86a-E86b**-E101b-E133-E180-E200-E211-A161-A161a-A260-A330a-A330b-A400-A440-A530-A520
Subroute 1B – San Antonio Crossing		
Subroute 1B1	223.6	A10-A21-A22-E80c-E80d-**E90-A90-A111-A112-A140-A143-A160**-A161-A161a-A270-A330a-A330b-A400-A440-A530-A520
Subroute 1B2	209.2	A10-**A30-A50-A60**-A90-A111-A112-A140-A143-A160-A161-A161a-A270-A330a-A330b-A400-A440-A530-A520
Subroute 1B2a	212.8	A10-A30-A50-A60-A90-A111-A112-A140-A143-A160-A161-A161a-A260-A330a-A330b-A400-A440-A530-A520
Subroute 1B3	206.3	A10-A30-**A40-A41-A80**-A111-A112-A140-A143-A160-A161-A161a-**A270**-A330a-A330b-A400-A440-A530-A520
Local Alternative and Crossover Links for Route Group 1		
Local Alternative Links for 1A, 1A1	—	E81, E83, E82-E84a-E84b-E85
Local Alternative Links for 1A, 1A1, 1B1, 1B2, 1B3	—	A161b, A260, A361-A430-A481
Crossover Links 1B2, 1B3	—	A70
Route Group 3: Midpoint Substation to Willow-500 kV Substation		
Subroute 3A – North	123.4	B60-B90-B120a-B120b-B121-B160a-**B160b**-B160c-B170
Subroute 3A2 – BLM Preferred Alternative	123.9	B60-B90-B120a-B120b-B121-B160a-**B160d**-B160c-B170
Subroute 3B – South	128.6	B60-**B80-B110a-B110b-B112-B150a-B150b-B151**-B170
Local Alternative and Crossover Links for Route Group 3		
Crossover Links 3A, 3B	—	B111, B140
Route Group 4: Willow-500 kV Substation to Pinal Central Substation		
Subroute 4A – North of Mt. Graham	132.9	B153a-B153b-C170-C178-C173-C592-C595-C620-C760-C780-C830-C840-C850-C880-C880a
Subroute 4B – Sulphur Springs Valley	133.0	**C71-C72-C90-C130a-C130b**-C170-C178-C173-C592-C595-C620-C760-C780-C830-C840-C850-C880-C880a

Table 2-2. Subroutes by Link		
Subroute Route	**Length (miles[1])**	**Links** ***Bold links*** *are unique to each subroute;* *unbold links are duplicated across subroutes*
Subroute 4C – San Pedro Valley and Tucson		
Subroute 4C1 – East of San Pedro River	139.0	C71-C71a-C110-C212-C111-C270-C301-C331-C361-C470-C510-C660-C661-C670-C690-C691-C693-C760-C780-C830-C840-C850-C880-C880a
Subroute 4C2 – West of San Pedro River	151.8	C71-C71a-C110-C212-C111-C270-**C271-C266-C276-C441-C450**-C661-C670-C680-C818-C820-C830-C840-C850-C880-C880a
Subroute 4C2a – West of San Pedro River	137.8	C71-C71a-C110-C212-C111-C270-C271-C266-C276-C441-C450-C661-C670-**C690-C691-C693-C760-C780**-C830-C840-C850-C880-C880a
Subroute 4C2b – West of San Pedro River	147.2	C71-C71a-C110-C212-C260-C261-C201-C441-C450-C661-C670-C690-C691-C693-C760-C780-C830-C840-C850-C880-C880a
Subroute 4C2c – West of San Pedro River – BLM Preferred Alternative	161.2	C71-C71a-C110-C212-C260-C261-C201-C441-C450-C661-C670-C680-C818-C820-C830-C840-C850-C880-C880a
Subroute 4C3 – Tucson	172.9	C71-C71a-C110-C212-C260-C261-**F40a-F600-F60b-F82-F80-F111-F112-F510-F540-C810A-C810-C813-C816-C817**-C820-C830-C840-C850-C880-C880a
Local Alternative and Crossover Links for Route Group 4		
Local Alternative Link for 4A, 4B, 4C1	—	C790
Local Alternative Links for 4A, 4B, 4C1, 4C2, 4C3 (Pinal Central Substation)	—	C860, C870, C890
Local Alternative Link for 4C1	—	C692
Local Alternative Links for 4C2 – Winchester Substation	—	C260-C261-C201
Local Alternative Links for 4C2 –Tortolita Substation	—	C680, C815, C814, C816, C812, C813, C810, C810a, C817
Local Alternative Links for 4C3 (Pantano/Rillito)	—	F40b-F51-F60a, F81a-F81b
Local Alternative Links for 4C3 (Tortolita Substation)	—	F40b-F51-F60a, F81a-F81b, C812
Local Alternative Links for 4C1, 4C2, 4C3	—	C72-C90-C121-C211
Crossover Links for 4A, 4B, 4C1	—	C500, C501, C502, C174
Crossover Links for 4A, 4B, 4C1, 4C2	—	C671

[1] All mileages in the route descriptions are approximate.

This page intentionally left blank.

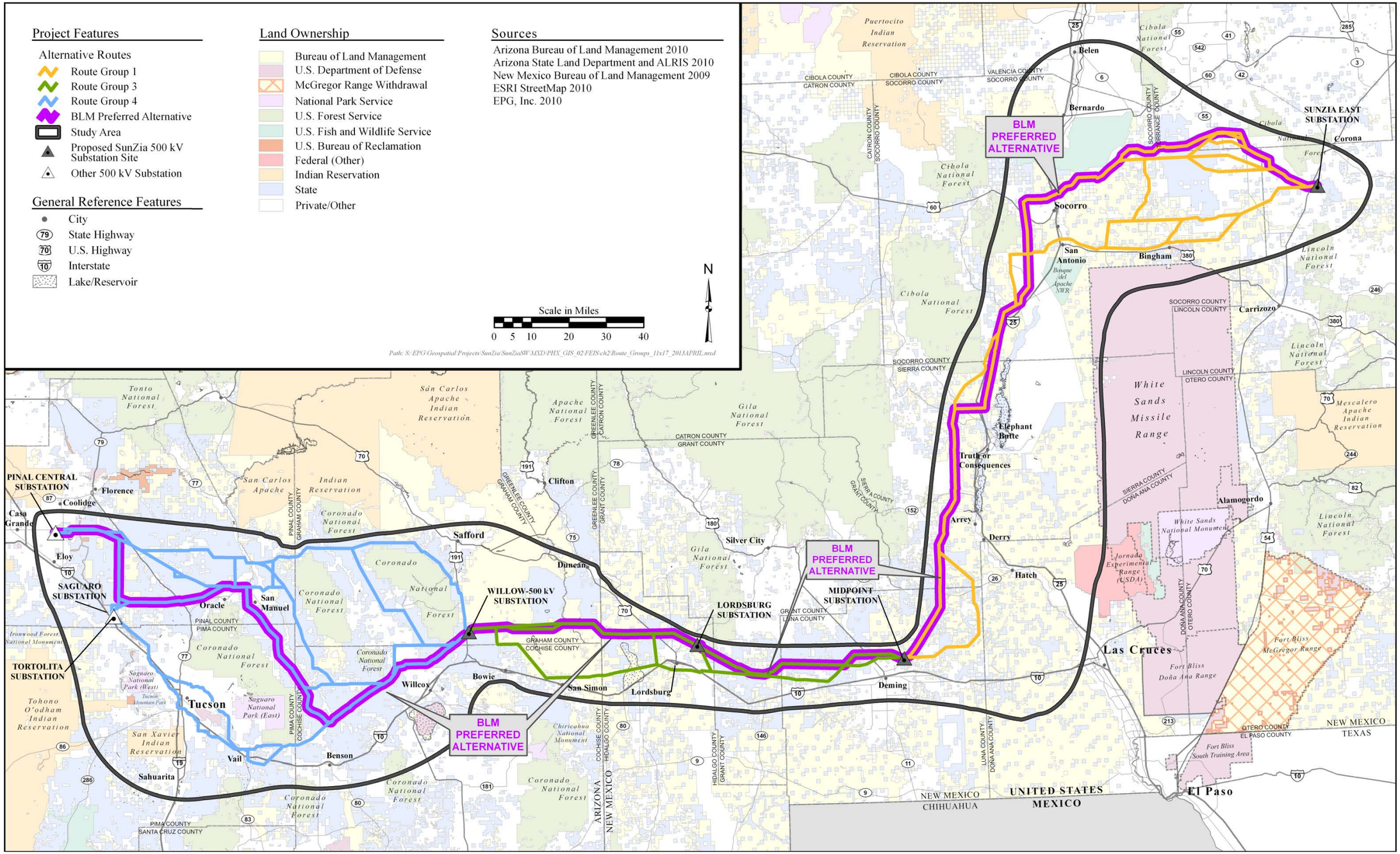

Figure 2-3. Alternative Routes

This page intentionally left blank.

ROUTE GROUP 1:

SunZia East Substation to Midpoint Substation

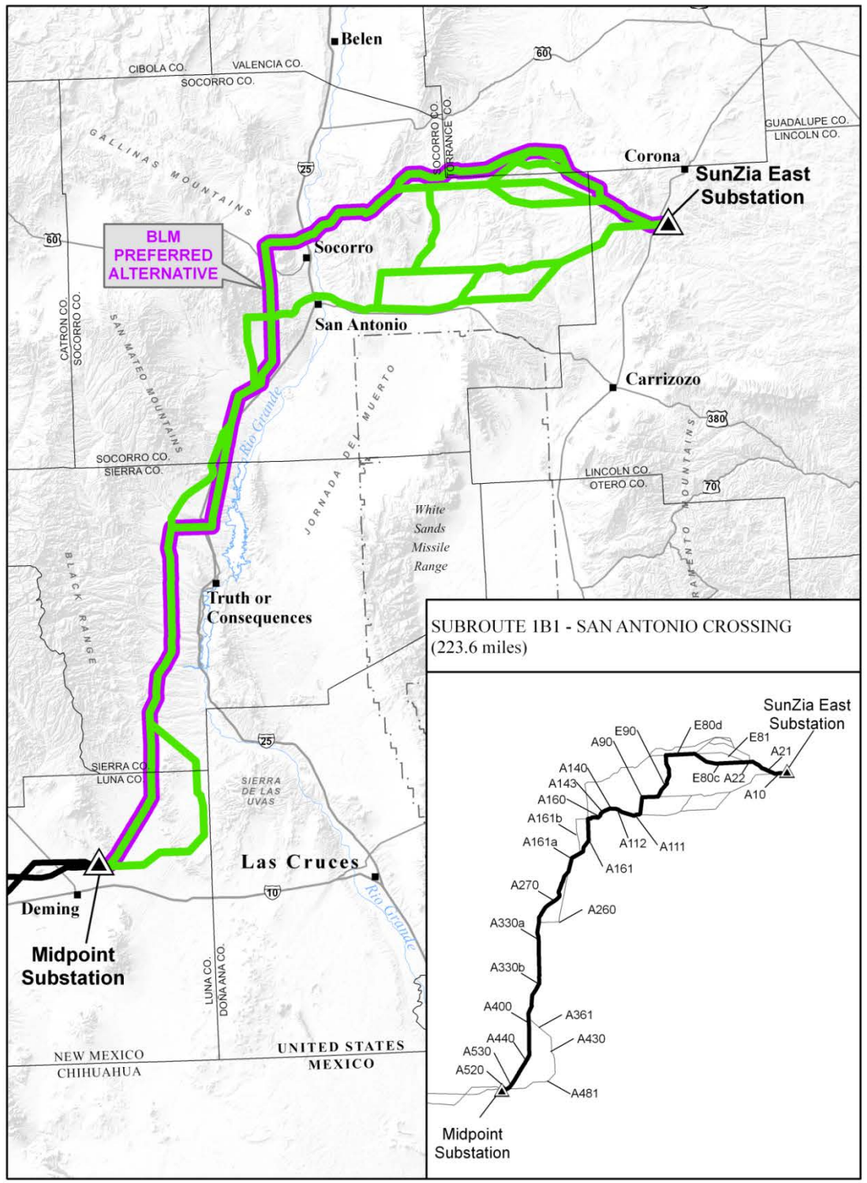

SUBROUTE 1A - NORTH RIVER CROSSING (219.5 miles)

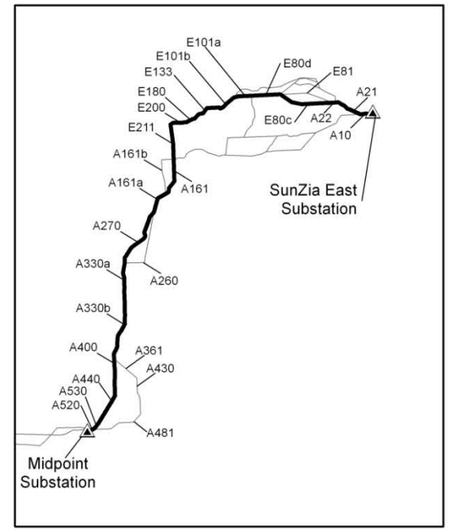

SUBROUTE 1A1 - NORTH RIVER CROSSING (228.8 miles)

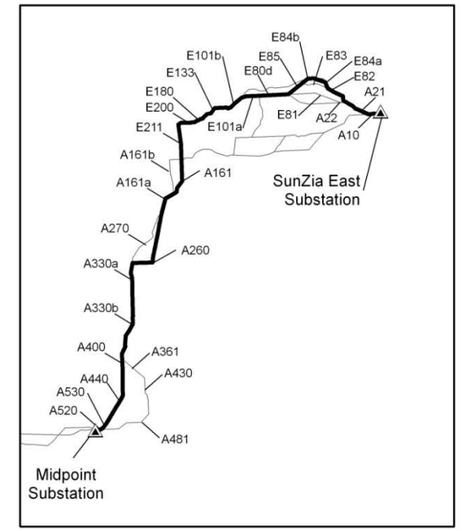

BLM PREFERRED ALTERNATIVE

SUBROUTE 1A2 - NORTH RIVER CROSSING (NORTHERN) - (230.3 miles)

A10, A21, E82, E84a, E86a, E86b, E101b, E133, E180, E200, E211, A161, A161a, A260, A330a, A330b, A400, A440, A530, A520

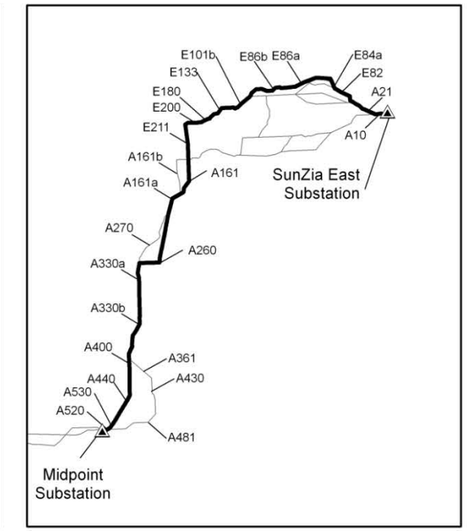

SUBROUTE 1B1 - SAN ANTONIO CROSSING (223.6 miles)

SUBROUTE 1B2 - SAN ANTONIO CROSSING (209.2 miles)

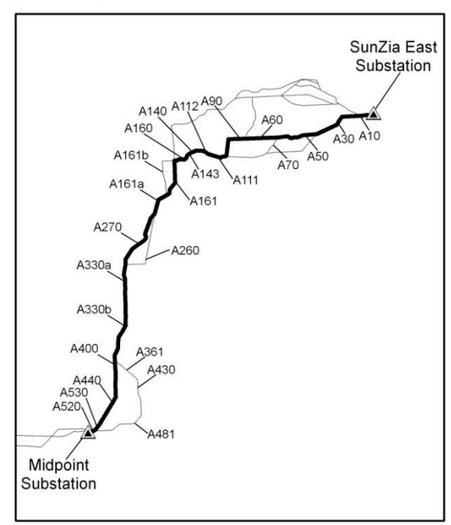

SUBROUTE 1B2a - SAN ANTONIO CROSSING (212.8 miles)

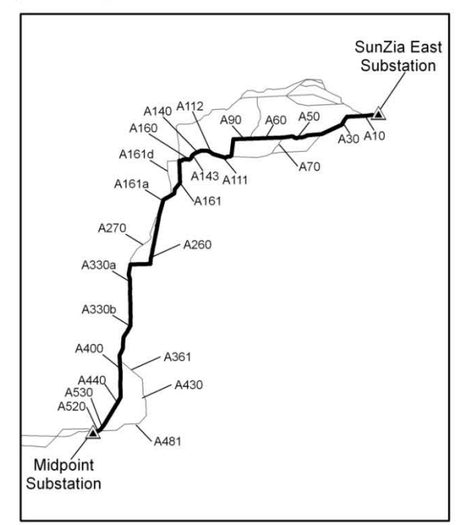

SUBROUTE 1B3 - SAN ANTONIO CROSSING (206.3 miles)

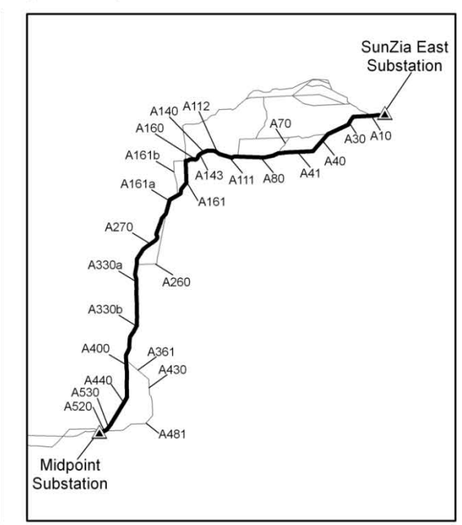

Figure 2-4. Route Group 1: SunZia East Substation to Midpoint Substation

This page intentionally left blank.

ROUTE GROUP 3: Midpoint Substation to Willow-500 kV Substation

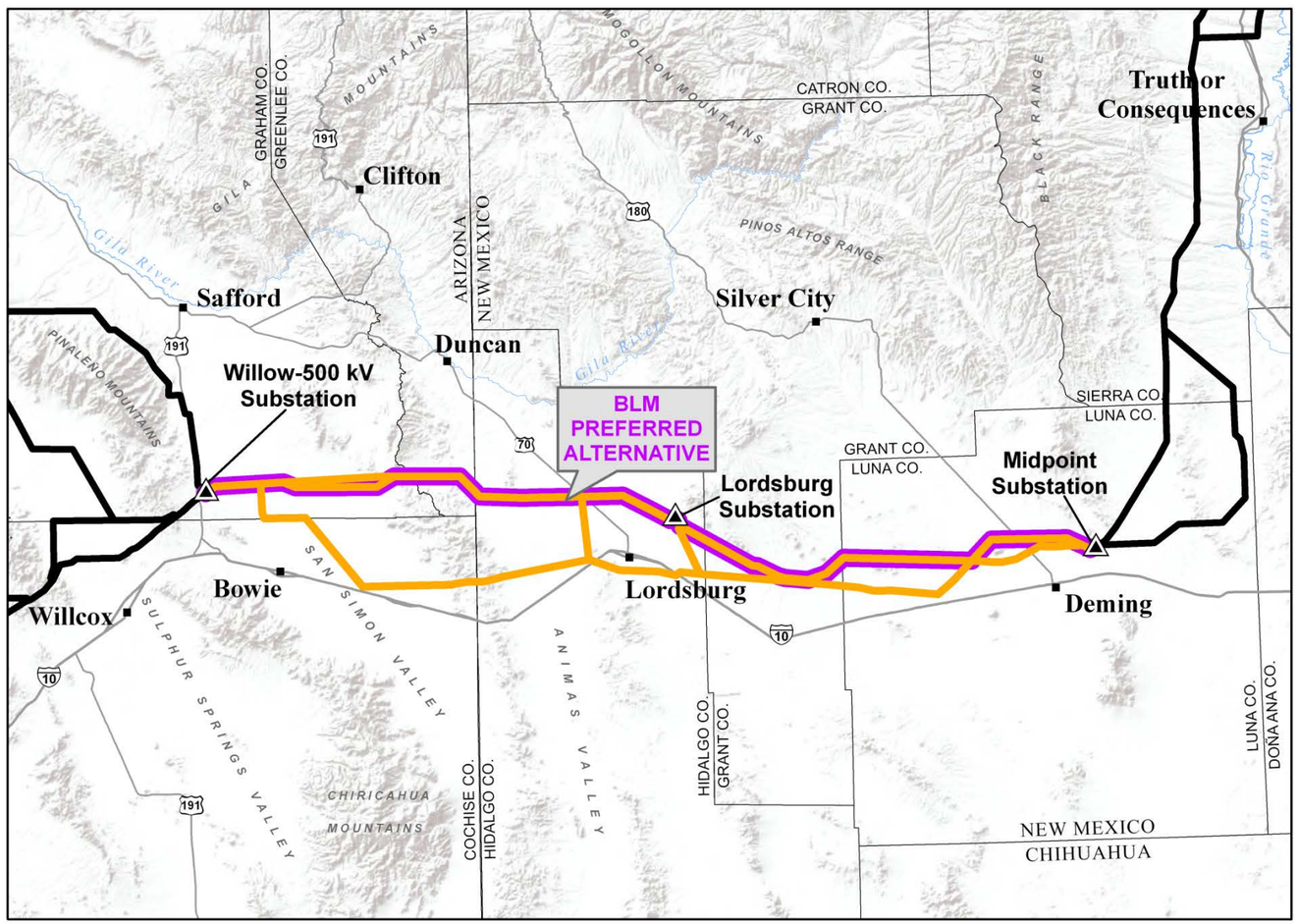

SUBROUTE 3A - NORTH (123.4 miles)

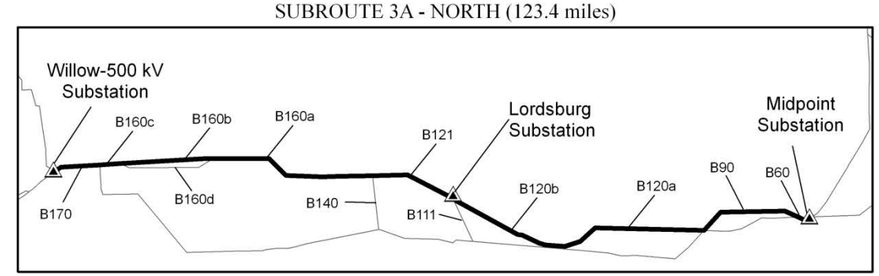

BLM PREFERRED ALTERNATIVE

SUBROUTE 3A2 - (123.9 miles)

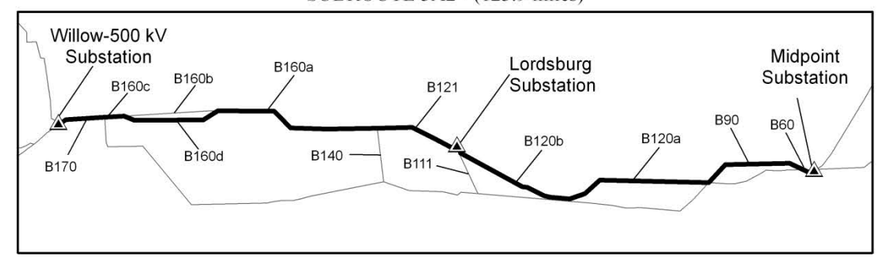

SUBROUTE 3B - SOUTH (128.6 miles)

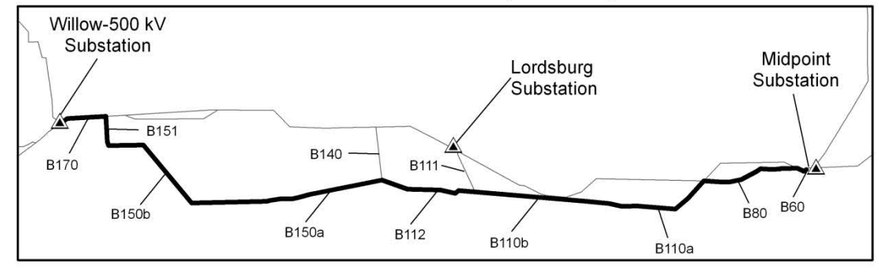

Figure 2-5. Route Group 3: Midpoint Substation to Willow-500 kV Substation

This page intentionally left blank.

ROUTE GROUP 4: Willow-500 kV Substation to Pinal Central Substation

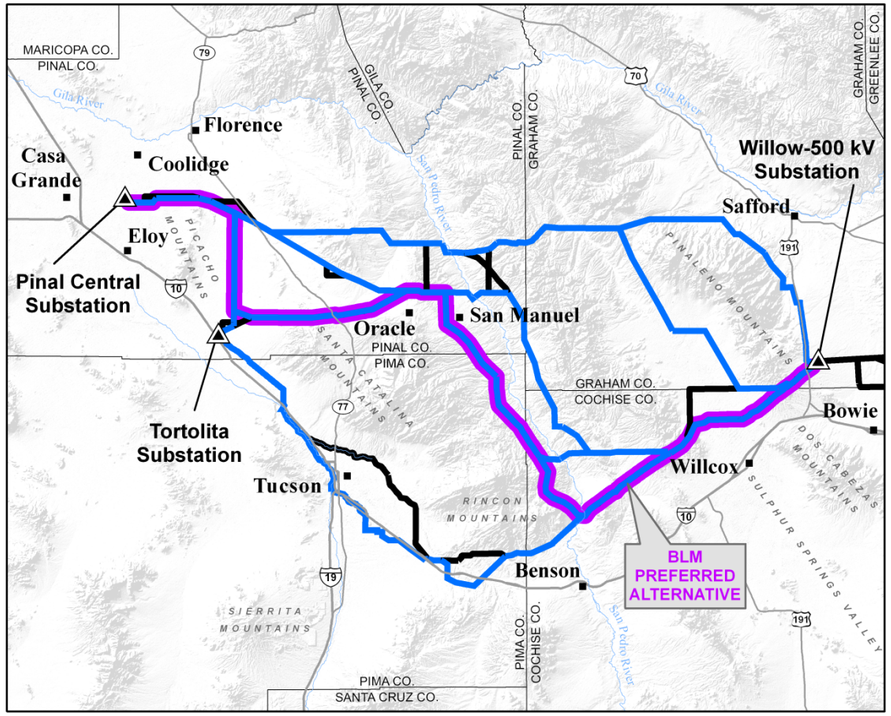

SUBROUTE 4A - NORTH OF MT. GRAHAM
(132.9 miles)

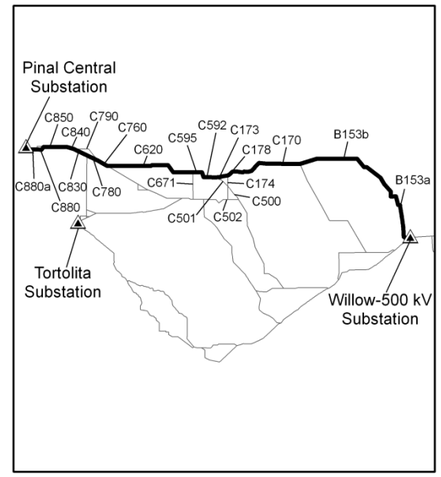

SUBROUTE 4B - SULPHUR SPRINGS VALLEY
(133.0 miles)

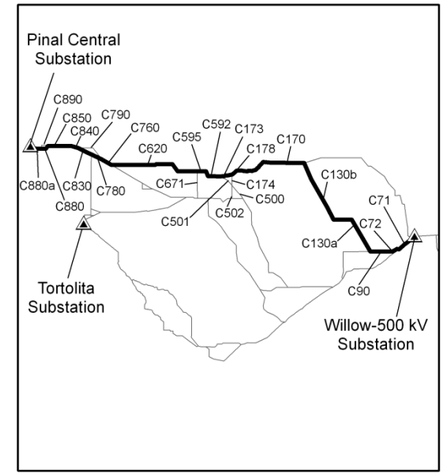

SUBROUTE 4C1 - EAST OF SAN PEDRO VALLEY
(139.0 miles)

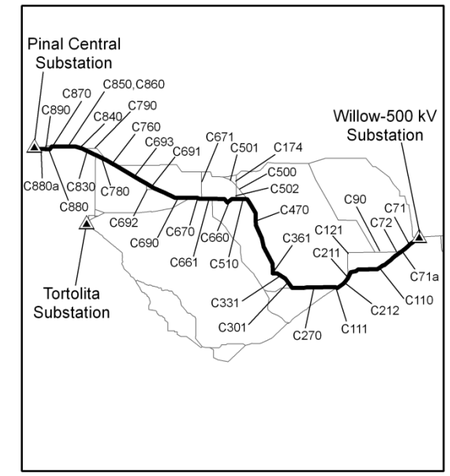

BLM PREFERRED ALTERNATIVE

SUBROUTE 4C2 - WEST OF SAN PEDRO VALLEY
(151.8 miles)

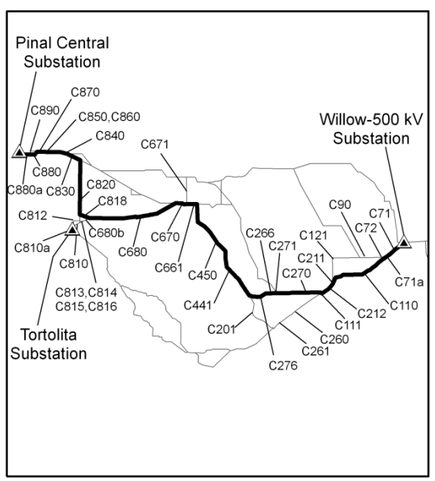

SUBROUTE 4C2a - WEST OF SAN PEDRO VALLEY
(137.8 miles)

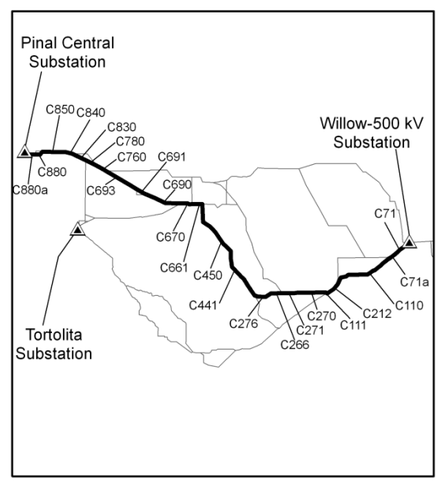

SUBROUTE 4C2b - WEST OF SAN PEDRO VALLEY
(147.2 miles)

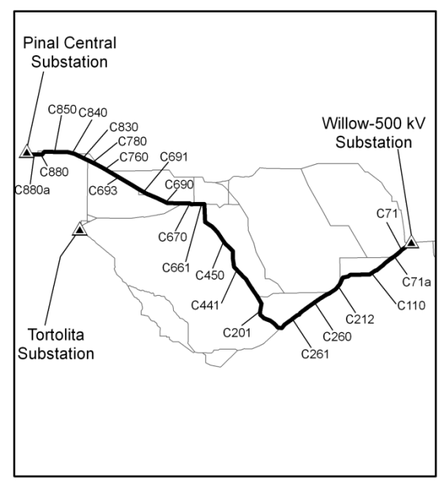

SUBROUTE 4C2c - WEST OF SAN PEDRO VALLEY
(161.2 miles)

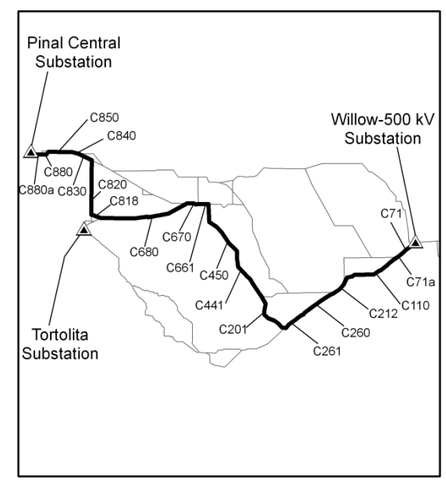

SUBROUTE 4C3 - TUCSON
(172.9 miles)

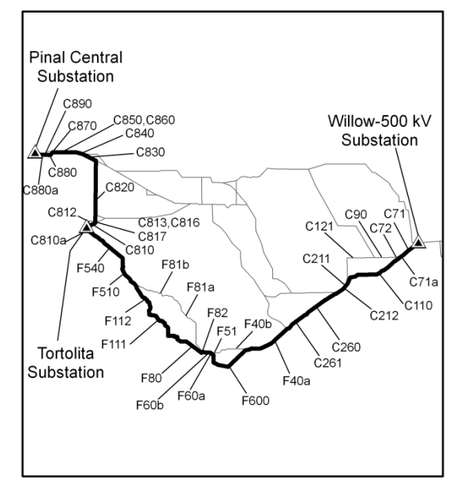

Figure 2-6. Route Group 4: Willow-500 kV Substation to Pinal Central Substation

This page intentionally left blank.

2.3.2.1 Route Group 1: SunZia East Substation to Midpoint Substation

Subroute 1A – North River Crossing

Subroute 1A (219.5 miles) proceeds west from the proposed SunZia East Substation, passes adjacent to the Sevilleta NWR, and crosses the Rio Grande 4 miles north of the community of Socorro. The subroute continues west before it turns south for 23 miles, parallel to a 345 kV transmission line. Subroute 1A turns southwest, with a portion of the subroute parallel to I-25 and a 115 kV transmission line, before it crosses over State Highway 107 to parallel State Route (SR) 1. The subroute continues in a southerly direction parallel to a 345 kV transmission line, with a portion of the subroute also parallel to SR 27 and SR 26. Subroute 1A parallels approximately 113.5 miles of existing or designated utility corridors.

Subroute 1A1 – North River Crossing

Subroute 1A1 (228.8 miles) proceeds west from the proposed SunZia East Substation, then continues north into Torrance County approximately 4 miles north of the Gran Quivira (links E82, E84, and E85), and rejoins Subroute 1A in Socorro County, east of the Sevilleta NWR. Subroute 1A1 follows the remaining alignment of Subroute 1A, except for the portion located west of the Rio Grande, crossing from Socorro County into Sierra County; that portion follows Link A260 within an existing transmission line corridor for approximately 25 miles. Subroute 1A1 parallels approximately 140.7 miles of existing or designated utility corridors.

Subroute 1A2 – BLM Preferred Alternative

Subroute 1A2 (230.3 miles), the BLM preferred alternative, proceeds west from the proposed SunZia East Substation, then continues north into Torrance County approximately 4 miles north of the Gran Quivira (links E82, E84a, and E86a). As Subroute 1A2 proceeds west, it parallels Subroute 1A1 between 2 and 3 miles to the north, then rejoins Subroute 1A in Socorro County, east of the Sevilleta NWR. As with Subroute 1A1, Subroute 1A2 follows the remaining alignment of Subroute 1A as described above. Subroute 1A2 parallels approximately 140.7 miles of existing or designated utility corridors. Subroute 1A1 was identified in the Draft EIS as the BLM preferred alternative. The selection of Subroute 1A2 as the BLM preferred alternative in this Final EIS was made in response to comments on the Draft EIS that requested modifications to segments E80d and E101a in order to increase the distance between the transmission lines and the military missile launch complex 94 (LC 94). Aligning the transmission lines along Subroute 1A2 places project facilities approximately 4 miles north of LC 94 and farther from the projected debris field of LC 94. Subroute 1A2 was also modified in response to comments on the Draft EIS regarding views from Gran Quivira.

Subroute 1B1, 1B2, 1B2a, and 1B3 – San Antonio Crossing

Subroute 1B1 (223.6 miles) proceeds west from the proposed SunZia East Substation, then turns south approximately 5 miles east of the Sevilleta NWR. The subroute continues south, then turns and again heads west, crosses the Rio Grande, and continues approximately 1.5 miles north of the community of San Antonio roughly parallel to US Route 380 before it again turns south, approximately 8 miles south of the city of Socorro. As Subroute 1B1 proceeds south, it passes

west of Elephant Butte Reservoir and 8 miles west of the city of Truth or Consequences, with a majority of this segment parallel to I-25. The subroute turns slightly to the southwest and proceeds to the proposed Midpoint Substation northeast of Deming. Subroute 1B1 parallels approximately 98.6 miles of existing and designated utility corridors, as well as a large portion of I-25 and US Route 380.

Subroute 1B2 (209.2 miles) proceeds west, similar to subroutes 1A and 1B1, then turns slightly southwest and continues west, parallel to US Route 380 (12 miles north of the WSMR). Subroute 1B2 then turns south and continues west again, from which point it follows the same path as Subroute 1B1. The subroute heads south again, parallel to I-25, then turns slightly southwest and proceeds to the proposed Midpoint Substation. Subroute 1B2 parallels approximately 89.6 miles of existing and designated utility corridors, as well as a large portion of I-25 and US Route 380.

Subroute 1B2a (212.8 miles) is similar to Subroute 1B2, with the exception of Link A260 in place of Link A270. Link A260 follows an existing transmission line east of I-10 in Sierra County and crosses back west of I-10, north of Truth or Consequences, to reconnect with Subroute 1B2. Subroute 1B2a parallels approximately 99.5 miles of existing and designated utility corridors, as well as a large portion of I-25 and US Route 380.

Subroute 1B3 (206.3 miles) proceeds west, similar to Subroute 1B2. It passes approximately 5 miles north of the WSMR, parallel to US Route 380. From here, Subroute 1B3 follows the same path as 1B2, continues west, and crosses the Rio Grande. Subroute 1B3 passes approximately 1.5 miles north of the community of San Antonio and continues parallel to US Route 380 before it proceeds south, parallel to I-25, then turns southwest and proceeds to the proposed Midpoint Substation. Subroute 1B3 parallels approximately 88.6 miles of existing and designated utility corridors, as well as a large portion of I-25 and US Route 380.

2.3.2.2 Route Group 3: Midpoint Substation to Willow-500 kV Substation

Subroute 3A – North

Subroute 3A (123.4 miles) proceeds west from the proposed Midpoint Substation along the Subroute 3A2 alignment to approximately 10 miles west of the New Mexico-Arizona state line. The subroute proceeds west and crosses the southern tip of the Hot Well Dunes Recreation Area approximately 3 miles north of the San Simon Creek Basin, then proceeds west into the proposed Willow-500 kV Substation. Subroute 3A parallels approximately 42.4 miles of existing or designated utility corridors.

Subroute 3A2 – BLM Preferred Alternative

Subroute 3A2 (123.9 miles), the BLM preferred alternative, is a variation of Subroute 3A. The subroute proceeds west from the proposed Midpoint Substation, and then crosses a 115 kV transmission line and US Route 180 approximately 7.5 miles north of Deming. From that point, Subroute 3A2 proceeds southwesterly, and then turns northwest to parallel a 345 kV transmission line and pipeline adjacent to the Hidalgo Substation. The subroute then heads west, to cross the New Mexico-Arizona state line from Hidalgo County into Greenlee County. The subroute then proceeds west into Graham County, and south of the Hot Well Dunes Recreation

Area, and continues through the San Simon Valley to the proposed Willow-500 kV Substation. Subroute 3A2 parallels approximately 42.4 miles of existing or designated utility corridors.

The BLM preferred alternative described in the Draft EIS was the combination of subroutes 3A and 3B, which included Crossover Link B140 (Subroute 3A1). The selection of Subroute 3A2 was made in response to comments received on the Draft EIS to include a modification of the alignment of Link B160 (a portion of Subroute 3A), to avoid the Hot Well Dunes Recreation Area.

Subroute 3B – South

Subroute 3B (128.6 miles) proceeds in a westerly direction and crosses a 115 kV transmission line and US Route 180, approximately 5 miles north of Deming. The subroute continues west, turns southwest, continues west again and crosses a 115 kV transmission line and several pipelines. Subroute 3B parallels a 345 kV transmission line for approximately half of this portion of the subroute. It then heads southwest and crosses I-10, the Union Pacific Railroad (UPRR), and two pipelines approximately 2 miles north of the community of Lordsburg before it crosses back to the north side of I-10 and proceeds northwest parallel to several pipelines. Subroute 3B then heads west and continues to parallel several pipelines, then turns north adjacent to the UPRR, then heads west again as it proceeds to the proposed Willow-500 kV Substation. Subroute 3B parallels approximately 76.2 miles of existing or designated utility corridors.

2.3.2.3 Route Group 4: Willow-500 kV Substation to Pinal Central Substation

Subroute 4A – North of Mt. Graham

Subroute 4A (132.9 miles) proceeds north from the proposed Willow-500 kV Substation, parallel to a 230 kV transmission line, pipeline, and US Route 191, then heads west to a point just outside the eastern boundary of the Coronado National Forest (CNF). Subroute 4A then heads northwest to a point just outside the northeast corner of the CNF (approximately 7.5 miles from the community of Safford), turns west then slightly southwest (approximately 2 miles north of the northern boundary of the CNF), to a point approximately 2 miles north of Mammoth. It crosses the San Pedro River, a 115 kV transmission line, and a pipeline along this segment. The subroute heads north parallel to the San Pedro River, then west where it crosses two pipelines, is parallel to one pipeline, and crosses SR 79 and a 115 kV transmission line adjacent to SR 79. The subroute continues west and crosses the CAP and SR 87 before it proceeds to the permitted Pinal Central Substation. Subroute 4A parallels approximately 27.6 miles existing or designated utility corridors.

Subroute 4B – Sulphur Springs Valley

Subroute 4B (133.0 miles) proceeds southwest from the proposed Willow-500 kV Substation, parallel to two 345 kV transmission lines, and crosses two pipelines and US Route 191. The subroute proceeds southwest then west, and crosses two 345 kV transmission lines before it heads northwest to follow the western portion of the CNF. The subroute turns west before it turns slightly southwest (approximately 2 miles north of the northern boundary of the CNF), to a point approximately 2 miles north of Mammoth. It crosses the San Pedro River, a 115 kV

transmission line, and a pipeline along this segment, following the same path as Subroute 4A. Subroute 4B parallels approximately 21.6 miles of existing or designated utility corridors.

Subroute 4C1 – East of San Pedro River

Subroute 4C1 (139.0 miles) proceeds southwest from the proposed Willow-500 kV Substation, parallel to two 345 kV transmission lines, and crosses two pipelines and US Route 191. The subroute proceeds west/southwest, parallel to two 345 kV transmission lines, before it continues west and crosses over two 345 kV transmission lines. Subroute 4C1 then turns northwest, enters the Muleshoe Ecosystem CMA, turns west along the southern boundary of the CMA, and then heads northwest and crosses two pipelines west of the CMA and CNF, roughly parallel to the San Pedro River (approximately 7 miles east of the community of San Manuel). Subroute 4C1 heads west and crosses the San Pedro River (approximately 4.5 miles south of Mammoth and 4 miles north of San Manuel), where it crosses SR 77 then heads northwest parallel to a pipeline, and crosses SR 79 and a 115 kV transmission line. As the subroute then heads west, it crosses the CAP and SR 87 before it proceeds to the permitted Pinal Central Substation. Subroute 4C1 parallels approximately 63.9 miles of existing or designated utility corridors.

Subroute 4C2 – West of San Pedro River

Subroute 4C2 (151.8 miles) proceeds southwest from the proposed Willow-500 kV Substation, parallel to two 345 kV transmission lines, and crosses two pipelines and US Route 191. The subroute heads west, parallel to two 345 kV transmission lines, then southwest. The subroute crosses the 345 kV lines approximately 0.7 mile west of the San Pedro River and turns northwest, then north (approximately 2 miles west of San Manuel). Subroute 4C2 then heads west, crosses SR 77 (approximately 2 miles north of the community of Oracle), and parallels a 115 kV transmission line to the southwest, to a point adjacent to the Oracle Junction Substation. Subroute 4C2 then proceeds parallel to a 500 kV and a 115 kV transmission line, and crosses SR 79. The subroute proceeds northwest then north, to follow the same path as Subroute 4C1 into the permitted Pinal Central Substation. Subroute 4C2 parallels approximately 73.1 miles of existing or designated utility corridors.

Subroute 4C2a (137.8 miles) is similar to 4C2, with the exception of the segment between Oracle and the Pinal Central Substation (C690, C691, C693, C760, and C780), which follows an existing pipeline corridor for approximately 30 miles in Pinal County.

Subroute 4C2b (147.2 miles) is similar to 4C2a, with the exception of the segment between a point north of Willcox and the San Pedro River, where Subroute 4C2b continues parallel to the existing 345 kV transmission lines for approximately 20 miles, and crosses the San Pedro River south of the Three Links Ranch in Cochise County (links C260, C261, and C201). The subroute continues northwesterly through the northeast corner of Pima County into the Oracle area of Pinal County, west of the San Pedro River.

Subroute 4C2c – BLM Preferred Alternative

Subroute 4C2c (161.2 miles), the BLM preferred alternative, is a combination of 4C2 and 4C2b. The subroute follows the existing 345 kV transmission lines from the Willow-500 kV Substation across the San Pedro River, and continues northwesterly through the northeast corner of Pima

County into Pinal County, following the Subroute 4C2b alignment. It then follows the westerly route toward the Tortolita Substation (Subroute 4C2, Link C680), and from that point follows links C818 and C820 approximately 15 miles north to rejoin the 4C2 routes. The preferred alignment along Link C820 would be parallel to and east of the proposed Pinal Central to Tortolita 500 kV transmission line within right-of-way on BLM land for approximately 10.8 miles. Subroute 4C2c parallels approximately 90.4 miles of existing or designated utility corridors.

Subroute 4C3 – Tucson

Subroute 4C3 (172.9 miles) follows the same path as Subroute 4C2 from the Willow-500 kV Substation to a point west of Cascabel Road, then continues southwest parallel to two 345 kV transmission lines, and crosses a pipeline and a 115 kV transmission line (approximately 8 miles northwest of the community of Benson) before it continues southwest to cross three pipelines and I-10. The subroute then heads west (approximately 4 miles south of Saguaro National Park) before it turns north approximately 2 miles east of the community of Vail. As Subroute 4C3 turns west again, to a point adjacent to the intersection of I-10 and Colossal Cave Road, it crosses I-10 and proceeds northwest parallel to the interstate. Subroute 4C3 again heads west before it parallels a pipeline, turns north, proceeds west, crosses Wilmot Road, and continues northwest to a point adjacent to I-10. Subroute 4C3 continues northwest and parallels Benson Highway, then heads north along Alvernon Way and into central Tucson. The subroute proceeds northwest roughly parallel to I-10, then crosses I-10 and I-19. Subroute 4C3 proceeds northwest, with portions paralleling a 138 kV transmission line, adjacent to the Santa Cruz River and I-10. The subroute turns north, primarily parallel to a 138 kV transmission line, and crosses I-10 proceeding northwest, then crosses the CAP near the Tortolita Substation. Subroute 4C3 continues north from the Tortolita Substation, parallel to two 500 kV transmission lines and one 115 kV transmission line, then heads northeast and crosses the CAP. The subroute proceeds north, and then turns northwest approximately 2 miles southwest of SR 79, and reconnects with subroutes 4C1 and 4C2. Subroute 4C3 parallels approximately 118.3 miles of existing or designated utility corridors.

2.3.3 Alternatives Considered but Eliminated

According to the BLM NEPA handbook, an alternative may be eliminated from detailed analysis if (1) it is ineffective (i.e., it would not respond to the purpose and need); (2) it is technically or economically not feasible; (3) it is inconsistent with management objectives for the area (i.e., does not conform with land use plans); (4) its implementation is remote or speculative; (5) it would be substantially similar in design (function and purpose) to another alternative already analyzed; and (6) it would have substantially similar effects to another alternative already analyzed. This section includes descriptions of the alternatives that were considered but eliminated from detailed analysis, including eliminated transmission line routes, alternative transmission line technologies, and alternatives to the construction of a new transmission line.

As described in Section 2.2, input from the public and various agencies resulted in the addition, modification, or elimination of alternative transmission line routes evaluated during the scoping process. Following is a summary of the routes considered but eliminated from detailed study in this EIS. These routes are also illustrated on Figure 2-7; and Table A-9 of Appendix A includes

detailed information describing the alternative transmission routes (and link numbers) that were eliminated or modified and the justification for those changes. In addition to the elimination of various routes, minor modifications or realignments to some route segments identified during the development of alternatives were made in response to site-specific conditions. (Modified route segments are shown on Figure 2-7 as alternatives eliminated, and described in Appendix A.)

2.3.3.1 Alternative Transmission Line Routes Considered but Eliminated

Alternatives Considered but Eliminated in Route Group 1 and Route Group 2

Alternatives North of WSMR

Following the second scoping period conducted in the fall of 2009, Department of the Army personnel representing the WSMR recommended a set of additional alternative routes that would be located within Socorro, Torrance, or Valencia counties, between 20 and 60 miles north of the WSMR boundary. The WSMR conducts military training and testing missions, including low-level flight operations in airspace surrounding the WSMR[1]. The area north of the WSMR also includes the Northern Call-up Area, comprising 1.5 million acres of BLM, state, and private lands where missile test firings are conducted. Pursuant to private agreements between the WSMR and ranchers using the lands, the WSMR requires the evacuation of the Northern Call-up Area prior to and during missile testing. In order to minimize impacts to critical test missions, the WSMR identified a series of alternative routes known as WSMR Routes[2] 1, 1a, 2, 2a, and 2b, which would avoid this area (Figure 2-7).

In response to the military's request for consideration of the northern alternative routes, the study area was extended approximately 40 miles north of the initial study area boundary, as shown on Figure 2-7. Additional study of opportunities and constraints was conducted to identify a range of alternative routes within the expanded area, including the WSMR alternatives. The alternatives identified and considered by the BLM for detailed study in the EIS included a group of route segments referred to as subroutes 1A and 1B, which included portions of the WSMR Routes 1, 2, and 2a. Other segments of the WSMR routes were subsequently eliminated because of specific constraints (described below). The resulting set of alternatives would have a substantially similar function and purpose as the WSMR routes, providing a transmission line right-of-way between the proposed SunZia East Substation and the Midpoint Substation, and would avoid potential conflicts with military activities conducted in the area north of the WSMR.

WSMR Route 1 would begin at the proposed SunZia East Substation and continue northwest for 15 miles across a portion of the Cibola National Forest into Valencia County, south of Belen. WSMR Route 1 would continue for approximately 14 miles from north to south, parallel to an existing 345 kV line through the Sevilleta NWR. WSMR Route 1A was an alternative segment of WSMR Route 1 that would parallel the northern border of the Sevilleta NWR, and continue through the Sevilleta NWR along WSMR Route 1. After further review, it was determined that a

[1] Department of the Army. WSMR. Memorandum to Ms. Linda Rundell, BLM, New Mexico State Office, signed by John S. Regan, Brigadier General, Commanding.
[2] WSMR route number designations differ from Project subroute numbers.

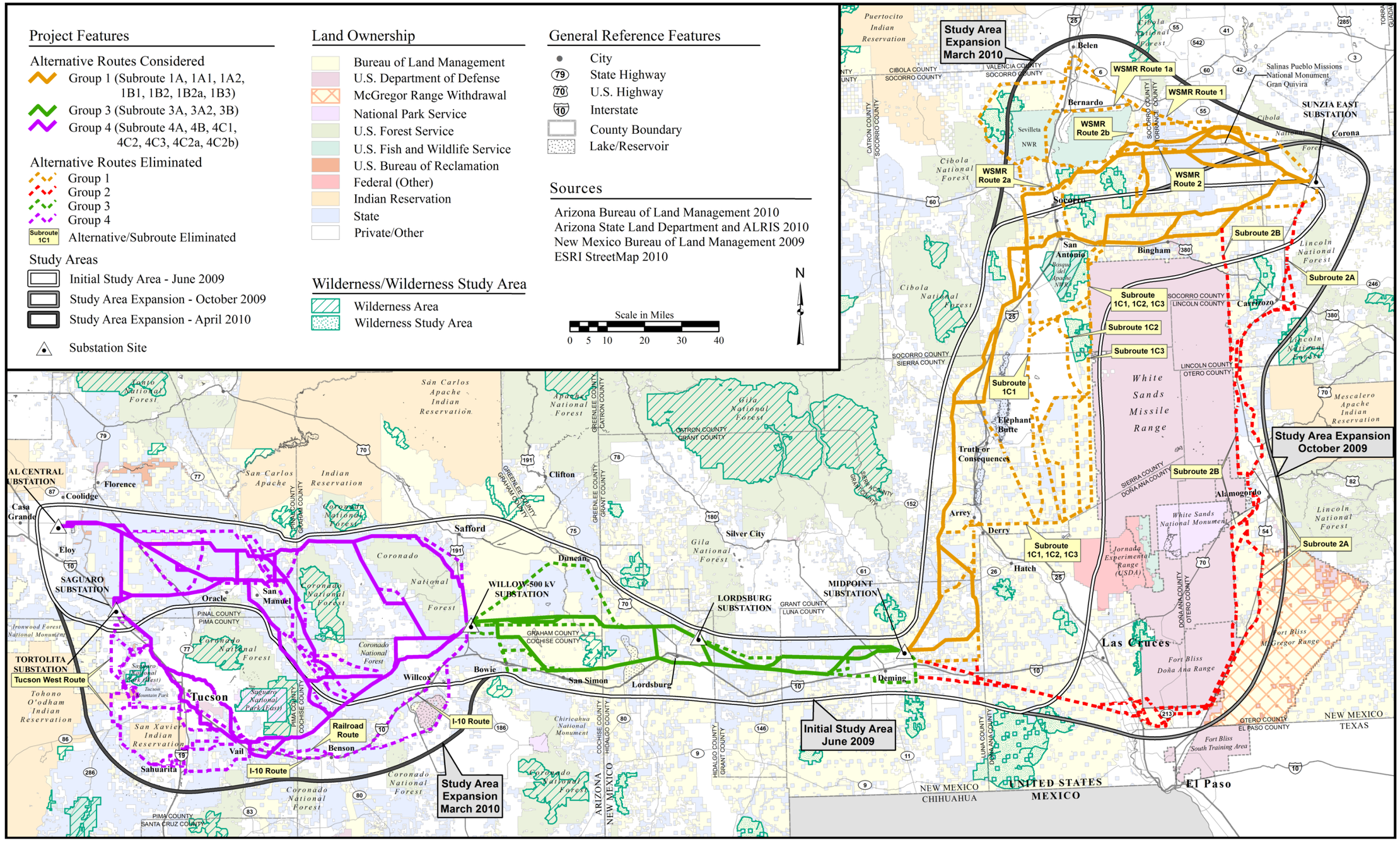

Figure 2-7. Alternatives Considered but Eliminated

This page intentionally left blank.

new transmission line right-of-way crossing the Sevilleta NWR would conflict with the refuge management policy and legal restrictions that prohibit commercial uses, as stated in the Sevilleta NWR land grant deed[1]. Therefore, WSMR Route 1 and WSMR Route 1A were eliminated from detailed study.

The WSMR also requested the evaluation of a route that would continue north of the Sevilleta NWR, heading west to avoid the Sierra Ladrones Wilderness Study Area (WSA) and the Ladron Mountain/Devil's Backbone Complex ACEC, before turning to the south and connecting with WSMR routes 1 and 2, west of the Rio Grande and south of the Sevilleta NWR. This route would not directly cross the Sevilleta NWR, but would cross a BLM right-of-way exclusion area and the Cibola National Forest. This (unnamed) route would be constrained to the east of the forest service land by the Sierra Ladrones WSA and the Sevilleta NWR, and would be located across the Cibola National Forest where there are no existing utility rights-of-way. According to the Cibola National Forest Land and Resource Management Plan, "*(where) no reasonable alternative exists, additional or new facilities should be restricted to existing rights-of-way"* (1985). This route was eliminated because it would not be compatible with Cibola National Forest land management policies, and it would cross a BLM right-of-way exclusion area. Alternative Subroute 1A would fulfill a substantially similar function and purpose, as stated above.

WSMR Route 2 would follow the alternative Subroute 1A from the SunZia East Substation to the northwest, following a portion of the southern boundary of the Sevilleta NWR across the Rio Grande before turning south, approximately 10 miles west of the Rio Grande (see Figure 2-7). Variations of WSMR Route 2 included Route 2a, which would also cross the Rio Grande near Socorro, and WSMR Route 2b, which would be located approximately 8 miles north of Subroute 1A where it would cross the Socorro-Torrance county line. WSMR Route 2b was recommended by the Department of the Army as an alternative to the Project alternative Subroute 1A in order to increase the distance between the transmission lines and LC 94, which is used to test-fire missiles onto the WSMR one to two times per year. Subroute 1A is approximately 2 miles north of LC 94, and WSMR Route 2b would be approximately 10 miles to the north. Although WSMR routes 2a and 2b would be substantially similar in purpose and function to Subroute 1A, these routes would impact a greater number of residential properties and ranch operations located north of Subroute 1A. WSMR has stated that, compared to WSMR Route 2a or 2b, transmission lines constructed along the Subroute 1A alignment would create a higher risk of potential "damage (to) the transmission lines within a 'safety zone' surrounding the launch site should a missile launched from LC 94 malfunction and need to be remotely destroyed."[2] Although the limits of the "safety zone" have not been determined, it is reasonable to assume that increasing the distance between the proposed transmission lines and LC 94 could avoid potential conflicts with launch malfunctions. However, the distance to effectively mitigate the risk of damage to

[1] The restriction in the Sevilleta NWR land grant deed in Section 3d, page 8, states; "The property shall not be sold, exchanged, transferred or abandoned. Nor shall it be leased or used for any commercial purpose other than where deemed appropriate by the Bureau and The Nature Conservancy for the purposes of sound wildlife management." Section 4, page 8, states; "If the property shall cease to be administered as a national wildlife refuge or should the Grantee breach the aforementioned use regulations, the title of the Grantee and its successors and assigns, shall cease and determine, and the title shall revert in fee simple to the Grantor" (Warranty Deed 1973).

[2] Comment to BLM from Renee Blotske, WSMR, February 22, 2012

the Project has not been determined. In addition, whether the risk of constructing transmission lines located 2 miles away, as opposed to WSMR Route 2b located 10 miles away, would require protection to minimize the risk of damage to Project facilities, relocation of LC 94, or other mitigation to avoid conflict with potential launch malfunctions. Therefore, the proposed WSMR alternative (either WSMR route 2a or 2b, 10 miles north of the Subroute 1A alignment) was not analyzed in detail in the Draft EIS because there would be no substantial advantage achieved by the using this alternative. However, based on additional information regarding WSMR operations and further analysis, the alignment for Subroute 1A1 was modified in order to reduce the risk of conflict between the proposed transmission lines and the LC 94, while limiting the potential for impacts to residential and ranch properties. The modified alignment (Subroute 1A2) is located within the area of analysis for Subroute 1A1 that was documented in the Draft EIS, and the centerline of the proposed Project right-of-way would be located approximately 3 miles north of Subroute 1A1. Additional mitigation to reduce risks associated with military operations may be developed in coordination with the Applicant and BLM.

On May 11, 2011, the DOD sent a letter to the BLM[1] in which the DOD identified several alternative route segments associated with the proposed Project and included their evaluation of potential effects of the respective routes to the DOD's missions. These included some segments that would have adverse effects on missions that "cannot be economically mitigated." The letter clarified the DOD's position on the northern alternative routes originally proposed during the scoping process. These routes would be located in the Northern Call-up Area, in proximity to Gran Quivira. The DOD's position was to provide an alternative route located north of Subroute 1A that would avoid adverse effects to critical test profiles. In response to their position, local alternatives to Subroute 1A north of the Gran Quivira were added for further study in the EIS (subroutes 1A1 and 1A2 and Local Alternative Link E83). According to the DOD, the remaining subroutes in the Northern Call-up Area (subroutes 1A, 1B1, 1B2, and 1B3) would present adverse effects that could not be economically mitigated. However, in this instance the BLM is the relevant decision-maker in determining whether to issue any rights-of-way traversing the Northern Call-up Area and consequently, the routes within the Northern Call-up Area were carried forward for further consideration and analysis. The BLM, responsible for determining the appropriate mitigation, will consider the DOD's comments and concerns.

An alternative route was identified to follow along an existing pipeline on the east side of the Rio Grande, between San Antonio and Socorro (Link E140, see Appendix A). Because this alternative would potentially result in greater cultural resource impacts along portions of the Camino Real National Historic Trail (NHT), and the function and purpose of Subroute 1A would be substantially similar to Link E140, that alternative segment was eliminated.

Alternatives East, South, and West of WSMR

As noted above, the May 11 DOD letter identified certain route segments that would "have an adverse effect on test and training at WSMR…" For purposes of clarification, the following is a brief description of two of the route groups discussed in the letter, as well as the general

[1] DOD letter sent to the BLM, and signed by Dorothy Robyn, Deputy Under Secretary of Defense (Installations and Environment); Samuel Kleinman, Deputy Under Secretary of Defense (Readiness); and David Duma, Principal Deputy Director (Operational Test and Evaluation).

treatment of each group in this EIS. One group of segments associated with the Rio Grande crossing between Arrey and Derry, New Mexico would be located between the Rio Grande and the WSMR[1] (subroutes 1C1, 1C2, and 1C3). Subroute 1C3 would also require use of the right-of-way on DOD land along Link A300, east of the Jornada del Muerto WSA. These segments would traverse at least a portion of land under the sole jurisdiction and control of the WSMR.

Another group of segments[2] located to the east and south of the WSMR would have crossed either portions of the WSMR or Fort Bliss. Route Group 2 included Subroute 2A, Subroute 2B, and local alternatives between the proposed SunZia East Substation and the proposed Midpoint Substation, east of White Sands. Although there is a BLM-designated, 1-mile-wide utility corridor parallel to US Route 54 as indicated in the BLM RMP for the McGregor Range, it could be used only with concurrence by the Secretary of the Army (BLM 2006). (PL 106-65 pursuant to the terms of the Engle Act withdrew the McGregor Range from the BLM's exclusive decision-making authority and vested the approval of rights-of-way traversing the Range with the DOD.) Therefore, the Department of the Army is the relevant decision-maker in determining whether to issue a right-of-way on these DOD lands and whether to require any mitigation measures. According to the Department of the Army, any rights-of-way crossing these DOD land segments could not be granted without significant and economically infeasible mitigation measures. Consequently, routes crossing DOD land were eliminated from further consideration, including subroutes 1C1, 1C2, 1C3, 2A, and 2B.[3]

Alternatives Considered but Eliminated in Route Group 3

Alternatives Considered but Eliminated Common to Subroute 3A

An alternative route was considered that would parallel the existing 345 kV transmission lines between Hidalgo County, New Mexico and Cochise County, Arizona; south of US Route 70 to a point south of Duncan, Arizona. The route would include a segment parallel to the Tucson Electric Power (TEP) 345 kV transmission lines heading southwest to the proposed Willow-500 kV Substation. This alternative route was eliminated because it would add an additional 14 miles of transmission line (including new access roads), would offer no environmental advantage over other more direct routes, and would be substantially similar in purpose and function to Subroute 3A.

Alternatives Considered but Eliminated Common to Subroute 3B

Alternative routes that would be located west of San Simon, crossing I-10 near Bowie, and connecting into the proposed Willow-500 kV Substation were considered but eliminated, because they would impact multiple residential properties and center-pivot irrigated farmlands. While selective structure placement could be applied to mitigate impacts to irrigated farmlands, it is not technically feasible to span the edge of center-pivot irrigated fields with two 500 kV

[1] Referenced as segments A180, A181, A183, A300, A312, and A313 in the May 11, 2011 letter, and are parts of subroutes 1C1, 1C2, and 1C3.
[2] Referenced as segments D260b, D270, D271, D272, D310, D320, and/or D800a/b in the May 11, 2011 letter, and are parts of Route Group 2.
[3] Note that Subroute 1B3 would cross an isolated 1-mile segment of DOD land, and was carried through detailed study.

transmission lines. Alternative subroutes 3A or 3B would be substantially similar to this alternative, but would avoid impacts in the Bowie area.

Alternatives Considered but Eliminated in Route Group 4

Alternatives Considered but Eliminated Common to Subroute 4B

Northwest of Willcox and in the vicinity of Bonita, Arizona, a local alternative for Subroute 4B was eliminated because it would conflict with center-pivot irrigated farmland. Alternative Subroute 4B would be substantially similar to this alternative, but would avoid impacts to center-pivot irrigated farmlands as described above.

The northernmost route located between the San Pedro River and the permitted Pinal Central Substation was eliminated, because it would conflict with The Nature Conservancy (TNC) conservation allotments in the vicinity of the San Pedro River crossing, and would be substantially similar to alternative subroutes 4A and 4B.

Alternatives Considered but Eliminated Common to Subroute 4C1

Alternative routes that would parallel the San Pedro River were eliminated because they would cross constraining features, including wildlife habitat, farmland, and residences. These alternatives, located within existing power line and pipeline corridors in the San Pedro River Valley, were identified during the regional study of opportunities and constraints. Other constraints to new rights-of-way in this area include TNC lands with deed restrictions that prohibit any new utility easements. An alternative route that would parallel an existing pipeline through the Muleshoe Ranch CMA was eliminated, because the alternative would cross a BLM-designated right-of-way exclusion area. The remaining route that was carried through for detailed study (Subroute 4C1) would cross a portion of the Muleshoe area designated as right-of-way avoidance along its southwestern boundary, and would be substantially similar to the eliminated alternatives.

Alternatives Considered but Eliminated Common to Subroute 4C2

A route was considered as an alternative to a portion of 4C2 that would parallel scenic highway SR 79, but was eliminated. This alternative would result in potential impacts to viewers along SR 79, whereas alternative subroutes 4C1 or 4C2 would be substantially similar and have less impact. Another route located west of Oracle that would include a segment parallel to an existing 500 kV transmission line was also eliminated, because it would require additional out-of-direction transmission line construction and would be substantially similar to 4C2.

Alternatives Considered but Eliminated Common to Subroute 4C3

During the second scoping period, additional routes that would be located along I-10 (I-10 Route), the UPRR corridor (Railroad Route), existing transmission line corridors through Pima County, and other local alternatives including the Tucson West Route were identified in response to public comments.

The I-10 Route alternatives proceed from the proposed Willow-500 kV Substation through Benson and Tucson, and were evaluated to identify opportunities and constraints as documented in Appendix A. Two alternatives were considered between Willcox and Benson; one that follows

I-10, and a second that follows portions of the existing 230 kV and 115 kV transmission lines, south of the Willcox Playa and ending in Vail, Arizona. The route would be located north of I-10 near the northwest end of the city of Benson and would proceed west on the north side of I-10 until reaching Vail. The route that follows I-10 was eliminated because it would impact residential areas near Willcox. Construction and operation of the proposed transmission lines using the I-10 Route alternative (following the existing transmission lines south of I-10) would potentially impact wildlife habitat near the Willcox Playa, as well as residences located south of the Willcox Playa near the Sunsites community and the Apache Power Plant, and in the city of Benson.

The I-10 Route alternative between Vail and Tucson would be located approximately 1 mile north of I-10 through the southeastern portion of Tucson, would continue to Alvernon Way, and then head north for approximately 1.5 miles. From that point, it would turn northwest, parallel to Aviation Highway and the railroad. This portion of the route would be directly west of and in line with the main runway at Davis-Monthan AFB. The right-of-way required for this I-10 Route alternative could displace approximately 415 single-family residences, 50 commercial buildings, 2 schools, and 130 industrial structures along the corridor between Vail and Speedway Boulevard in Tucson. Portions of this route would also cross historic districts in central Tucson, resulting in associated visual (aesthetic) impacts. Comments received during the scoping period included the following:

> The City of Tucson (City) is engaged in a long-term economic development and revitalization process for the Tucson Downtown. This effort is often referred to as Rio Nuevo. Siting of transmission lines could have a detrimental impact on this effort of [sic] they reduced the look and feel of the Downtown area. Rejuvenation of the Downtown is extremely important to the economic vitality of the entire region. Factors such as aesthetics play a critical role in the success of such efforts.[1]

The Railroad Route alternative was also considered in response to public concerns. It would parallel the UPRR between Benson and Tucson, and would continue through the city of Tucson parallel to the I-10 Route to Speedway Boulevard. Residential impacts along the Railroad Route northwest of Benson and Mescal, and near the town of Vail, would be similar to impacts of the I-10 Route described above.

The I-10 and Railroad routes were eliminated from further study as they would be substantially similar to Subroute 4C3, but would result in potentially greater impacts to land uses and wildlife habitat, as described above. Subroute 4C3 (C71, C110, C212, C260, C261, and F40a) would be located within the existing 345 kV transmission line corridor for approximately 30 miles, generally parallel to I-10 between Benson and the Tortolita Substation. The alternative Subroute 4C3 was carried forward for detailed analysis in the EIS because, to some extent, it would have potentially fewer land use impacts than the I-10 and Railroad routes through central Tucson.

Various alternative alignments were identified that would be located south and west of Tucson between Vail, Sahuarita, and the Tortolita Substation, including the Tucson West Route and

[1] Letter from A. Elias, Director, City of Tucson Housing and Community Development Department, June 10, 2010.

other local alternatives. During the evaluation of opportunities and constraints in the Tucson West area, constraints to acquisition of new rights-of-way in three areas were identified. First, it was determined that no new utility corridors would be permitted through the Tucson Mitigation Corridor, which is managed by Pima County, the AZGFD, and the BOR. Second, the Tohono O'odham Nation passed a resolution in opposition to the Project, thereby precluding a new right-of-way along the portion of the Tucson West Route alternative that would require crossing tribal land[1]. Third, the Tohono O'odham Nation also passed a resolution to deny any Project route that would cross the San Xavier District[2].

Other alternative routes through the city of Tucson were evaluated and found to have the following potential impacts:

- acquisition of residential, commercial, and industrial properties
- viewer impacts from Saguaro National Park and residential areas of Avra Valley
- conflicts with the Tucson redevelopment plan
- conflicts with aircraft operations at Tucson International Airport

The Tucson West Route and other local alternatives within the Tucson area were eliminated because they were substantially similar to Subroute 4C3, but would have greater environmental impacts and would conflict with city, county, and tribal government plans.

2.3.3.2 Alternative Transmission Technologies

Alternative Voltage Levels

The Project is planned as two single-circuit 500 kV transmission lines. One line would be an AC line with a transfer capability of 1,500 MW; the other line would be either an additional AC line with a 1,500 MW capacity or a DC line with a 3,000 MW capacity.

Voltage levels other than 500 kV could meet the Project transfer capability (see Section 2.3.3.3). A 765 kV transmission voltage represents the next level (greater than 500 kV) of AC voltage in current practice within the United States (but currently not within the western United States). Operation of higher voltage transmission lines will result in the overbuild of facilities for the existing transmission system. Higher voltage levels would result in excess capacity and increased costs, whereas lower voltage levels would require construction and operation of additional lines. Therefore, alternative voltage levels would not be technically feasible and have been eliminated from further evaluation.

Direct Current Transmission

The proposed action includes the option to construct and operate one line as a 500 kV AC line, with the other line as a 500 kV DC line; the main benefit of which is the greater control of power flows over long distances. The DC line would have increased transfer capability, and would transport energy directly from the region of high wind energy potential in New Mexico to central

[1] Resolution of the Schuk Toak District Council 2010
[2] Resolution of San Xavier District Council 2011

Arizona. In order to interconnect with an AC system, the DC current must be converted to AC. Converter substations require more land and are significantly more expensive than a typical 500 kV AC substation, rendering intermediate interconnections cost-prohibitive. As such, the DC line would have no intermediate substations, unlike an AC line. This means the Project would not be capable of (1) providing energy to reach local energy consumers, (2) interconnecting with the existing transmission system, or (3) accepting energy from generators along the transmission path. The lack of intermediate interconnection with the existing transmission systems would not improve reliability or relieve congestion on the existing system, and would therefore not meet the purpose and need. Although the environmental effects of constructing two DC lines would be substantially similar to the effects of one AC and one DC line, given the reasons above, at least one AC line is needed to meet the Applicant's objectives. Thus, the alternative to construct two DC lines was eliminated from further consideration.

Underground Transmission

In response to scoping comments, an alternative to construct and operate certain portions, or the entire length, of the proposed 500 kV transmission line project underground was considered but eliminated from further consideration. A technical feasibility study was prepared to evaluate the operational, economic, and environmental factors associated with underground transmission line systems (SunZia Transmission, et. al. 2011). Burial of the entire Project or portions of the Project is considered technically infeasible due to potential reliability concerns, operational risks, environmental impacts, and high construction cost. Additional contributing factors would include a limited supply of materials, and limited manufacturing capability to produce long lengths of 500 kV buried cable systems. The SunZia Project would be 20 times longer than the longest known underground 500 kV transmission line project (Williams and Gregory 2010).[1] Accordingly, potential construction and operation of portions of the Project using underground cable systems was eliminated from further consideration. Although burial of portions of the Project were not considered feasible, in response to public concerns, the effects of undergrounding a portion of the transmission lines at the Rio Grande crossing, north of the Bosque del Apache NWR, were evaluated as a potential mitigation alternative (see Section 4.16).

High-voltage underground transmission lines have markedly different technological requirements and are more difficult to place underground than lower voltage underground distribution lines, which provide electricity to individual homes and businesses. High-voltage underground lines (138 kV, 230 kV, and 345 kV) have been constructed in some parts of the United States, primarily for short distances, and usually where circumstances dictated that overhead lines were not feasible (e.g., in the vicinity of airports and urban centers). The only 500 kV underground transmission lines in the United States are at the Grand Coulee Dam. Due to concerns regarding underground transmission line failures, Bonneville Power Administration and the BOR are currently evaluating replacing the underground lines at Grand Coulee Dam with overhead transmission lines (Bonneville Power Administration 2009).

[1] The Shinkeiyo-Toyosu Project is the longest known 500 kV underground transmission line. The double-circuit 500 kV underground cable system was built in Tokyo, Japan in the year 2000. This project was a total length of 40 kilometers (20 miles) and required nine years to test, manufacture, and install.

Options for underground transmission cable systems include gas-insulated line (GIL), high-pressure fluid-filled (HPFF), self-contained fluid-filled (SCFF), and extruded dielectric. Summaries of each of the technological capabilities and their feasibility are presented as follows.

GIL systems typically require a hollow aluminum tube that is held by epoxy spacers in the center of a second, larger diameter aluminum pipe that is filled with gas. Historically, the gas pressurization system was entirely composed of sulfur hexafluoride (SF_6). As a result of the increased cost of SF_6 and of environmental concerns (i.e., releases to the air that contribute to ozone depletion), the current practice is to use a mixture of nitrogen (N_2) and SF_6. GIL technology at 500 kV levels has been implemented primarily within substations and is typically limited to distances less than 1,000 feet. Limited experience exists for 500 kV GIL systems beyond use within substations. GIL has limited applications, lacks the experience of completing underground transmission systems, has limited suppliers, and is not available for a potential DC application. For these reasons, it would not be technically feasible for use by the Project, and was eliminated from further evaluation.

HPFF is a pipe-type system where three high-quality paper insulated cables, along with a dielectric fluid, are installed within a single steel pipe. The dielectric fluid is maintained at a nominal pressure of 200 pounds per square inch to increase the insulation dielectric strength, suppress the possibility of ionization in the insulation, and prevent moisture and contamination from entering. A pressurization plant, which includes a large reserve tank to facilitate the expansion and contraction of the dielectric fluid as the system undergoes thermal cycling, would be required at one end of the line in a terminating station to retain the required pressure on the cable's insulation. The system is designed to relieve the pressure as the temperature increases and maintain the pressure as the temperature decreases. Industry-sponsored testing has proven that this technology can operate at the 500 kV level; however, there are only two known 500 kV installations, which are located in Japan. Using an HPFF system provides high reliability, but requires additional equipment, resulting in additional opportunity for component failure. Recently, application of HPFF is diminishing as are the number of manufacturers that are qualified to supply this cable, manufacture accessories, and assist with maintenance of these systems. A major concern of this transmission cable system is the potential for a leak and the release of the dielectric fluid into the environment. The EPA has expressed concern over fluid leaks from HPFF systems. Due to limited experience with HPFF at 500 kV levels, diminishing manufacturers, and environmental concerns, the HPFF cable system was eliminated from further evaluation.

SCFF cable systems consist of three cables insulated with a high-quality paper, each with a metallic shielding system and a plastic jacket. The copper or aluminum conductor has a hollow core, which provides for the installation of a dielectric fluid at a low pressure of 40 to 50 pounds per square inch. The dielectric fluid increases the insulation dielectric strength, suppresses the possibility of ionization in the insulation, and prevents moisture and contamination from entering. A plastic jacket encapsulates each completed cable. Similar to the HPFF system, the cable system would be pressurized and a fluid reservoir would be included inside one of the terminating stations. The cables would then be installed in a duct or in a tunnel. Because each cable is independently pressurized, in the event of a dielectric fluid leak, less fluid is released and can be more easily contained within the duct. This type of cable system has been used for 345 kV systems, two 525 kV AC systems, and one 500 kV DC system. Similar to the HPFF, but

to a lesser degree, this technology is diminishing in application and fluid leaks present an environmental concern. As such, SCFF was eliminated from further evaluation.

Extruded dielectric cable systems are typically composed of three copper or aluminum cables with a cross linked polyethylene (XLPE) insulation extruded on the conductor. A metallic shielding system and a plastic jacket complete the cable construction. At 500 kV, it is recommended that each cable be installed in a separate polyvinyl chloride conduit within a concrete enclosed duct bank. This cable technology has the benefits of a simplified installation method, in turn reducing operations costs as compared to other cable systems. The trend in AC underground transmission cables in recent years has been toward extruded XLPE cables, with less reliance on laminated cable systems (HPFF and SCFF). Extruded XLPE technology has been the primary cable for AC applications in the United States for the past 10 years, for voltages ranging from 69 to 230 kV. One 345 kV XLPE cable system is operational in the northeastern United States. For current underground transmission cable systems, extruded cables offer the largest number of cable manufacturers and the greatest technical support for installation and maintenance. An extruded AC cable with XLPE insulation is considered technically feasible for short distances.

To date, there are three known applications of underground 500 kV DC transmission lines; each uses SCFF technology. With the technology available for 500 kV converter stations today, high-voltage DC cables using XLPE insulation have proven unsuccessful at this voltage. If underground 500 kV DC cable installation was to be considered in the future, it would be necessary to continue to monitor research and development of this technology. Currently, 500 kV DC underground cable technology has been primarily used with submarine applications using SCFF cables for ocean or water crossings. Since 500 kV DC cables using XLPE insulation are presently not feasible, underground 500 kV DC transmission was eliminated from further consideration.

While XLPE has been proven to be technically feasible over short distances, it has not been proven technically feasible for the total distance required by the Project. Regardless of cable technology, the full length of the Project is approximately 20 times longer than the longest known 500 kV underground transmission project. As such, there are significant logistical concerns regarding the manufacture, construction, and operation of a 500 kV underground transmission project of such magnitude. For example, there may not be adequate worldwide cable manufacturing capability to produce 500 miles of 500 kV underground cable and accessories (or 1,000 miles for two transmission lines). In addition, due to technology limitations, a 500-mile 500 kV underground transmission line would likely have to be constructed as a DC transmission line. The cost to transition from underground to overhead facilities, coupled with the need to convert from DC to AC, would eliminate the possibility of intermediate interconnections and would not meet the Project objectives.

Cable System Support Bridge

Another method to construct transmission lines across the Rio Grande without placing the transmission lines (conductors or cables) on typical overhead transmission support structures, or under the river, would be a cable system support bridge. Occasionally, underground cable systems are attached to a vehicular bridge, although there are no known existing installations

where a bridge was constructed solely to support a high-voltage cable system. A conceptual design was developed to evaluate the feasibility of constructing a bridge across the Rio Grande. With this approach, a steel bridge would be built across the river and a cable system (using cables similar to those designed for underground use) would be affixed to a bridge. In order to meet structural and electrical safety design standards, the support bridge would be approximately 25 feet wide and would require a minimum of four 100-foot-tall towers to support the size and weight of four 36-inch-diameter pipes containing the cable systems for two 500 kV circuits. Additional towers would likely be necessary to support the weight of the structure if shorter towers were required.

In order to achieve the same objective as the underground concept that would include burial of a 2.3-mile segment of the transmission lines under the floodplain, farms, and densely vegetated areas, underground segments would remain between the bridge and the transition stations. The potential advantage of a cable bridge structure is that the bridge would be more visible to birds in flight than would overhead transmission lines, and could reduce the risk of potential avian collisions. However, construction of the bridge would result in a larger area of impact to riparian vegetation and habitat than either the overhead transmission lines or the underground alternative, and potentially conflict with access to the river. In addition, because of the structural requirements, the cable system support bridge would likely be more expensive than an underground cable crossing of the Rio Grande. Therefore, a cable system support bridge would not provide any advantage compared to the underground transmission line alternative.

New Transmission Technologies

New bulk-power transmission technologies are emerging. Current research and development indicate some technologies eventually may become viable alternatives to traditional overhead transmission systems. However, these technologies are experimental and not currently available for commercial use. For example, high temperature superconducting (HTS) cables—conductors made of materials that were first discovered in 1986—are now available from a number of manufacturers, primarily for niche applications. HTS cable systems at 345 kV and 500 kV are not yet available, and lower voltages are incapable of supporting the Project's transfer capability. Considerable research and development (including engineering, design, and installation of a demonstration project to determine the feasibility of the technology) is required to make HTS available at 500 kV or for this Project's transfer capability. For these reasons, a superconducting cable system is not a viable alternative and has been eliminated from further evaluation.

2.3.3.3 Alternatives to New Transmission

During the scoping process, various questions and comments were received from the public regarding potential alternatives to building new transmission lines. In response to these questions and comments, the following descriptions are provided, including the discussion of demand-side management (DSM), new generation, distributed generation, and existing transmission systems upgrades.

Demand-Side Management

DSM programs are implemented by electric utilities to encourage consumers to modify their levels and patterns of energy consumption. Also referred to as load management, DSM programs were originally intended to help defer the need for new sources of power, including generating and transmission facilities. Currently, DSM is typically implemented to manage energy consumption during peak hours. It achieves load reduction through various programs and customer agreements, including interrupting the power supply to individual appliances or equipment, requesting customers (usually large commercial and industrial customers) to reduce energy use during peak hours, and shifting loads (such as the use of certain appliances) from on-peak to off-peak hours. Utilities also promote energy efficiency to reduce overall energy consumption. Energy efficiency programs reduce consumption over many hours during the year through use of energy saving appliances and lighting, whereas DSM programs achieve an immediate reduction in peak load.

DSM and energy-efficiency programs are valuable tools that allow load-serving entities (utilities) to manage the demand for and consumption of energy on a local, temporary basis. However, the Project is needed to increase transfer capability (up to 4,500 MW) in an electrical grid that is currently insufficient to support the development, access, and transport of additional generating resources, including renewable energy. Increasing interstate transfer capability and access to renewable resources is needed to meet federal energy policy objectives and state RPS. Since DSM and energy-efficiency programs do not address these needs, they were eliminated from further consideration.

New Generation

In response to public comments stating that the need for new transmission lines could potentially be met by constructing new renewable generation facilities, new generation was considered as an alternative to construction and operation of the proposed Project. Several renewable generation facilities are proposed in New Mexico and Arizona. More than 7,000 MW of proposed generation projects (primarily from renewable sources) have provided interconnection requests to existing transmission owners (utilities) within the Project area.

As discussed in Chapter 1, the DOE studied transmission corridors to identify areas of congestion, including areas where development of new renewable generation resources was inhibited by insufficient transmission facilities or transfer capability. The DOE report characterizes the need to resolve current transmission congestion as "urgent," as demonstrated by the large number of both wind and solar projects that have applied for interconnection to the transmission grid, but cannot be built due to insufficient transfer capability. In addition, the Western Renewable Energy Zone study identified 11,300 MW of potential wind resources near the eastern terminus of the Project, and 10,500 MW of solar potential in southwest New Mexico and southeast Arizona; but notes that "lack of cost effective transmission access was, and remains, the greatest impediment to the rapid development" of these resources (WGA and DOE 2009).

The Project is needed to increase available transfer capability in an electrical grid that is currently insufficient to support the development, access, and transport of additional energy-generating resources, including renewable energy; thereby relieving existing transmission

congestion, allowing additional electricity to be generated and transported to western power markets and load centers in the Desert Southwest. The Project would be located near areas of undeveloped renewable resource potential, to provide a path for renewable energy delivery. The addition of new generation within the Project area would require new transmission, and therefore would not address the need for additional transfer capability. As such, the alternative to add new renewable generation was eliminated from consideration in this EIS.

Distributed Generation

Distributed generation resources are small-scale power generation technologies that are usually installed at or near the location where the generated power is used.

Distributed generation systems range in size from approximately 5 kilowatts to 10 MW, in contrast to centralized generation resources that range from 10 MW to more than 1,000 MW per site. Distributed generation resource technologies include photovoltaic (PV), energy storage devices, microturbines, solar, wind, and fuel cells. One common example of distributed generation is roof**top** solar panels.

Distributed generation would provide small-scale local renewable energy generation opportunities. Although distributed generation may increase local regional transfer capability, it would not increase regional transfer capability by a minimum of 3,000 MW across the Southwest; and it would not increase reliability or transfer capability on a regional transmission system scale. Therefore, the development of distributed generation resources would not meet the purpose and need and was eliminated from further consideration.

Existing Transmission Systems Upgrades

The Applicant applied for right-of-way on BLM land to accommodate two new 500 kV transmission lines with a combined transfer capability of approximately 3,000 MW (Option A) or 4,500 MW (Option B). The National Electrical Safety Code (NESC) contains the basic provisions that are considered necessary for the safety of employees and the public during transmission line construction and operation (Institute of Electrical and Electronics Engineers [IEEE] 2010). Transmission line design characteristics are interrelated, such that adjusting one variable often requires the adjustment of other characteristics to maintain compliance with the NESC. Examples of transmission line design characteristics include, but are not limited to: ground clearance (i.e., the distance between the ground and the lowest sagging point on the wire), structure height, structure width, span (i.e., the distance between structures), and voltage. Right-of-way widths directly relate to safety requirements associated with design characteristics for a given transmission line.

As stated in *The Design, Construction, and Operation of Long-Distance High-Voltage Electricity Transmission Technologies* (Argonne 2007), the function of the right-of-way is to provide "…a safety margin between the transmission facilities and surrounding structures and vegetation. The right-of-way also provides a path for ground-based inspections and access to transmission towers and other line components, if repairs are needed. Failure to maintain an adequate right-of-way can result in dangerous situations, including ground faults.…The use of a common corridor of right-of-way for multiple transmission lines is likely to be restricted if it presents a credible risk

of a multicircuit outage. Mitigation measures, principally increasing line spacing beyond that required for fault protection, may be used to reduce risk."

In addition, the Argonne report indicates that multiple lines in a single corridor are subject to the following hazards:

a) *A tower from one line falling against conductors of an adjacent line*
b) *A shield wire (grounded lightning protector connecting the tops of the towers) being dragged onto adjacent lines by an aircraft*
c) *An aircraft damaging more than one circuit*
d) *Fire or smoke on the right-of-way*
e) *Lightning strikes*
f) *Deliberate malicious damage*

"A line separation of at least one span (perhaps 700 feet) has proven effective in avoiding multicircuit outages" (*ibid*).

Table 2-3 provides the typical transfer capability and right-of-way for various sizes of transmission lines.

Table 2-3. Typical Transmission Line Transfer Capabilities and Rights-of-Way

Transmission Line Voltage	Typical Transfer Capability[1] (MW)	Typical Right-of-Way Width[2] (feet)
115 kV (AC)	150 to 200	35 to 50
138 kV (AC)	200 to 400	35 to 50
230 kV (AC)	400 to 800	50 to 75
345 kV (AC)	800 to 1,200	150 to 175
500 kV (AC)	1,500 to 2,000	200 to 250
500 kV (DC)	3,000 to 3,500	200 to 250

[1] Calculated based on electrical current capability of the wire.
[2] Typical right-of-way widths as provided by TEP (2011) and consistent with their transmission facilities.

The existing extra-high voltage (EHV) transmission system in New Mexico and southern Arizona is characterized by a 345 kV backbone, which feeds lower voltage systems (e.g., 230 kV, 138 kV, and 115 kV) to meet local load-serving needs. EHV transmission facilities, specifically 345 kV and 500 kV, are more efficient (i.e., less line or energy loss and more transfer capability for the same current level) for longer distance energy delivery, but require significantly more land for substations and for equipment costs compared to lower voltage systems. The transmission path in southwestern New Mexico is one of the most heavily used and congested transmission paths in the West (DOE 2009). Because the existing system is operating near capacity, increasing from 345 kV to 500 kV would not achieve the added regional transfer capability planned for the Project while still maintaining existing capacity reserved for the respective transmission owner. In addition, the existing transmission system in southern New Mexico and southern Arizona has limited redundancy; therefore, there are limitations to taking these lines out of service for an extended amount of time due to their importance in delivering energy to regional loads. Several of these lines are delivering energy from baseload resources (e.g., Palo Verde, Springerville, San Juan, etc.), which are critical to provide a consistent and reliable supply of electricity. The transmission owners are required by the NERC to meet

reliability standards under normal and emergency conditions. If the existing transmission lines were taken out of service to perform upgrades within these areas, consumers could be at a significant risk for exposure to power outages for the duration of the upgrade process.

For the reasons stated above, constructing the full length of the Project as an upgrade to the existing transmission system is not considered reasonable or feasible. The following discussion pertains to performing upgrades on only those portions of the existing transmission system in the area of Tucson, Arizona.

Tucson Area Upgrades

The electrical system in the Tucson area consists of 138 kV (operated by TEP), 115 kV (operated by Western Area Power Administration), and lower voltage distribution lines. Within this area, transfer capacities for 138 kV lines are typically 310 to 350 MW, and transfer capacities for 115 kV lines are typically 180 MW. The rights-of-way for these 138 kV and 115 kV lines vary in width throughout the system, although they are typically 50 feet wide. By comparison, the proposed Project would be capable of transferring approximately 3,000 MW or 4,500 MW and would require 200 feet of right-of-way per transmission line, based on Project design characteristics and to be compliant with NESC requirements (NESC defines the minimum safe electrical clearances to ground and adjacent facilities).

The two primary methods for upgrading an existing system include a tear-down and rebuild in-place, or construction of the new facilities adjacent to the existing facilities, then removing the old facilities once the new become operational. Given the limited redundancy of the existing system, a tear-down and rebuild in-place is considered unreasonable as it could expose consumers to significant power outages for the duration of the upgrade process. Alternatively, the construction of new transmission towers parallel to the existing transmission towers would minimize the risk of outages for local consumers. Upgrading an existing transmission line could consist of either replacing lower voltage facilities with higher voltage facilities, or building new double-circuit structures that could accommodate the capacity of the existing wires on one side of the structure and the new wires on the other side of the structure (Figure 2-8).

Existing electrical system structures (towers or poles), wires, and substations were built in accordance to design specifications for their given voltage levels. Replacing lower voltage wires with higher voltage wires would require building new structures and substation interconnections using the design requirements for the higher voltage transmission system. These requirements include larger substation footprints, additional substation equipment, taller structures with larger wires, and wider rights-of-way to accommodate the larger structures and to meet applicable NESC safety requirements.

Replacing the existing 138 kV or 115 kV with 500 kV facilities would require that the transfer of transfer capability for the existing system and that of the Project be consolidated into one set of wires. This approach would reduce the Project's ability to meet the intended minimum transfer capability of approximately 3,000 MW, because a portion of the capacity of one of the two proposed transmission lines for the Project would be reserved for service to local transmission owners, and would require a more robust system to achieve the total transfer capability. Using DC technology with this approach would likely not be feasible due to the cost of the DC

conversion stations and the inability to have multiple DC taps to the underlying system, as described in *DC Option* (below).

The existing 138 kV and 115 kV lines are integrated to support power flows to lower voltage systems; as such, upgrading the existing transmission lines would require upgrading all substations along the existing path to include equipment that could support the existing interconnections. Transformers (a substation component) are used within substations to change from one voltage level to another. Because 500 kV transmission lines are not intended to connect directly to voltage levels that serve local loads, manufacturers do not make transformers that accommodate these types of voltage changes. As a result, several transformers would be required to change the voltage from 500 kV to lower voltage levels that serve local loads. For example, a substation may require a transformer to change from 500 kV to 138 kV or 115 kV, and another transformer to change from 138 kV or 115 kV to a lower distribution voltage level. Typical substations for 138 kV and 115 kV systems encompass approximately 2 to 3 acres; whereas 500 kV substation footprints are typically a minimum of 20 acres to accommodate the additional larger equipment required for a 500 kV transmission system. The cost to upgrade equipment and maintain the existing substation interconnections would be approximately $30 million to $50 million per substation. Additional costs associated with land acquisition for substation expansions would vary depending on the existing uses, and would be higher for substations surrounded by houses or businesses.

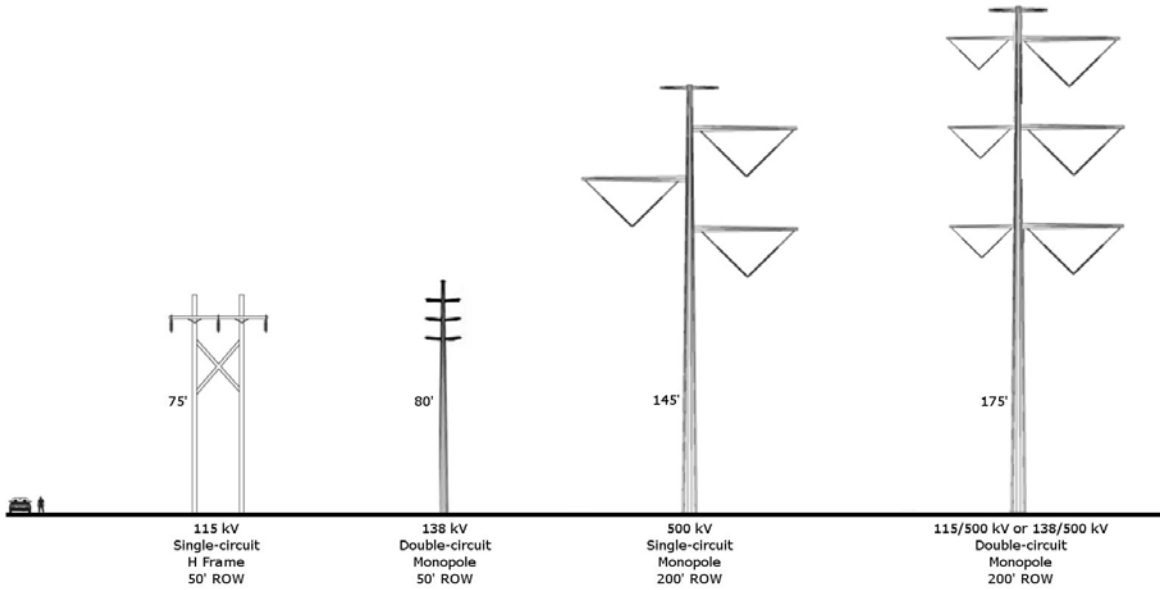

Figure 2-8. Comparison of Typical Structures Replacing Lower Voltage Facilities with Higher Voltage Facilities

If existing electrical system upgrades were implemented and the 1,500 MW transfer capability of one of the two proposed transmission lines was achieved, a new, second transmission line would still be needed to achieve the Project's planned transfer capability. As previously stated, rights-of-way for 138 kV and 115 kV are typically 50 feet wide; whereas the Project would require 400 feet of right-of-way based on Project design characteristics and to be compliant with NESC

requirements anticipated for the Project. In narrow areas, due to special conditions such as built environments that do not contain a corridor that would accommodate 400 feet of new right-of-way width, the total right-of-way width for both transmission lines may be made as narrow as 330 feet by adjusting the design characteristics (e.g., structure height, structure width, span length, sharing of conductor blowout, etc.) for the Project. Existing transmission system upgrades could not be accomplished without substantial expansion of the existing right-of-way.

Double-circuit Structures

Another option for upgrading the existing system consists of constructing new double-circuit structures that could accommodate the size of the existing wires on one side of the structure and the new wires for the Project on the other side of the structure. Considerations for performing existing system upgrades using a double-circuit structure would be similar to the discussion above, with the following exceptions: (1) this approach would not require substation modifications, as the lower voltage wires would be used to maintain the existing interconnections; and (2) this approach would not subtract capacity from the 500 kV wires, because the capacity required to serve the existing commitment of the local transmission owner would be met through the lower voltage wires on one side of the structure, while the 500 kV wires on the other side of the structure would be dedicated for use by the Project. This approach would require a minimum of 200 feet per circuit, and would require an expansion of the existing right-of-way by as much as 150 feet for each circuit (assuming the existing line has 50 feet of existing right-of-way). In most areas within and around Tucson, this expansion of right-of-way would result in significant land use impacts.

DC Option

In order to maintain the integrity of the existing transmission system, upgrades would have to maintain the connectivity of the transmission and distribution systems. DC transmission lines are designed to accommodate greater power flows for long distances with less power loss over the distance of the line, and typically do not allow for intermediate substations. By using voltage source converter technology, a DC transmission line could maintain some substation interconnections; however, the Project has not evaluated the use of voltage source converters and there is currently only one supplier of this technology. Due to limitations on maintaining substation connections with the existing electrical system, replacing the existing, lower voltage facilities with higher voltage DC facilities was determined not feasible for the Project.

Colocating one AC circuit and one DC circuit on the same structure is considered unreasonable and not technically feasible for this Project. Colocation of the circuits for the entire length of the Project would create reliability concerns by placing the method of transport for 4500 MW of transfer capability on a single structure. Because upgrading the existing electrical system to include a DC transmission line is not feasible, a separate new transmission line would have to be constructed using DC technology in order to achieve 4,500 MW of transfer capability. Existing transmission system upgrades could not be accomplished without substantial expansion of the existing right-of-way. In most cases, the total right-of-way requirements should be assumed to be 200 feet per circuit, for a total of 400 feet, to accommodate a separate circuit to be operated at 500 kV DC.

Environmental Impacts

Various environmental impacts would result if it were feasible to implement the proposed Project by upgrading and consolidating existing transmission lines within existing rights-of-way in or near the I-10 corridor. Dense land uses, including residences, businesses, and industrial operations, have been built up to the edge of the existing rights-of-way within the city of Tucson. As such, larger transmission line structures would result in major visual impacts to residences, including those within historic districts in south and central Tucson, and to parks and trails and other areas.

Public concerns have also been expressed regarding potential health effects associated with exposure to electric and magnetic fields (EMF). Although specific health effects have not been determined, upgrading existing transmission lines within existing rights-of-way adjacent to residential areas or schools could result in increased human exposure to EMF. In addition, construction within or adjacent to residential areas could result in disproportionately high and adverse impacts to minority and low-income populations subject to EO 12898, which addresses environmental justice.

The TEP 138 kV transmission lines through the Tucson area have been constructed within the major drainage corridors of the Pantano Wash, Rillito River, and Santa Cruz River. Major portions of these watercourses have been dedicated to Pima County for flood control and recreation uses, and for wetlands replacement mitigation in compliance with Section 404 of the Clean Water Act (CWA). Pima County has indicated that construction or replacement of transmission lines through these drainage corridors would conflict with these uses and mitigation lands[1].

In summary, upgrading existing transmission facilities would add substantial cost to the Project due to the construction of substation upgrades, acquisition of additional right-of-way width, and associated condemnation. This alternative would result in substantial environmental impacts, and would likely not achieve the transfer capability required to meet the Applicant's objectives. Therefore, the alternative to upgrade existing transmission facilities was eliminated from further consideration.

2.4 DESCRIPTION OF PROPOSED ACTION AND PLAN OF DEVELOPMENT

The proposed action is for the BLM to issue a right-of-way grant to SunZia for the construction and operation of two 500 kV transmission lines from the proposed SunZia East Substation in New Mexico to the permitted Pinal Central Substation in Arizona. Project facilities, design characteristics, construction activities, and mitigation measures generally would be consistent regardless of the route alternative selected. Features that are common to all action alternatives are described in this section. This Project description is the basis for the analysis of impacts in Chapter 4.

[1] A local alternative route was analyzed and considered in this EIS that would include new construction of two 500 kV transmission lines within these drainage corridors (see Section 2.3.2, Pantano/Rillito Local Alternative). Construction of the proposed transmission lines using this route would require replacement of the existing transmission structures in some locations, and requires additional right-of-way to provide for adequate separation between the transmission lines.

A Final POD would be required to be approved by the BLM prior to any construction or surface disturbing activities occurring on the right-of-way. A BLM Notice to Proceed authorization would not be issued until the Final POD has been approved by the BLM. In the interim, a Preliminary POD has been prepared in conjunction with this Final EIS and is available for review at the BLM New Mexico State Office or online[1]. The Final POD would include detailed engineering, mitigation, and environmental mapping upon approval of the final and approved route alignment. The POD would detail the methods and procedures that would be used in construction of the Project and serves as a reference for contractors, construction crews, agency personnel, resource inspectors, and environmental compliance monitors. In addition to a detailed Project description, the POD would contain BMPs and mitigation measures; specify environmental compliance field activities; and include a number of plans developed to achieve regulatory compliance and resources protection, including:

- Construction Plan and Program
- Flagging, Fencing, and Signage Plan
- Transportation Management Plan
- Fire Protection Plan
- Blasting Plan Methodology
- Erosion, Dust Control, and Air Quality Plan
- Hazardous Materials Management Plan
- Emergency Preparedness and Response Plan Guidelines
- Environmental Compliance Management Plan
- Biological Resources Protection Plan
- Avian Protection Plan
- Noxious Weed Management Plan
- Cultural Resources Historic Properties Treatment Plan (HPTP)/Monitoring and Discovery Plan/NAGPRA Plan of Action/PA
- Paleontological Resources Treatment Plan (PRTP)
- Stormwater Pollution Prevention Plan Methodology
- Right-of-Way Preparation, Reclamation, and Monitoring Framework Plan

An Avian Protection Plan and migratory bird conservation strategy would be approved by the USFWS prior to the BLM's Notice to Proceed. The vegetation management plan will be included in the Final POD as part of the Biological Resources Protection Plan.

[1] http://www.blm.gov/nm/st/en/prog/more/lands_realty/sunzia_southwest_transmission.html

2.4.1 Overhead Transmission Lines

Two 500 kV overhead transmission lines would be constructed for the proposed Project. Both AC and DC configurations are being considered as design options, as follows:

> **Option A**: Two transmission lines would be constructed and operated, each as a 500 kV single-circuit, AC facility.
>
> **Option B**: One transmission line would be constructed and operated as a 500 kV single-circuit AC facility, and one transmission line would be constructed and operated as a 500 kV single-circuit DC facility.

Each transmission line would extend between the proposed SunZia East Substation and the permitted Pinal Central Substation for approximately 500 miles, depending on the alternative route selected. The transmission line components include structures, foundations, conductors, insulators and associated hardware, overhead groundwire (OHGW), and fiber optic facilities. Table 2-4 summarizes typical design characteristics for each of the two options, and Figure 2-9 is a diagram of the typical transmission line and right-of-way configuration.

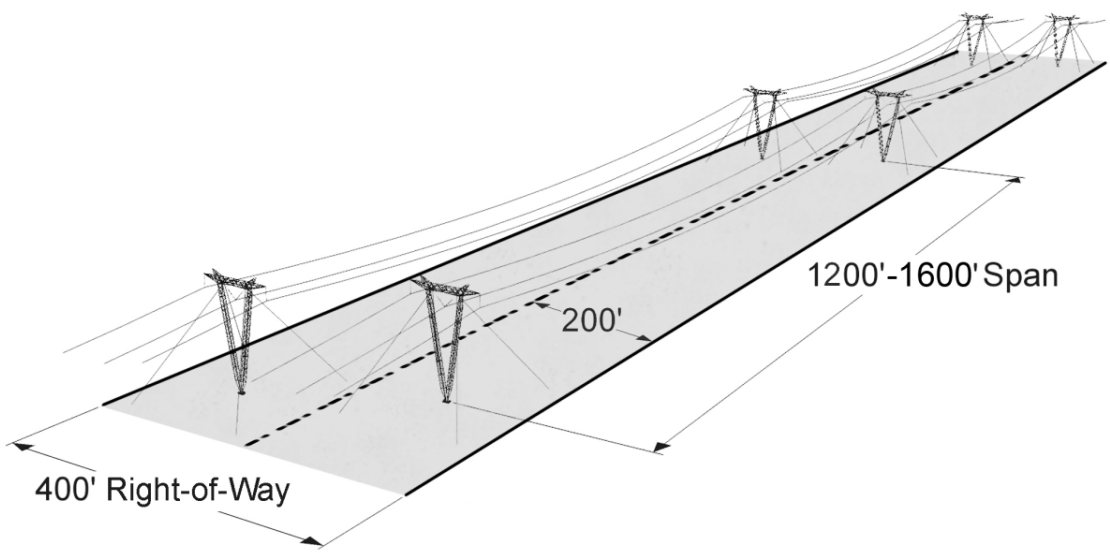

Figure 2-9. Typical 500 kV Transmission Line and Right-of-Way Configuration

Table 2-4. Typical Design Characteristics of the Proposed 500 kV Transmission Line Project		
General Description		
Structure type	Guyed and self-supporting steel tubular and lattice structures	
Structure height	Typical 135 feet; range of height varies with span and terrain	
Span length	1,200 to 1,600 feet (3 to 4 structures per mile)	
Right-of-way width, Typical Narrow, due to special conditions	200 feet per transmission line (circuit) – 400 feet total for two transmission lines 165 feet per transmission line (circuit) – 330 feet total for two transmission lines	
Electrical Properties		
Structure Base Areas	**Option A**	**Option B**
Nominal voltage in kilovolts	500 kV AC	500 kV AC and 500 kV DC
Capacity in megawatts	3,000 MW	4,500 MW
Circuit configuration (preliminary determination)	Horizontal, vertical, or delta	AC: Horizontal, vertical, or delta DC: Horizontal
Conductors 1590 ACSR 'Lapwing,' 1.5-inch diameter conductor (3 conductors/bundle)	3 conductor bundles per phase	AC: 3 conductor bundles per phase DC: 2 conductor bundles per phase
Minimum conductor clearance above ground (per NESC requirements)	30 to 35 feet	AC: 30 to 35 feet DC: 30 to 38 feet
Land Permanently Disturbed		
Permanent Structure Base Area Required[1]		
Guyed (lattice or tubular) 4-foot diameter base plus 4 anchors (1 approximate 45-foot x 45-foot base area per line)	4,050 sq. feet (2,025 sq. feet per structure)	
Self-supporting Lattice 3-foot diameter x 4 legs (1 approximate 60-foot x 60-foot base area per line)	7,200 sq. feet (3,600 sq. feet per structure)	
Self-supporting Tubular 8-foot diameter (1 approximate 53-foot x 53-foot base area per line)	5,650 sq. feet (2,825 sq. feet per structure)	
Dead-end Lattice 6-foot diameter x 4 legs (1 approximate 55-foot x 55-foot base area per line)	6,050 sq. feet (3,025 sq. feet per structure)	
Dead-end Tubular [2] AC: 10-foot diameter (3 approximate 33-foot x 33-foot base areas for Option A; 1 approximate 45-foot x 45-foot for Option B) DC: 12-foot diameter (1 approximate 45-foot x 45-foot base area)	**Option A** 6,550 sq. feet (3,225 sq. feet per structure)	**Option B** 4,050 sq. feet (2,025 sq. feet per structure)
Ancillary Facilities		
Fiber Optic Communication Regeneration Station	100 feet x 100 feet (0.23 acre); located at 75-mile intervals	
Ground electrode facility	One facility near each terminus (DC only)	
Access Roads[3]		
New roads or existing road improvement	24 feet total width (20-foot-wide travelway and 2-foot-wide berms/drainage on each side)	

Table 2-4. Typical Design Characteristics of the Proposed 500 kV Transmission Line Project	
Land Temporarily Disturbed	
Structure work area[4]	Each structure site will be 200 feet x 200 feet (0.9 acre)
Construction yard	One yard every 40 miles; approximately 15 to 20 acres per site
Concrete batch plant	One plant every 30 miles; approximately 3 to 5 acres per site
Wire pulling/tensioning/splicing site (full) Wire pulling/tensioning/splicing site (reduced)	Approximately 200 feet x 600 feet (2.8 acres); one every 18,000 feet, alternating every 9,000 feet with reduced site Approximately 200 feet x 400 feet (1.8 acres); one every 18,000 feet alternating every 9,000 feet with full site
Vegetation Management	
Conductor clearance to meet safety standards[5]	Trimming trees and woody vegetation within the wire zone. Trimming may be required within the border zone in riparian and woodland areas.

NOTES:
[1]Permanent structure base areas include the area surrounding each structure foundation necessary for Project maintenance, rounded up to the nearest 50 sq. feet.
[2]Diameter indicated for each single pole; the dead-end structure for the AC line could have a single pole or three pole configuration.
[3]Typical main access road or spur road width indicated; maximum road widths will be specified in the POD and are dependent on terrain and construction specifications for selected transmission line route.
[4]Temporary structure work area is inclusive of permanent structure base area.
[5]NESC standards require minimum ground clearance of 30 feet (AC) to 38 feet (DC) for 500 kV transmission lines at the maximum allowable conductor sag. NERC standards require minimum clearance of approximately 6 feet (AC) to 9 feet (DC) between vegetation and conductors based on the system voltage and elevation. Typical wire zone is 90 feet wide for each circuit, which includes 10 feet on either side of the outside conductor location for blowout. The border zone is the remaining portion of the right-of-way.
ACSR = Aluminum conductor, steel reinforced

2.4.2 Structures

Seven typical 500 kV structure types, as described below, could be used for the proposed Project. Additional structure types may be identified during future engineering and design, but are anticipated to result in similar impacts to those identified in this EIS. The locations for each structure type would be determined during final design, and selected based on site-specific conditions (i.e., topography, terrain, land use, constrained right-of-way, etc.) or to mitigate impacts resulting from the Project. Proposed structures vary in height, with none anticipated to exceed 200 feet, in order to remain below the threshold at which the structure may affect navigable airspace based on Federal Aviation Administration (FAA) regulations. Structure components are illustrated on Figure 2-10.

Similar structure types would be used for either the AC or DC transmission lines, except that each DC structure would contain only two sets of bundled conductors, versus three sets for an AC structure. In addition, the guyed structures would be vertical for the DC transmission line, compared to V-shaped towers for the AC transmission line.

Guyed "V" Lattice – The single-circuit, guyed, V-shaped lattice (GVL) structure would be galvanized steel (Figure 2-11). The typical structure height would be 135 feet, ranging between 130 and 160 feet, with a typical span between structures of 1,400 feet. This tangent structure would be used where the AC transmission line proceeds in a straight line or directly parallel to

the adjacent transmission line, and up to an angle of 15 degrees. Due to the simplicity of the design and assembly, the GVL is cost efficient and results in less ground disturbance during construction than other structure design options. The DC line would require use of the guyed lattice tangent structure.

Guyed "V" Tubular – The single-circuit, guyed, V-shaped tubular (GVT) structure would be made of self-weathering or galvanized steel (Figure 2-12), and would be a tangent structure used for AC lines as an alternate to the GVL. The DC line would require use of the guyed tubular tangent structure (Figure 2-19). The typical structure height would be 135 feet, and would range between 130 and 160 feet with a typical span of 1,400 feet between structures.

Self-Supporting Lattice – The single-circuit, self-supporting lattice (SSL) structure would be made of galvanized steel (Figure 2-13). The typical structure height would be 135 feet, ranging between 130 and 160 feet, with a typical structure span of 1,500 feet. The SSL structure could be used as a tangent structure, but also can accommodate angles (0 to 30 degrees) and longer spans than the GVL or GVT structures. However, the SSL structure is heavier and requires larger foundations than the GVL or GVT structures. Maintenance activities are faster on the SSL structure than on other structure design options, due to the configuration of the circuits and climbing legs.

Self-Supporting Tubular – The single-circuit, self-supporting tubular (SST) structure would be made of self-weathering or galvanized steel (Figure 2-14). The typical structure height would be 145 feet, ranging between 145 and 170 feet, with a typical structure span of 1,000 feet. The SST structure has a smaller footprint and typically would be used in areas of narrow or constrained right-of-way; however, these structures would be taller and closer together (requiring more structures per mile) than other tangent structures proposed for the Project.

Dead-end Lattice – A single-circuit, self-supporting, dead-end lattice (DEL) structure made of galvanized steel (Figure 2-15) would primarily be used for large angles or terminations. The DEL structure would have a larger footprint than the SSL, due to a larger base and a wider horizontal configuration. The typical structure height would be 135 feet, ranging between 130 and 160 feet.

Dead-end Tubular – A single-circuit, self-supporting, dead-end tubular (DET) structure made of self-weathering or galvanized steel (Figure 2-16) would primarily be used for larger angles in those areas where right-of-way may be too constrained to accommodate a DEL structure. The typical structure height would be 145 feet, ranging between 130 and 160 feet.

Dead-end Tubular, 3-Pole – The dead-end tubular, 3-pole (DET3) alternative to the DET is a self-supporting tubular steel structure also used for larger angles; however, the DET3 includes three poles, each with a single conductor bundle (Figure 2-17). The typical structure height would be 100 feet. The DET3 structure would be used for the AC structure in areas where a lower height is desired, although the three adjacent structures would require additional right-of-way and would have a larger footprint.

Figures 2-18 through 2-23 show the six structures configured for a DC transmission line (except for the DET3).

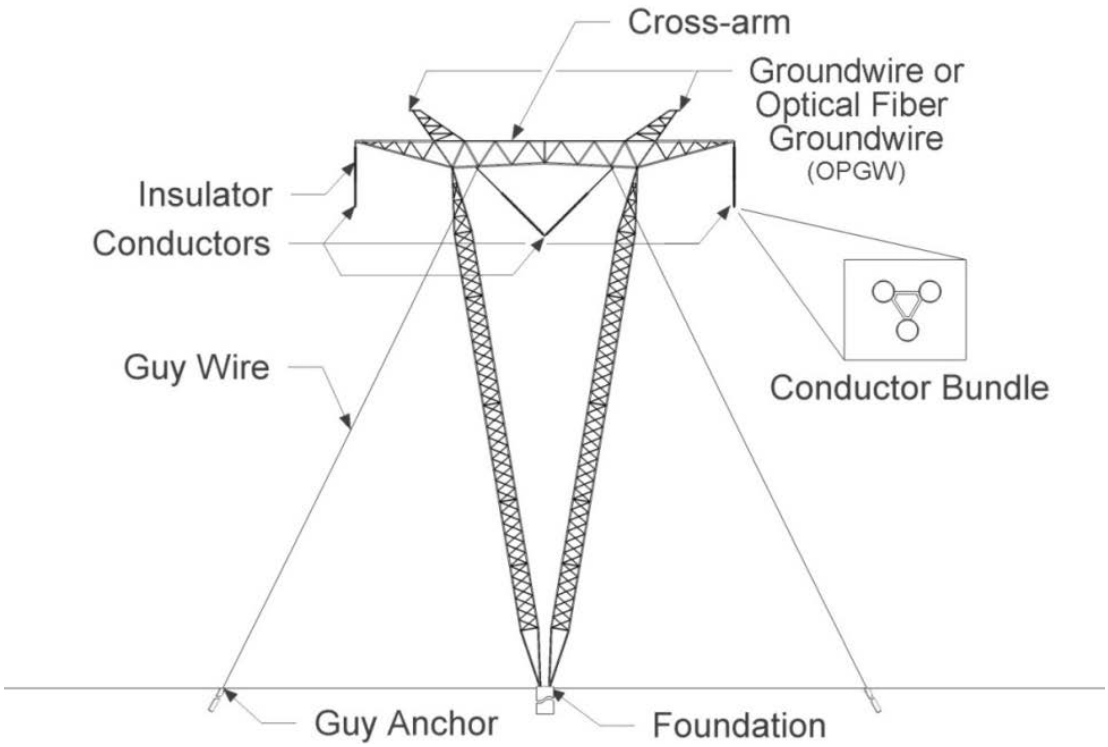

Figure 2-10. Typical 500 kV Structure Diagram

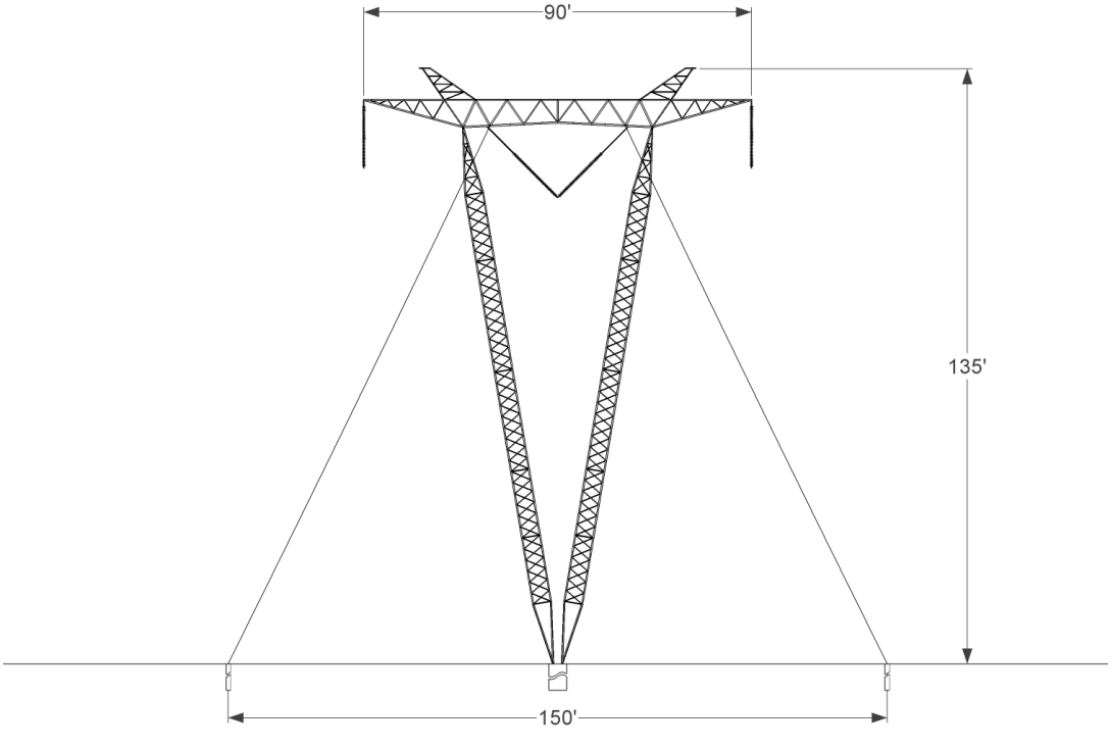

Figure 2-11. Typical AC Guyed "V" Lattice Tangent Structure

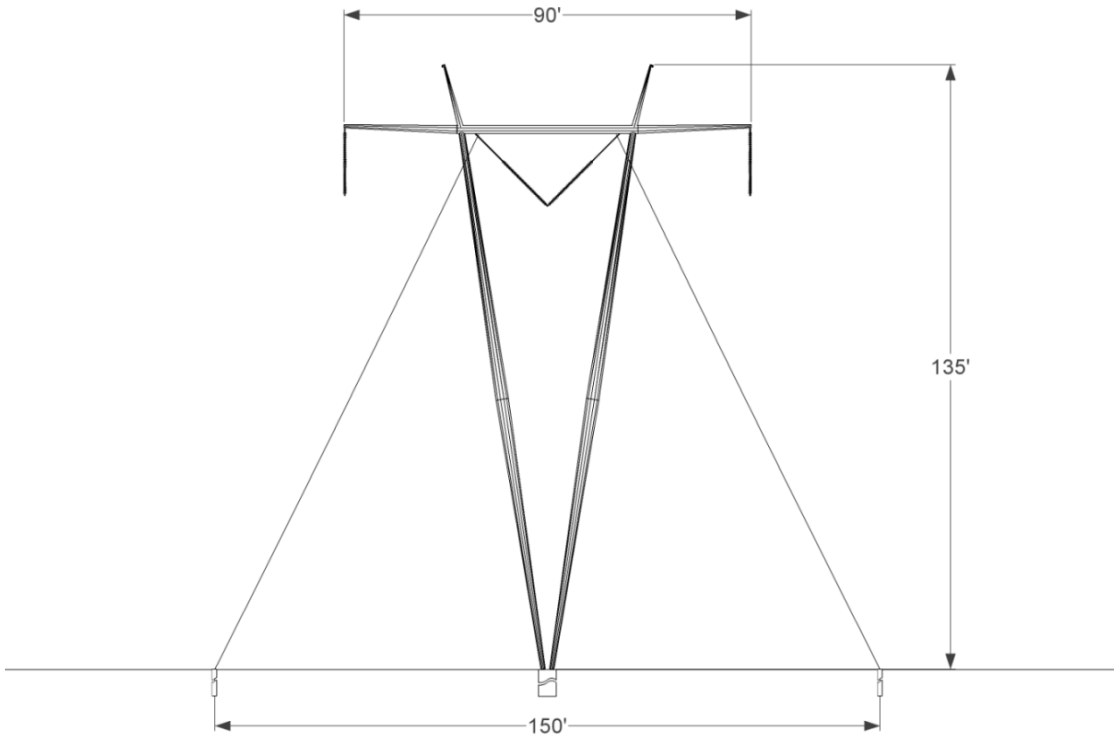

Figure 2-12. Typical AC Guyed "V" Tubular Tangent Structure

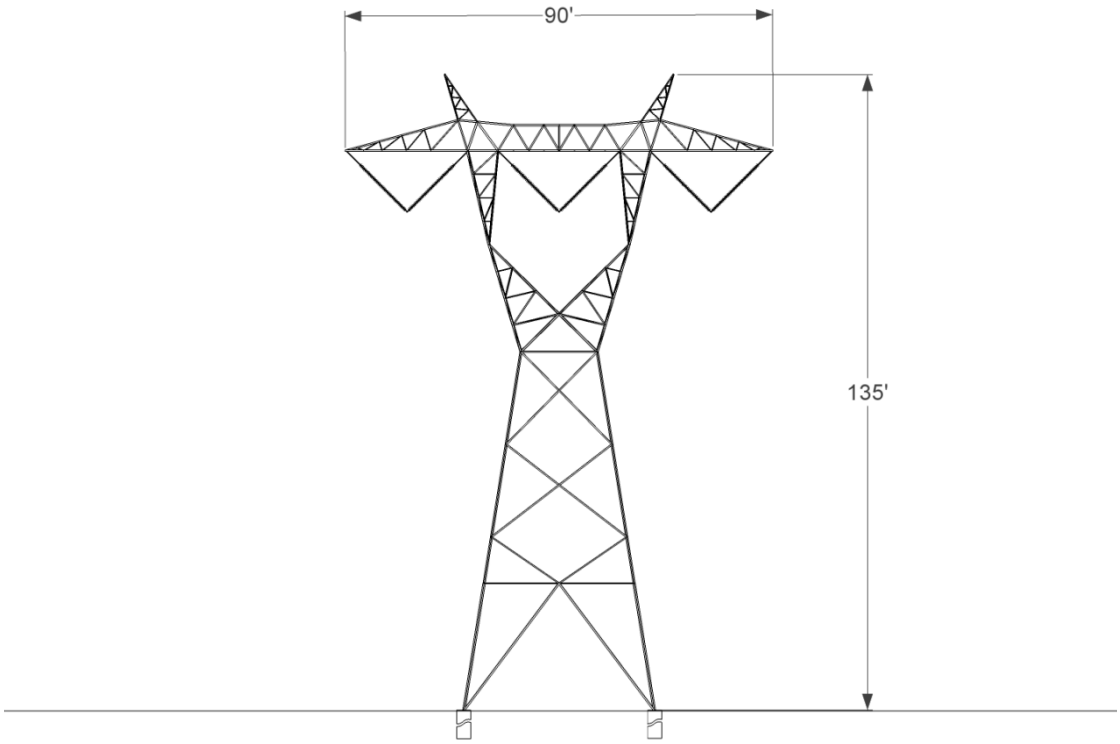

Figure 2-13. Typical AC Self-Supporting Lattice Tangent Structure

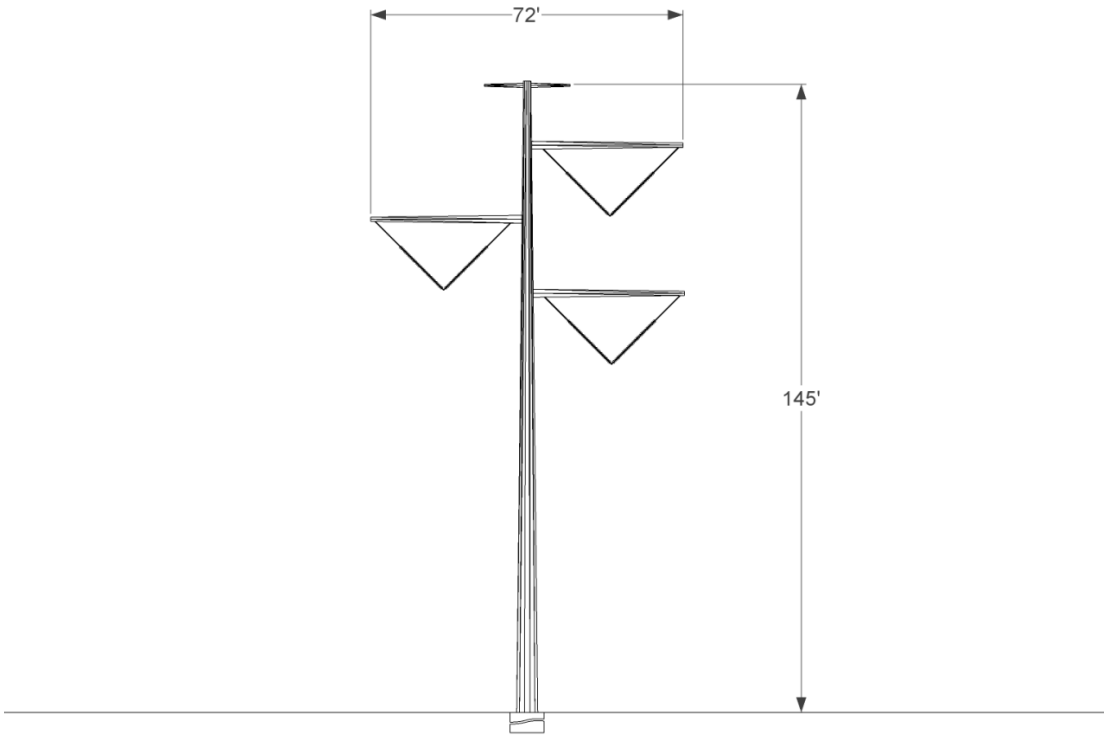

Figure 2-14. Typical AC Self-Supporting Tubular Tangent Structure

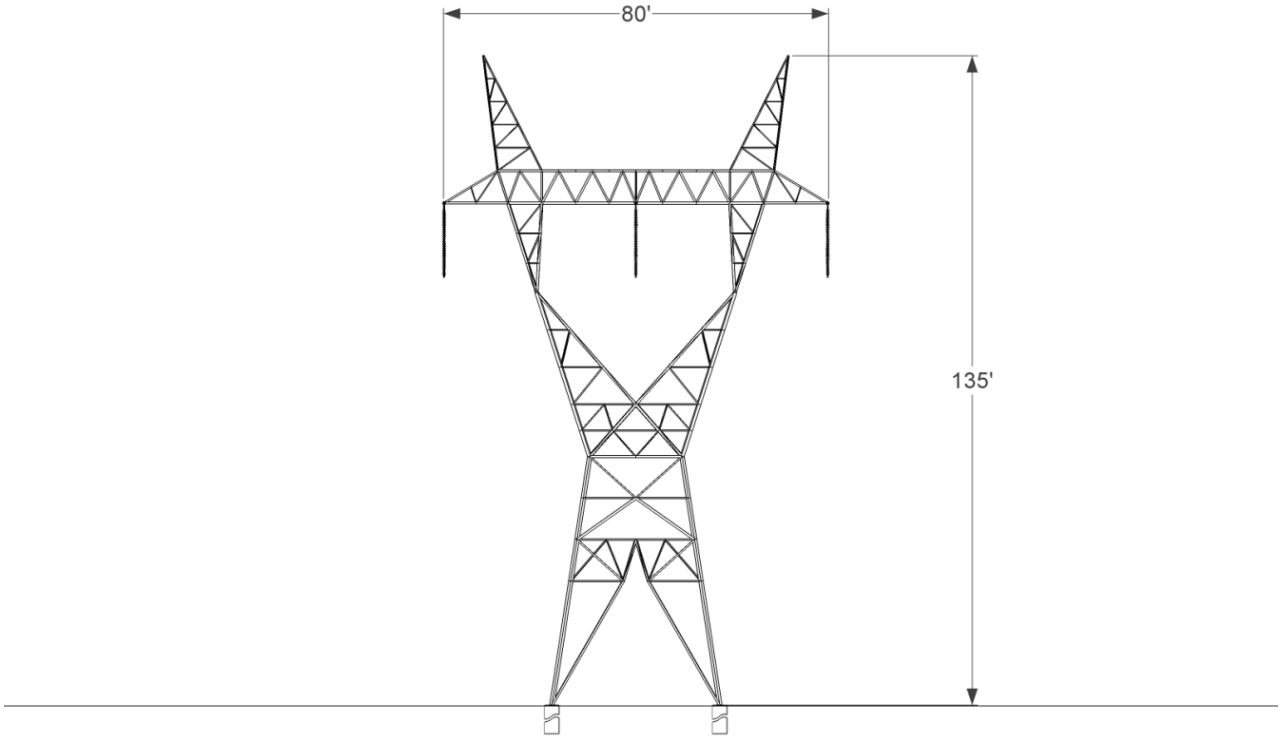

Figure 2-15. Typical AC Self-Supporting Dead-End Lattice Structure

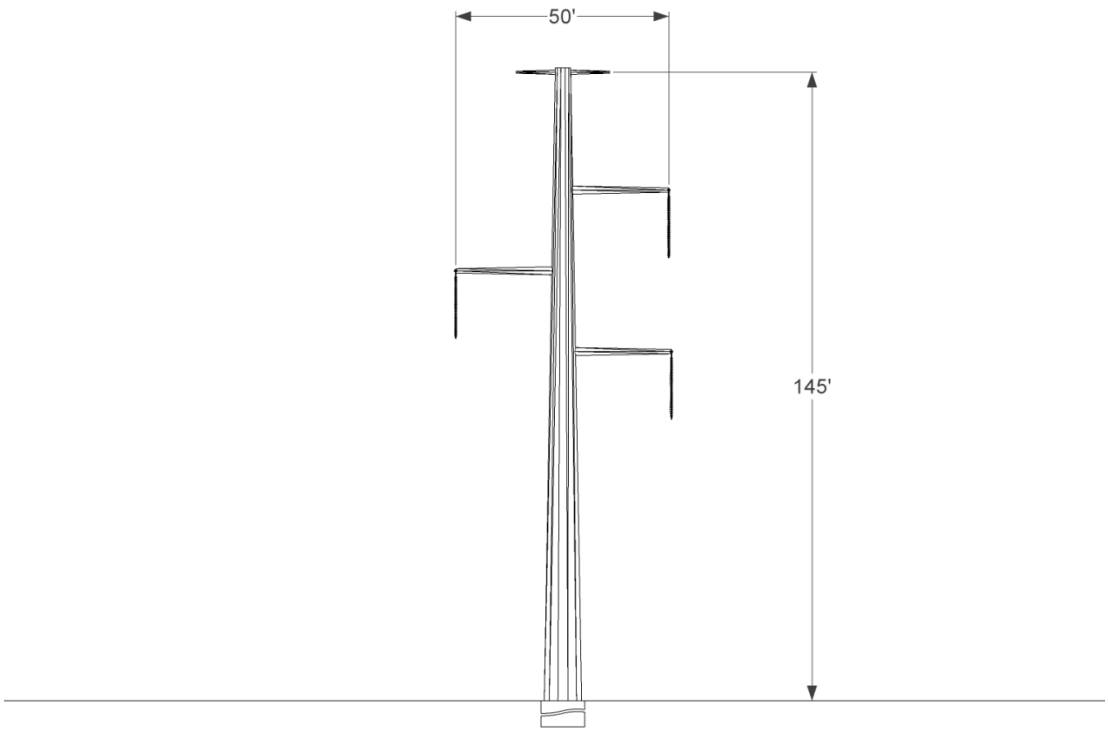

Figure 2-16. Typical AC Self-Supporting Dead-End Tubular Structure

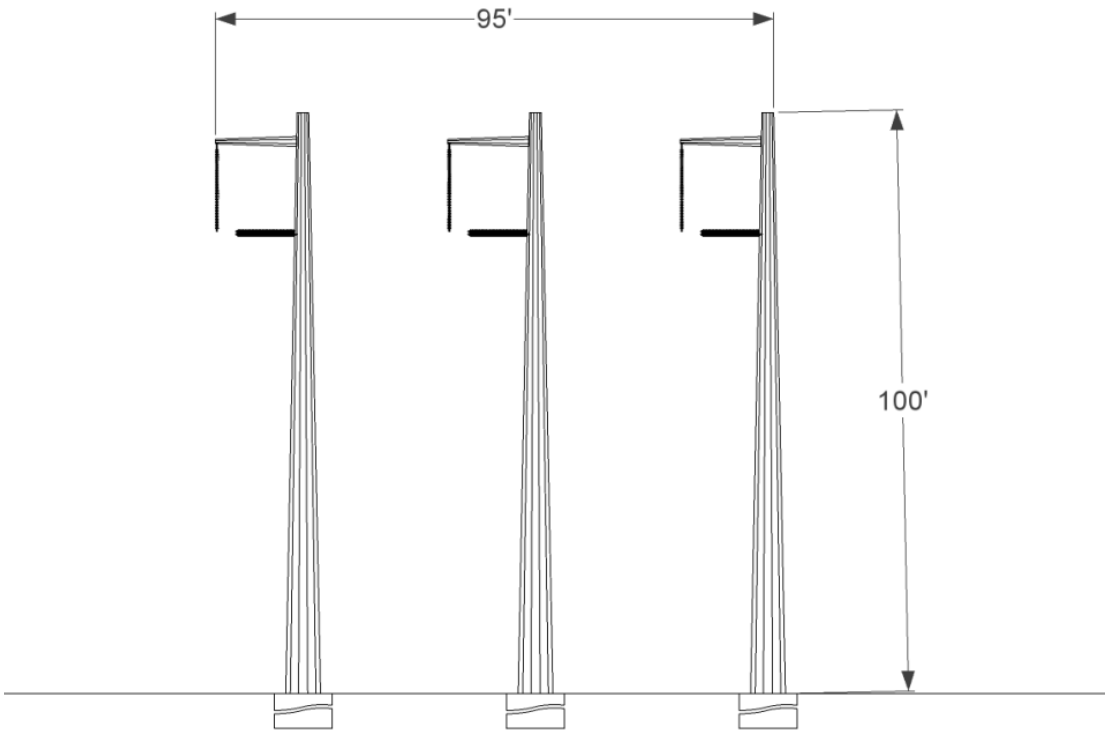

Figure 2-17. Typical AC Self-Supporting Dead-End Tubular, 3-Pole Structure

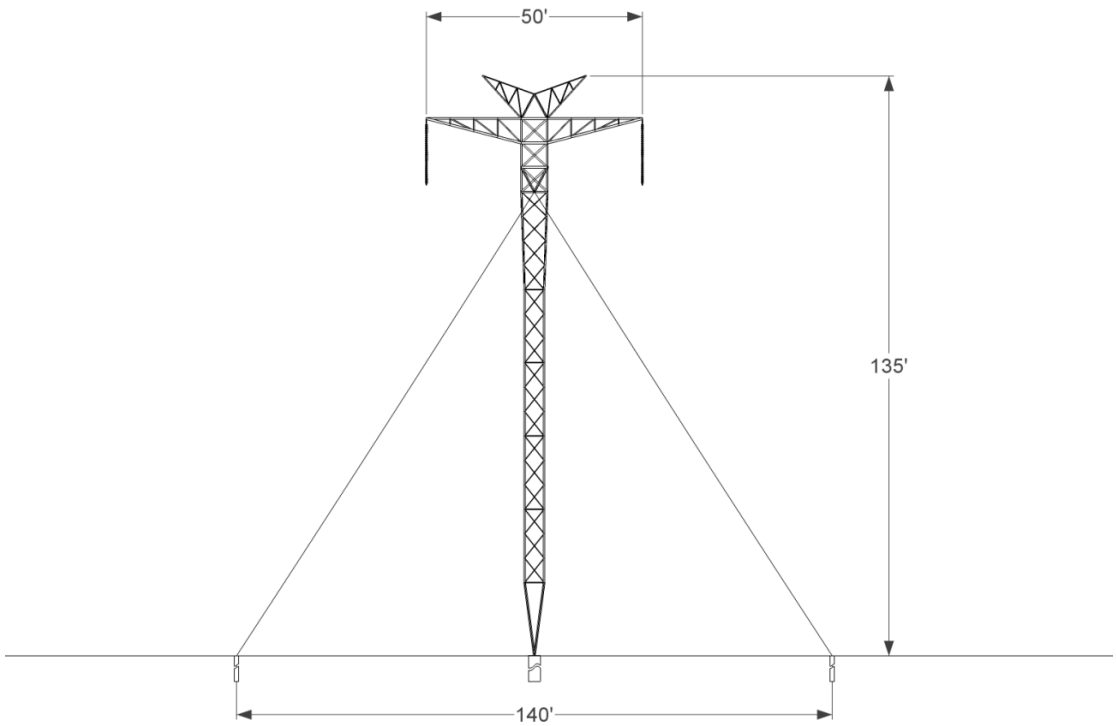

Figure 2-18. Typical DC Guyed Lattice Tangent Structure

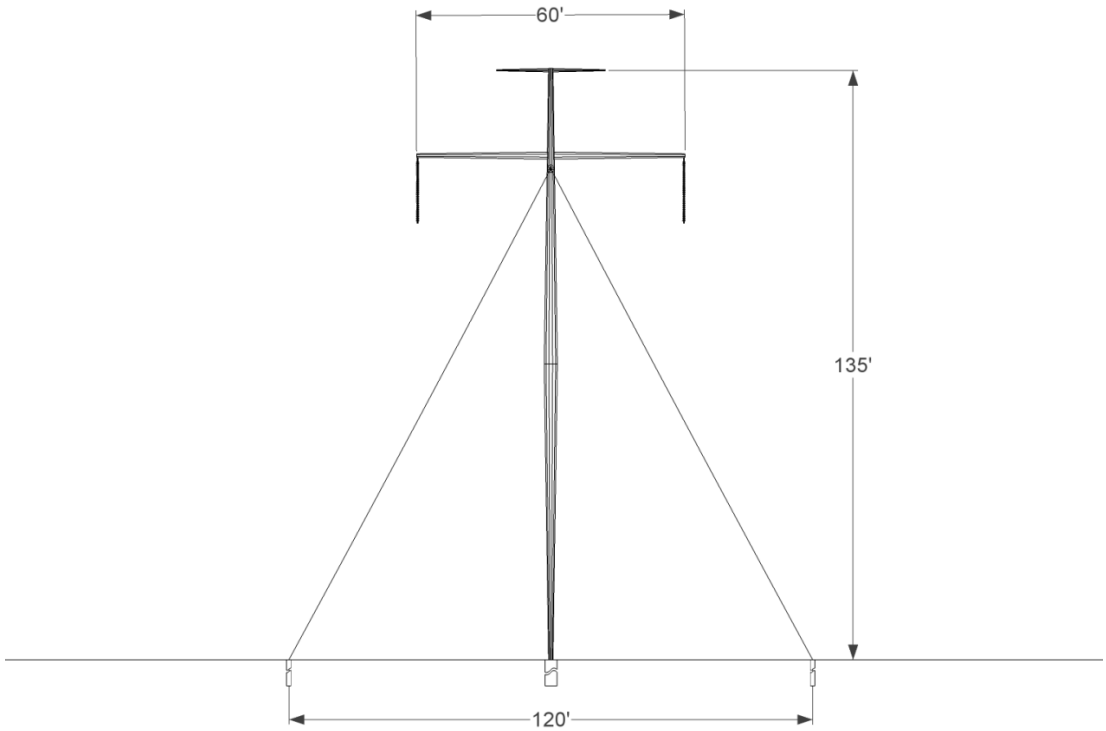

Figure 2-19. Typical DC Guyed Tubular Tangent Structure

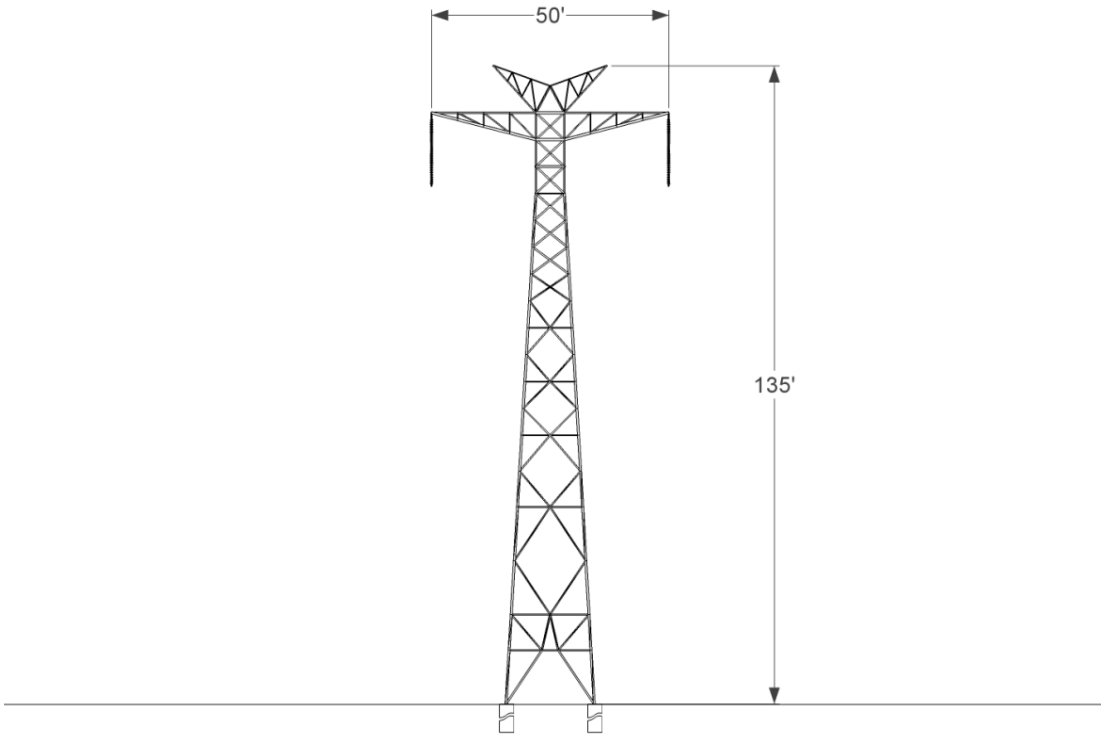

Figure 2-20. Typical DC Self-Supporting Lattice Tangent Structure

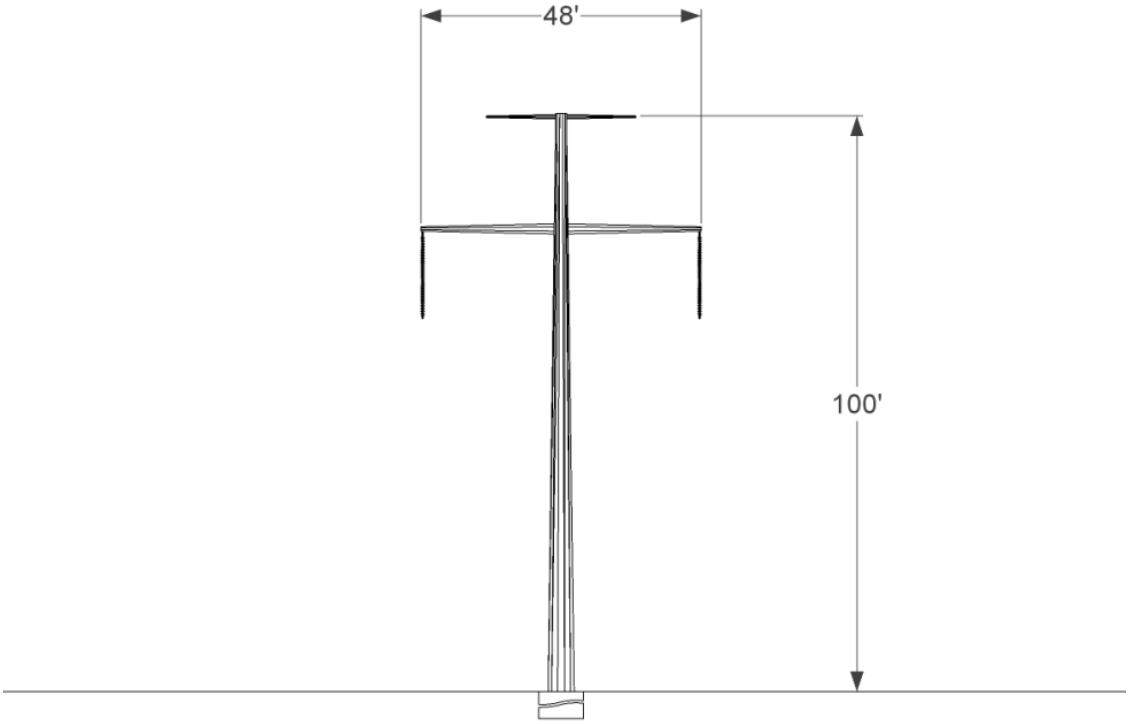

Figure 2-21. Typical DC Self-Supporting Tubular Tangent Structure

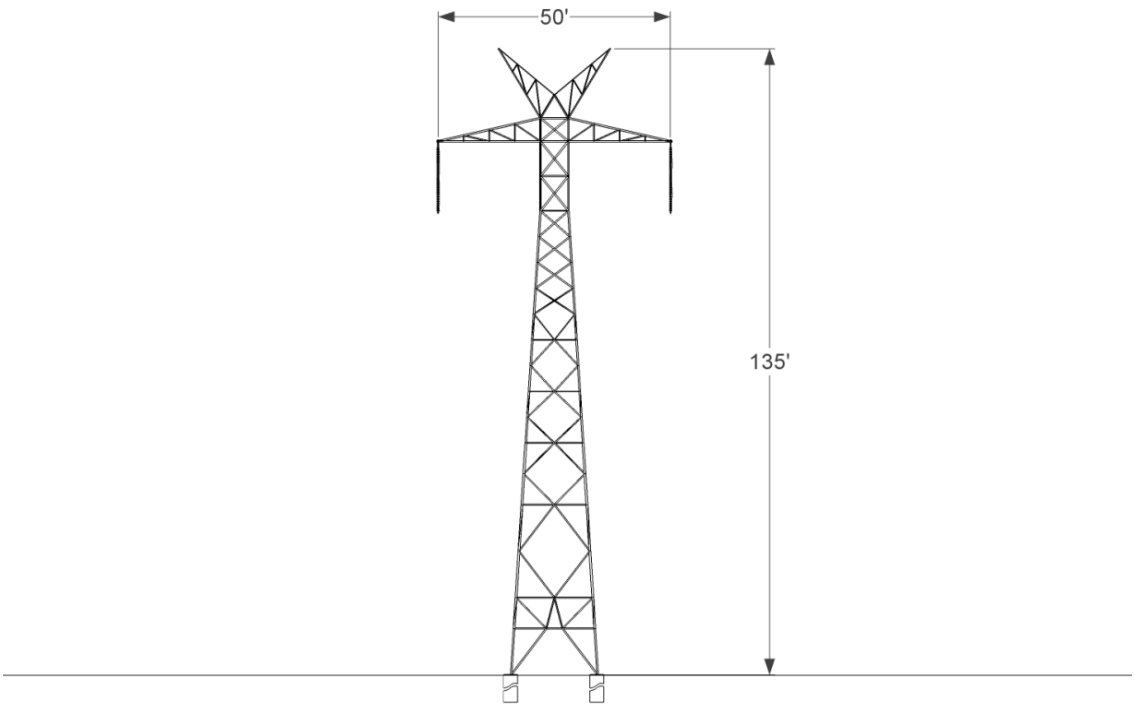

Figure 2-22. Typical DC Self-Supporting Dead-End Lattice Structure

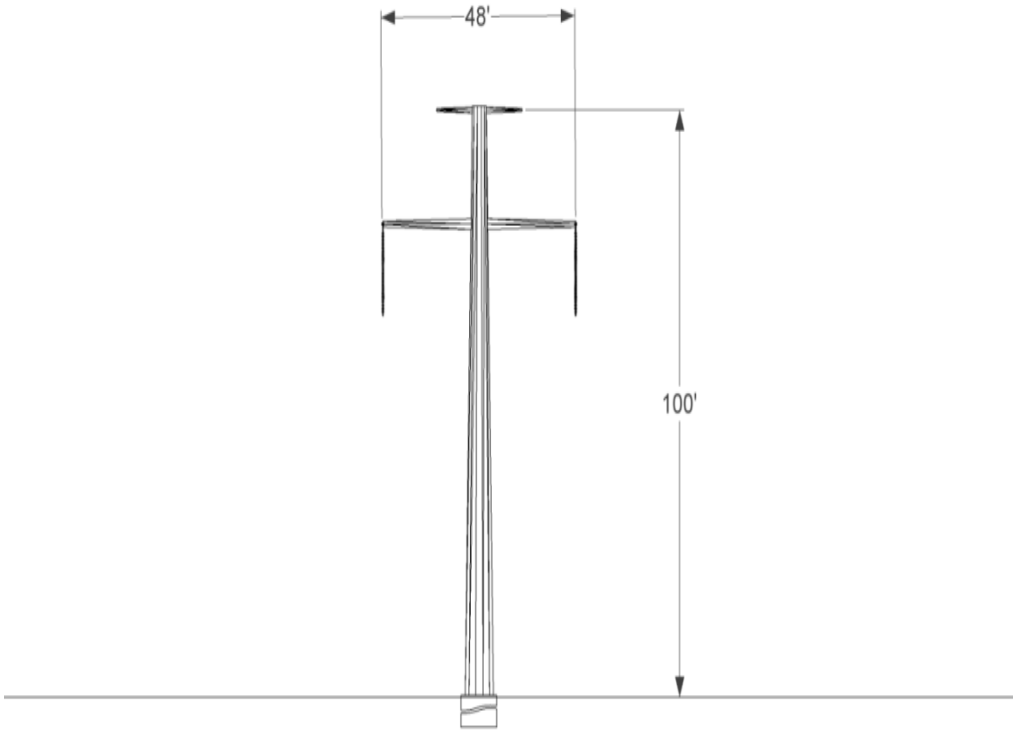

Figure 2-23. Typical DC Self-Supporting Dead-End Tubular Structure

2.4.3 Foundations

Each structure type requires specific foundations, although foundation design would be similar for either AC or DC structures. The guyed (GVL or GVT) structures would require a center pier and four anchors for the guy wires. The center pier would be cast-in-place concrete, a precast concrete foundation, or grillage foundation (a grillage consists of buried galvanized steel members designed to resist foundation loads). Drilled grouted soil, drilled grouted rock, disk, or log anchors would be used. For drilled anchors, each anchor hole would be 6 to 12 inches in diameter and range in depth from 10 to 40 feet. For disk or log anchors, typical excavations are 6 feet by 3 feet wide, and 10 feet to 15 feet deep.

Each SSL structure would require four cast-in-place drilled pier footings, each ranging from 3 to 6 feet in diameter (based on soil conditions) and 15 to 40 feet in depth. The footings would be installed by placing reinforcing steel and a structure stub into the foundation hole, positioning the stub and encasing it in concrete.

The SST structures would be installed on a single drilled pier foundation, which would typically be 6 feet in diameter; but may range from 4 to 8 feet in diameter based on soil conditions, and would be 20 to 50 feet deep.

The DEL structures require four footings installed on drilled pier foundations, which would typically be 6 feet in diameter; but may range from 4 to 8 feet in diameter based on soil conditions, and would be 20 to 50 feet deep.

The dead-end tubular structures would be installed using either one (DET) or up to three (DET3), single drilled pier foundations, which typically would be 6 feet in diameter; but may range from 8 to 12 feet in diameter based on soil conditions, and would be 20 to 50 feet deep.

2.4.4 Conductors

The conductors are the wire cables strung between transmission line structures over which the electric current flows. Conductors for the Project would be aluminum with a steel reinforced core. The aluminum carries most of the electric current, and the steel provides tensile strength to support the aluminum strands. The AC transmission line would consist of three phases for each circuit, including a bundle containing three conductors per phase.

The minimum conductor height above ground for the AC transmission line would be 30 to 35 feet, at 176 degrees Fahrenheit conductor operating temperature, based on NESC and Applicant design standards. The exact height of each structure would be governed by topography and safety requirements for conductor clearance.

The DC transmission line would use the same conductor as the AC transmission line, except that each DC structure would contain only two sets of bundled conductors. Minimum conductor height above ground for the DC transmission line would be 38 feet, based on NESC standards.

2.4.5 Insulators and Associated Hardware

Insulators, which are made of an extremely low conducting material such as porcelain, glass, or polymer, are used to suspend the conductors from each structure. They inhibit the flow of electrical current from the conductor to the ground, the structure, or another conductor. Insulator material would be selected based on electrical properties and maintenance practices, according to final Project engineering. Assemblies of insulators are designed to maintain electrical clearance between the conductors, structure, and ground. A permanent assembly of insulators, ranging from 20 to 28 feet long, would be used to position and support each of the three-conductor bundles to the structures. Insulator assemblies may be either "V" shaped or "I" shaped (vertical) for the tangent structures, and "I" shaped (horizontal) for the dead-end structures. See figures 2-11 through 2-23 for illustrations of the conductors for the proposed AC and DC structure types.

2.4.6 Overhead Groundwire and Electrodes

To protect conductors from lightning strikes, two OHGWs would be installed on the top of the structures. Current from lightning strikes would be transferred through the groundwires and structures into the ground. The groundwires would be composed of extra-high strength steel wire of approximately 0.5-inch diameter. One or both of the OHGWs would be an approximately 1-inch diameter fiber optic groundwire (OPGW), which would facilitate data transfer—required for system control and monitoring between the transmission facilities—along the fiber path.

The DC structures (Option B) may require two overhead conductors in the OHGW position for a portion of the line emanating from each of the SunZia East and Pinal Central substation terminations. These specific overhead conductors are a component of the ground return facilities required for DC operation. With this configuration, an OPGW will also be required to provide continuity of the fiber optic cable system for the entire line. The ground return conductors would then be connected to two independent ground electrode facilities, one near each end of the AC/DC converter station locations to maintain electrical current continuity during emergency conditions[1]. Each ground electrode facility would consist of a network of drilled deep earth wells (electrodes), grouted to a depth of 100 feet or more, depending upon the geological structure and electrical parameters of the area. Each site may be up to 600 acres in size (although other uses may be allowed within the site). Each well would be electrically interconnected to a small control building via buried low voltage underground cables, and each well and the electrode line would be continuously monitored via a telecommunications link that would use fiber optic or fixed radio communications equipment. Ground current would be effectively shared through the buried electrode network interconnecting the wells, to create a very low resistance earth connection by distributing the ground current over a large area. Surface access to the wells would be via utility access vault type arrangements to prevent any public access to the well connections or the electrode components.

[1] The ground electrodes provide an earth return path for the electrical current when one set of the DC current carrying circuits, also known as a monopole circuit, of the DC line is out of service. These conditions are most often the result of an unexpected outage of one monopole circuit, which would result in the electrical current flowing through the earth for a short period of time (typically 10 minutes to less than an hour).

2.4.7 Fiber Optic Regeneration Station

As the data signal passes through the optical fibers in the groundwire, the signal degrades with distance. Fiber optic regeneration stations are required to amplify the system control and monitoring signals carried over the OPGW attached to the transmission structures. Sites for fiber optic regeneration stations would be located within the proposed substations at approximately 75-mile intervals, and at other remote sites located along the transmission line route approximately halfway between each substation. Locations of regeneration sites would be identified in the final POD. The remote regeneration sites would be adjacent to the proposed transmission lines and within the right-of-way, at locations near existing low-voltage electric distribution lines, and easily accessible by vehicle. Typically, a separate permanent access spur road, up to 12 feet wide, would be located within the transmission line right-of-way as required for maintenance purposes for each site. Permanent access roads built for the transmission lines would be used to the extent practical. An extension of a distribution line would be needed to service each facility.

The remote regeneration sites would typically be in a fenced area of up to 100 feet by 100 feet, with building dimensions 12 feet wide by 32 feet long by 9 feet tall. The OPGW cable supported on the transmission structures would be routed in and out of the regeneration site building from the nearest transmission structure, either underground or overhead, along two separate paths. Electronic equipment that is required to support the fiber optic cable installation would be located inside the building. At each remote site, an emergency diesel and/or propane generator would be installed to provide backup power should an outage of the local electric distribution supply system occur.

2.4.8 Substations

Several substations would be associated with the proposed Project, constructed on private or state lands, and therefore not included in the BLM right-of-way grant. The size of each substation is dependent on whether an AC only or an AC/DC facility is installed at the site. The parcel would include the secure, fenced area containing the electrical equipment, plus sufficient area surrounding the substation components for placement of transmission structures entering and exiting the substation, and to provide setbacks to buffer neighboring lands. The maximum height of structures in the substation would be approximately 170 feet. The substation yards would be open air and include equipment such as transformers, circuit breakers, disconnect switches, lightning/surge arrestors, reactors, capacitors, bus (conductor) structures, and a microwave antenna. Typically, substation components would be surrounded by an 8-foot-high chain-link fence topped with barbed wire. Typical design characteristics for the substations are listed in Table 2-5 and may vary subject to local regulations. Estimated areas of ground disturbance for each substation are listed in Table 2-6.

Table 2-5. Typical Design Characteristics of a 500 kV Substation	
Equipment	• Transmission line take-off structures • Power circuit breakers • Power transformers • Switching equipment • Bus work or bus conductor • Control house • Microwave antenna • Current limiting reactors • Capacitor banks
Access road • Width • Road surface • Grading	• Minimum 24 feet wide, based on site-specific conditions (a maximum of 28 feet, including drainage/berms on each side) • Gravel • Heavy road base to support larger equipment
Fire protection facilities	• Fire-wall barriers for protection from transformers
Substation/Reactive compensation grounding	• Copper wire will be used to facilitate personnel ground protection
Land permanently disturbed[1]	• Each substation site: 35 to 85 acres
Land temporarily disturbed	• Each substation site: 5 to 20 acres (in addition to permanent disturbance)
Voltage	• Multiple voltages; can change voltage from 500 kV to lower voltages
[1] May include areas for transmission structures outside fenced areas shown in figures 2-24 through 2-27 and 2-30.	

As proposed, AC transmission lines would interconnect the proposed SunZia East Substation at the eastern terminus with the Pinal Central Substation at the western terminus. The SunZia East Substation would be located in Lincoln County, New Mexico, near US Route 54 and County Road A035. The Pinal Central Substation has been permitted and will be constructed by SRP at a location in Pinal County, Arizona, near US Route 287 and US Route 87. The Project may include one or more of the following three intermediate substations:

- Midpoint Substation would be located in Luna County, New Mexico, near Deming
- Lordsburg Substation would be located in Hidalgo County, New Mexico, near the existing Hidalgo Substation
- Willow-500 kV Substation would be located in Graham County, Arizona, near US Route 191 and the existing TEP 345 kV transmission lines[1]

The sequence and timing for construction of intermediate substations would be subject to future requests for interconnection to the Project facilities. The DC transmission line would not include interconnections with these intermediate substations, but would require AC/DC converter stations in the substation at each terminus. Figures 2-24 through 2-28 illustrate the substation layouts for the proposed substations. An elevation view of a typical 500 kV substation is provided on Figure 2-29, and a typical 500 kV DC converter station is shown on Figure 2-30.

Table 2-6. Substations: Estimated Temporary and Permanent Ground Disturbance (in acres)

Substations	Option A – Temp	Option A – Perm	Option B – Temp	Option B – Perm
SunZia East	15	45	20	85
Willow-500 kV	5	40	5	35

[1] The Willow 345 kV Substation has been permitted, and the site is located west of the proposed SunZia Willow-500 kV Substation.

Table 2-6. Substations: Estimated Temporary and Permanent Ground Disturbance (in acres)				
Substations	**Option A – Temp**	**Option A – Perm**	**Option B – Temp**	**Option B – Perm**
Midpoint	5	60	5	60
Lordsburg	5	40	5	35
Pinal Central[1]	5	0	10	45
Subtotal	**35**	**185**	**45**	**260**
Total Disturbance	**220**		**305**	
[1]Disturbance areas indicated are the portion within the Pinal Central Substation for SunZia the transmission line facilities (see Figure 2-28)				

2.4.9 Preconstruction Activities

Following are descriptions of preconstruction activities for the Project: right-of-way land acquisition, geotechnical investigations, and centerline survey.

2.4.9.1 Right-of-Way and Land Acquisition

New permanent and temporary land rights (e.g., right-of-way grant, easements, license agreement, and fee simple) are required for Project facilities, such as the transmission line corridor, access roads, and temporary work sites. Where the proposed transmission lines would parallel an existing transmission line, the right-of-way would be adjacent to the existing right-of-way to the extent feasible. The right-of-way width must be sufficient to accommodate "conductor blowout" (the swinging of the conductor midway between structures) due to wind, as well as maintenance clearances at the structure sites.

The Applicant filed a preliminary right-of-way application with the BLM in September 2008, for a major right-of-way for the transmission lines. The duration of the right-of-way would be 50 years, and a width of up to 1,000 feet. The terrain, separation criteria, and final design will determine the corridor centerline and total width of the right-of-way. Typically, each line will require 200 feet within a 400-foot-wide right-of-way for the two proposed transmission lines. Once the BLM has issued a ROD, the right-of-way application would be finalized with Project design details and right-of-way width (see Figure 2-9 for a typical right-of-way configuration).

Additional right-of-way may be required in areas where the proposed transmission lines would turn at a sharp angle. In some areas, a narrower right-of-way may be required due to certain site conditions or constraints. In these locations, the right-of-way could be as narrow as 330 feet for limited distances. Access roads may be located outside of the transmission line right-of-way where required, due to steep terrain or other restrictive site conditions. Access roads would be identified in the POD and approved by the BLM before construction. Additional permits would be required for access roads located outside of the Project right-of-way according to state and local regulations. Access roads located outside of the right-of-way on federal lands may require site-specific NEPA analysis or other permits. Areas that are used temporarily (e.g., roads, staging areas, batch plants) may require short-term rights-of-way.

Sites for substations will be purchased in fee, leased with a long-term land lease, or secured with a right of way, depending on whether the site is on state or private land.

2.4.9.2 Geotechnical Investigation

The purpose of the geotechnical investigation is to collect information regarding subsurface stability, used in the final design of each transmission structure and foundation. This activity helps to ensure the system is designed and constructed to be safe, reliable, and cost efficient, and can reduce the overall environmental disturbance during initial build and over the life of the Project. The geotechnical investigation would consist of the drilling and sampling of soils to a typical depth of 30 to 40 feet below the existing ground; however, borehole depth may exceed 50 feet, depending on soil conditions. The boreholes would have a diameter of approximately 8 inches and would be backfilled with auger cuttings and on-site soils. No new road construction or blading would be required for the investigation. Surface disturbance would be limited to the actual tracks left by the drill rig and support vehicles within the work areas, and along overland access routes.

Helicopter-transported drill rigs may be used for geotechnical exploration in areas where existing roads do not provide adequate access or where overland travel is expressly prohibited. Geophysical exploration techniques may be employed in areas where drilling is not practical, to assist in subsurface characterization, and may use instrumentation combined with surficial actuation to identify subsurface soil and rock stratification.

2.4.9.3 Centerline Survey

If an action alternative is approved in the ROD, an engineering survey would then be completed, which would involve verifying and staking the centerline of the transmission line route, structure center hubs, access roads (where needed), spur roads to structure sites, and temporary work areas. The centerline may be adjusted to accommodate engineering requirements. Some engineering survey activities may begin as early as 2 years prior to the start of construction. Required cultural, paleontological, and biological resource surveys may begin once certain survey information is available.

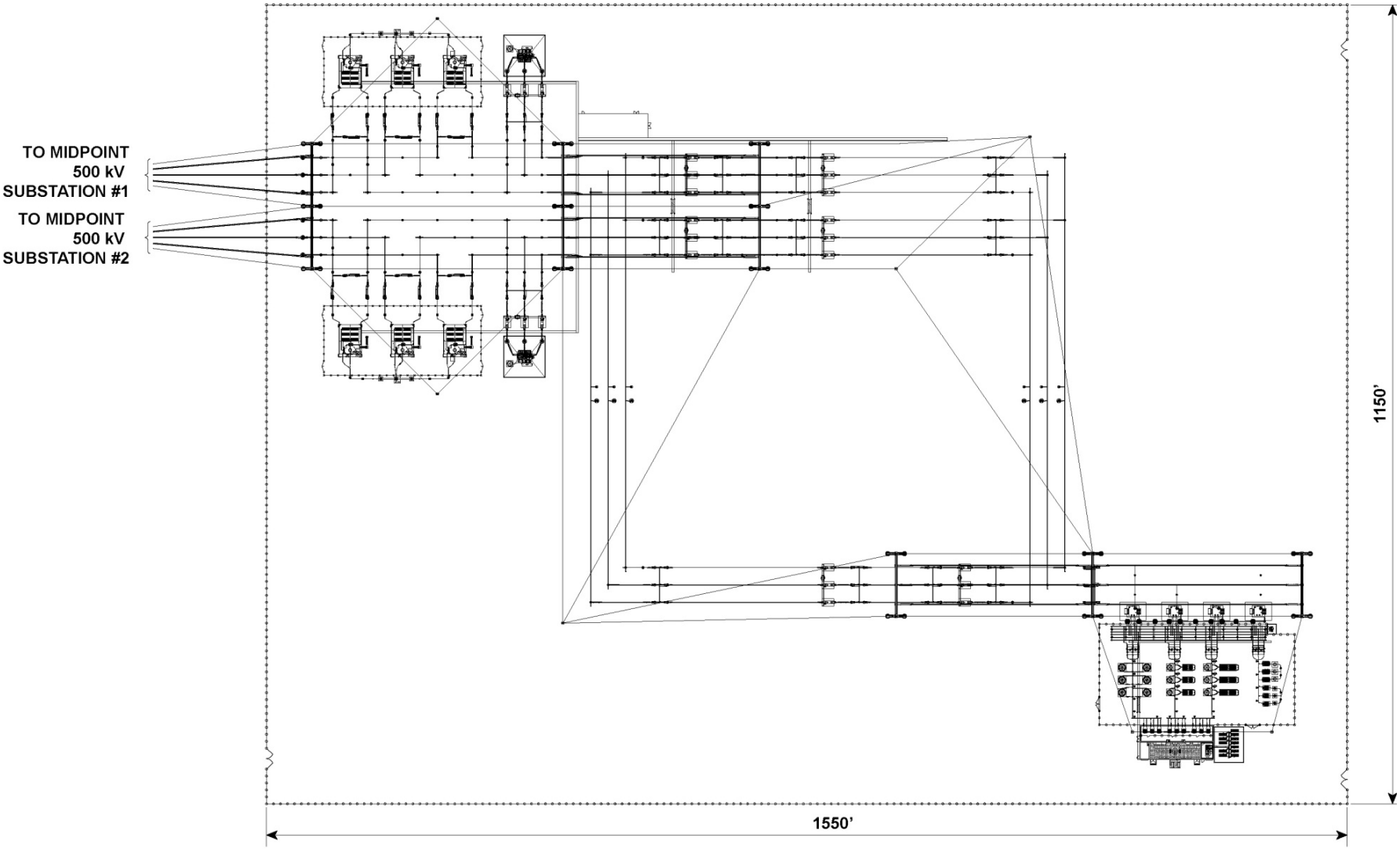

Figure 2-24. Proposed Substation Layout: SunZia East

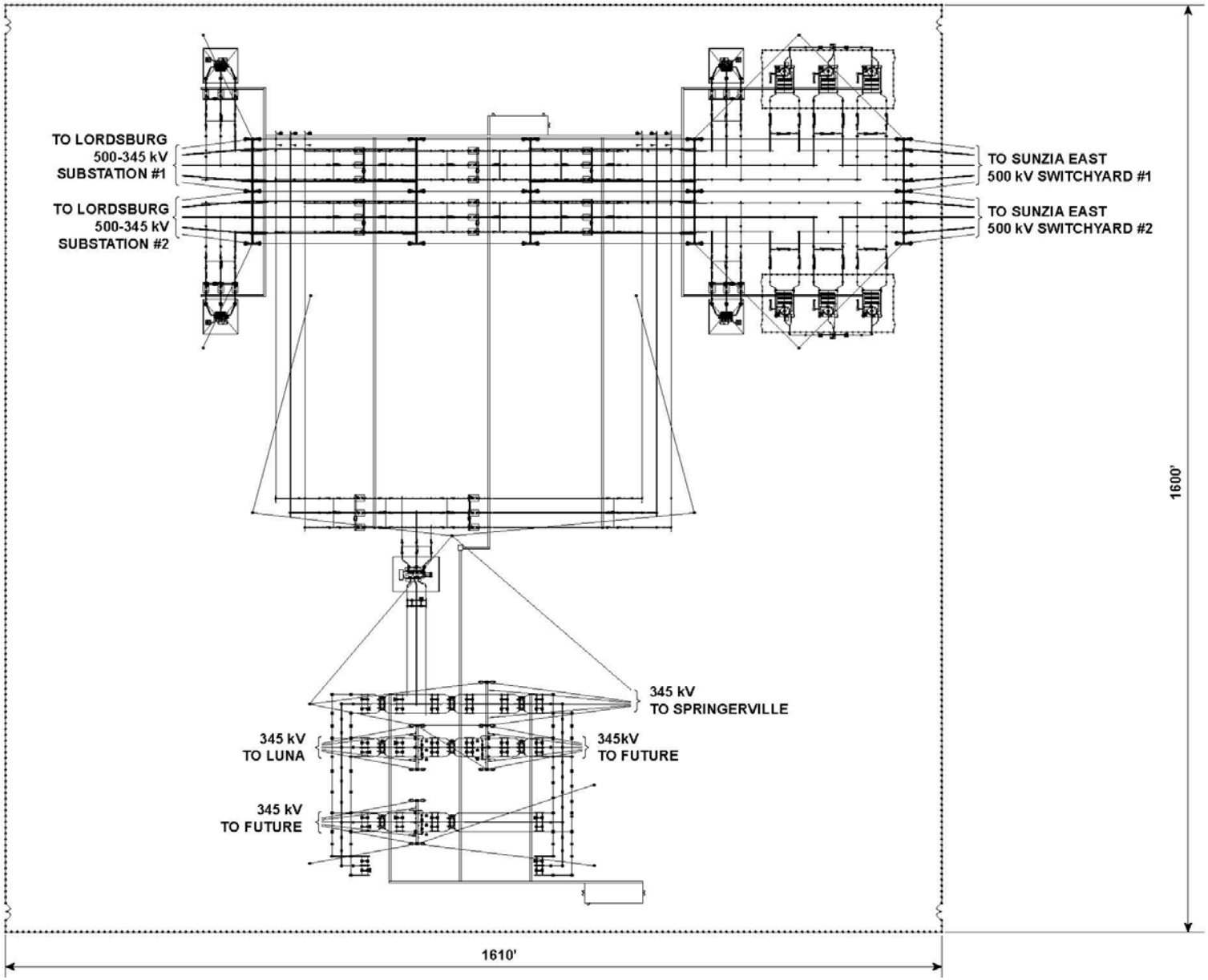

Figure 2-25. Proposed Substation Layout: Midpoint

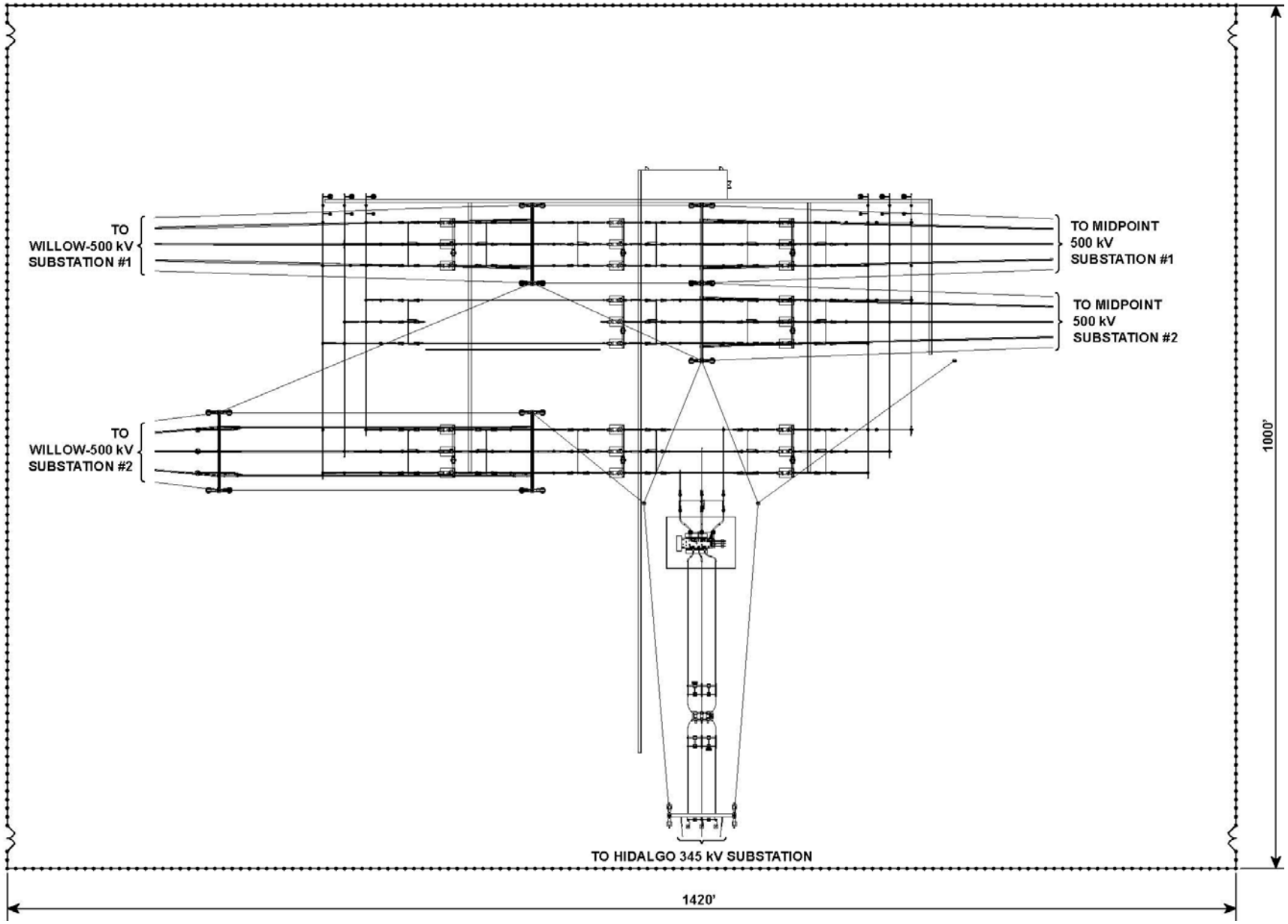

Figure 2-26. Proposed Substation Layout: Lordsburg

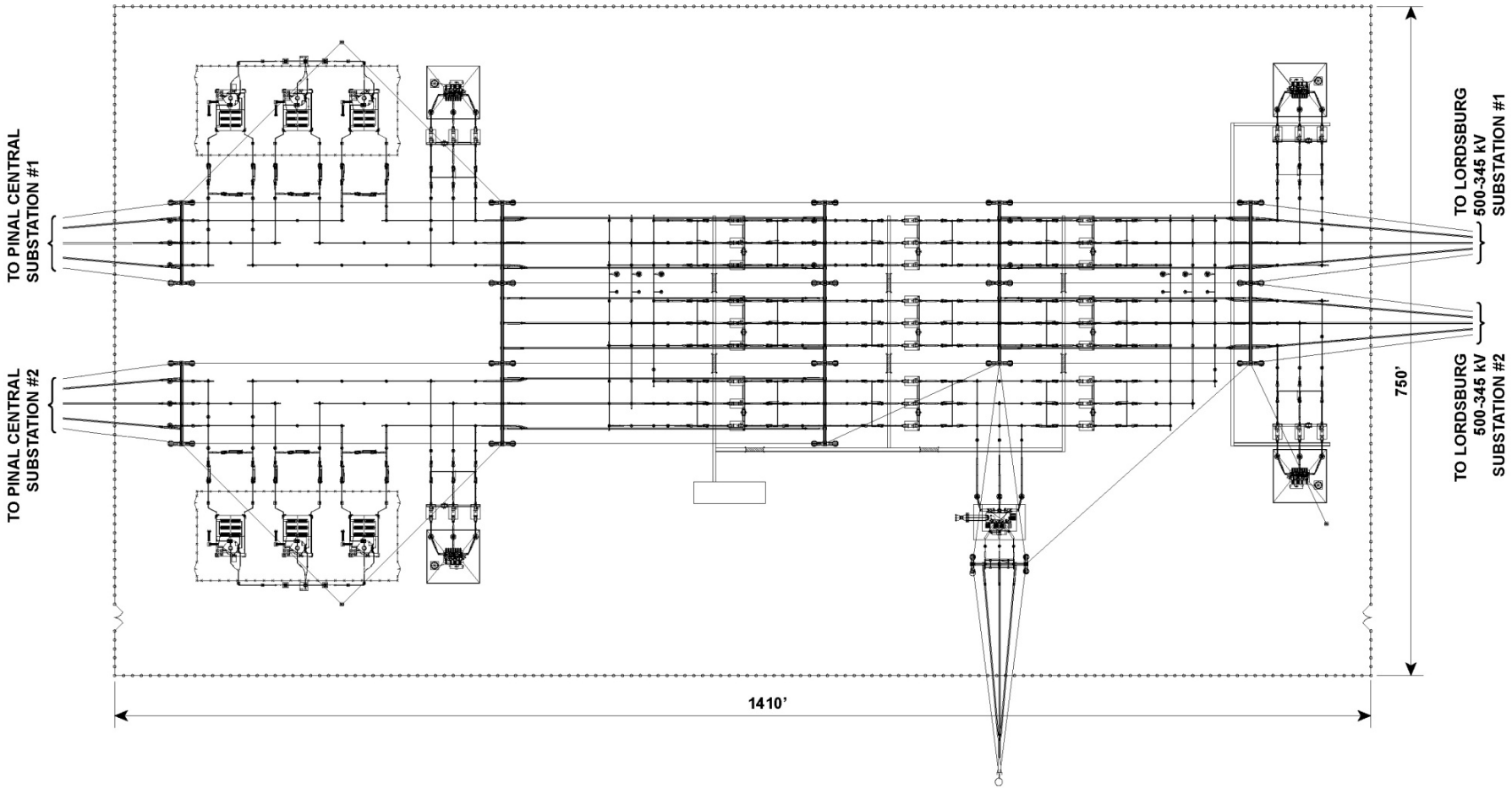

Figure 2-27. Proposed Substation Layout: Willow-500 kV

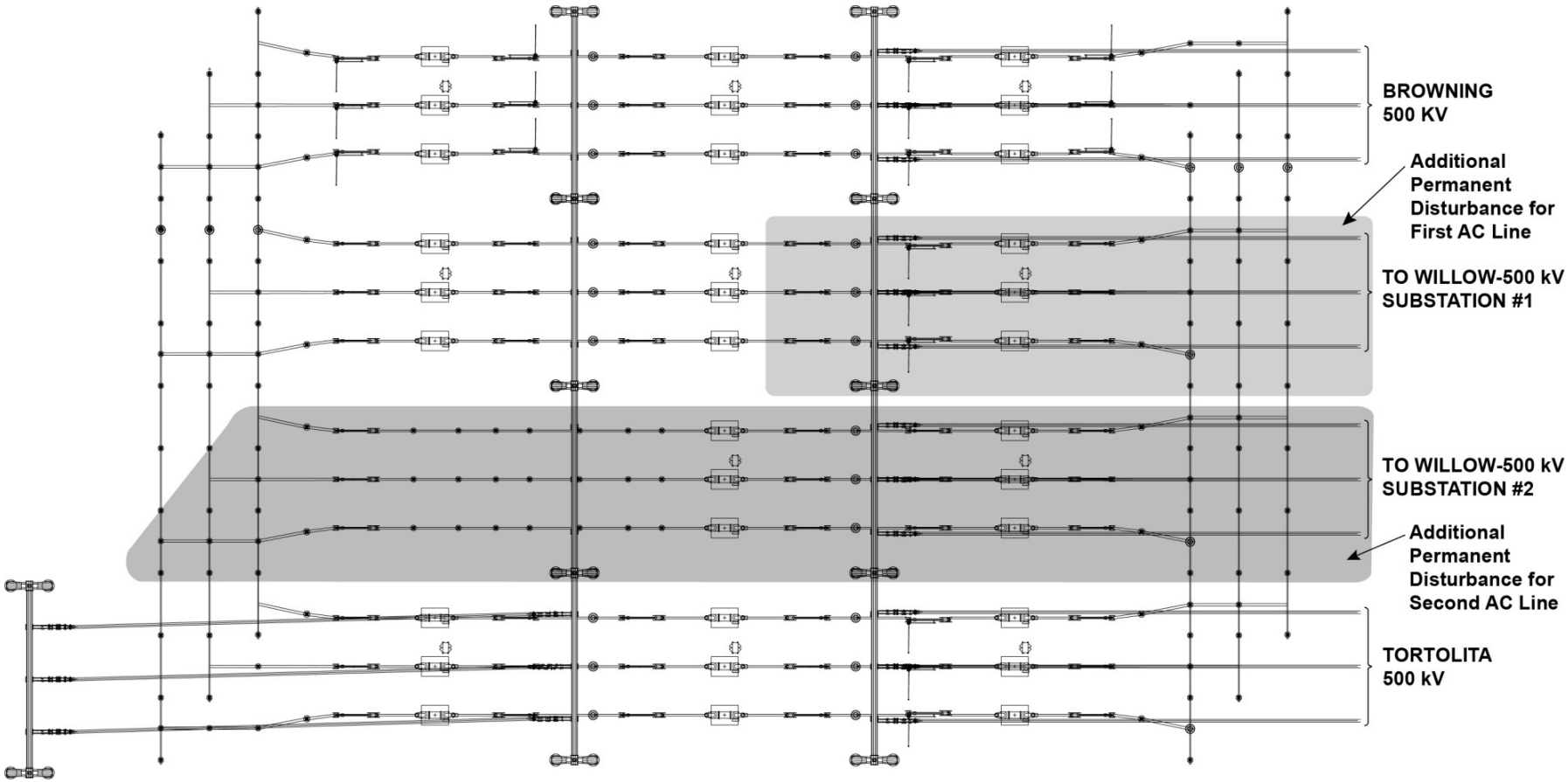

Figure 2-28. Proposed Expansion: Pinal Central Substation

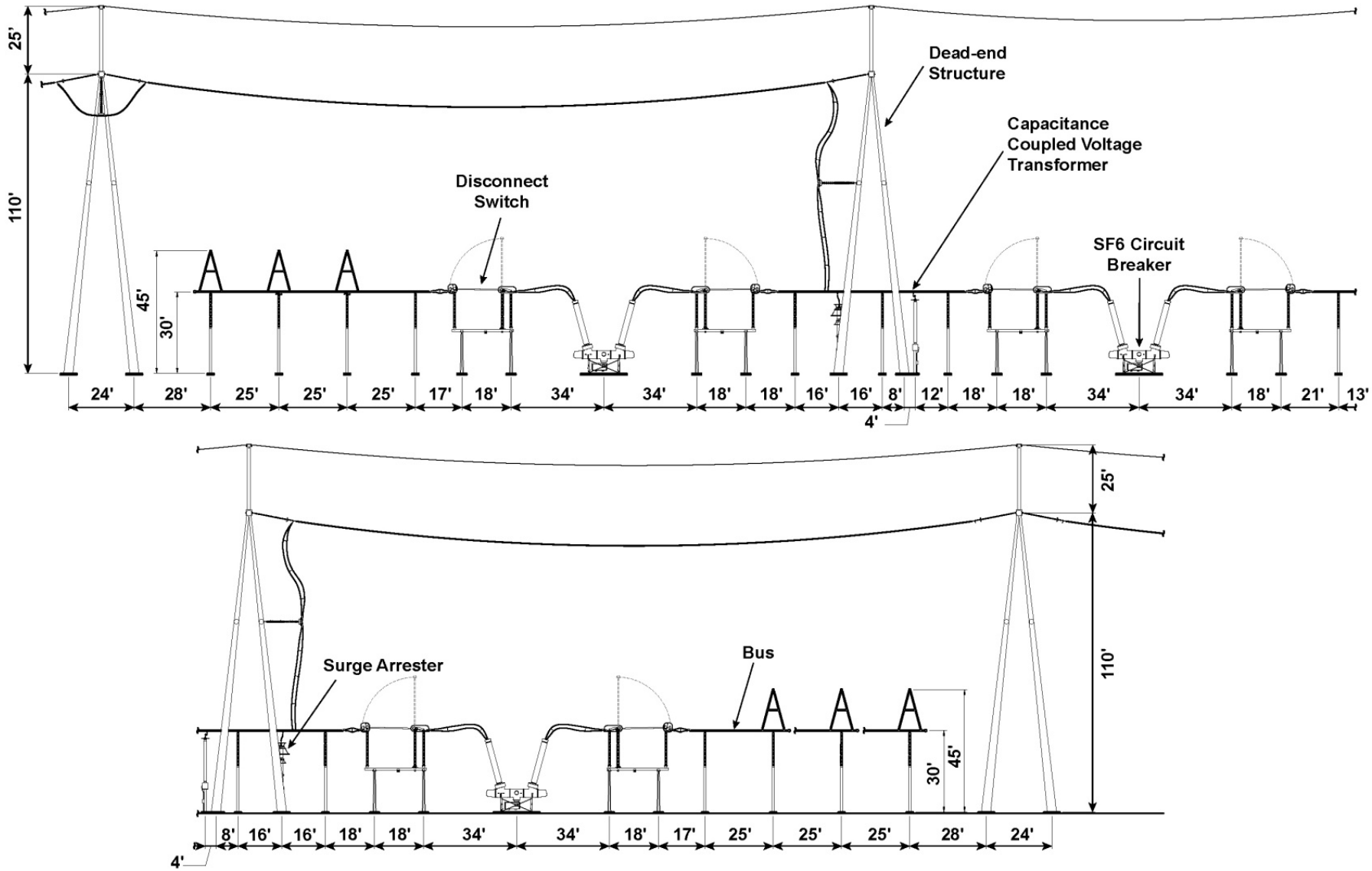

Figure 2-29. Typical 500 kV Substation Schematic – Elevation View

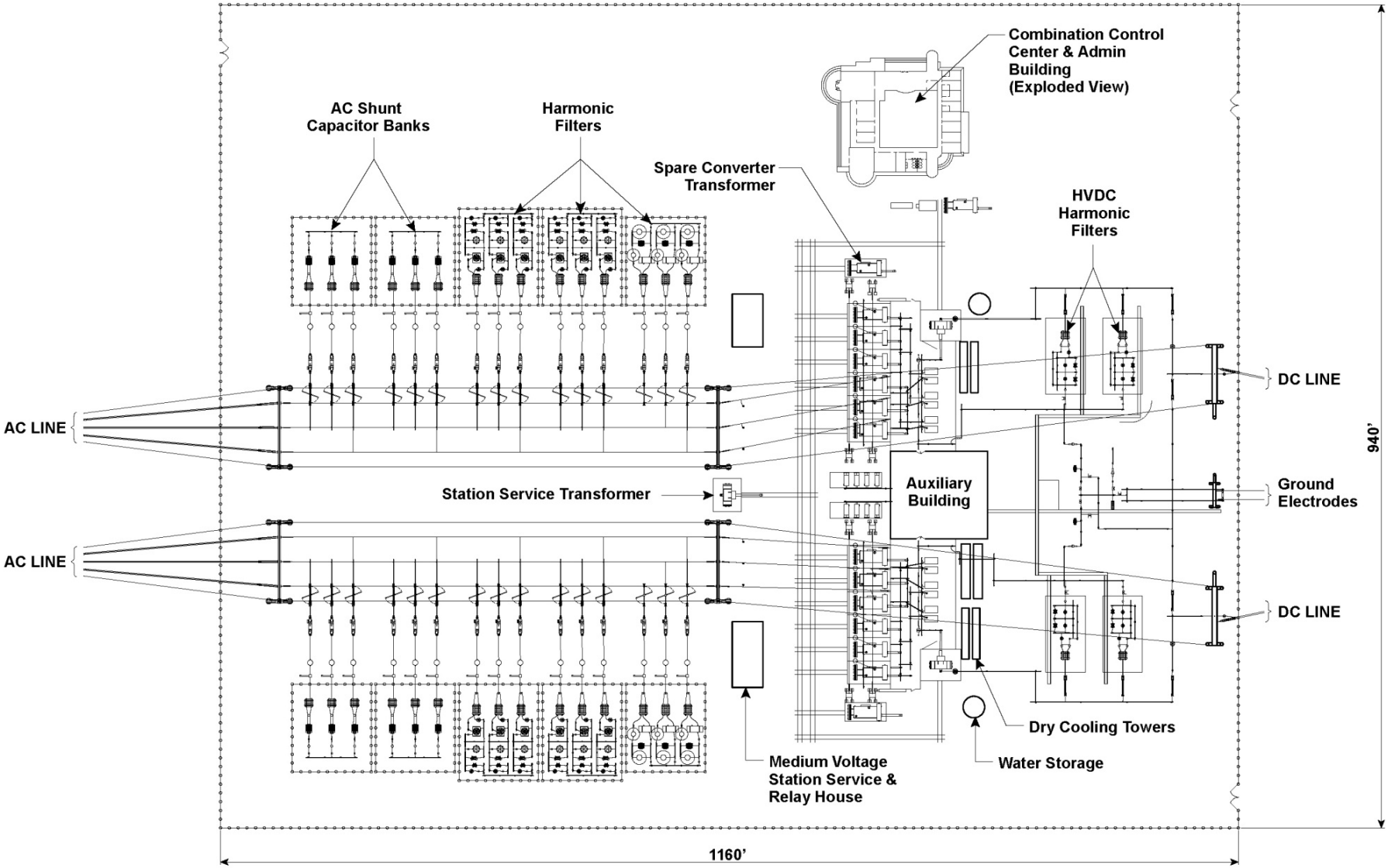

Figure 2-30. Typical 500 kV DC Converter Station.

2.4.10 Construction Activities

Construction activities would be similar regardless of design option (AC or DC). Construction specifications could be refined during detailed engineering; however, these refinements would be within the limits of the detailed analysis addressed by this EIS. Any changes to Project design or construction would be reflected in the final POD, as necessary. The POD will also include a list of those mitigation measures to which the Applicant has committed to protect the environment during Project construction and operation (see Section 2.4.12). The design, construction, and operation of the Project would meet or exceed the requirements of the NESC, U.S. Department of Labor, Occupational Safety and Health Administration (OSHA) Standards, and the Applicant's requirements for safety and protection of landowners and their property.

2.4.10.1 Access Roads

Roads enable access to the right-of-way and structure sites for both construction and long-term maintenance of the transmission lines. To limit the amount of new road construction for the Project, existing paved and unpaved access roads would be used, to the extent practicable, for the transportation of materials and equipment from the storage yards to the areas where they would be needed along the transmission line right-of-way. Because access roads must be sufficient to bear the weight and endure heavy construction vehicle use, existing access roads may need to be upgraded to meet construction requirements. Affected private landowners and agencies would be consulted before road upgrades or construction begins. Relevant road construction criteria of the affected agencies and landowners, including BLM requirements, will be outlined in the POD. The POD will also document specific plans for the construction, rehabilitation, and/or maintenance of the roads, including general locations of access roads and construction methods (i.e., overland drive and crush, cut and clear, etc.), based on site-specific conditions.

The typical transmission tower span would be 1,200 to 1,600 feet; based on the use of either a guyed-V structure or the SSL structure. In order to limit the amount of new road construction for the Project, existing roads within 700 feet of the Project representative centerline are proposed to be used for access to the Project right-of-way and Project facilities, where practicable. Where existing roads could be used for construction and operation purposes, only spur roads to Project or structure work areas may be needed. Beyond 700 feet from the Project representative centerline, constructing a new road from structure-to-structure would typically result in less ground disturbance than building spur roads from existing roads to each Project or structure work area. The number of new spur roads would be held to a minimum, consistent with their intended use (e.g., structure construction or conductor stringing and tensioning). Some existing roads could require upgrading to meet BLM standards for road construction. All existing roads would be left in a condition equal to or better than their condition prior to construction, in accordance with BLM, state, and/or local road standards or private landowner agreements.

Where new roads are required to meet the access needs of the Project, it is anticipated that a single new road would be constructed to serve both 500 kV facilities (Figure 2-31). In locations of steep or rugged terrain, two separate access roads may be required to accommodate construction of the two parallel transmission lines. New roads may be built as either temporary

or permanent access. Where new roads are required for construction purposes only, or to access temporary work areas (e.g., wire pulling and tensioning sites, concrete batch plants, etc.), access roads may be built for temporary use. Temporary roads serve the needs for Project access during the construction phase, but are not anticipated to be necessary for operations or decommissioning purposes. Upon completion of construction activities, temporary access roads would be reclaimed according to the procedures specified in the Final POD. Where new roads are required for construction and operation purposes, or where landowners or land-management agencies require, access roads would be constructed for permanent use.

All access roads (new, improved, or spur), temporary or permanent, would typically be constructed with a travel-surface width of 20 feet, and 2-foot berms and/or drainage ditches on both sides of the travel surface, for a total roadway width of 24 feet. In steep terrain, total disturbance would likely exceed 24 feet (e.g., up to 50 feet for a 2:1 slope), due to cut and fill conditions according to design standards (Figure 2-32). In addition, roads may be routed around specific areas due to topographical constraints or to avoid sensitive resources. Helicopters may be used for wire stringing, and in some locations structure placement, in areas where there are environmental constraints, terrain restrictions, or where it is economically practical.

To reduce the severity of Project disturbance where operations access will be required, overland road construction methods (i.e., overland drive and crush; overland cut and clear) may be implemented where feasible. Overland drive and crush is defined as vehicular travel to the Project right-of-way and/or facilities without significantly modifying the landscape; vegetation is crushed but not cropped, thereby minimizing disturbance to root mass and organics in the soil, and soil may be compacted but no surface soil is removed. It is anticipated that overland drive and crush could be implemented where new access is required in flat terrain (0 to 3 percent slope) and within the vegetation communities listed below.

- Semidesert grassland
- Lower Colorado River subdivision of the Sonoran Desert
- Chihuahuan Desertscrub
- Plains and Great Basin grassland
- Sand dunes
- Plains-mesa grassland
- Plains-mesa sand scrub
- Desert grassland

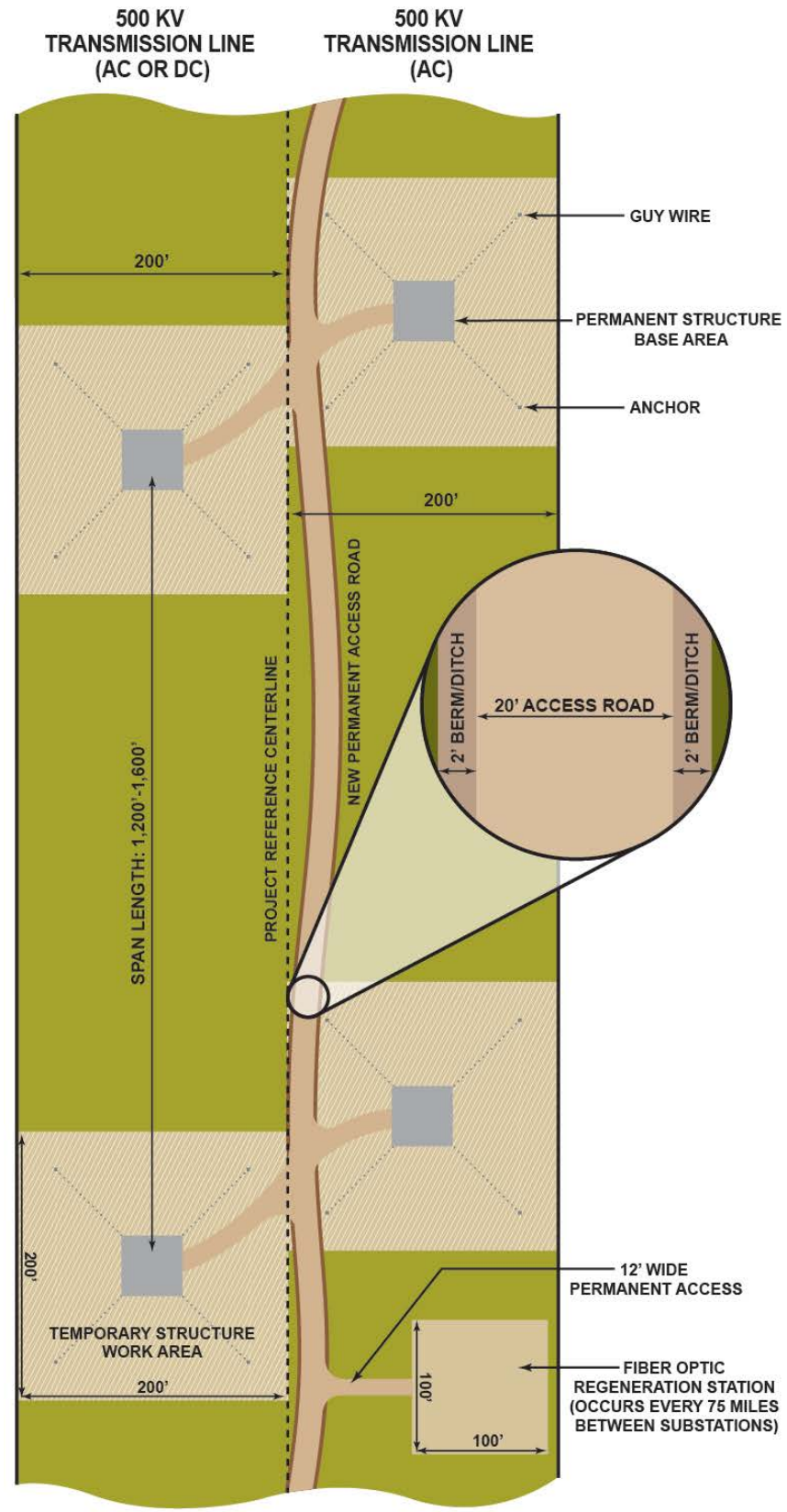

ILLUSTRATION SHOWS CONDITION WHERE NEW ACCESS IS REQUIRED.

Figure 2-31. Typical Right-of-Way Configuration

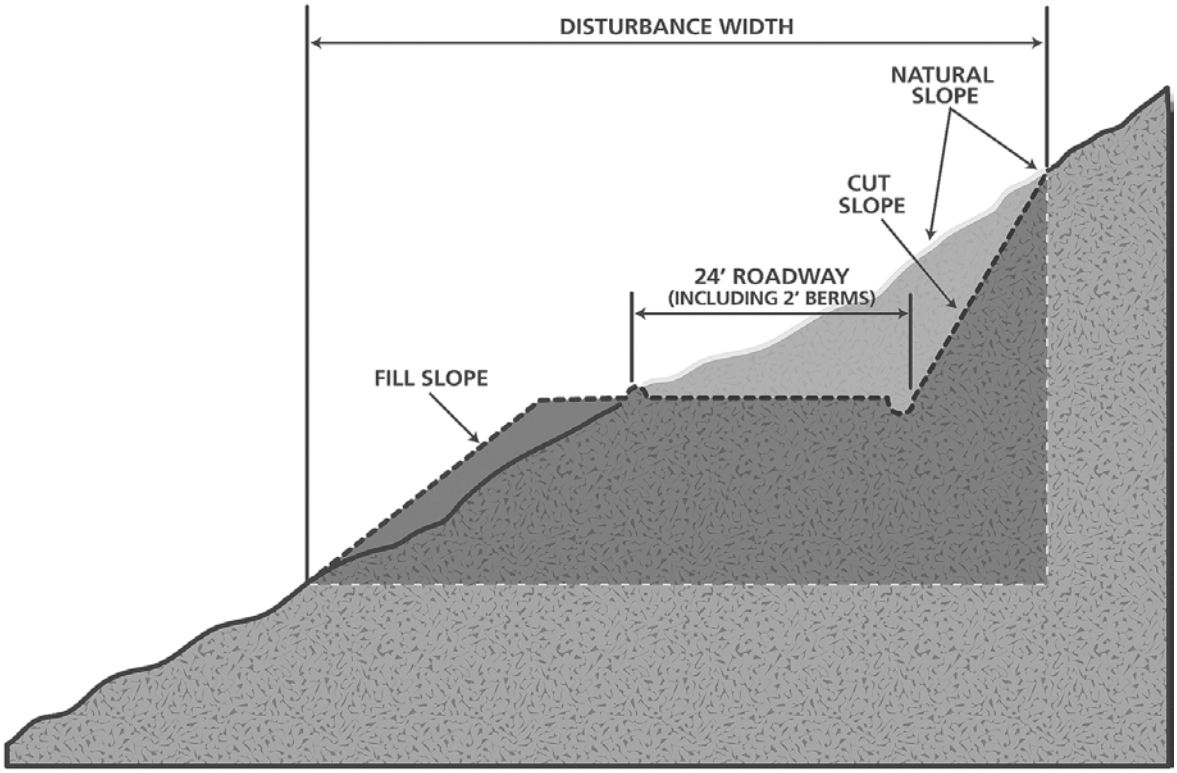

Figure 2-32. Typical Roadway Cut and Fill Conditions

Where new roads are required outside of the vegetation communities identified above, and where no grading is necessary (i.e., areas of 0 to 3 percent slope), overland cut and clear would be used to the greatest extent possible. Overland cut and clear is the removal of all vegetation to improve or provide suitable access for equipment. All vegetation is removed using above-ground cutting methods that leave the root mass intact. Soil is compacted but no surface soil is removed.

In certain areas, it could be necessary to block roads after construction to restrict future access for general and undesired use. Such areas would be identified through negotiations with the landowner or land-management agency, and identified in the final POD. Methods for road closure or management may include installing locking gates or obstructing the path with earthen berms or boulders. Blocked access routes would have the ability to be reopened, when necessary, where access is impeded for maintenance and emergency repairs.

Access Levels

For the EIS analysis, three levels of access were identified and the associated amount of ground disturbance from upgrading or constructing access was estimated (Table 2-7). A description of the methods used to estimate the levels of disturbance associated with access are included in Appendix I – Analysis of Access Conditions and Potential Ground Disturbance. Existing roads suitable for access and the general condition for each have been mapped. This information was combined with slope and vegetation classifications, to provide an estimate of the potential ground disturbance that could result from using existing access roads, upgrading existing roads, or constructing new roads. Estimates of ground disturbance were applied to analyze impacts to environmental resources.

Table 2-7. Access Levels and Associated Potential Ground Disturbance					
		Area of Potential Ground Disturbance			
Access Level	Access Road Condition	Slope (percent)	Access Road Miles per Mile of Transmission Line	Spur Road Length (feet)	Ground Disturbance Ratio (acres per mile)
1	No road improvements required, 24-foot spur road used for width of disturbance	0 – 8	1.1	770	1.6
		8 – 15	1.5	1,050	2.2
		15 – 35	1.8	1,260	2.6
		35+	2.3	1,610	3.4
2	Improvement to existing road required, ground disturbance includes 10-foot width plus 24-foot-wide spur road	0 – 8	1.1	770	2.8
		8 – 15	1.5	1,050	3.4
		15 – 35	1.8	1,260	3.8
		35+	2.3	1,610	4.6
3	Construct new access road with 24-foot width total disturbance	0 – 8	1.1	–[1]	3.2
		8 – 15	1.5	–[1]	4.4
		15 – 35	1.8	–[1]	5.2
		35+	2.3	–[1]	6.7

[1] Spur roads are included within temporary structure work areas, up to 700 feet within right-of-way (see Figure 2-31)

Access levels have been organized numerically, beginning with the access level of least disturbance. Existing roads suitable for Project construction access were mapped, and segments of the Project alternatives were designated as Level 1 based on two criteria associated with these roads: (1) alternatives are within 700 feet of an existing road suitable for construction, and alternatives parallel that existing road for a minimum of 700 feet, or (2) where an existing road suitable for construction crosses the proposed Project right-of-way, or another existing road suitable for construction crosses the proposed Project right-of-way within 0.5 mile along the Project representative centerline.

Existing roads requiring improvements were also mapped and segments of the Project alternatives were designated as Level 2, based on the same criteria as described for Access Level 1.

Areas of Project alternatives greater than 700 feet from existing roads, or where existing roads crossed the proposed Project right-of-way but did not have another road cross the proposed Project right-of-way within 0.5 mile, would require new access roads to be constructed and were designated as Access Level 3. In addition, access levels were combined with vegetation data to identify areas of potential temporary disturbance, thus minimizing impacts to environmental resources as a result of Project construction.

2.4.10.2 Equipment Staging and Construction Yards

Staging of equipment would be located at pulling and tensioning sites or other temporary work areas. These areas would be used to temporarily lay out equipment to be used for work on specific Project activities at nearby locations. Construction yards would be located approximately every 40 miles, and concrete batch plants would be located on temporary work sites of approximately 3 to 5 acres, located every 30 miles along the right-of-way.

2.4.10.3 Structure Pad Clearing/Grading

Clearing of natural vegetation would be required for construction purposes (access, spur roads, structure sites), land surveying activities, clearances for electrical safety, long-term maintenance, and reliability of the transmission lines. Within or adjacent to the right-of-way, mature vegetation would be removed under or near the conductors to provide adequate electrical clearance, as required by the NESC. Typically, only large trees or fast growing vegetation approximately 12 feet or higher would be topped or removed. In sensitive areas, as determined by the BLM or other agencies, clearing of natural vegetation would occur by hand.

Typical Structure Site and Work Area

At each structure site, work areas are required to facilitate the safe operation of equipment and construction. Typical work areas in flat terrain would require an area of 200 feet by 200 feet of temporary disturbance for equipment and construction tasks. The work area would be cleared of vegetation to the extent necessary. Access within the work area would be overland travel with grading, as required in the work site. After construction, all temporary work areas would be restored in accordance with the Reclamation Plan. Permanent disturbance associated with the structures and structure footings would include an area of up to 60 feet by 60 feet (all dimensions are approximate for tangent structures).

Specific structure sites and work areas would be identified in the POD, once a final route has been determined.

Structure Site and Work Area in Steep/Rough Terrain

Work areas may be expanded to 200 feet by 300 feet in areas of steep or rough terrain, though the size of the work area may vary depending on site conditions. Approximately two-thirds of this area would be permanently disturbed, to accommodate structures and crane pads used for both construction and operations crews. The remaining one-third of the area would be restored in compliance with the Reclamation Plan, following temporary construction use.

At structure sites in areas of rough and steep terrain, where economically practicable or a result of sensitive resource issues, helicopters may be used for construction purposes. This would involve ferrying work crews, supplies, and structure materials to the structure sites.

2.4.10.4 Foundation Installation

Power equipment would be used to excavate foundations. Where the soil permits, a vehicle-mounted power auger or backhoe would be used. In rocky areas, the foundation holes may be excavated by drilling and blasting or installing special rock anchors. Soil stabilization by water or a gelling agent may be required for excavation in extremely sandy areas. The BLM would be notified in advance of any required blasting so that the area can be cleared and sensitive resources protected. After excavations are completed, cast-in-place, precast, or drilled pier footings would be installed, depending on the structure type.

The excavation and installation of the foundation would require access to the site by a power auger or drill, a crane, material trucks, and concrete trucks using the access roads. In environmentally sensitive areas or areas of steep terrain, excavation and installation of the foundation may use a power auger or drill brought in by helicopter or all-terrain vehicle (ATV).

Foundation holes left open or unguarded would be covered to protect the public and wildlife. If practical, fencing may be used. Soil removed from foundation holes would be stockpiled on the work area and used to backfill the foundation holes, as necessary. Any remaining soil would be spread on the access road. The first 6 inches of topsoil would be stockpiled separately, to ensure that the best possible topsoil for reseeding is not covered by auger cuttings during site rehabilitation. Some large rocks may be left onsite to help blend the area with the surrounding landscape.

2.4.10.5 Structure Assembly and Erection

Structures would be assembled and erected onsite using appropriately sized cranes; except where helicopter construction is employed due to access or environmental constraints, such as in areas with rough or steep terrain. The construction specification would be written to allow the contractor the flexibility to use ground-based or helicopter construction methods, or a combination of both.

When helicopter construction methods are employed, construction activities would be based at a fly yard. Fly yards would be used for material storage and partial assembly of each structure in multiple sections or components. The structure sections or components would be assembled by weight, based on the lifting capacity of the helicopter, and transported to the final structure location for installation. Heavy lift helicopters capable of lifting 15,000 to 20,000 pounds per flight (depending on elevation) would be used.

When ground-based construction methods are employed, tubular pole sections or bundles of steel for lattice towers and associated hardware for each structure would be delivered to the site by trucks and flatbed trailers. Tubular pole sections would be assembled on the ground at the site; the assembled structure would then be lifted onto foundations using a crane. The contractor would also have the option to assemble the tubular pole sections in place, assisted by helicopter. Lattice tower subsections, or tower components, would be pre-assembled on the ground using a truck-mounted crane. The pre-assembled bottom portion of towers (leg extensions) would be lifted onto foundations using a crane. Once the leg extensions are bolted to the foundation stub angles, the remaining tower components (tower body, body extension, cross arms, groundwire peaks) would be lifted in sequence and bolted to each other and to the leg extensions, completing the lattice tower erection. The crane would move along the right-of-way from one location to another, erecting structures.

2.4.10.6 Ground Rod Installation

As part of standard construction practices, prior to wire installation, structure footing resistance along the route would be measured. Grounding of structures would be accomplished by installation of driven ground rods, typically ¾-inch by 16 feet deep, or counterpoise (grounds), which consist of a bare copper-clad or galvanized steel cable buried a minimum of 12 inches

deep (minimum of 18 inches in cultivated areas), extending from one or more structure legs for approximately 200 feet within the right-of-way.

2.4.10.7 Stringing Conductors and Groundwire

Conductors and groundwires would be placed on the transmission line support structures by a process called stringing. The first step to wire stringing would be to install insulators (if not already installed on the structures during ground assembly) and stringing sheaves. Stringing sheaves are rollers that are temporarily attached to the lower portion of the insulators at each structure to allow conductors and OHGWs to be pulled along the line. In addition, temporary clearance structures (guard structures) would be erected where required for safety and protection during wire stringing operations. Guard structures consist of H-frame poles and nets placed on either side of an obstacle. These structures prevent groundwire, conductors, or equipment from falling on an obstacle.

Equipment for erecting guard structures includes augers, line trucks, pole trailers, and cranes. Guard structures may not be required for small roads or may be accommodated by line trucks or other methods. On such occasions, other safety measures such as barriers, flagmen, or other traffic control would be used.

Once the stringing sheaves and temporary guard structures are in place, a pilot line would be pulled (strung) from tower to tower (or pole to pole) by helicopter, truck, or ATV, and threaded through the stringing sheaves at each structure. A larger diameter, stronger line (pulling line or hard line) would then be attached to the pilot line and strung. This process is repeated until the groundwires and conductors are pulled through all sheaves. Groundwires and conductors would be strung using powered pulling equipment at one end, and powered braking or tensioning equipment at the other.

The 500 kV lines use a three-conductor bundle for each phase (three bundles for AC, two bundles for DC). The conductor would be delivered on steel reels containing approximately 9,000 feet of conductor per reel; therefore, conductor joints would occur approximately every 9,000 feet. These joints, also called splices or compression sleeves, would provide electrical continuity and mechanical strength between adjacent reels of conductors. Following the initial stringing operation, pulling and tensioning the wires/conductors would be required to achieve the correct sagging of transmission lines between structure supports. Typically, sites for tensioning and pulling equipment are approximately 200 feet by 600 feet, and would be required approximately every 18,000 feet. However, to accommodate directional changes within the Project alignment and site-specific design requirements, smaller 200 feet by 400 feet pulling, tensioning, and/or splicing sites would be located at 9,000-foot intervals between the larger 200 feet by 600 feet tensioning and pulling sites. Also, when construction occurs in steep and rough terrain, larger, less symmetrical pulling and tensioning areas at more frequent locations may be required. Once a final route has been determined, pulling, tensioning, and splicing sites would be identified in the POD.

2.4.10.8 Substation and AC/DC Converter Stations

Preparation and construction at the substation sites would require the following:

- Cut-and-fill grading (terrain dependent)
- Placement and compaction of structural fill to serve as a sub-base under the foundations for equipment
- Subsurface grounding grids
- Subsurface control conduits
- Grading to maintain drainage patterns
- Oil spill containment facilities
- Gravel-surfaced yard
- Gravel-surfaced parking areas approximately 100 by 100 feet
- Gravel-based roads (a minimum of 24 feet wide, based on site-specific conditions)
- Fencing and gate
- Facility construction
- Revegetation with native plants, where practicable

2.4.10.9 Waste Removal

Construction sites, material storage yards, and access roads would be kept orderly. Refuse and trash would be removed from the sites and disposed of in an approved landfill. In remote areas, trash and refuse would be removed to a construction staging area until proper disposal can be facilitated. No open burning of construction trash would occur without appropriate approval.

2.4.10.10 Reclamation

The right-of-way would be reclaimed to its original condition as is practicable, through methods described in the Reclamation Plan as described in the POD. In areas of temporary disturbance, all practical means would be made to reclaim the land to its original contour, natural drainage patterns, and vegetation (i.e., use of native plants or seed mix) along the right-of-way, as required by the BLM and outlined in the POD.

2.4.10.11 Labor Force and Equipment

The estimated workforce and equipment required to construct the proposed transmission lines and substations are listed in tables 2-8 and 2-9. The proposed Project would consist of several phases of construction at various locations, allowing some shared personnel between work sites according to the task schedule. An estimated total of 206 workers would be required for construction of each transmission line, and approximately 55 workers would be needed to construct each new substation. For Option A, up to four new AC substations would be constructed with the first AC transmission line, followed by the expansion of each of those substations for the second AC transmission line. For Option B, up to four new AC substations would be constructed with the AC transmission line, and AC/DC converter substations would be constructed at the Pinal Central Substation and the proposed SunZia East Substation, for a total workforce of 110. In total, the maximum substation construction workforce would be 424 for

Option A, or 330 for Option B. (Actual construction workforce at any one time would be less than the maximum.)

2.4.11 Operation, Maintenance, and Decommissioning

The transmission lines would be protected with power circuit breakers and line relay protection equipment. If a conductor fails, power would be automatically removed from the line. Lightning protection would be provided through OHGW.

All buildings, fences, and other structures with metal surfaces located within 200 feet of the centerline of the right-of-way would be grounded, as needed. Typically, residential buildings located 200 feet or more from the centerline would not require grounding; the need to ground other structures beyond 200 feet would be determined by the NESC. All metal irrigation systems that parallel transmission lines for a distance of 1,000 feet or more and within 100 feet of the centerline would be grounded. If grounding were required outside the right-of-way, a temporary use permit would be obtained, as needed.

2.4.11.1 Maintenance

The transmission lines would be patrolled bi-annually for maintenance, either by helicopter or by driving patrol. Over-flight line maintenance during the spring and fall of each year is based on weather conditions, helicopter availability, and statutory requirements of the states served by the Applicant. Spring and fall over-flight maintenance activities are conducted prior to peak demand of summer and winter months, to identify and resolve conditions that pose an immediate hazard to the public or employees, or that risk immediate loss of supply or damage to the electrical system. Maintenance crews would be trained and adhere to Bird Management and Avian Protection Plans for all maintenance activities. Avian monitors would routinely identify nest locations and check structures for activity. Over-flight maintenance activities are conducted at a distance and speed that would not result in disturbance to avian species or nests.

Monitoring and maintenance would be done from approved or existing access roads. When access into the structure locations needs improvement, a tracked bulldozer or other heavy equipment would be used after notifying the BLM Authorized Officer. As necessary, maintenance crews would be required to re-scarify and reclaim newly disturbed areas to pre-existing conditions. Any berms or boulders that were in place to limit access would also be restored after completion of the maintenance work.

Table 2-8. Estimated Personnel and Equipment for Transmission Line Construction					
		500 kV AC Line		500 kV AC or DC Line	
Activity	Equipment Type	Quantity of Equipment	Personnel (per line)	Quantity of Equipment	Personnel (per line)
Material Yard/ Receiving/Distribution	¾-ton Pickup	4	14	4	14
	10,000 lb. Forklift	2		2	
	50-ton Crane	2		2	
	Tractor Trailer (flatbed)	6		6	
	20-ton Boom Truck	3		3	
	100-ton Crane	0		0	
Survey (Construction Staking)	½-ton Pickup	2	4	2	4
	ATVs	4		4	
Soil Borings	¾-ton Pickup	2	6	2	6
	Drill Rig	2		2	
Right-of-Way Clearing	¾-ton Pickup	3	4	3	4
	Chainsaw	2		2	
	Hydro Axe	1		1	
Roads and Access	1-ton Pickup	2	6	2	6
	Cat D-6	1		1	
	Grader	1		1	
	Semi w/Dump Trailer	1		1	
	Water Truck	3		3	
Foundations (3 crews)	½-ton Pickup	3	36	3	36
	1-ton Pickup	6		6	
	Drill Rig	3		3	
	Loader/Backhoe	3		3	
	Boom Truck	3		3	
	Concrete Truck	6		6	
	Generator	3		3	
	Cat D-6	3		3	
Structure Assembly Lattice (3 crews)	½-ton Pickup	3	30	3	30
	1-ton Line Truck	3		3	
	20-ton Boom Truck	3		3	
	Air Compressor	3		3	
	30-ton R/T Crane	3		3	
Structure Assembly Tubular (1 crew)	½-ton Pickup	1	10	1	10
	1-ton Flatbed Truck	1		1	
	Air Compressor	1		1	
	30-ton R/T Crane	1		1	

Table 2-8. Estimated Personnel and Equipment for Transmission Line Construction					
		500 kV AC Line		500 kV AC or DC Line	
Activity	**Equipment Type**	**Quantity of Equipment**	**Personnel (per line)**	**Quantity of Equipment**	**Personnel (per line)**
Structure Erection (Lattice – 1 crew)	½-ton Pickup	1	10	1	10
	1-ton Flatbed Truck	1		1	
	200-ton Crane	2		2	
	20-ton Boom Truck	2		2	
	Air Compressor	1		1	
Structure Erection (Tubular – 1 crew)	½-ton Pickup	1	10	1	10
	1-ton Flatbed Truck	1		1	
	200-ton Crane	1		1	
	20-ton Boom Truck	1		1	
	Air Compressor	2		2	
Wire Pulling (Conductor, OHGW, OPGW)	1-ton Line Truck	2	20	2	20
	200-ton Crane	2		2	
	20-ton Boom Truck	2		2	
	Air Compressor	0		0	
	Cat D-8	3		3	
	Puller	2		2	
	Tensioner	2		2	
Conductor Clipping and Dead-ending (3 clip, 1 dead-end)	½-ton Pickup	4	32	4	32
	1-ton Line Truck	6		6	
	Bucket Truck/ Boom w/Basket	4		4	
Restoration	½-ton Pickup	2	4	2	4
	Tractor with Disc	1		1	
	Cat D-4	1		1	
	Hydro Seed Truck	1		1	
Contractor Management/ Compliance Monitors	½-ton Pickup	20	20	20	20
	ATV (Inspection)	2		2	
Total Personnel[1]			**206**		**206**

[1] Maximum total personnel required during the construction period, considering all tasks (actual personnel at any one time would be up to 824 if two contractors are working simultaneously).

Table 2-9. Estimated Personnel and Equipment for Substation Construction							
		500 kV Transmission Line (AC) (per substation)		500 kV Transmission Line (DC) (per substation)		Second 500 kV Transmission Line (AC) (per substation)	
Activity	**Equipment Type**	**Quantity of Equipment**	**Quantity of Equipment**	**Personnel**	**Personnel**	**Quantity of Equipment**	**Personnel**
Material Yard/ Receiving/ Distribution	¾-ton Pickup	2	2	3	3	2	3
	5-ton R/T Forklift	2	2			2	
	50-ton Crane	1	1			1	
	Tractor Trailer	1	1			1	
	30-ton Boom Truck	1	1			1	
Construction Staking	½-ton Pickup	1	1	2	2	1	2
Soil Borings	¾-ton Pickup	1	1	2	2	1	2
	Drill Rig	1	1			1	
Site Clearing and Grading	¾-ton Pickup	2	2	8	8	2	4
	F-350 Pickup	2	2			2	
	Cat D-6	2	2			2	
	Grader	2	2			2	
	Semi with Dump Trailer	4	4			4	
	Water Truck	1	1			1	
	Scrapers	1	1			1	
	Roller Compactors	2	2			2	
Foundations/ Raceway/Grounding	½-ton Pickup	3	2	10	10	2	10
	¾-ton Pickup	4	2			2	
	Drill Rig	1	1			1	
	Loader/ Backhoe	2	2			2	
	Boom Truck	1	1			1	
	Concrete Truck	1	1			1	
	Excavator	1	1			1	
	Dump Truck	2	2			2	
	5-ton R/T Forklift	1	1			1	
	Mini Excavator	2	2			2	

Table 2-9. Estimated Personnel and Equipment for Substation Construction							
		500 kV Transmission Line (AC) (per substation)		500 kV Transmission Line (DC) (per substation)		Second 500 kV Transmission Line (AC) (per substation)	
Activity	**Equipment Type**	**Quantity of Equipment**	**Quantity of Equipment**	**Personnel**	**Personnel**	**Quantity of Equipment**	**Personnel**
	Air Compressor	2	2			2	
	Trencher	2	2			2	
	Roller Compactor	2	2			2	
	Hand Compactor	3	3			3	
Structure and Equipment Installation	½-ton Pickup	4	4	10	10	4	10
	1-ton Line Truck	2	2			2	
	200-ton Crane	1	1			1	
	30-ton Boom Truck	4	4			4	
	Air Compressor	3	3			3	
	Man Lifts	4	4			4	
	50-ton Crane	2	2			2	
	Generator	2	2			2	
	5-ton R/T Forklift	4	4			4	
Wiring	½-ton Pickup	1	1	12	12	1	12
	1-ton Line Truck	1	1			1	
	Generator	2	2			2	
	5-ton R/T Forklift	1	1			1	
Testing and Cleanup	½-ton Pickup	2	2	5	5	2	5
	Bucket Truck/Boom w/Basket	2	2			2	
Contractor Management	½-ton Pickup	3	3	3	3	3	3
Total per substation			55		55		51
Total for Option A[1]			**220**				**204**
Total for Option B[1]			**220**		**110**		

[1] Maximum total personnel required during the construction period (actual personnel at any one time would be less), considering all tasks for construction of 4 AC substations (Option A) or 4 AC and 2 DC substations (Option B). Multiple crews may be required depending on schedule requirements.

Procedures for vegetation management and noxious weed treatment would be outlined in the Final POD. The need for vegetation management would be determined by regular inspection patrols according to NERC standards to prevent accidental grounding contact with conductors. Where necessary, maintenance crews would trim trees and other woody vegetation, and remove brush from the right-of-way. Vegetation management would occur periodically (every 2 to 5 years), generally in the summer and fall seasons. The Project right-of-way would not be chemically treated with pesticides or herbicides unless needed, and only upon prior approval of the land manager or owner. Chemical treatment generally would be limited only to areas with noxious weeds. The Applicant would comply with requirements of the land-managing agencies regarding management of noxious weeds (e.g., cleaning equipment to prevent spread of noxious weeds) along access roads, within the right-of-way, and at temporary use areas.

Inspection and maintenance of the communication regeneration site, including the building, communication facilities, and other physical equipment, would occur as needed. Maintenance of the communication facilities would consist of testing, repairing, and replacing electronic equipment located within the building at the regeneration site.

The substation yards would be maintained and inspected according to BMPs and the Applicant's standards.

2.4.11.2 Fire Protection and Emergency Response

Emergencies are any events requiring immediate response to a condition and may include fires, car-to-pole contacts, downed poles, transformer outages, and/or outages due to downed wire as a result of extreme weather. All applicable fire laws and regulations, including BLM fire safety standards, would be observed during construction and operation. A Fire Protection Plan would be provided in the Final POD. If extreme fire conditions were to occur, the BLM and other land management agency representatives would be contacted and access would be restricted. Maintenance personnel would coordinate with the agency representatives and implement practical measures to report, prevent, and suppress fires such as brush clearing, stationing a water truck at the job site to keep the ground vegetation moist in extreme fire conditions, enforcing red flag warnings, and providing "fire behavior" training to all pertinent personnel.

Responding crews would vary in number and equipment needs, depending on the size and severity of the emergency. Typically, a four-person crew with a line truck, aerial lift truck, and an assist truck would respond to the emergency to make repairs. Crews may be required to respond to an emergency in a remote area without roads. In areas without vehicle access, helicopters may be used to respond quickly to emergencies. Refueling of equipment and helicopter staging areas would be at nearby airports or staging areas on private property.

2.4.11.3 Decommissioning

The term of the BLM right-of-way grant to allow use of federal land would be limited to 50 years, although the useful life of the Project facilities is projected to be at least 50 years and up to 75 years. The transmission lines and associated facilities would be decommissioned at the end of the useful life of the Project if the facilities were no longer required (after 50 years, or longer with a new right-of-way grant or renewal). Subsequently, conductors, insulators, concrete pads,

and hardware would be dismantled and removed from the right-of-way. Tower and pole structures would be removed and foundations broken off at least 2 feet below ground surface. All areas of permanent disturbance would be restored in accordance with a Termination and Reclamation Plan approved by the BLM Authorized Officer.

2.4.12 Mitigation

Mitigation includes specific means, measures, or practices that would reduce or eliminate effects of the proposed action or alternatives. Mitigation may be used to reduce or avoid adverse impacts to environmental resources, whether or not they are significant in nature. Standard mitigation (ST) measures are those that apply to the Project as a whole. These measures typically address specific environmental policies, BMPs, planning guidelines, or regulatory requirements. Standard mitigation measures are listed in Table 2-10.

Selective mitigation (SE) measures (Table 2-11) were developed in collaboration with the BLM and cooperating agencies and include measures or techniques recommended or required by the agencies or landowners. As such, selective mitigation measures provide a planning tool for minimizing potential adverse impacts. Where warranted, selective mitigation measures are recommended to reduce potential impacts in specific locations. These measures would be modified as appropriate, to reduce impacts associated with specific resource concerns (e.g., cultural, biological, visual) associated with the selected route, and included prior to Project construction in the Final POD. Additional site-specific NEPA analysis would be completed as required (e.g., where construction of new access routes would be located outside of the proposed right-of-way). The construction contractor(s) would adhere to the measures identified during the engineering/design phase, as well as those measures that address construction and reclamation activities. The Compliance Inspection Contractor (CIC) would be responsible for the oversight of the implementation of these measures, to ensure that the Applicant and the construction contractor(s) meet the intent of the mitigation measures.

In addition to standard and selective mitigation measures, an alternative to constructing overhead transmission lines to cross the Rio Grande floodplain is evaluated in Chapter 4, Section 4.16 – Effects of the Underground Mitigation Alternative. The results of the evaluation indicated that burial of the transmission line across the Rio Grande would not be a feasible alternative. An underground transmission line would pose greater operational risks and maintenance concerns, as well as permanent impacts to riparian and aquatic habitats.

In compliance with Section 7 of the ESA, mitigation to address the loss of critical habitat would be implemented. Such mitigation measures may include on-site or off-site compensation or habitat replacement, to be specified by the USFWS in the Biological Opinion. The USACE would also participate in this mitigation plan as required under Section 404 of the CWA, to address the potential loss of wetlands or riparian resources.

To address potential impacts to migratory birds, and in compliance with the Migratory Bird Treaty Act (MBTA), EO 13186, and the Bald and Golden Eagle Protection Act (BGEPA), mitigation measures have been prescribed in this EIS. Among others, standard mitigation measures include preconstruction surveys (ST 25, Table 2-10), and selective measures include installing bird diverters to increase visibility of wires (SE 15, Table 2-11).

As discussed in Section 2.3.3.2, Alternative Transmission Technologies, undergrounding the entire length or portions of the Project is considered to be technically infeasible; however, the BLM, DOD, and the Applicant continue to review the feasibility of underground transmission systems and other possible measures to address potential impacts related to the construction and operation of the SunZia Project. Additional discussions relate to indemnification and operational procedures to respond to concerns identified by the WSMR. In the event that further discussions between the BLM, DOD, and the Applicant lead to additional information pertinent to the Project analysis, these issues would be addressed consistent with NEPA's requirements before the BLM issues a final decision.

Additional mitigation measures to reduce the potential for avian collisions would be specified in detail in the Final POD, and associated Avian Protection Plan and conservation strategy as approved by the USFWS, to be implemented during construction and operation of the Project. The USFWS would participate in the mitigation planning process to facilitate the eventual approval of the Avian Protection Plan, which would identify certain measures that may include, but would not be limited to, the following:

- Applying special structural design to decrease the heights of groundwires and conductors
- Marking wires (bird diverters) and/or using special structure design to increase visibility to birds
- Monitoring to ensure that mitigation measures are implemented
- Conducting additional avian studies, surveys, and/or monitoring to record the presence of birds and incidence of avian collisions, and provide data that could be useful to minimize the potential for collisions with the Project, as well as with existing and future power lines in other locations
- Conducting habitat equivalency, or resource equivalency, analyses for calculating in-kind replacement of lost ecological functions and values (services), as determined applicable, in order to improve the breeding productivity of migratory birds

Table 2-10. Standard Mitigation Measures

Standard mitigation measures are part of the Project description; they are applied to all alternatives considered in the impact assessment.

	Mitigation Measure	Mitigation Application Phase		
		Engineering, Design, and Location	Construction	Operations
1	Prior to construction, a detailed POD will be developed to further describe Project features, selective mitigation, and procedures. At a minimum, the POD will address Project design, construction and operation considerations, biological considerations (including noxious weed management), cultural resources, paleontological considerations, hazardous materials management, and reclamation considerations.	●	●	●
2	All vehicle movement outside the right-of-way would typically be restricted to designated access, contractor acquired access,	●	●	●

Table 2-10. Standard Mitigation Measures				
Standard mitigation measures are part of the Project description; they are applied to all alternatives considered in the impact assessment.				
	Mitigation Measure	**Mitigation Application Phase**		
		Engineering, Design, and Location	**Construction**	**Operations**
	or public roads.			
3	The boundary of construction activities would typically be predetermined, with activity restricted to and confined within those limits. No paint or permanent discoloring agents would be applied to rocks or vegetation to indicate survey or construction activity limits.		●	
4	The alignment of any new access roads or overland route would follow the designated area's landform contours where possible, provided that such alignment does not additionally impact resource values. This would minimize ground disturbance and/or reduce scarring (visual contrast).	●	●	
5	In construction areas where grading is not required, vegetation would be left in place wherever possible, and original contour would be maintained to avoid excessive root damage and allow for regrowth. All existing roads would be left in a condition equal to or better than their condition prior to the construction of the transmission lines, as determined by the appropriate land-managing agency.	●	●	
6	To limit new disturbance, existing access roads in the Project area would be used to the extent practicable, provided that doing so does not additionally impact resource values.	●	●	●
7	Construction holes left open overnight would be appropriately fenced or covered to prevent damage to wildlife or livestock.		●	
8	In construction areas (e.g., marshalling yards, structure sites, spur roads from existing access roads) where grading is required, surface restoration would be implemented as required by the landowner or BLM Authorized Officer. The method of restoration would normally consist of returning disturbed areas back to their natural contour, reseeding (where required), cross drains installed for erosion control, placing water bars in the road, and filling ditches.		●	
9	Watering facilities (e.g., tanks, developed springs, water lines, wells, etc.) would be repaired or replaced if they are damaged or destroyed by construction activities to their predisturbed condition, as required by the landowner or land management agency. Temporary watering facilities would be provided for wildlife and livestock until permanent repair or replacement is complete.		●	

Table 2-10. Standard Mitigation Measures				
Standard mitigation measures are part of the Project description; they are applied to all alternatives considered in the impact assessment.				
		Mitigation Application Phase		
	Mitigation Measure	**Engineering, Design, and Location**	**Construction**	**Operations**
10	Nonspecular conductors would be used, where specified by the BLM Authorized Officer, to reduce visual impacts.	●	●	
11	"Dulled" metal or self-weathering finish structures would be used to reduce visual impacts, if specified by the BLM Authorized Officer.	●	●	
12	Structures and/or groundwire would be marked with high-visibility devices where required by government agencies (e.g., FAA).	●	●	●
13	On agricultural land, right-of-way would be aligned, in so far as practicable, to reduce the impact to farm operations and agricultural production.	●		
14	Prior to construction, all supervisory construction personnel would be instructed on the protection of cultural and ecological resources. The training program outlined in the HPTP would be implemented. To assist in this effort, the construction CIC or a resource specialist would address: (a) federal and state laws regarding antiquities and plants and wildlife, including collection and removal; (b) the importance of these resources and the purpose and necessity of protecting them.	●	●	
15	Cultural resources would continue to be considered during post-EIS phases of Project implementation, in accordance with a PA executed for the Project. This would involve efforts such as intensive surveys, documentary and archival research, and/or visual modeling to inventory and evaluate potential impacts to historic properties within the areas of potential effect, as identified in the PA (direct and indirect). This would also require preparation and approval of a cultural resource inventory report, and the preparation and implementation of an approved HPTP to avoid, minimize, or mitigate adverse effects, as appropriate to each historic property.	●	●	●
16	Project Owners would respond to complaints of line-generated radio or television interference by investigating the complaints and implementing appropriate mitigation measures. The transmission line would be evaluated on a regular basis so that damaged insulators or other line materials that could cause interference are repaired or replaced.			●
17	Project Owners would apply necessary mitigation to eliminate problems of induced currents and voltages onto conductive objects sharing right-of-way, to the mutual satisfaction of the parties involved.	●	●	●

Table 2-10. Standard Mitigation Measures				
Standard mitigation measures are part of the Project description; they are applied to all alternatives considered in the impact assessment.				
		Mitigation Application Phase		
	Mitigation Measure	**Engineering, Design, and Location**	**Construction**	**Operations**
18	Roads would be built as near as possible at right angles to the streams and washes. Culverts or temporary bridges would be installed where necessary. All construction and operations activities shall be conducted in a manner that would minimize disturbance to vegetation, drainage channels, and intermittent or perennial stream banks.	●	●	●
19	To the extent practicable, structures would be sited with a minimum distance of 200 feet from stream banks.	●		
20	All requirements of those entities having jurisdiction over air quality matters would be adhered to, any necessary dust control plans would be developed, and permits for construction activities would be obtained. Open burning of construction trash would not be allowed unless permitted by appropriate authorities.		●	
21	Fences and gates would be repaired or replaced to their original, predisturbed condition, as required by the landowner or the BLM Authorized Officer if they are damaged or destroyed by construction activities. New temporary and/or permanent gates would be installed only with the permission of the landowner or the BLM. Temporary gates not required for postconstruction access control (see SE 6) would be removed following construction completion, and the area restored in accordance with the POD (see ST 1).		●	●
22	Transmission line materials would be designed and tested to minimize corona. Bundle configuration and larger diameter conductors would be used to limit the audible noise, radio interference, and television interference due to corona. Tension would be maintained on all insulator assemblies to ensure positive contact between insulators, avoiding sparking. Caution would be exercised during construction and operations to avoid scratching or nicking the conductor surface, which may provide points for corona to occur.	●	●	●
23	During operation of the transmission lines, the right-of-way would be maintained free of nonbiodegradable debris. Slash would be left in place or disposed of in accordance with requirements of the land owner or management agency.		●	●
24	In consultation with appropriate land-management agencies, specific mitigation measures for paleontological resources would be developed and implemented to mitigate any identified adverse impacts. These measures would include: preparation of a PRMP; paleontological surveys; personnel education; monitoring ground disturbance for fossils; curation of fossils; and deposition of fossils in a paleontological repository.	●	●	

Table 2-10. Standard Mitigation Measures				
Standard mitigation measures are part of the Project description; they are applied to all alternatives considered in the impact assessment.				
		Mitigation Application Phase		
	Mitigation Measure	**Engineering, Design, and Location**	**Construction**	**Operations**
25	Preconstruction surveys for species listed under the ESA or specified by the appropriate land management agency as sensitive or of concern would be conducted in areas of known occurrence or suitable habitat. Timing of the surveys would be determined by species, coordinated with agency wildlife biologists, and completed prior to construction. Monitoring of construction activities would be required in some areas to ensure that effects to these species are avoided during construction. If Bald Eagle or Golden Eagle nests are identified during preconstruction surveys, seasonal restrictions on construction within a specified buffer would be implemented in coordination with the USFWS and/or species survey protocols, as appropriate, and comply with the BGEPA. Preconstruction nesting-season surveys for migratory birds, and surveys for Burrowing Owls in suitable habitat, would be conducted as needed to comply with the MBTA.	●	●	●
26	Preconstruction native plant inventories and surveys for noxious weed species as stipulated by the appropriate land-administering agency would also be conducted once transmission line centerline, access roads, and tower sites have been located.	●	●	
27	Surveys for bat roosts would be conducted within ¼ mile of the Project right-of-way in areas that potentially contain caves, karst features, or mines. Occupied bat roosts would be avoided.	●	●	
28	Paniculate agave plants (*Agave palmeri, A. parryi,* and *A. chrysantha*) and saguaro cacti (*Carnegiea gigantea*) within the known range of the Lesser Long-nosed Bat or Cactus Ferruginous Pygmy-owl would be avoided or salvaged for replanting within the right-of-way or suitable adjacent habitat. Only agaves not possessing flower stalks would be salvaged, and only saguaros of transplantable size (15 feet or less in height) would be salvaged.	●	●	
29	Electrical facility design would be in accordance with "Suggested Practices for Raptor Protection on Power Lines" (Avian Power Line Interaction Committee 2012).	●		
HPTP – Historic Properties Treatment Plan PRMP – Paleontological Resources Monitoring Plan				

This page intentionally left blank.

Table 2-11. SunZia Selective Mitigation Measures

Mitigation Measure	Mitigation Examples	Mitigation Application Phase			Mitigation Effectiveness								
					Water Resources		Earth Resources		Biological Resources				
		Engineering, Design, and Location	Construction	Operations	Streams/ Washes	Wetlands/ Springs	Geology/ Soils	Paleontology	Sensitive Wildlife Species	Sensitive Plant Species	Land Use	Visual Resources	Cultural Resources
1. No widening or upgrading of existing access roads would be undertaken in the area of construction and operations, except for repairs necessary to make roads passable, where soils and vegetation are very sensitive to disturbance, or where existing archaeological sites are present.	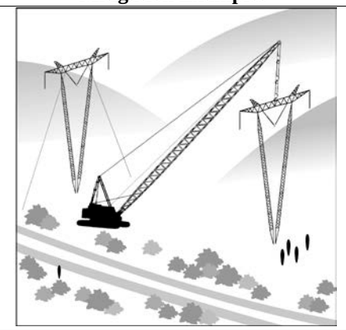	●	●	●	●	●	●			●	●	●	●
					Avoiding unnecessary access road upgrades would limit the amount of habitat disturbed or removed. In addition, the avoidance of road upgrades would minimize increases to vehicular traffic, thereby reducing the potential for indirect effects such as damage or loss of vegetation, spread of noxious weeds, harassment of wildlife, vandalism of cultural resources, and disturbance to sensitive land uses (e.g., parks, preservation, and recreation areas).								
2. There would be no blading of new access roads in select areas of construction and operations. Existing crossings would be utilized at perennial streams, designated recreational trails, and irrigation channels. Off-road or cross-country access routes would be used for construction and maintenance in select areas. This would minimize ground disturbance impacts. These access routes must be flagged with an easily seen marker, and the route must be approved in advance of use by the BLM Authorized Officer or landowner.	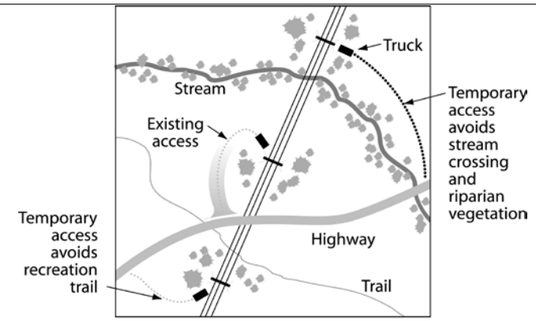	●	●		●	●	●		●	●	●	●	●
					Selective Mitigation Measure 2 is effective for the same reasons as Selective Mitigation Measure 1. Minimizing ground-disturbing construction activities in the same vicinity as streams would limit disturbance to riparian areas and/or streambeds, thereby avoiding turbidity and sedimentation. In addition, it would limit land use conflicts with trails and/or disruption of sensitive views.								
3. Overland access (i.e., drive-and-crush or cut-and-clear) would be used to the greatest extent possible in areas where no grading would be needed to access work areas. Drive-and-crush is vehicular travel to access a site without significantly modifying the landscape. Vegetation is crushed, but not cropped. Soil is compacted, but no surface soil is removed. Cut-and-clear is considered as brushing off (removal) of all vegetation to improve or provide suitable access for equipment. All vegetation is removed using above-ground cutting methods that leave the root crown intact.	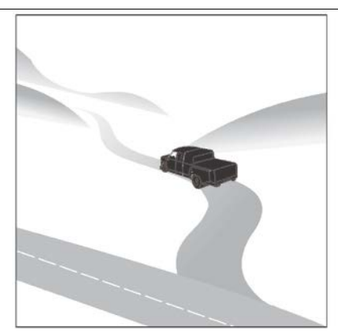 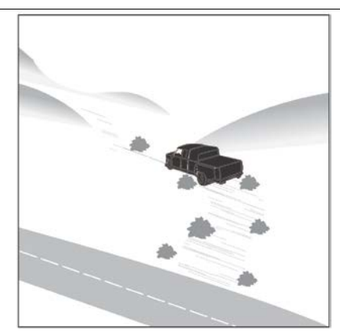	●	●	●	●	●	●		●	●	●	●	
					Overland access would avoid or minimize the removal of surface soil and vegetation, reducing the potential for erosion and loss of habitat. In addition, avoiding the construction of a new road would reduce the potential for increased traffic and the associated indirect effects.								

Table 2-11. SunZia Selective Mitigation Measures

Mitigation Measure	Mitigation Examples	Mitigation Application Phase: Engineering, Design, and Location	Mitigation Application Phase: Construction	Mitigation Application Phase: Operations	Mitigation Effectiveness: Water Resources: Streams/ Washes	Mitigation Effectiveness: Water Resources: Wetlands/ Springs	Mitigation Effectiveness: Earth Resources: Geology/ Soils	Mitigation Effectiveness: Earth Resources: Paleontology	Mitigation Effectiveness: Biological Resources: Sensitive Wildlife Species	Mitigation Effectiveness: Biological Resources: Sensitive Plant Species	Mitigation Effectiveness: Land Use	Mitigation Effectiveness: Visual Resources	Mitigation Effectiveness: Cultural Resources
4. All new access roads not required for maintenance would be permanently closed using the most effective and least environmentally damaging methods appropriate to that area (e.g., stock piling and replacing topsoil, or rock replacement), with concurrence of the landowner or appropriate land management agency. This would limit new or improved accessibility into the area.	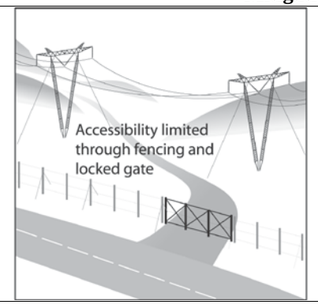 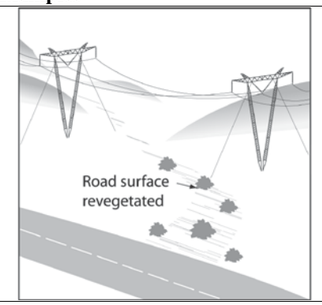		●	●	●	●	●		●	●	●	●	●
					Closing access roads where they are not needed after construction protects the resources in that area from further disturbance for reasons described in SE 1.								
5. In addition to standard reseeding and recontouring practices (see ST 8), a detailed Project reclamation plan would be developed to mitigate site-specific resource impacts.			●	●	●	●	●		●	●	●	●	
6. To minimize disturbance to sensitive habitats or resources, access roads required for operations purposes would be gated or otherwise blocked from public access. Fences would meet BLM or other applicable agency/owner specifications.			●	●					●	●	●		●
					Limiting access to sensitive areas would reduce the potential for indirect effects associated with increased traffic.								
7. Modified tower design or alternate tower type would be used to minimize ground disturbance, operational conflicts, visual contrast, and/or avian conflicts.	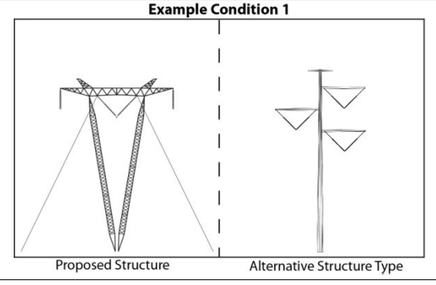 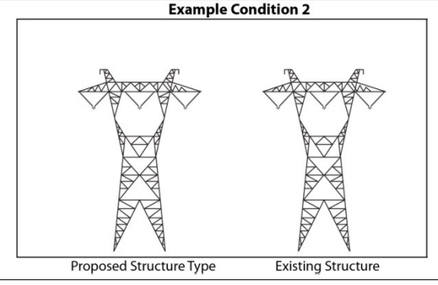	●	●	●					●		●	●	
					Flexibility in designing the tower or use of different tower types would allow tower structures to be adapted to specific site situations (i.e., Condition 1 – New Route, Condition 2 – Existing Corridor). For example, in areas where there are sensitive views and an existing transmission line, structures used for the Project would match the existing structures, minimizing visual contrast. Structures with perching opportunities for aerial predators where sensitive grassland species occur may be used.								

Table 2-11. SunZia Selective Mitigation Measures

Mitigation Measure	Mitigation Examples	Mitigation Application Phase: Engineering, Design, and Location	Mitigation Application Phase: Construction	Mitigation Application Phase: Operations	Mitigation Effectiveness: Water Resources: Streams/ Washes	Mitigation Effectiveness: Water Resources: Wetlands/ Springs	Mitigation Effectiveness: Earth Resources: Geology/ Soils	Mitigation Effectiveness: Earth Resources: Paleontology	Mitigation Effectiveness: Biological Resources: Sensitive Wildlife Species	Mitigation Effectiveness: Biological Resources: Sensitive Plant Species	Mitigation Effectiveness: Land Use	Mitigation Effectiveness: Visual Resources	Mitigation Effectiveness: Cultural Resources
8. In designated areas, structures would be placed so as to avoid, and/or to allow conductors to span sensitive features such as riparian areas, water courses, roads, trails, bat roosts, and cultural sites within limits of standard tower design. This would minimize the amount of sensitive features disturbed and/or reduce visual contrast.	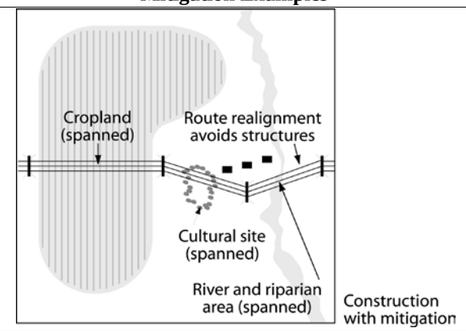	●			●	●	●		●	●	●	●	●
					Flexibility in the placement of structures allows for sensitive features to be avoided. Realigning the structures along a route or realigning the route can result in avoiding or minimizing direct impacts on resources, such as cultural and biological, as well as land uses such as agriculture, parks, preservation, hazardous substance remediation, and recreation areas.								
9. Standard tower design would be modified to correspond with spacing of existing transmission line structures where feasible, and within limits of standard tower design. The typical span would be modified to correspond with existing structures, but not necessarily at every location. This would reduce visual contrast and/or potential operational conflicts.	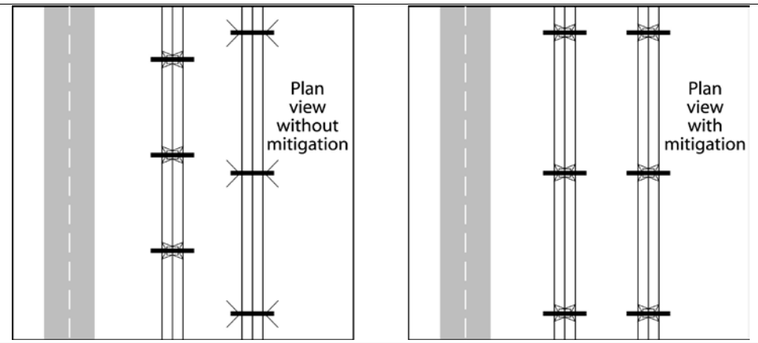	●							●		●	●	●
					Matching tower spacing with existing parallel lines reduces the visual space occupied by the structures and minimizes the amount of contrast between the man-made structures and the landscape.								
10. At highway, canyon, and trail crossings, structures are to be placed at the maximum distance practicable from the crossing to reduce visual impacts.	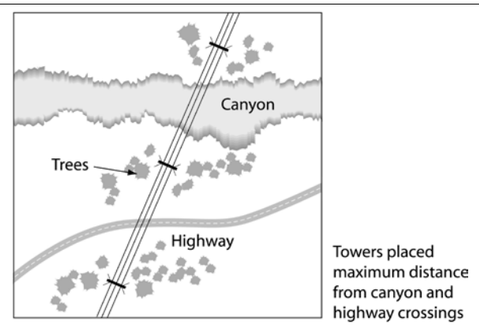	●									●	●	●
					Placing structures at a maximum distance from major or sensitive crossings (i.e., roads and trails) would reduce visual impacts and potential safety hazards (i.e., vehicle collision with tower).								

Table 2-11. SunZia Selective Mitigation Measures

Mitigation Measure	Mitigation Examples	Mitigation Application Phase			Mitigation Effectiveness								
					Water Resources		Earth Resources		Biological Resources				
		Engineering, Design, and Location	Construction	Operations	Streams/ Washes	Wetlands/ Springs	Geology/ Soils	Paleontology	Sensitive Wildlife Species	Sensitive Plant Species	Land Use	Visual Resources	Cultural Resources
11. To reduce visual contrast, mineral or asphalt emulsions (e.g., Permeon™ or approved equivalent) would be applied in rocky areas where newly exposed rock color would create strong landscape contrasts.	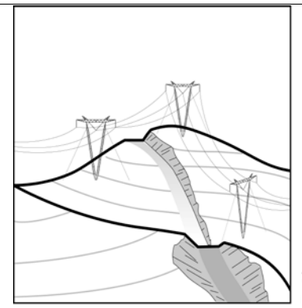 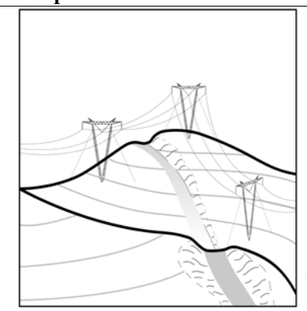	●	●									●	●
					The implementation of mineral or asphalt emulsions (e.g., Permeon™ or approved equivalent) would reduce the visual contrast between exposed ground and the surrounding environment. The application of this mitigation would be determined in the field, during or after construction, by the CIC and Authorized Officers.								
12. With the exception of emergency repair situations, right-of-way construction, restoration, maintenance, and termination activities in designated areas would be modified or discontinued during sensitive periods (e.g., nesting and breeding periods) for candidate, proposed threatened and endangered, or other sensitive animal species. Sensitive periods, species affected, and areas of concern would be approved in advance of construction or operations by the BLM Authorized Officer.	Construction activities suspended during sensitive breeding periods 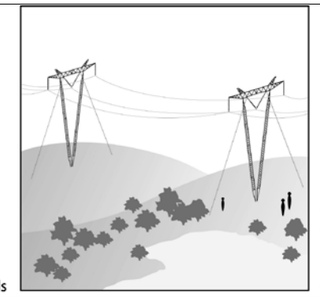 Construction activities resumed following calving perioc		●	●					●				
					Restricting construction activities or maintenance during breeding or nesting periods eliminates potential disturbance of wildlife during these critical periods of their life cycles.								
13. Helicopter placement of structures may be used to reduce ground disturbance (e.g., to minimize soil erosion, vegetation loss, and visual impacts) caused by permanent access road construction.	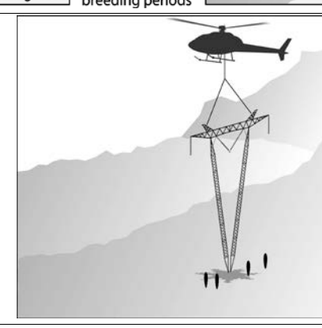		●				●	●	●	●	●	●	●
					Using helicopters to place structures in steep terrain or otherwise sensitive areas reduces land use and natural resource impacts that would otherwise result from ground-disturbing activities. The decrease of ground disturbance would reduce the loss of vegetation, soil erosion, potential damage to cultural resources, and visual impacts.								

Table 2-11. SunZia Selective Mitigation Measures

Mitigation Measure	Mitigation Examples	Mitigation Application Phase			Mitigation Effectiveness								
					Water Resources		Earth Resources		Biological Resources				
		Engineering, Design, and Location	Construction	Operations	Streams/ Washes	Wetlands/ Springs	Geology/ Soils	Paleontology	Sensitive Wildlife Species	Sensitive Plant Species	Land Use	Visual Resources	Cultural Resources
14. To minimize disturbance to riparian vegetation and woodlands, and to reduce visual contrast, clearing of trees in and adjacent to the right-of-way would be minimized to the extent practicable to satisfy conductor-clearance requirements (NESC and up to 10 years of timber growth). Trees and other vegetation would be removed selectively (e.g., edge feathering) to blend the edge of the right-of-way into adjacent vegetation patterns, as practicable and appropriate.	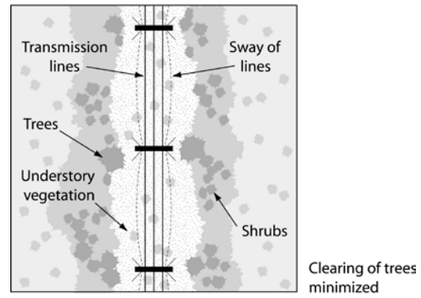		●						●		●	●	
					Selectively removing vegetation (i.e., trees) within and along the edges of the right-of-way reduces disruption of habitat, minimizes removal of timber resources, and reduces the visual contrast between the right-of-way and the surrounding environment. Furthermore, "feathering" the edges of the right-of-way instead of cutting trees and vegetation in a straight line results in a more gradual modification to the environment.								
15. To minimize bird collisions, bird diverters would be installed and maintained on groundwires, transmission lines, and/or guywires in areas of heavy bird use (i.e., Rio Grande and other riparian corridors). Groundwires would be replaced with one-inch diameter OPGWs to increase visibility where practicable and appropriate.	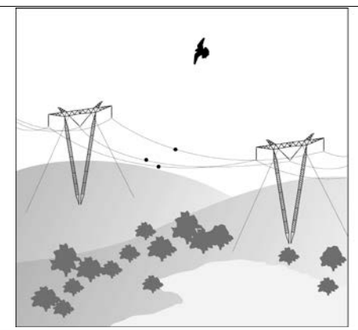		●	●					●				
					Conductor, groundwire or guywire markings on segments of the transmission lines that cross through, or are adjacent to, heavy bird migration corridors and/or habitat would minimize the risk of avian collision.								
16. To reduce ground disturbance and visual contrast, the separation between the transmission lines and existing utilities, roads, or railroads would be minimized to the extent practicable.	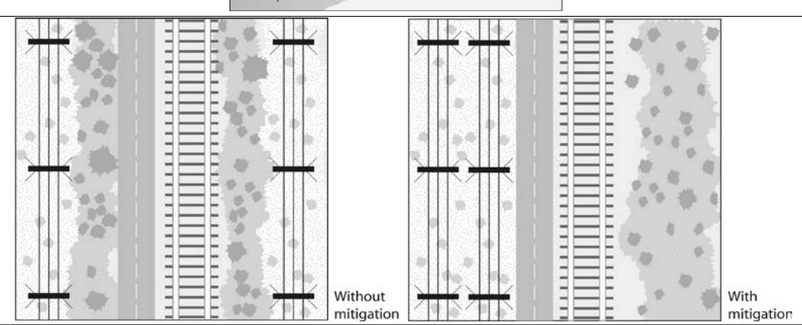	●							●		●	●	
					Consolidating the transmission lines with existing facilities such as roads, railroads, or other utilities (e.g., transmission lines, distribution lines, pipelines, etc.) would typically minimize ground disturbance, habitat fragmentation, and visual contrast. Furthermore, locating the transmission lines within designated utility corridors (where established) minimizes potential land use conflicts and other resource impacts.								

This page intentionally left blank.

2.5 COMPARISON OF ALTERNATIVES

This section of the document provides a detailed comparative analysis of each alternative. The Project alternatives have been divided into three route groups:

- Route Group 1: SunZia East Substation to Midpoint Substation (New Mexico)
  BLM Preferred Alternative: Subroute 1A2
- Route Group 3: Midpoint Substation to Willow-500 kV Substation (New Mexico and Arizona)
  BLM Preferred Alternative: Subroute 3A2
- Route Group 4: Willow-500 kV Substation to Pinal Central Substation (Arizona)
  BLM Preferred Alternative: Subroute 4C2c

Each route group is composed of individual alternative subroutes (Route Group 2 was eliminated from detailed analysis, as described in Section 2.3.3.1). Table 2-12 includes a comparison of land ownership, existing utility corridors, and potential temporary and permanent ground disturbance associated with each of the subroutes; Table 2-13, Table 2-14, and Table 2-15 include the comparison of resource impacts for alternative subroutes; and Figure 2-33, Figure 2-34, and Figure 2-35 illustrate the locations of key issue areas and alternatives.

The alternative subroutes within each route group are compared with respect to resource issues and impacts; the detailed analysis is described in Chapter 4 of this EIS. BLM VRM compliance and land use conformance, in addition to agency comments, have been considered in the comparison of alternatives. As stated in Section 2.6, the BLM preferred alternative would include amendments to RMPs for conformance with VRM and right-of-way management objectives. Land use plan amendments that may be required for the grant of right-of-way in order to conform to RMP management objectives have been identified.

2.5.1 Route Group 1: SunZia East Substation to Midpoint Substation

Each of the alternatives within Route Group 1 heads west or southwest from the proposed SunZia East Substation in Lincoln County, and crosses the Rio Grande before heading south to the Midpoint Substation near Deming, in Luna County. Subroutes 1A, 1A1, and 1A2 cross the Rio Grande at the north river crossing near Socorro, and the 1B subroutes (1B1, 1B2, 1B2a, and 1B3) cross the Rio Grande approximately 5 miles north of the Bosque del Apache NWR in the vicinity of San Antonio, New Mexico. Subroute 1A2 is the longest of Route Group 1 at 230.3 miles, and Subroute 1B3 the shortest at 206.3 miles.

Subroute 1A crosses approximately 104.9 miles of BLM land, with the remainder crossing state and private or other lands. The proposed Project right-of-way along Subroute 1A would be located adjacent to 93.7 miles of existing transmission lines; including portions of the DOE West-wide Energy Corridor following existing 345 kV and 115 kV lines in Socorro and Sierra counties. Subroute 1A is also adjacent to 10.0 miles of existing pipelines.

Subroutes 1A1 and 1A2 were identified as alternatives to Subroute 1A in order to avoid potential impacts to the viewshed south of Gran Quivira. A modification of the Subroute 1A1 alignment, identified as Subroute 1A2, was developed after the Draft EIS was published based on input from cooperating agencies (including the NPS and WSMR) to mitigate impacts to visual resources and military operations. Segments of subroutes 1A1 and 1A2, northwest of the proposed SunZia East Substation, are located approximately 4 miles north of Gran Quivira (links E84a, E84b, and E86a, in Torrance County); compared to Subroute 1A, which would include a segment located approximately 6 miles south (Link E80c, in Socorro County). Gran Quivira is an important cultural resource site associated with surrounding views of the landscape (see sections 3.8.4 and 4.9.3.1). The location of Subroute 1A1 to the north would be effective in reducing potential impacts to the Gran Quivira viewshed, as well as reducing potential conflicts with the military test profiles. Subroute 1A2 was added because it would further reduce impacts to the Gran Quivira viewshed and military testing, compared to Subroute 1A1. Two local alternative segments were also considered at intermediate locations between the northern (1A1 and 1A2) and southern (1A) alternatives, which would have greater levels of visual impact than Subroute 1A2 in this area. Subroute 1A2 falls within the existing study corridor that was developed for Subroute 1A1 in the Draft EIS, and the effects of the modified proposed action that have been documented in this Final EIS are within the range of effects analyzed in the Draft EIS. Therefore, the modification of the alternative route (from Subroute 1A1 to Subroute 1A2) is not a substantial change.

Subroute 1B1 heads west before turning south near the Sevilleta NWR and crossing the Rio Grande north of San Antonio. Subroute 1B2 takes a more southerly route before using the same San Antonio crossing as 1B1. Subroute 1B3 uses a route farther south than 1B2 (links A40, A41, and A80), before crossing the Rio Grande north of San Antonio and proceeding south to the Midpoint Substation.

Biological resource impacts in Route Group 1 would be associated with proposed transmission lines crossing the Rio Grande, as this area is an important migratory corridor for Sandhill Cranes, geese and other waterfowl, and numerous passerines. The Rio Grande corridor also contains critical habitat for the endangered Southwestern Willow Flycatcher and Rio Grande Silvery Minnow. A concern voiced by the USFWS Bosque del Apache NWR management, members of conservation groups, and bird watching enthusiasts, was that transmission lines may increase the risk of bird–power line collisions and avian mortality. Field studies were conducted to estimate the potential for avian collisions, which concluded that the potential for avian collisions with overhead transmission lines could be mitigated by increasing the visibility of the lines using diverters and OPGW. The potential for avian collisions would be comparable at either of the Rio Grande crossing alternatives, because the conditions at the north river crossing would be similar to the conditions at the San Antonio crossing. Removal of riparian vegetation may affect the critical habitat for Southwestern Willow Flycatcher, although the impacts would be greater at the San Antonio alternative crossing (1B subroutes) where there is a somewhat larger area of better quality habitat than at the northern Rio Grande crossing for Subroute 1A, 1A1, or 1A2.

Residential uses are concentrated near the Rio Grande and would not be directly affected by any of the alternatives; however, high visual impacts are expected for residences in the Socorro area for Subroute 1A, 1A1, or 1A2, and high visual impacts for residences in the San Antonio area would result for the 1B subroutes. All of the subroutes within Route Group 1 cross similar

amounts of Class A and B scenery, particularly at river crossing areas (see Section 3.9.1.2 for a definition of scenery classifications, and Section 4.9.2.1 for impacts and assessment techniques). Visual impacts to recreation and travel viewers would be lower for the 1B subroutes, compared to Subroute 1A, 1A1, or 1A2.

Portions of each of the alternatives in Route Group 1 do not conform to the Socorro, White Sands, or Mimbres RMP where the RMP objectives indicate right-of-way avoidance or VRM Class II or Class III areas. Subroute 1A2 crosses 21.3 miles of BLM right-of-way avoidance areas in three locations. The same areas would be indicated for Subroute 1A. The 1B subroutes cross between 10.9 miles and 13.9 miles of avoidance areas. Up to 14.1 miles of Subroute 1A2 do not conform to VRM objectives, somewhat more than the nonconforming portions of any of the 1B subroutes (up to 5.3 miles). The proposed RMP amendments would include a 400-foot-wide corridor to conform to the RMPs, subject to the BLM field office or district office decisions.

Overall, Subroute 1A, 1A1, or 1A2 would have potentially lower levels of impact to known cultural resources than the 1B subroutes. All subroutes in Route Group 1 are expected to have minimal impacts on population and housing, and would provide equivalent levels of employment and tax revenues. Subroutes 1A, 1A1, and 1A2 would have a low to moderate potential for affecting environmental justice populations (Socorro and Escondida communities), while the 1B subroutes could have slightly greater impacts (San Antonio community). All routes are expected to have low impacts with respect to climate and air quality, noise, public safety, hazardous materials, and cumulative effects.

Subroutes 1A1 and 1A2 also include a segment that crosses the I-25 from Socorro County into Sierra County, from the northwest to the southeast (Link A260). In comparison, subroutes 1A, 1B1, 1B2, and 1B3 include a segment located west of I-25 (Link A270) in that area. Although this particular segment of subroutes 1A1 and 1A2 would require two separate crossings over I-25, the visual impact would be lower for the segment because it would follow a 115 kV transmission line, compared to the segment west of I-25 that would require new access and be visible from the highway.

New access roads for the transmission lines would account for the majority of the ground-disturbing activities. The amount of ground disturbance is directly related to the length of any of the transmission line routes; permanent disturbance is estimated to be up to 5.5 acres per mile. The construction of new access roads and other areas could result in potential soil erosion/sedimentation to the Rio Grande and associated habitat, or to other drainage crossings. Such impacts would not be significant with regard to any of the alternatives, with the application of standard mitigation (e.g., BMPs and design to minimize vegetation loss). Because subroutes 1A, 1A1 and 1A2 would each be approximately 10 percent longer than the shortest of the alternatives in this group (Subroute 1B3), it is expected that the temporary and permanent ground disturbance would also be 10 percent greater.

2.5.2 Route Group 3: Midpoint Substation to Willow-500 kV Substation

Route Group 3 consists of subroutes 3A, 3A2, and 3B. While Subroute 3B takes a southern route near the communities of Deming, Lordsburg, and San Simon, Subroute 3A diverges north and

avoids potential impacts to those communities. Subroute 3A2 includes the majority of Subroute 3A, with a slight deviation to avoid the Hot Well Dunes Recreation Area, and terminates at the Willow-500 kV Substation.

Subroute 3A2 is approximately 123.9 miles in length and extends across 61.6 miles of BLM land and 50.8 miles of state land. At 128.6 miles, Subroute 3B is approximately 5 miles longer than Subroute 3A and extends along portions of an existing pipeline corridor between Deming, Lordsburg, and San Simon. Subroute 3B contains 56 miles of BLM land, while Subroute 3A has 58.1 miles of BLM land. The remaining lands are held by the state of New Mexico, the state of Arizona, or private landowners, with the DOD holding 0.3 mile of the Subroute 3B alignment.

Subroutes 3A and 3A2 cross 0.3 mile of a BLM right-of-way avoidance area, and Subroute 3B crosses 1.9 miles of avoidance areas in five locations. None of the subroutes in Route Group 3 would cause any direct residential conflicts. Regarding visual resources, Subroute 3B crosses more Class B scenery than Subroute 3A. Subroute 3A avoids visual impacts to residences near Deming, Lordsburg, and San Simon, whereas Subroute 3B has high to moderate-high visual impacts to these residential viewers. Subroute 3A2 would have similar visual impacts as Subroute 3A.

Subroute 3B parallels 24.1 miles of existing transmission lines and 74.2 miles of existing pipelines; Subroute 3A parallels 42.4 miles of transmission lines and 27.0 miles pipelines; and Subroute 3A2 parallels approximately 27 miles of existing pipelines and 42.4 miles of existing transmission lines. Due to the limited use of existing access, the amount of ground disturbance on subroutes 3A and 3A2 (5.4 acres per mile, 665 to 669 total acres respectively) would be greater than the amount on Subroute 3B (5.0 acres per mile total of 638 acres). However, Subroute 3B crosses the Lordsburg Playa where there is a high potential for soil erosion.

Subroute 3B would impact sensitive plants and invertebrates at the Lordsburg Playa. Arizona portions of Subroute 3B would have less impact than 3A or 3A2 to potential Chihuahua scurfpea habitat. Subroute 3B would have potentially lower impacts to cultural resources. In terms of socioeconomics, all of the subroutes are expected to have minimal impacts on population and housing. Subroute 3B could have potential environmental justice impacts in the vicinity of Deming and Lordsburg, New Mexico. No environmental justice effects are anticipated for subroutes 3A and 3A2.

Another important issue associated with this group of alternatives is the Hot Well Dunes Recreation Area, used primarily for off-highway vehicle (OHV) recreation and camping. Subroute 3A2 was added as a modification of Subroute 3A as it would avoid potential impacts to the Hotwell Dunes Recreation Area. In addition, all of the Route Group 3 subroutes cross the Continental Divide National Scenic Trail (CDNST), which is important for recreational and visual resource site. Notable historic sites within the Route Group 3 corridors include the Gila, Butterfield, and Janos Copper trails and the Shakespeare ghost town, south of Lordsburg.

Although subroutes 3A and 3A2 would require a greater amount of new access, Subroute 3B would have higher levels of visual impact where it crosses the Lordsburg Playa, as well as higher levels of impacts to residential viewers and VRM Class II areas southwest of Lordsburg.

Subroute 3B would also have higher visual resource impacts in the vicinity of San Simon, as well as impacts to wilderness characteristics of the Peloncillo Wilderness.

2.5.3 Route Group 4: Willow-500 kV Substation to Pinal Central Substation

Route Group 4 consists of subroutes 4A, 4B, 4C1, 4C2, 4C2a, 4C2b, 4C2c, and 4C3. Subroute 4A is located north of Mount Graham, while Subroute 4B is located in the Sulphur Springs Valley south and west of Mount Graham; the remaining subroutes are located in or near the San Pedro River Valley. Subroute 4C1 is east of the San Pedro River; subroutes 4C2, 4C2a, 4C2b, and 4C2c are located west of the San Pedro River; and Subroute 4C3 crosses the San Pedro River before following it through south and west Tucson. All subroutes end at the Pinal Central Substation site near Eloy, Arizona.

Subroutes 4A and 4B are similar in length, at 132.9 miles and 133.0 miles respectively. Subroute 4C1 is 139.0 miles long, 4C2 is 151.8 miles long, 4C2a is 137.8 miles long, 4C2b is 147.2 miles long, and 4C2c is 161.2 miles long. At 172.9 miles, Subroute 4C3 is the longest. None of the subroutes in this group contains a substantial amount of BLM land. Subroute 4C2c has the most BLM land, at 14.8 miles; Subroute 4C2a has the least, at 1.9 miles. The majority of land ownership for all subroutes in Route Group 4 is held by the ASLD (ranging from 110.9 miles [4A] to 128.8 miles [4C2c]), with smaller amounts owned by private landowners or by the BOR.

New access roads needed for construction and maintenance of the Project would account for the majority of the ground disturbing activities. The amount of estimated ground disturbance for seven of the eight subroutes is relatively similar and would vary from 5.7 to 6.0 acres per mile. However, ground disturbance for Subroute 4C3 would be lower (5.2 acres per mile), because much of it is already developed and would have existing access roads available.

Subroute 4C2c, the BLM preferred alternative, crosses ASLD lands located west of the San Pedro River that are leased for grazing and managed by Pima County. Alternative subroutes 4C2, 4C2a, and 4C2b cross the same ASLD lands. Within this group, only Subroute 4C1 would be subject to a BLM RMP amendment, as it crosses 1.4 miles of a right-of-way avoidance area (ACECs).

Subroute 4C3 would have high impacts to residential, commercial, and industrial properties in the Tucson area. Subroute 4C3 could result in the displacement of approximately 260 properties, including 216 residences (with local alternative F81a-F81b, 170 properties would be displaced). The highest levels of visual impacts would be associated with Subroute 4C3, where it passes through Tucson.

Subroutes 4C1, 4C2, 4C2a, 4C2b, and 4C2c would impact Class A and Class B scenery, as well as residential views along the San Pedro River. Likewise, subroutes 4A and 4B would impact views of scenery and residential viewers, especially residences near Safford. Subroutes 4C2b and 4C2c would have lower impacts to residential viewers in the vicinity of Cascabel than would 4C1, 4C2, or 4C2a.

All alternatives would cross Southwestern Willow Flycatcher designated critical habitat. The southernmost crossing of the San Pedro (Subroute 4C2b, 4C2c, or 4C3) would result in the least

impact to riparian habitat. Similar to Route Group 1, wintering Sandhill Cranes use a daily migration corridor between Willcox Playa and the Sulphur Springs Valley that would take them across the proposed transmission line (all subroutes except 4A). Subroutes 4A and 4B cross a roadless area north of the Galiuro Mountains and south of Aravaipa Creek, potentially allowing new vehicle access to recreationists. Although it would impact Cienega Creek, which provides habitat for several ESA-listed species, and riparian areas in the Santa Cruz River, Subroute 4C3 would have relatively fewer biological impacts because it passes through a large area of existing disturbance and development (Tucson and I-10 northwest of Tucson). Subroutes 4C1, 4C2, 4C2a, 4C2b, and 4C2c would affect Sonoran Desert Tortoise habitat in the San Pedro River Valley. Subroutes 4A, 4B, and 4C3 would affect considerably less Sonoran Desert Tortoise habitat.

Subroute 4A would have potential impacts to known archaeological districts in the Safford area, and Subroute 4B would have the least potential impact to known cultural resources. Subroute 4C1 (east of the San Pedro River) would potentially impact a higher number of known archaeological sites than subroutes 4C2, 4C2a, 4C2b, and 4C2c (west of the San Pedro River). Subroute 4C3 would have the highest level of cultural resource impacts, both known historic and prehistoric sites. There are several known historic and prehistoric cultural resources in the Tucson area (Subroute 4C3), including: historic districts, the Silverbell National Register of Historic Places (NRHP)-nominated site, the McClellan Wash Archaeological District, and the Southern Pacific, Juan Bautista de Anza, Gila, General Cooke's Wagon Road/Mormon Battalion, Butterfield, and Zuniga trails.

In terms of socioeconomics, all subroutes are expected to have minimal impacts on population and housing. The economic impacts would be similar for all of the alternatives and include employment gains and long-term tax revenues. Subroute 4C3 would likely have disproportionately high impacts on environmental justice populations in Tucson, due to numerous residential displacements. The other alternative subroutes within Route Group 4 would have low to moderate impacts on environmental justice populations in portions of Pinal County and the Willcox, Oracle, and San Manuel communities.

All routes are expected to have low impacts related to air quality, noise, public safety, and hazardous materials.

The alternative subroutes parallel to the existing TEP 345 kV lines (4C1, 4C2, 4C2a, 4C2b, 4C2c, and 4C3) cross portions of the Electronic Proving Ground, a DOD testing program area. The testing program maintains a background noise baseline measurement that could be potentially affected by the operation of new transmission lines; however, the effects have not been described or quantified.

2.5.4 Selection of the BLM Preferred Alternative

The BLM preferred alternative consists of the combination of three subroutes—**1A2, 3A2, and 4C2c—**one from each of the route groups 1, 3, and 4, for a total length of 515.4 miles.

The BLM preferred alternative route starts at the proposed SunZia East Substation in Lincoln County, New Mexico (Route Group 1), heads in a westerly direction into Torrance and Socorro

counties, and crosses the Rio Grande approximately 4 miles to the north of the town of Socorro. The route turns south, 9 miles west of the Rio Grande, along a 345 kV transmission line corridor into Sierra County, generally parallel to I-25 and the Rio Grande. The route continues south into Luna County along a 345/115 kV transmission line corridor, then turns west approximately 8 miles northeast of Deming at the proposed Midpoint Substation site. Continuing in a westerly direction (Route Group 3), the route crosses Grant and Hidalgo counties north of Lordsburg. The route continues west to the Arizona border. Crossing into Greenlee and Graham counties, the route continues west into the San Simon Valley, then proceeds west to the proposed Willow-500 kV Substation site located in Graham County. From the Willow-500 kV Substation (Route Group 4), the route heads southwest and crosses the Sulphur Springs Valley 7 miles north of Willcox, and continues along a 345 kV transmission line corridor, generally parallel to and north of the I-10. The route crosses the San Pedro River approximately 11 miles north of Benson, turns northwest, and continues at a distance ranging from 2 to 6 miles west of the San Pedro River through portions of Cochise and Pima counties. The route continues northwest along a pipeline corridor into Pinal County, turns west at a point 5 miles northwest of San Manuel, then proceeds westerly, north of Oracle and the Santa Catalina Mountains, and along portions of 115 and 500 kV transmission line corridors, north of the Tortolita Mountains. The route turns north from a point near the Tortolita Substation toward SR 79, and then west, north of the Picacho Mountains, to its termination at the Pinal Central Substation located 8 miles north of Eloy, in Pinal County.

This route was selected as the BLM preferred alternative because it would:

- maximize use of existing utility corridors and infrastructure
- minimize impacts to sensitive resources
- minimize impacts at river crossings
- minimize impacts to residential and commercial uses, and
- minimize impacts to military operations within the restricted airspace north of the WSMR

A major portion of the BLM preferred alternative would be constructed along established utility corridors where existing access is available. Approximately 53 percent (273.5 miles) of the route would be parallel to existing or designated utility corridors, including 228.7 miles parallel to existing transmission lines.

2.5.4.1 New Mexico

Although the preferred alternative **Subroute 1A2** is the longest route (230.3 miles) among the alternatives within Route Group 1, it has a greater proportionate length parallel to existing utility corridors (140.7 miles or 61 percent).

Subroute 1A2 was developed as a modification of the Subroute 1A1 alignment, after the Draft EIS was published based on input from the NPS and WSMR, to provide additional mitigation. The portion of the preferred route that extends northwest from the proposed SunZia East Substation through Lincoln, Torrance, and Socorro counties would have less potential visual and cultural resource impacts to Gran Quivira than the alternatives located to the south. The preferred route would also affect less of the restricted airspace north of the WSMR, and avoid potential impacts in proximity to the LC 94 missile launch facility.

At the Rio Grande, the level of impact resulting from construction and operation of the proposed transmission lines at the north river crossing near Socorro (Subroute 1A1, 1A2, or 1A), compared to the crossing near San Antonio (1B subroute group), would be lower with respect to visual and biological resources. Within the area along the river designated as Critical Habitat for Southwestern Willow Flycatcher and Rio Grande Silvery Minnow, the potential to impact suitable riparian habitat is lower at the north river crossing; the habitat quality is higher at the southern (San Antonio) crossing. Based on the information from the class I and II inventories conducted for this Project, cultural resource impacts would also be lower at the crossing near Socorro.

The preferred route through Sierra and Luna counties, south to the Midpoint Substation, in Luna County is primarily parallel to existing 345 and 115 kV transmission lines. Construction through these corridors would be achieved with a lower amount of new access road, resulting in less ground disturbance, lower potential vegetation loss and soil erosion, and lower levels of visual impact compared to the other alternatives. No significant impacts to other resources would be likely to occur.

The portion of preferred alternative **Subroute 3A2** that extends west from the proposed Midpoint Substation (also Subroute 3A) follows existing 345 kV transmission lines in Grant and Hidalgo counties, near the proposed Lordsburg Substation. Land use and visual resource impacts would be lower along this route than the alternative located south of the Lordsburg community (Subroute 3B). Based on the information from the class I and II inventories conducted for this Project, cultural resource impacts would also be lower.

2.5.4.2 Arizona

Preferred alternative **Subroute 3A2** crosses into Greenlee County and continues west, 5 miles north of the Peloncillo Mountains Wilderness area. The subroute continues west into Graham County, south of the BLM Hot Well Dunes Recreation Area, and into the proposed Willow-500 kV Substation. No significant impacts would be likely to occur along this portion of the preferred route.

Preferred alternative **Subroute 4C2c** follows a corridor containing two existing 345 kV transmission lines from the Willow-500 kV Substation, southwest into Cochise County and north of Willcox to the San Pedro River crossing. The proposed transmission lines would cross the San Pedro River within designated critical habitat for Southwestern Willow Flycatcher (Subroute 4C2c, also Subroute 4C2b and 4C3). The potential to impact suitable riparian habitat, land uses, and visual resources is lower at this river crossing, compared to the alternative river crossings to the north. Based on the information from the class I and II inventories conducted for this Project, cultural resource impacts would also be lower.

From the river crossing, the preferred route continues to the northwest, located between 2 and 6 miles west of the San Pedro River, crossing hilly, grazing lands. The route follows an existing pipeline through a portion of Pima and Pinal counties, then turns west at a point west of San Manuel, north of Oracle, and then follows existing 115 kV and 500 kV transmission lines toward the Tortolita Substation near I-10. The route continues north, and turns west to the north of the Picacho Mountains to the Pinal Central Substation.

With the exception of Subroute 4C3 (173 miles), the BLM preferred alternative is longer (161 miles) than the other alternatives within Route Group 4 (133 to 152 miles); it also has the greatest proportionate length parallel to existing transmission lines (72 miles, or 45 percent). Subroutes 4A and 4B are approximately 20 percent shorter than the BLM preferred alternative, generally resulting in 17 to 20 percent less ground disturbance. However, alternative subroutes 4A and 4B would require construction through areas where there is less existing access or other development. The construction of new transmission lines through relatively undeveloped areas could also cause cumulative impacts, such as the potential for habitat fragmentation and ground disturbance resulting from future access. Although these impacts could be reduced with effective mitigation measures, such as closing roads and restoring disturbed lands after construction, using corridors containing existing utilities and access for construction of new transmission lines would more likely reduce the potential for such impacts to occur.

This page intentionally left blank.

Table 2-12. Alternative Route Comparison

Group/Subroute	Length of Subroute (miles)	Land Ownership (miles crossed)					Utility Corridors Parallel[1] (miles)			Ground Disturbance			
										Temporary Disturbance		Permanent Disturbance	
		BLM	BOR	DOD	State	Private/ Other	Existing Transmission Lines	Existing Pipelines	Designated Utility Corridors	acres	acres/mile	acres	acres/mile
Route Group 1. SunZia East Substation to Midpoint Substation													
Subroute 1A. North River Crossing													
1A	219.5	104.9	—	—	44.6	70.0	93.7	10.0	19.9	1,739	7.9	1,196	5.4
1A1	228.8	110.1	—	—	39.7	79.0	114.1	18.5	36.4	1,813	7.9	1,238	5.4
1A2 – **BLM Preferred Alternative**	230.3	108.1	—	—	40.3	81.9	114.1	18.5	36.4	1,819	7.9	1,270	5.5
Subroute 1B. San Antonio Crossing													
1B1	223.6	114.0	—	—	45.2	64.4	79.6	10.0	9.0	1,772	7.9	1,189	5.3
1B2	209.2	120.2	—	—	37.7	51.3	79.6	—	9.0	1,657	7.9	1,121	5.4
1B2a	212.8	124.3	—	—	38.3	50.2	100	—	25.8	1,686	7.9	1,130	5.3
1B3	206.3	122.4	—	1.0	34.5	48.4	79.6	—	9.0	1,635	7.9	1,106	5.4
Route Group 3. Midpoint Substation to Willow-500 kV Substation													
Subroute 3A. North													
3A	123.4	58.1	—	—	53.8	11.5	42.4	27.0	—	978	7.9	665	5.4
3A2 – **BLM Preferred Alternative**	123.9	61.6	—	—	50.8	11.5	42.4	27.0	—	979	7.9	673	5.4
Subroute 3B. South													
3B	128.6	56.0	—	0.3	43.8	28.5	24.1	74.2	7.4	1,019	7.9	638	5.0
Route Group 4. Willow-500 kV Substation to Pinal Central Substation													
Subroute 4A. North of Mt. Graham													
4A	132.9	11.0	0.4	—	110.9	10.6	12.2	25.0	—	1,053	7.9	778	5.9
Subroute 4B. Sulphur Springs Valley													
4B	133.0	5.0	0.4	—	117.0	10.6	8.6	13.0	—	1,054	7.9	793	6.0
Subroute 4C. San Pedro Valley and Tucson													
4C1	139.0	5.3	0.4	—	112.1	21.2	31.0	34.9	—	1,101	7.9	802	5.8
4C2	151.8	14.8	0.4	—	118.8	17.8	54.9	20.2	—	1,203	7.9	870	5.7
4C2a	137.8	1.9	0.4	—	117.1	18.4	31	40.7	—	1,092	7.9	781	5.7
4C2b	147.2	1.8	0.4	—	127.1	17.8	48.3	40.7	—	1,166	7.9	839	5.7
4C2c – **BLM Preferred Alternative**	161.2	14.8	0.4	—	128.8	17.2	72.2	20.2	—	1,277	7.9	928	5.8
4C3	172.9	13.2	1.2	—	110.7	47.8	109.6	34.9	—	1,370	7.9	892	5.2
BLM Preferred Alternative Route. SunZia East Substation to Pinal Central Substation													
1A2, 3A2, 4C2c (combined)	**515.4**	**184.5**	**0.4**	**—**	**219.9**	**110.6**	**228.7**	**65.7**	**36.4**	**4,077**	**7.9**	**2,859**	**5.5**

Note: Totals may not sum, due to rounding.
[1] Total may include overlap of facilities.

Table 2-13. Resource Comparison Summary for Route Group 1: SunZia East Substation to Midpoint Substation

			Subroute 1A. North River Crossing			Subroute 1B. San Antonio Crossing			
			1A	1A1	1A2	1B1	1B2	1B2a	1B3
Subroute					(BLM Preferred Alternative)				
Length of Subroute (miles)			219.5	228.8	230.3	223.6	209.2	212.8	206.3
Land Ownership (miles)		BLM	104.9	110.1	108.1	114.0	120.2	124.3	122.4
		BOR	—	—	—	—	—	—	—
		DOD	—	—	—	—	—	—	1.0
		State – NM	44.6	39.7	40.3	45.2	37.7	38.3	34.5
		State – AZ	—	—	—	—	—	—	—
		Private/ Other	70.0	79	81.9	64.4	51.3	50.2	48.4
Total distance parallel to existing utilities and designated utility corridors (in miles)			113.5	140.7	140.7	98.6	89.6	99.5	88.6
Ground Disturbance	Temporary Disturbance	acres	1,739	1,813	1,819	1,772	1,657	1686	1,635
	Permanent Disturbance	acres	1,196	1,238	1270	1,189	1,121	1130	1,106
		acres per mile	5.4	5.4	5.5	5.3	5.4	5.3	5.4
BLM Resource Management Plan Conformance	VRM Compliance		• VRM plan nonconformance: - E101a: Class III (0.1 mile) – Socorro RMP, 2009 - E101b: Class II (5.5 miles) and Class III (3.9 miles) – Socorro RMP, 2009 - E133: Class II (2.4 miles) and Class III (2.2 miles) – Socorro RMP, 2009			• VRM BLM plan nonconformance: - A90: Class III (0.8 mile) – Socorro RMP, 2009			
						• VRM BLM plan nonconformance: - A111: Class II (2.2 miles) and Class III (0.3 mile) – Socorro RMP, 2009 - A112: Class II (1.6 miles) – Socorro RMP, 2009 - A140: Class II (0.4 mile) – Socorro RMP, 2009			
	BLM Plan ROW Avoidance Areas		• BLM plan nonconformance: - An avoidance area managed by Mimbres RMP for VRM Class II with links A440 and A530 for 0.9 mile and 1.9 miles						
			• BLM plan nonconformance: - An avoidance area managed by the Socorro RMP for VRM Class II is crossed by 5.8 miles of Link E101b, and 5.3 miles of Link E133; Link E211 crosses an avoidance area for 10.1 miles, and Link A161 crosses an avoidance area for 0.1 miles - An avoidance area managed by the Mimbres RMP for the Butterfield Trail is crossed by Link A440 for 0.9 mile.			• BLM plan nonconformance: - An avoidance area in the Socorro RMP managed for VRM Class II and the San Pedro SMA is crossed by Link A111 for 2.1 miles; links A112 and A140 cross the same avoidance area for 2.3 miles and 0.4 mile - An avoidance area in the Socorro RMP crossed by links A160 and A161 for 6.0 miles and 0.1 mile - An avoidance area managed by the Mimbres RMP for the Butterfield Trails is crossed by Link A440 for 0.9 mile			• Includes BLM plan nonconformance areas in Subroutes 1B1, 1B2, 1B2a, as well as: - An avoidance area in Socorro RMP crossed by Link A80 for 3.0 miles
			• Total BLM plan ROW avoidance nonconformance: 22.2 miles			• Total BLM plan ROW avoidance nonconformance: 11.8 miles			• Total BLM plan ROW avoidance nonconformance: 17.6 miles

Table 2-13. Resource Comparison Summary for Route Group 1: SunZia East Substation to Midpoint Substation

Subroute	Subroute 1A. North River Crossing			Subroute 1B. San Antonio Crossing			
	1A	1A1	1A2 (BLM Preferred Alternative)	1B1	1B2	1B2a	1B3
Agency Comments	• The DOD recommends that any route parallel or north of E80c (links E-81, E-82-E83-E85, and E82-E84-E85, portions of subroutes 1A, 1A1, and 1A2) is acceptable			• The DOD states that these alternatives would have an adverse effect on testing and training at WSMR			
	• NMDFG: impacts to migrating Sandhill Cranes, Snow Geese, and ducks • USFWS: negative effects on breeding, migratory, and wintering bird populations and compromise the establishment purpose of the Bosque del Apache National Wildlife Refuge.						
Land Use, Recreation, and Special Designations	• Crosses four BLM ROW avoidance areas – two south of the Sevilleta National Wildlife Refuge, one west of Socorro, and one north of Deming: links E101b, E133, E211, A161, A440 and A530	• Crosses four BLM ROW avoidance areas – two south of the Sevilleta National Wildlife Refuge, one west of Socorro, and one north of Deming: links E101b, E133, E211, A161, A440 and A530	• Crosses four BLM ROW avoidance areas – two south of the Sevilleta National Wildlife Refuge, one west of Socorro, and one north of Deming: links E101b, E133, E211, A161, A440 and A530	• Crosses four BLM ROW avoidance areas – three east and west of San Antonio (links A111, A112, A140, A160, and A161); and one north of Deming (links A440 and A530)			• Crosses four BLM ROW avoidance areas (links A80, A111, A112, A140, A160,and A161) east of San Antonio • Link A80 passes through a 1-mile-wide corridor through a BLM ROW exclusion area east of San Antonio along US Route 380
	- Crosses the Johnson (Gordy's) Hill SRMA (E133, E180), managed for OHV recreation uses						
Visual Resources	• *Scenery*: Crosses mostly Class B scenery along northern portion - E180: Crosses limited portion of Class A scenery associated with the Rio Grande • *Viewers*: High impacts are anticipated for Socorro residences (3.2 miles) - Greatest amount of high to moderate-high impacts for recreation and travel route viewers associated with Stallion WSA, Veranito WSA, Johnson (Gordy's) Hill SRMA, Rio Grande, and Quebradas Back Country Byway - This subroute would cross and parallel the El Camino Real National Scenic Byway, and El Camino Real de Tierra Adentro National Historic Trail resulting in high impacts; portions of the subroute crossing this scenic byway would be skylined - Low impacts are anticipated for Gran Quivira viewers, and this route would be viewed in context with other regional modifications (windfarm, pipeline, etc.)			• *Scenery*: This subroute crosses primarily Class B and C scenery - A140: Crosses limited portion of Class A scenery associated with the Rio Grande. - Contrast would be reduced at this crossing because riparian vegetation is less dense and not as tall as Subroute Group A crossing • *Viewers*: All subroutes in 1B would have high impacts for San Antonio residences (1.7 miles)			
				• *Scenery*: This subroute has fewer existing access roads than subroutes 1A and 1B1 for the northern portion • *Viewers*: Low to low-moderate impacts anticipated for Quebradas Backcountry Byway viewers - This subroute would generally parallel US Route 380 for 2 miles			• *Scenery*: This subroute has existing access and modifications along links A40, A41, and A80. - High impacts are anticipated where the subroute would cross and/or parallel portions of the El Camino Real National Scenic Byway - This subroute would generally parallel US Route 380 for 5 miles
				• *Viewers*: High impacts are anticipated where the subroute would cross and/or parallel portions of the El Camino Real National Scenic Byway		• *Viewers*: This subroute would avoid paralleling the El Camino Real National Scenic Byway; however, it would cross the scenic byway three times	
Biological Resources	• Bird collision risk is expected to be similar for all subroutes; mitigation would include bird diverters for increased visibility • All subroutes cross Southwestern Willow Flycatcher designated critical habitat at the Rio Grande • All subroutes cross the Chupadera Mesa BHCA						
	• Avoids ACEC for Desert Bighorn Sheep but crosses designated movement corridor • Crosses a 2010-foot wide strip of critical habitat for the Southwestern Willow Flycatcher			• Habitat for Fugate's blue star may be impacted • Riparian habitat at San Antonio Crossing is more suitable for Southwestern Willow Flycatcher, Yellow-billed Cuckoo than the habitat at the North River Crossing. This alternative would cross an area of critical habitat 5570 feet wide.			
	• Crosses extensive undeveloped area with dense junipers on Chupadera Mesa BHCA	• Uses much existing access through low-density juniper woodland on Chupadera Mesa BHCA	• Crosses extensive undeveloped area through low-density juniper woodland on Chupadera Mesa BHCA	• Uses the same links across Chupadera Mesa BHCA as Subroute 1A	• Crosses the narrowest portion of Chupadera Mesa BHCA	• Link A260 crosses areas with lower slopes than Link A270 (Subroute 1B2), also parallel to existing transmission lines	• Crosses low-density juniper woodland on Chupadera Mesa BHCA

Table 2-13. Resource Comparison Summary for Route Group 1: SunZia East Substation to Midpoint Substation

Subroute	Subroute 1A. North River Crossing			Subroute 1B. San Antonio Crossing			
	1A	1A1	1A2 (BLM Preferred Alternative)	1B1	1B2	1B2a	1B3
Earth and Water Resources	• Minerals: No key issues						
	• Soils: Fewer potential impacts to soils than the 1B subroutes			• Soils: wind erosive soils (A60, A90); issues with soils along Rio Grande (A112, A140)			• Soils: Least amount of mileage needing mitigation; issues with soils along Rio
	• Paleontology: 18 fossil localities within 1 mile of the centerline	• Paleontology: nine fossil localities within 1 mile of centerline along links A111 and A112	• Paleontology: nine fossil localities within 1 mile of centerline along links A111 and A112	• No key issues for paleontological resources			
	• Water: These subroutes would have similar impacts to stream crossings					• Link A260 is closer to Rio Grande then A270 of 1B2, and crosses several more intermittent streams as a result	• Water: Impacts slightly less due to fewer tributaries crossed
	• No key issues for geological hazards						
Cultural Resources	• Potential for visual/cultural impact: El Camino Real Tierra Adentro, Butterfield, Gila, and General Cooke's Wagon Road/Mormon Battalion trails • Potential impact to two known habitation sites						• Potential impacts to Mockingbird Gap Archaeological District
	• Potential visual impacts to the Gran Quivira				• Potential for visual/cultural impact: Less than 1 mile from Playas Pueblo Archaeological District		
Socioeconomics/ Environmental Justice	• Population: Minimal impacts expected during construction and operations • Housing: vacant, affordable units in proximity • Economics: Project would create approximately 1,400 jobs during construction and equivalent levels of tax resources benefitting affected counties.						
	• Lower potential impacts to EJ populations			• Potential low and moderate Environmental Justice impacts in proximity to the San Antonio community			
Air Quality	• All alternatives have potential to impact air quality during construction due to fugitive dust and equipment emissions relative to length of route • Does not traverse any nonattainment or maintenance areas						
Public Health, Noise, and Hazardous Materials	• All alternative subroutes carry the same risk of leaks during refueling or handling of chemicals, noise, or injury during construction • All alternative subroutes would have similar low levels of EMF exposure during operations						

Table 2-14. Resource Comparison Summary for Route Group 3: Midpoint Substation to Willow-500 kV Substation					
Subroute			**Subroute 3A. North**	**Subroute 3A2. North (BLM Preferred Alternative)**	**Subroute 3B. South**
Length of Subroute (miles)			123.4	123.9	128.6
Land Ownership (miles)		**BLM**	58.1	61.6	56.0
		BOR	—	—	—
		DOD	—	—	0.3
		State-NM	48.7	48.7	41.7
		State-AZ	5.1	2.1	2.1
		Private/ Other	11.5	11.5	28.5
Total distance parallel to existing utilities and designated utility corridors (in miles)			42.4	42.4	76.2
Ground Disturbance	**Temporary Disturbance**	**acres**	978	979	1019
	Permanent Disturbance	**acres**	665	673	638
		acres per mile	5.4	5.4	5.0
BLM Resource Management Plan Conformance	**VRM Compliance**		• Compliant with VRMs	• Compliant with VRMs	• BLM plan nonconformance: B112: Class II (0.8 mile) – Also associated with avoidance area, Mimbres RMP
	BLM ROW Avoidance Areas		• BLM plan nonconformance: - Avoidance areas in the Mimbres RMP crossed by Link B120b for 0.3 mile	• BLM plan nonconformance: - Avoidance areas in the Mimbres RMP crossed by Link B120b for 0.3 mile	• BLM plan nonconformance: - Avoidance areas in the Mimbres RMP, with Link B110a crossing an avoidance area for 0.3 mile - For 1.6 miles, Link B112 crosses an avoidance area
			• BLM plan nonconformance 0.3 mile	• BLM plan nonconformance 0.3 miles	• BLM plan nonconformance 1.9 miles
Agency Comments			• No applicable agency comments		
Land Use, Recreation Resources, and Special Designations			• Crosses one BLM ROW avoidance area (Link B120b) • Parallels approximately 42.4 miles of existing 345 kV transmission line • Potential access road restriction needed to Hot Well Dunes OHV Recreation Area	• Crosses one BLM ROW avoidance area (Link B120b) • Parallels approximately 42.4 miles of existing 345 kV transmission line	• Crosses three BLM ROW avoidance areas (links B110a and B112) • Parallels several pipelines which would allow for better construction access and follows portions of a BLM utility corridor (West-wide) • Crosses multiple residential areas
Visual Resources			• *Scenery*: Majority of route crosses Class C scenery with some areas of Class B scenery - Parallels more additional existing transmission lines than 3B • *Viewers*: This subroute avoids residences associated with San Simon, Lordsburg, and Deming - The northern portion of the Continental Divide Trail, a National Scenic Trail would be crossed by this subroute, but existing transmission lines and a substation are within close proximity	• *Scenery*: Majority of route crosses Class C scenery with some areas of Class B scenery - Parallels more additional existing transmission lines than 3B • *Viewers*: This subroute avoids the majority of residences associated with Deming - The northern portion of the Continental Divide Trail, a National Scenic Trail would be crossed by this subroute, but existing transmission lines and a substation are within close proximity	• *Scenery*: Majority of route crosses Class C scenery; however, this subroute crosses slightly more Class B scenery than Subroute 3A • *Viewers*: High to moderate-high impacts anticipated for residences near Lordsburg, San Simon, and Deming - This subroute would cross southern portion of Continental Divide Trail, but existing modifications and development are evident

Table 2-14. Resource Comparison Summary for Route Group 3: Midpoint Substation to Willow-500 kV Substation

Subroute	Subroute 3A. North	Subroute 3A2. North (BLM Preferred Alternative)	Subroute 3B. South
Biological Resources	• Avoids sensitive plant and invertebrate species at the Lordsburg Playa • May impact the Chihuahua Scurfpea, Sprague's Pipit, and the Arizona Striped Whiptail • Subroute would affect undisturbed habitat in the Peloncillo Mountains		• Crosses sensitive plant and invertebrate habitat at the Lordsburg Playa • May impact the Chihuahua Scurfpea, Sprague's Pipit, and the Arizona Striped Whiptail • Crosses Peloncillo Mountains parallel to an existing gas pipeline • Subroute would impact more previously disturbed habitat than Subroute 3A
Earth and Water Resources	• No key issues for soils, minerals, geologic hazards, or water resources		
	• Paleontology: Fossiliferous 111 Ranch Beds along Link B160		• Paleontology: Slightly fewer potential impacts with this route
Cultural Resources	• Crosses Gila, Butterfield, General Cooke's Wagon Road/Mormon Battalion, Janos Copper trails • Potential impacts to one known habitation site	• Crosses General Cooke's Wagon Road/Mormon Battalion, Janos Copper, and Gila trails; and crosses the Butterfield trail twice • Potential impacts to three known habitation sites	• Crosses Gila Trail twice, as well as General Cooke's Wagon Road/Mormon Battalion, Janos Copper, and Butterfield trails
Socioeconomic/ Environmental Justice	• Population: Minimal impacts expected for all routes within Route Group 3 • Housing: Minimal impacts expected, adequate vacant, affordable units available • Economics: Approximately 500 jobs in New Mexico could be created during construction of lines - Luna, Hidalgo, and Grant counties would benefit from tax revenues and job creation - Due to proximity to Arizona, some economic benefits could also result in this state • Approximately 270 jobs in Arizona could be created during the construction of the lines - Graham and Greenlee counties would benefit from tax revenues and job creation		
Air Quality	• All alternatives have potential to impact air quality during construction due to fugitive dust and equipment emissions relative to length of route • Does not traverse any nonattainment or maintenance areas		
Public Health, Noise, and Hazardous Material	• Each alternative subroute carries the same risk of leaks during refueling or handling of chemicals, noise, or injury during construction • Each alternative subroute would have similar low levels of EMF exposure during operations		

Table 2-15. Resource Comparison Summary for Route Group 4: San Pedro River and Tucson										
					Subroute 4C. San Pedro Valley and Tucson					
					4C1 East of San Pedro River	4C2 West of San Pedro River	4C2a West of San Pedro River	4C2b West of San Pedro River	4C2c West of San Pedro River	4C3 Tucson
Subroute			Subroute 4A. North of Mt. Graham	Subroute 4B. Sulphur Springs Valley					(BLM Preferred Alternative)	
Length of Subroute (miles)			132.9	133.0	139.0	151.8	137.8	147.2	161.2	172.9
Land Ownership		BLM	11.0	5.0	5.3	14.8	1.9	1.8	14.8	13.2
		BOR	0.4	0.4	0.4	0.4	0.4	0.4	0.4	1.2
		DOD	—	—	—	—	—	—	—	—
		State – NM	—	—	—	—	—	—	—	—
		State – AZ	110.9	117.0	112.1	118.8	117.1	127.1	128.8	110.7
		Private/ Other	10.6	10.6	21.2	17.8	18.4	17.8	17.2	47.8
Total distance parallel to existing utilities and designated utility corridors (in miles)			27.6	21.6	63.9	73.1	69.7	87.0	90.4	118.3
Ground Disturbance	Temporary Disturbance	acres	1053	1054	1101	1203	1092	1166	1277	1370
	Permanent Disturbance	acres	778	793	802	870	781	839	928	892
		acres per mile	5.9	6.0	5.8	5.7	5.7	5.7	5.8	5.2
BLM Resource Management Plan Conformance	VRM Compliance		• Compliant with VRMs							• VRM plan nonconformance: Link C817-Class III (0.5 mile), Phoenix RMP 1988
	BLM ROW Avoidance Areas		• Conforms to RMPs		• BLM plan nonconformance: - Safford RMP crossing an avoidance area with links C331 and C361 for 0.4 mile and 1.0 mile • Total BLM plan nonconformance: 1.4 miles	• Conforms to RMPs				

Table 2-15. Resource Comparison Summary for Route Group 4: San Pedro River and Tucson								
			Subroute 4C. San Pedro Valley and Tucson					
			4C1 East of San Pedro River	4C2 West of San Pedro River	4C2a West of San Pedro River	4C2b West of San Pedro River	4C2c West of San Pedro River	4C3 Tucson
Subroute	**Subroute 4A. North of Mt. Graham**	**Subroute 4B. Sulphur Springs Valley**					**(BLM Preferred Alternative)**	
Agency Comments	• USFWS: Conservation lands along the San Pedro River, riparian birds, and multiple threatened and endangered species							
	• AZGFD: May decrease wildlife and recreation values at Cluff Ranch	• AZGFD: Impact to Pronghorn, Ornate Box Turtles, and a Sandhill Crane migration corridor	• U.S. Army Fort Huachuca: Buffalo Soldier Electronic Proving Ground's baseline measurements would be potentially affected; however, effects have not been described or quantified					
			• Pima County requested that the County's preserved lands and grazing leases be avoided					• City of Tucson: Transmission lines could have detrimental impact on Tucson downtown area economic development process. Transmission lines conflict with recreation use and conservation at the (Santa Cruz) river corridor.
Land Use, Recreation Resources and Special Designations	• No direct impacts to residences, commercial, or industrial properties • Subroute 4A would cross platted residential subdivisions in the Safford area	• No direct impacts to residences, commercial, or industrial properties	• Crosses Muleshoe Ranch CMA ACEC for approximately 5.5 miles (links 301, C331, C361) • Crosses the Muleshoe EMA-ROW avoidance (links C331 and C361) • Crosses Swamp Springs-Hot Springs Watershed ACEC for approximately 1.4 miles (links C331 and C361) • Mitigation needed for agriculture and multiple residences along the San Pedro River.	• Crosses State Land – Pima County managed grazing leases (Six Bar Ranch, Link C450; and A7 Ranch, links C276, C441) • No direct impacts to residences, commercial, or industrial properties				• This route would displace over 200 residences, and additional commercial, and industrial properties • The local alternative (links 81a and 81b) impacts over 100 additional properties • Impacts recreation use in the Santa Cruz River corridor.

Table 2-15. Resource Comparison Summary for Route Group 4: San Pedro River and Tucson								
			Subroute 4C. San Pedro Valley and Tucson					
			4C1 East of San Pedro River	4C2 West of San Pedro River	4C2a West of San Pedro River	4C2b West of San Pedro River	4C2c West of San Pedro River	4C3 Tucson
Subroute	**Subroute 4A. North of Mt. Graham**	**Subroute 4B. Sulphur Springs Valley**					**(BLM Preferred Alternative)**	
Visual Resources	• *Scenery*: Crosses mostly high quality Class B scenery (i.e., San Pedro River Valley) with isolated areas of Class A scenery at the river - Modifications are limited to SR 77 and residences near Mammoth		• *Scenery*: Crosses mostly high quality Class B scenery on the east side of the San Pedro River Valley area - This subroute crosses Class A scenery associated with Desert Canyons and the San Pedro River - Crossing of San Pedro River is more compatible than other subroutes because it would be adjacent to the San Manuel Copper Mine • *Viewers:* Generally few dispersed residential viewers on this subroute - Would cross the Muleshoe Ranch CMA ACEC, Arizona Trail, and Pinal Pioneer Parkway - Dispersed recreation viewers in Redfield Canyon Wilderness may have views of the Project - Future residential development (Link C691) would have views of the subroute, which would parallel an existing pipeline	• *Scenery*: Crosses mostly high quality Class B scenery on the west side of the San Pedro River Valley area • *Viewers*: High impacts to residences near Cascabel with views of the San Pedro River crossing, - Few dispersed residences within 2 miles of San Manuel would have views of subroute - Subroute would cross the Arizona Trail, Pinal Pioneer Parkway, and Redington Road scenic routes - Residences near the Tortolita Substation would have views of this subroute where it parallels an existing transmission line		• *Scenery*: similar to Subroute 4C2 with the exception of the San Pedro River crossing		• *Scenery*: This subroute primarily traverses developed land associated with the Tucson Metropolitan Area - Generally, there are multiple existing transmission lines and other modifications associated with Class A scenery (San Pedro River/Riparian and the Cienega Creek Preserve) and Class B scenery • *Viewers*: Several existing residences have views of this subroute within immediate foreground distance zone - Subroute would traverse designated recreation areas and occur adjacent to the Juan Bautista de Anza National Historic Trail. It would also cross the Arizona National Scenic Trail
	• *Viewers:* High impacts are anticipated for residences within 0.5 mile to 1 mile - High to moderate-high impacts for residences near Artesia - High impacts to the following scenic travel routes: the Pinal Pioneer Parkway, Swift Trail Parkway, and Stockton Pass Road - High impacts to recreation viewers of the Arizona Trail and Rug Road	• *Viewers* – High to moderate-high impacts to are anticipated for residences within 0.5 mile to 1 mile - Moderate to low-moderate impacts anticipated for Sulphur Springs Valley dispersed residences - High impacts to these scenic travel routes the Pinal Pioneer Parkway and Stockton Pass Road - Similar to 4A, the Arizona Trail and Rug Road would also be impacted		• This subroute crosses Class A scenery (San Pedro River and a small portion of Desert Canyon) • Generally more existing access along the west side of the valley, and this subroute would parallel existing pipeline (Link C450)	• Similar to Subroute 4C1, existing residences (near Pinal Central Substation) and future residential development (Link C691) would have views of the subroute within 0.5 mile; however, it would parallel an existing pipeline	• *Viewers*: Few residences near the San Pedro River crossing would have views of the subroute; and the route would be viewed in context with two existing 345 kV transmission lines - High impacts to recreation viewers of the Arizona Trail which would be crossed - With the exception of the river crossing, viewers associated with this subroute are similar to 4C2a - This subroute would cross the San Pedro River near two existing 345 kV transmission lines		

Table 2-15. Resource Comparison Summary for Route Group 4: San Pedro River and Tucson

Subroute	Subroute 4A. North of Mt. Graham	Subroute 4B. Sulphur Springs Valley	Subroute 4C. San Pedro Valley and Tucson					
			4C1 East of San Pedro River	4C2 West of San Pedro River	4C2a West of San Pedro River	4C2b West of San Pedro River	4C2c West of San Pedro River (BLM Preferred Alternative)	4C3 Tucson
Biological Resources	• Portion of subroute north of Pinaleño Mountains has few unique biological impacts	• Northern Sulphur Springs Valley is Pronghorn habitat in large, intact grassland • Arizona Striped Whiptail habitat north of Willcox • Potential bird collision risk north of Willcox	• Designated critical habitat for three ESA-listed fish in Hot Springs and Redfield canyons upstream from crossing locations • 1139 acres of total ground disturbance and 42.0 miles of new access within Desert Tortoise habitat. • Avoids Pima County preserves • San Pedro River crossing is adjacent to planned transmission line; increased visibility may help reduce bird collisions • Impacts to riparian vegetation at the San Pedro River crossing • Crosses a 2380-foot wide strip of critical habitat for the Southwestern Willow Flycatcher on the San Pedro River	• 1210 acres of total ground disturbance and 33.7 miles of new access within Desert Tortoise habitat. • Tucson Shovel-nosed Snake may be present near Tortolita Substation	• 1109 acres of total ground disturbance and 34.4 miles of new access within Desert Tortoise habitat.	• 1227 acres of total ground disturbance and 41.0 miles of new access within Desert Tortoise habitat.	• 1329 acres of total ground disturbance and 40.3 miles of new access within Desert Tortoise habitat. • Tucson Shovel-nosed Snake may be present near Tortolita Substation • Crosses designated critical habitat for the Southwestern Willow Flycatcher	• Generally fewer impacts, as area has extensive modification and urban areas • Several special-status species are present in the Cienega Creek Preserve • Pima pineapple cactus may be present near Tucson • Low amount of Desert Tortoise habitat affected - 789 acres of total ground disturbance and 20.6 miles of new access. • Tucson Shovel-nosed Snake may be present near Tortolita Substation • Impacts to riparian vegetation at San Pedro River crossing and Cienega Creek • Designated critical habitat for Gila Chub at Cienega Creek
	• Crossings of dry reaches of Aravaipa Creek and San Pedro River • Crossing of Galiuro Mountains would affect large area with steep terrain, no existing access • Crosses a 4380-foot-wide strip of critical habitat for the Southwestern Willow Flycatcher on the San Pedro River • Lowest amount of Desert Tortoise habitat affected - 661 acres of total ground disturbance and 21.6 miles of new access • May affect Acuña cactus			• Riparian habitat at San Pedro River crossing is similar to Subroute 4C1, but Subroute 4C2 lacks disturbance associated with mine and planned transmission line				
				• Crosses a 2930-foot-wide strip of critical habitat for the Southwestern Willow Flycatcher on the San Pedro River		• River crossing is lowest sensitivity on San Pedro River, but this subroute is longer than Subroute 4C2 and would require much additional ground disturbance		

Table 2-15. Resource Comparison Summary for Route Group 4: San Pedro River and Tucson								
			Subroute 4C. San Pedro Valley and Tucson					
			4C1 East of San Pedro River	4C2 West of San Pedro River	4C2a West of San Pedro River	4C2b West of San Pedro River	4C2c West of San Pedro River	4C3 Tucson
Subroute	**Subroute 4A. North of Mt. Graham**	**Subroute 4B. Sulphur Springs Valley**					**(BLM Preferred Alternative)**	
Earth and Water Resources	• Minerals: Active mines and claims (C170, C173, and C592) • Soils: Less erosion and less farmland (only along B153a) • Hazards: Fewer geological hazards; fissures are located near Pinal Central Substation • Paleontology: Fewer impacts to paleontology	• Segment between Aravaipa Canyon and Safford has greater geological hazards; fissures are located near Pinal Central Substation • Minerals: Active mines and claims (C170, C173, and C592) • Soils: Erosive soils in Sulphur Springs Valley (C130b)	• Minerals: Active mines and claims (C510) • Soils: Erosive soils in San Pedro River Valley (C660) • Water: Subroute 4C1 has fewer washes and tributaries than Subroute 4C2; parallels San Pedro River • Fissures are located near Pinal Central Substation	• Minerals: No key issues • Has slightly more geological hazards; fissures are located near Pinal Central Substation • Links C441 and C450 may cross fossiliferous Quiburis Formation • Parallels San Pedro River				• Minerals: Mining claims along C820 • Soil: farmable soils (F510 and F540); less ground disturbance to erosive soils (F40a, F112, and F510); • Hazards: Santa Cruz River floods • Paleontology: Young sediment, less chance of fossils • Water: Numerous wells, Tucson Sole Source Aquifer - Parallels Santa Cruz River
		• No key issues for paleontological resources		• Soils: Erosive soils in San Pedro River Valley (C266, C276, and C441)	• Erosive soils in San Pedro River Valley (C450 and C661)	• Erosive soils in San Pedro River Valley (C450 and C661) • Crosses different perennial and intermittent streams than 4C2, but impacts are similar		
Cultural Resources	• Crosses Southern Pacific Mail Line, Butterfield Trail, and Zuniga Trail							• High density of resources, less than 0.5 miles from known historic districts • Potential impacts to eight known habitation sites • Crosses Gila, General Cooke's Wagon Road/Mormon Battalion, Butterfield, and Zuniga trails • Potential cultural-visual impacts to the McClellan Wash Archaeological District • Potential cultural-visual impacts to the Colossal Cave Mountain Park Natural Landmark, Juan Bautista de Anza
	• Potential impacts to five known habitation sites • Potential visual impacts to Oak Draw Archaeological District and Marijilda Canyon Archaeological District		• Potential impacts to four known habitation sites	• Potential impacts to one known habitation sites • Potential cultural-visual impacts to the McClellan Wash Archaeological District			• Potential impacts to two known habitation sites • Potential cultural-visual impacts to the McClellan Wash Archaeological District	
	• Concerns identified by San Carlos Apache Nation and other Apache Tribes for Mt. Graham and other culturally-sensitive areas							

Table 2-15. Resource Comparison Summary for Route Group 4: San Pedro River and Tucson

Subroute	Subroute 4A. North of Mt. Graham	Subroute 4B. Sulphur Springs Valley	Subroute 4C. San Pedro Valley and Tucson					
			4C1 East of San Pedro River	4C2 West of San Pedro River	4C2a West of San Pedro River	4C2b West of San Pedro River	4C2c West of San Pedro River (BLM Preferred Alternative)	4C3 Tucson
Socioeconomic/ Environmental Justice	• Population: Minimal impacts expected during construction and operations • Housing: vacant, affordable units in proximity • Economics: Construction of each alternative subroute would create approximately 1,000 jobs							
	• Low to moderate impacts expected to result to environmental justice populations in Pinal County near the Pinal Central Substation and in Cochise County north of Willcox			• Low to moderate impacts to environmental justice populations in Oracle and San Manuel				• High, disproportionate impacts to environmental justice populations - Approximately 216 residences could be taken as part of the right-of-way acquisition
Air Quality	• All alternatives have potential to impact air quality during construction due to fugitive dust and equipment emissions relative to length of route.							
	• Traverses San Manuel SO2 maintenance area							• Traverses Tucson/Pima County CO maintenance area • Traverses Rillito PM10 nonattainment area
Public Health, Noise, and Hazardous Material	• All alternative subroutes carry the same risk of leaks during refueling or handling of chemicals, noise, or injury during construction • All alternative subroutes would have similar low levels of EMF exposure during operations							

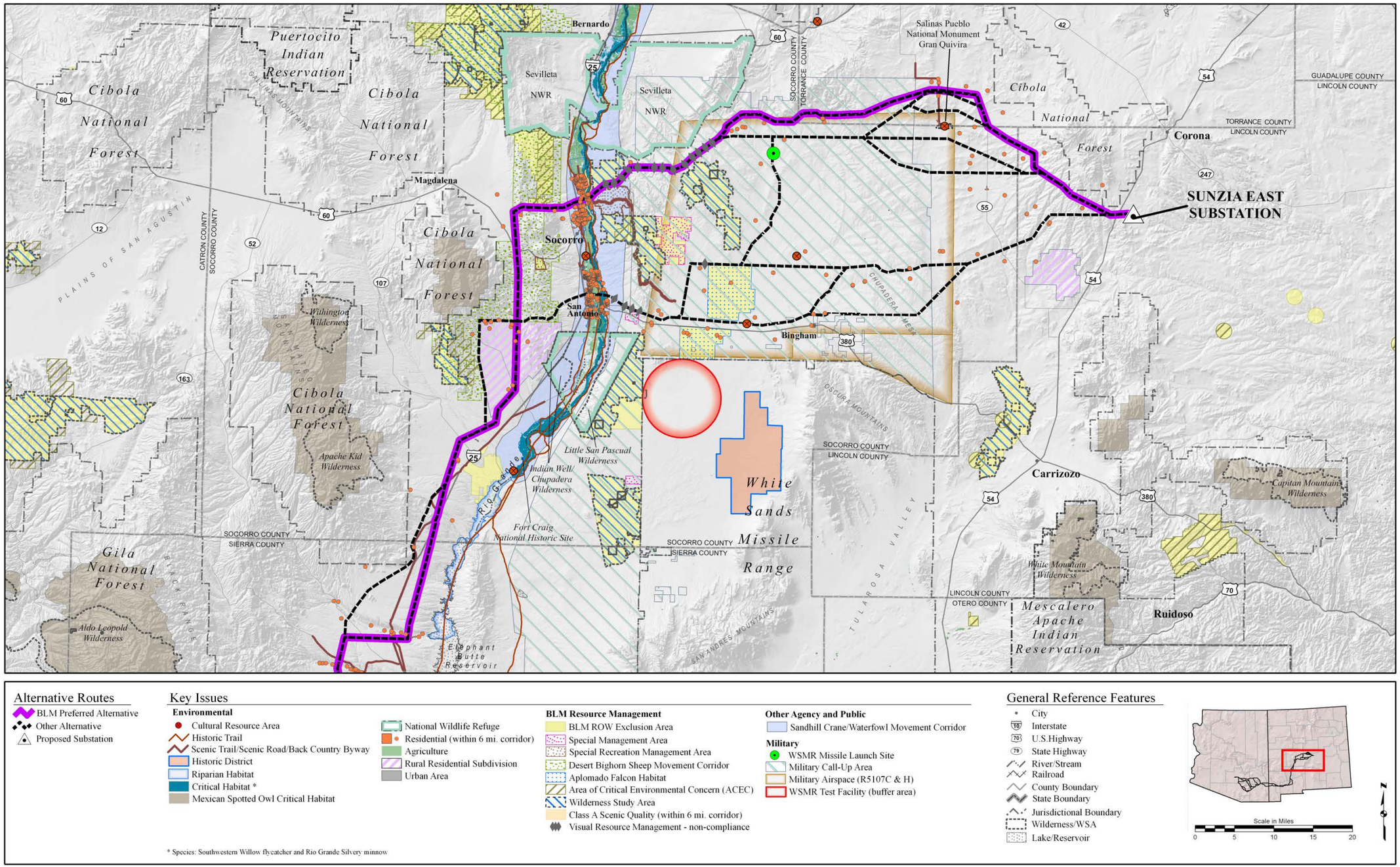

Figure 2-33. Key Issue Areas – Route Group 1

This page intentionally left blank.

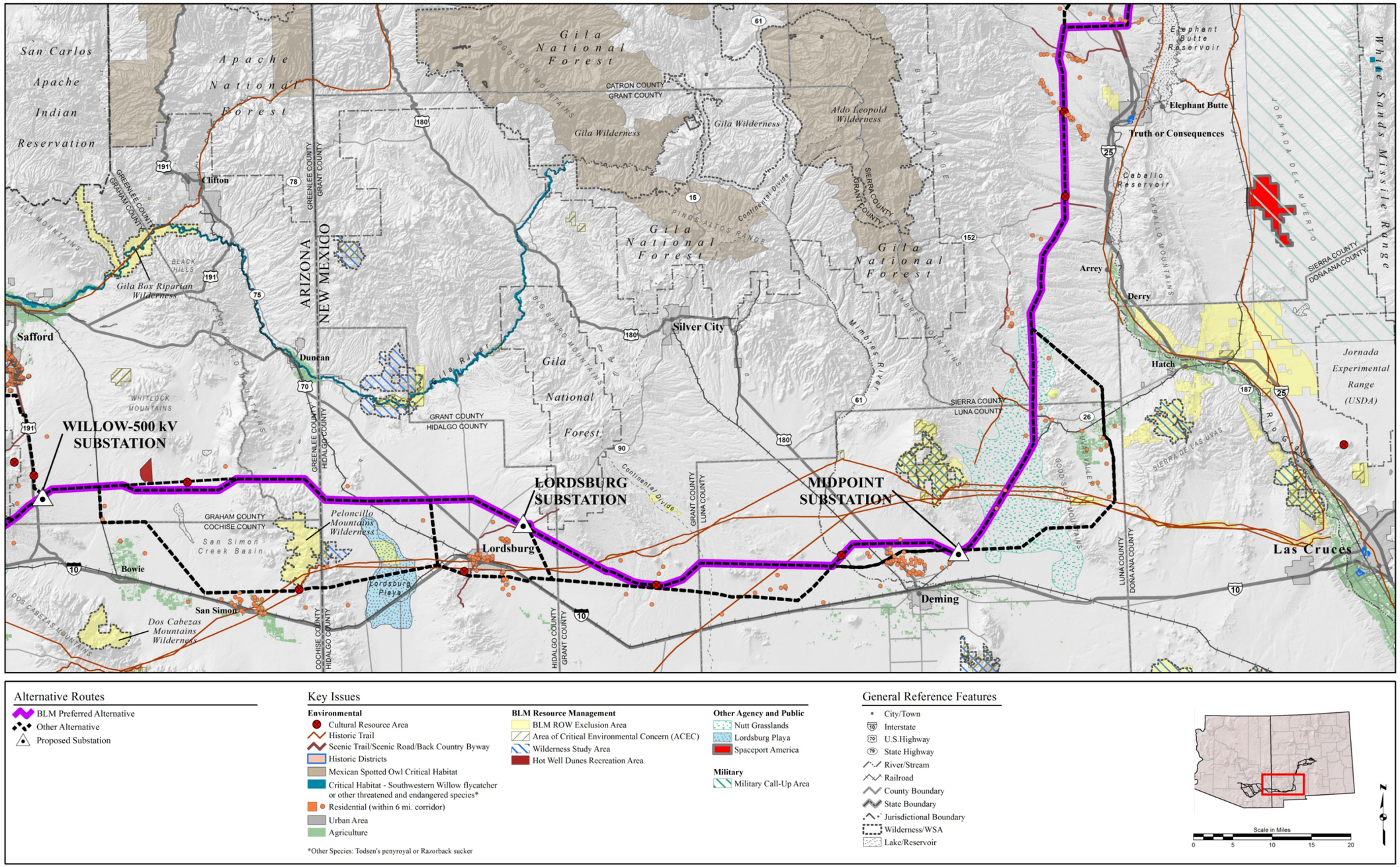

Figure 2-34. Key Issue Areas – Route Group 3

This page intentionally left blank.

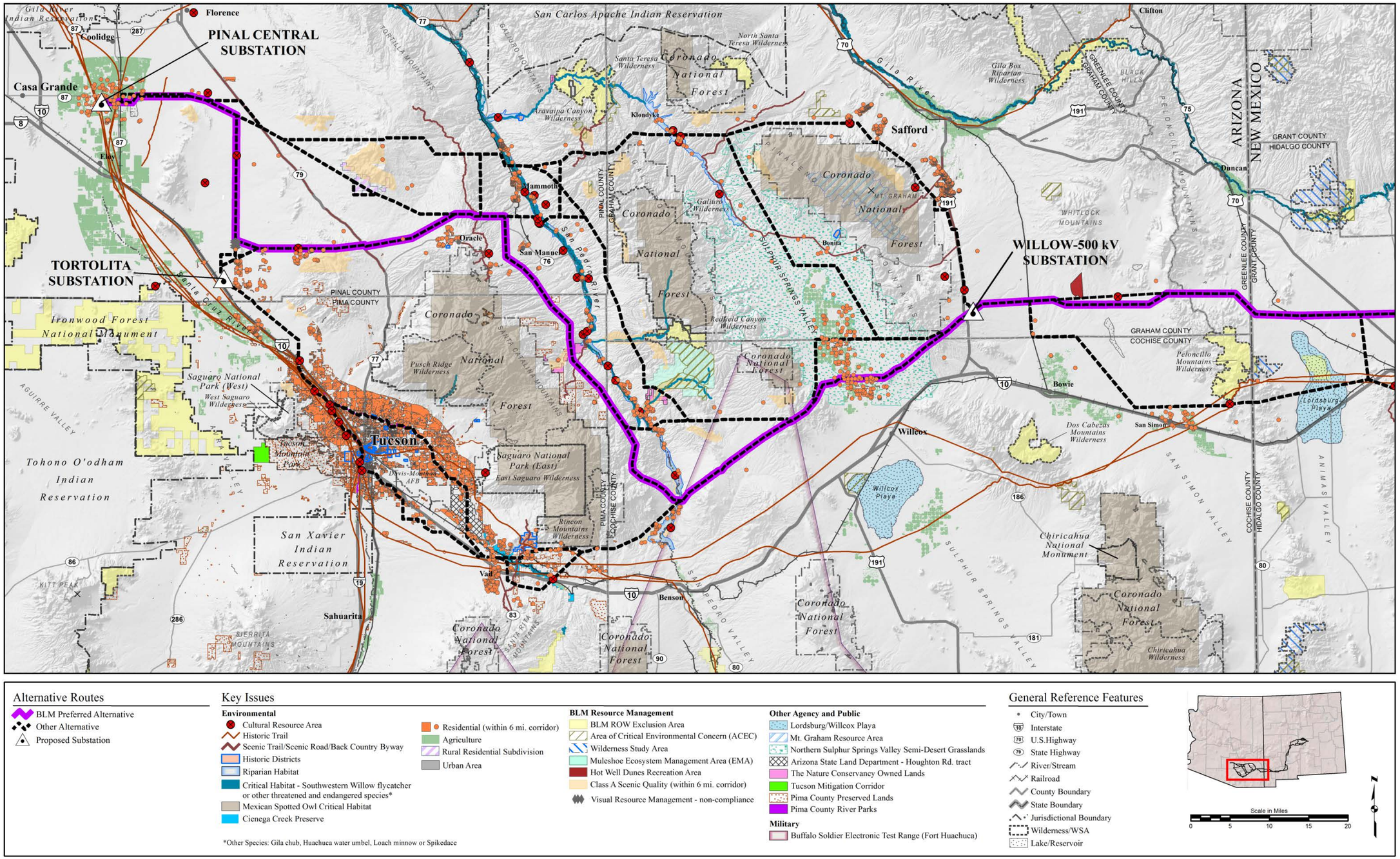

Figure 2-35. Key Issue Areas – Route Group 4

This page intentionally left blank.

2.6 PROPOSED PLAN AMENDMENTS

As described in Chapter 1, Section 1.11, alternatives have been evaluated for conformance with existing BLM RMPs.

In each of the plan amendment locations, the construction and operation of the proposed SunZia transmission line alternatives would not conform to the RMP due to either one of the following conditions: the right-of-way would cross an area designated in the RMP as right-of-way avoidance, or the proposed Project would not comply with VRM objectives. Plan amendments would be required for alternatives where no conforming alternatives could be developed that would meet the purpose and need of the Project.

In addition to the alternative transmission line routes, three plan amendment alternatives have been identified for each of the affected RMPs, as follows:

No Action: If no action is taken, then the right-of-way for the Project would not be granted and no amendment to the affected RMP would be necessary.

Corridor[1] – 400 feet (BLM preferred plan amendment alternative): The affected RMP would be amended to designate a 400-foot-wide corridor that would include the proposed SunZia transmission line right-of-way, and other future rights-of-way, through the BLM right-of-way avoidance areas. The VRM objective would be modified to Class IV within the corridor.

Corridor[1] – 2,500 feet: The affected RMP would be amended to designate a 2,500-foot-wide corridor that would include the proposed SunZia transmission line right-of-way and other future rights-of-way, through the BLM right-of-way avoidance areas. The VRM objective would be modified to Class IV within the corridor.

The corridor alternatives were identified in order to evaluate the environmental effects that would result from a reasonable range of plan amendment alternatives. It is assumed for purposes of this analysis that additional transmission lines or pipelines could be built within a common corridor with sufficient separation between facilities. The nominal 400-foot width would allow a nonexclusive right-of-way for the Project and potentially other additional rights-of-way within the corridor. The width of 2,500 feet represents a typical corridor designation on BLM land and would accommodate multiple rights-of-way for facilities. Minor deviations from the limits of the corridor may be required to accommodate site-specific considerations, and any new rights-of-way would be subject to case-by-case evaluations according to future project applications.

Impacts associated with the plan amendment alternatives are described in Chapter 4. Direct and indirect effects of the Project have been described in the resource sections (4.2 through 4.15). Impacts resulting from corridor plan amendments, including impacts of additional rights-of-way and facilities, are documented in Section 4.18.

The BLM preferred alternative includes proposed plan amendments to the Socorro and Mimbres RMPs for specific corridor locations along the BLM preferred route. The BLM preferred plan

[1] A corridor is defined in BLM Manual 2800 as "a tract of land forming a passageway for linear utilities or transportation uses." Note: The "study corridors" as defined in this EIS are resource-specific and vary between 1,200 feet and 6 miles wide.

amendment alternative is the 400-foot-wide corridor that may be included as an amendment to RMPs for conformance with VRM and right-of-way management objectives. For the proposed action, including alternatives, the following RMPs in New Mexico and Arizona would be subject to amendment:

- Socorro RMP, Socorro Field Office (2010) – BLM preferred alternative
- Mimbres RMP, Las Cruces District Office (1993)) – BLM preferred alternative
- Final Safford District RMP and EIS, Safford District Office (1991)

No amendments to the RMPs in Arizona would be required for the BLM preferred alternative route. Right-of-way avoidance area locations are described in Section 3.10.3.7, VRM classifications are shown in Section 3.9.3, and the analysis of plan amendment alternatives can be found in Section 4.18. The locations of the proposed plan amendments for the BLM preferred alternative are described as follows and are presented on Figure 2-36 through Figure 2-38.

2.6.1 Socorro RMP: Proposed Plan Amendment

For the Socorro RMP, the BLM preferred alternative would affect 384 acres of VRM Class II lands and 295 acres of VRM Class III lands, resulting in nonconformance due to project contrast that would range from strong to moderate/strong along links E101b and E133. The proposed plan amendment would result in a reduction of VRM Class II lands by 0.07 percent and a reduction of VRM Class III lands by 0.06 percent, while VRM Class IV lands would increase by 0.13 percent. Table 2-16 provides a summary of the effects of the proposed plan amendments for VRM conformance within the Socorro Field Office area for the BLM preferred alternative.

Table 2-16. Proposed Plan Amendments – VRM Classifications

Links with VRM Nonconformance (Socorro Field Office, Subroute 1A2)	VRM Classifications within Proposed Plan Amendment Areas for Socorro RMP				VRM Classification Total Change
	Proposed Plan Amendment Area within 400-foot-wide Corridor (acres)	VRM Classifications		Resource Change by Link	
		Socorro RMP Existing VRM Class	Proposed Plan Amendment VRM Class		
E101b	267	Class II	Class IV	Class II: Reduced by 0.05% Class IV: Increased by 0.05%	Class I: Existing 28,718 acres No Change Class II: Existing 510,945 acres Reduced by 383 acres (0.07%) Class III: Existing 448,612 acres Reduced by 294 acres (0.06%) Class IV: Existing 517,330 acres Increased by 681 acres (0.13%)
	189	Class III	Class IV	Class III: Reduced by 0.04% Class IV: Increased by 0.04%	
E133	116	Class II	Class IV	Class II: Reduced by 0.02% Class IV: Increased by 0.02%	
	107	Class III	Class IV	Class III: Reduced by 0.02% Class IV: Increased by 0.02%	

Right-of-way plan amendments would also be required for the Socorro RMP for locations along links A161, E101b, E133, and E211 where the BLM preferred alternative would cross right-of-way avoidance areas. A total of 1,022 acres of avoidance areas would be removed from these lands in the Socorro Field Office for the BLM preferred alternative; a reduction of 1.9 percent. Table 2-17 provides a summary of the effects of the proposed plan amendments for right-of-way avoidance within the Socorro Field Office area for the BLM preferred alternative.

Table 2-17. Proposed Plan Amendments – Right-of-Way Avoidance

BLM Resource Management Plan	BLM Preferred Alternative: Links within Right-of-Way Avoidance Areas	Plan Amendment Change for 400-foot-wide Corridor (acres)	Right-of-Way Avoidance Total Change
Socorro RMP (Subroute 1A2)	A161/E211	495	Existing Right-of-Way Avoidance Area 52,583 acres Reduced by 1,033 (1.9%)
	E101b/E133	538	

2.6.2 Las Cruces District Office, Mimbres RMP: Proposed Plan Amendment

For the Mimbres RMP, right-of-way plan amendments would be required for links A440, A530, and B120b where the BLM preferred alternative would cross designated avoidance areas. A total of 188 acres would be removed from lands within the Las Cruces District Office area for the BLM preferred alternative; a reduction of 1.9 percent. Table 2-18 provides a summary of the effects of the proposed plan amendments for right-of-way avoidance within the Las Cruces District Office area for the BLM preferred alternative.

Table 2-18. Proposed Plan Amendments – Right-of-Way Avoidance Mimbres RMP

BLM Resource Management Plan	BLM Preferred Alternative: Links within Right-of-Way Avoidance Areas	Plan Amendment Change for 400-foot-wide Corridor (acres)	Right-of-Way Avoidance Total Change
Mimbres RMP, Las Cruces District (Subroute 1A2 and 3A2)	A440	87	Existing Right-of-Way Avoidance Area 9,899 acres Reduced by 194 acres (2.0%)
	A530	92	
	B120b	15	

This page intentionally left blank.

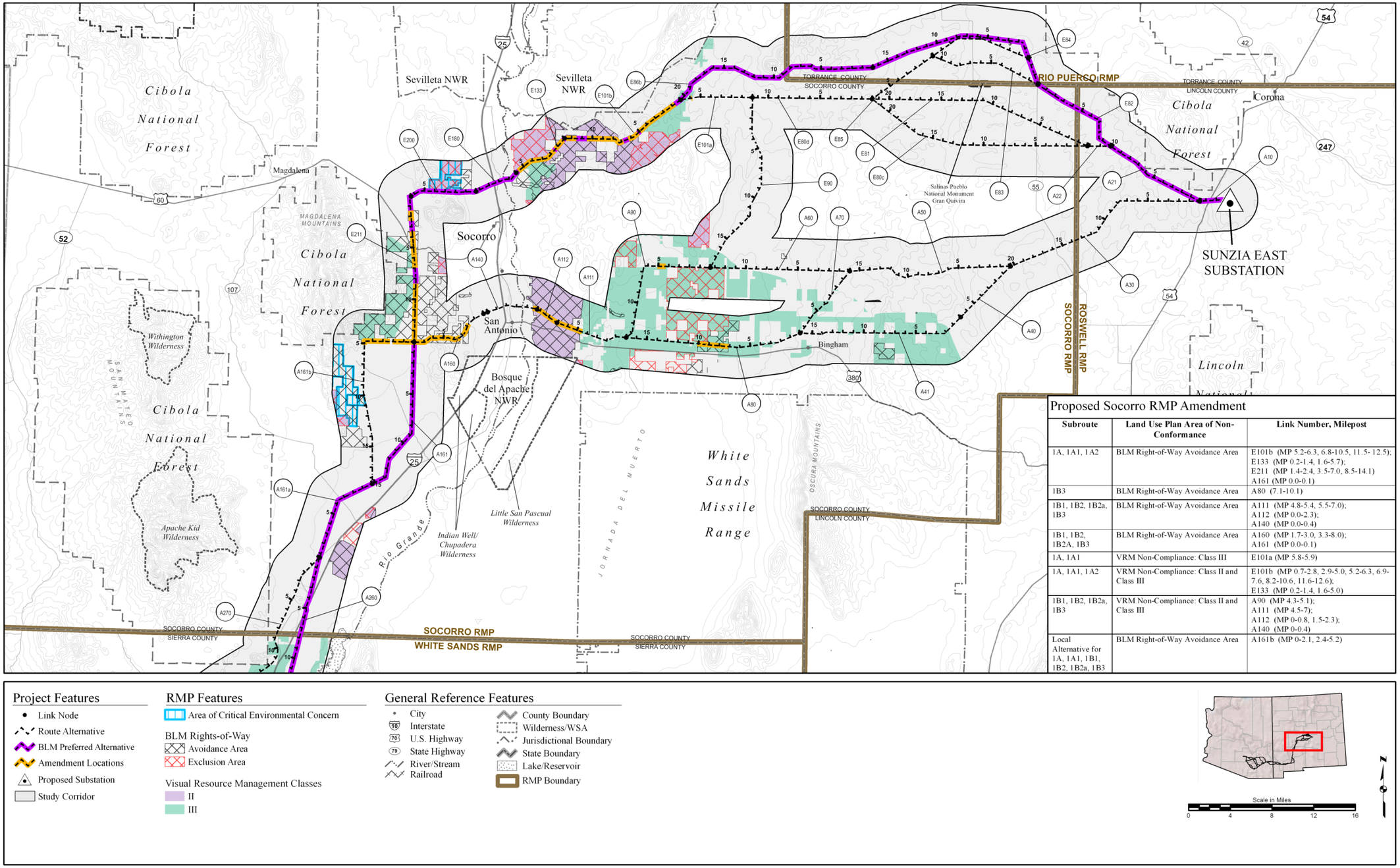

Proposed Socorro RMP Amendment

Subroute	Land Use Plan Area of Non-Conformance	Link Number, Milepost
1A, 1A1, 1A2	BLM Right-of-Way Avoidance Area	E101b (MP 5.2-6.3, 6.8-10.5, 11.5- 12.5); E133 (MP 0.2-1.4, 1.6-5.7); E211 (MP 1.4-2.4, 3.5-7.0, 8.5-14.1) A161 (MP 0.0-0.1)
1B3	BLM Right-of-Way Avoidance Area	A80 (7.1-10.1)
1B1, 1B2, 1B2a, 1B3	BLM Right-of-Way Avoidance Area	A111 (MP 4.8-5.4, 5.5-7.0); A112 (MP 0.0-2.3); A140 (MP 0.0-0.4)
1B1, 1B2, 1B2A, 1B3	BLM Right-of-Way Avoidance Area	A160 (MP 1.7-3.0, 3.3-8.0); A161 (MP 0.0-0.1)
1A, 1A1	VRM Non-Compliance: Class III	E101a (MP 5.8-5.9)
1A, 1A1, 1A2	VRM Non-Compliance: Class II and Class III	E101b (MP 0.7-2.8, 2.9-5.0, 5.2-6.3, 6.9-7.6, 8.2-10.6, 11.6-12.6); E133 (MP 0.2-1.4, 1.6-5.0)
1B1, 1B2, 1B2a, 1B3	VRM Non-Compliance: Class II and Class III	A90 (MP 4.3-5.1); A111 (MP 4.5-7); A112 (MP 0-0.8, 1.5-2.3); A140 (MP 0-0.4)
Local Alternative for 1A, 1A1, 1B1, 1B2, 1B2a, 1B3	BLM Right-of-Way Avoidance Area	A161b (MP 0-2.1, 2.4-5.2)

Figure 2-36. Proposed Socorro RMP Amendments

This page intentionally left blank.

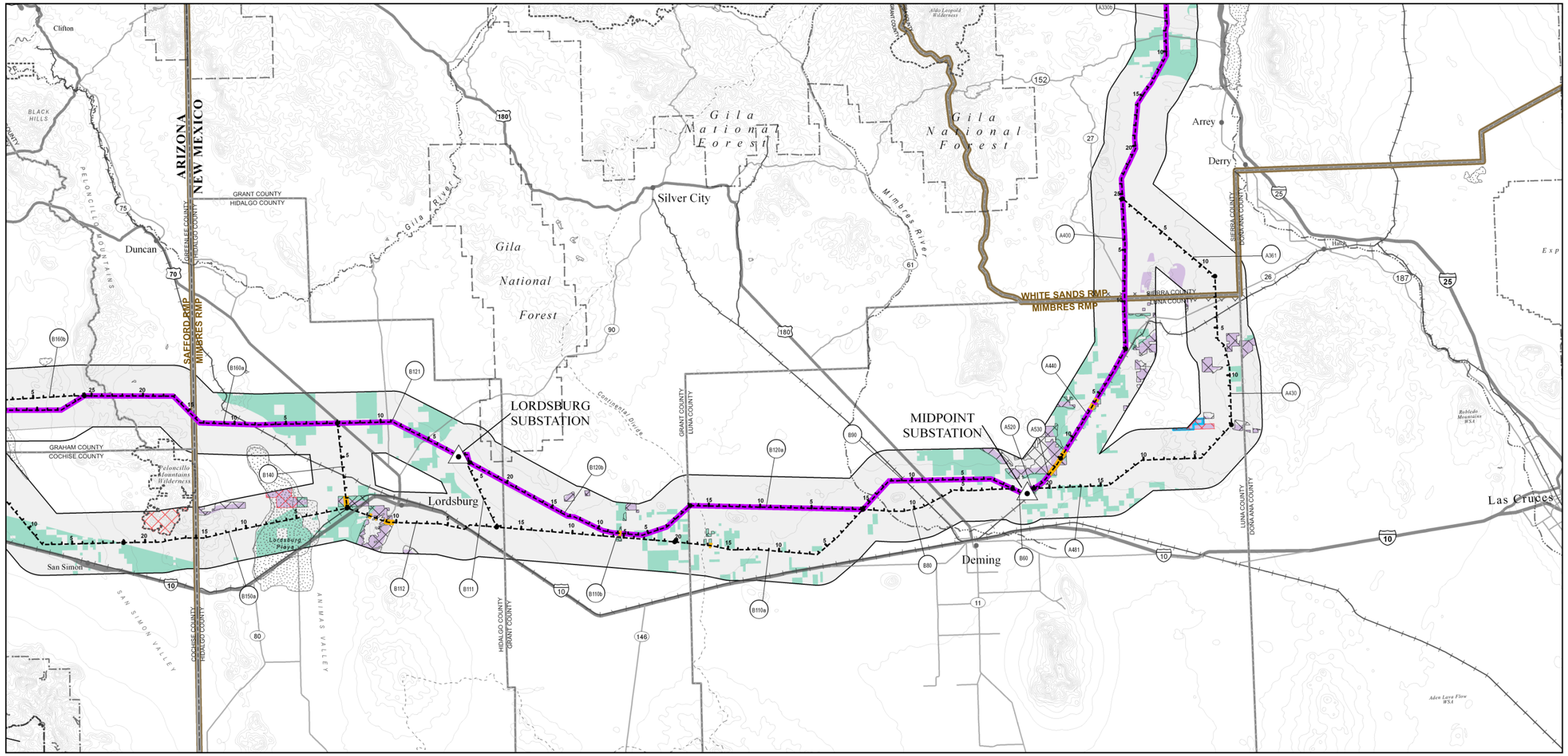

Project Features
- Link Node
- Route Alternative
- BLM Preferred Alternative
- Amendment Locations
- Proposed Substation
- Study Corridor

RMP Features
- Area of Critical Concern

BLM Rights-of-Way
- Avoidance Area
- Exclusion Area

Visual Resource Management Classes
- II
- III

General Reference Features
- City/Town
- Interstate
- U.S. Highway
- State Highway
- River/Stream
- Railroad
- County Boundary
- State Boundary
- Jurisdictional Boundary
- Wilderness/WSA
- Lake/Reservoir
- RMP Boundary

Proposed Mimbres RMP Amendment

Subroute	Land Use Plan Area of Non-Conformance	Link Number, Milepost
1A, 1A1, 1A2, 1B1, 1B2, 1B2a, 1B3	BLM Right-of-Way Avoidance Area	A440 (MP 5.6-5.9, 6.2-6.8, 11.5-12.4), A530 (MP 0.0-1.9)
3A, 3A2	BLM Right-of-Way Avoidance Area	B120b (MP 7.6 – 7.9)
3B	BLM Right-of-Way Avoidance Area	B110a (MP 16.6-16.9) B112 (MP 10.2-11.2, 11.5-11.6, 11.9-12.1, 12.5-12.8)
3B	VRM Non-Compliance: Class II	B112 (MP 10.4-11.2)
Crossover Link for 3B, 3A, 3A2	BLM Right-of-Way Avoidance Area	B140 (MP 0.2-1.2)

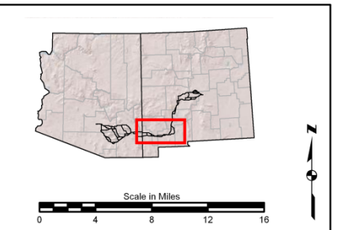

Figure 2-37. Proposed Mimbres (Las Cruces) RMP Amendments

This page intentionally left blank.

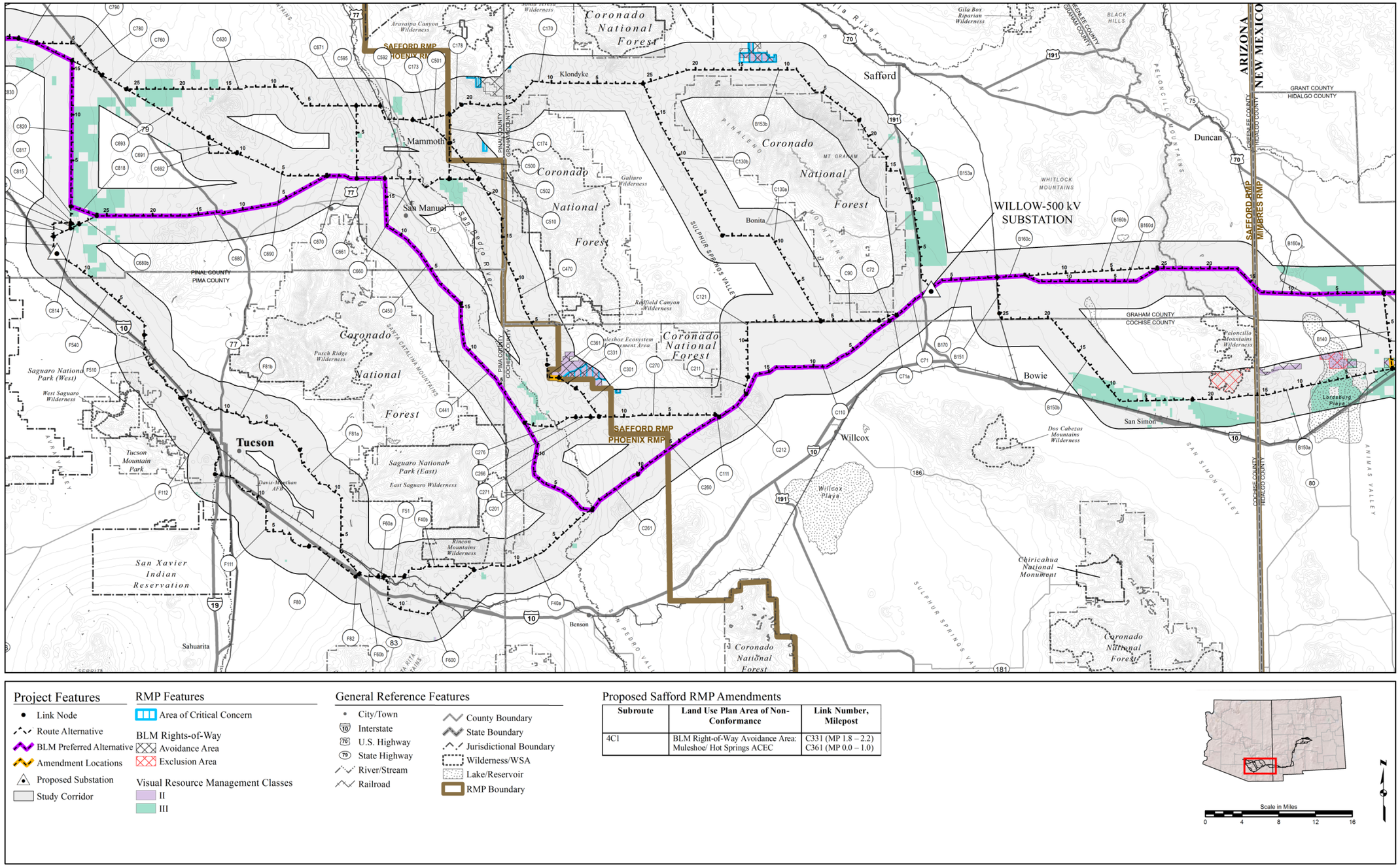

Proposed Safford RMP Amendments

Subroute	Land Use Plan Area of Non-Conformance	Link Number, Milepost
4C1	BLM Right-of-Way Avoidance Area: Muleshoe/ Hot Springs ACEC	C331 (MP 1.8 – 2.2) C361 (MP 0.0 – 1.0)

Figure 2-38. Proposed Safford RMP Amendments

This page intentionally left blank.