SunZia Southwest
Transmission Project

Preliminary Plan of Development

DRAFT - June 2012

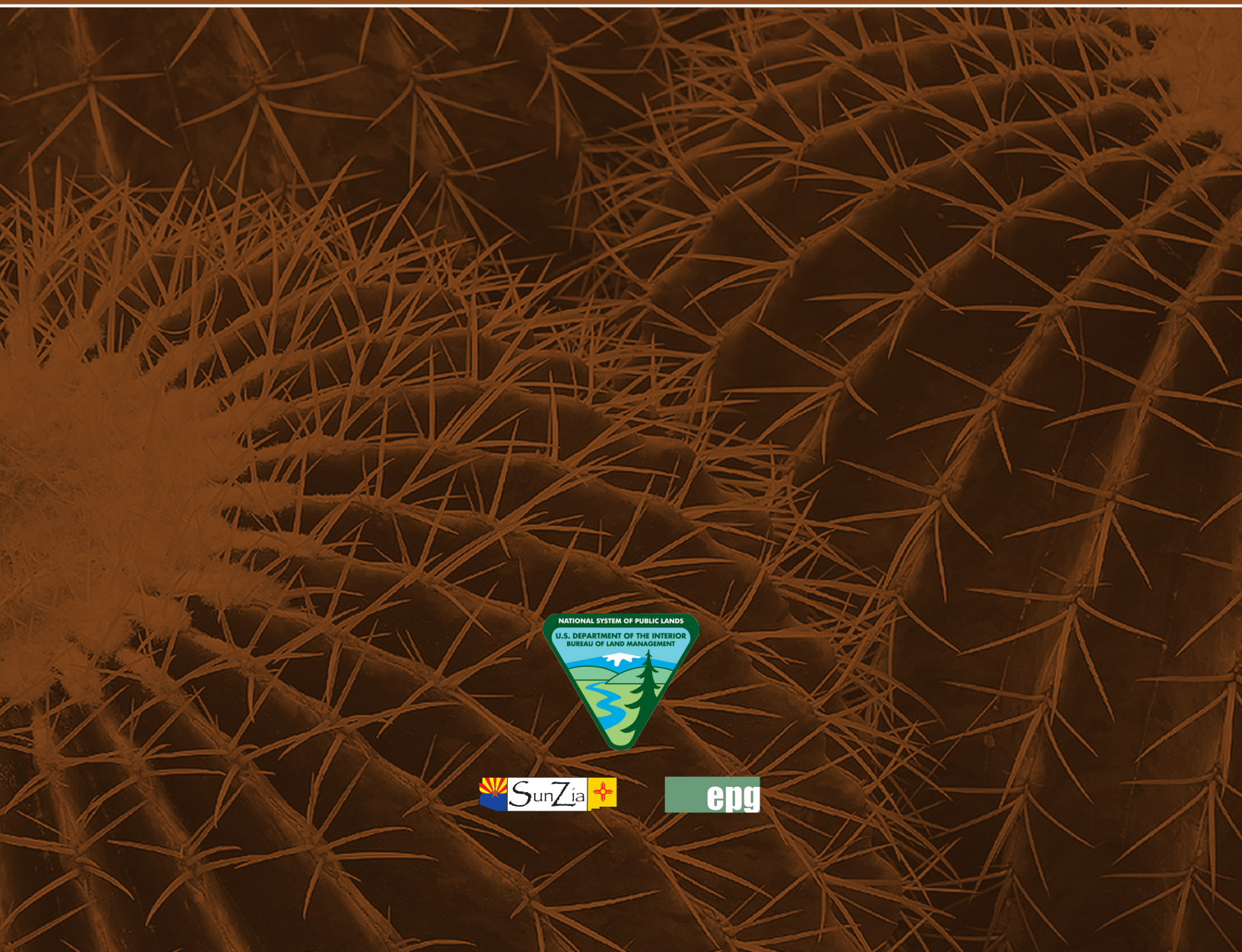

PRELIMINARY PLAN OF DEVELOPMENT

FOR THE
SUNZIA SOUTHWEST TRANSMISSION PROJECT

Prepared for:

Bureau of Land Management

Prepared by:

EPG, Inc.

On Behalf of SunZia Southwest, LLC

DRAFT – June 2012

TABLE OF CONTENTS

Section 1 – Introduction 1-1
1.1 Project Background 1-1
1.2 Project Description and Location 1-1
1.3 Organization of the POD 1-5
1.3.1 POD Volume I 1-5
1.3.2 Final POD Volume II 1-7
1.4 Purpose of the Draft Plan of Development 1-7
1.4.1 Relationship with Other Environmental Documents 1-8
1.5 Plan of Development Implementation on Public, State, and Private Lands 1-8
1.6 Federal, State, and Local Permits 1-9
Section 2 – Project Management 2-1
2.1 Roles and Responsibilities 2-1
2.1.1 Proponent 2-1
2.1.2 Bureau of Land Management 2-1
2.1.3 Compliance Inspection Contractor 2-2
2.1.4 Construction Contractor(s) 2-3
2.2 Communication Procedures and Protocols 2-3
Section 3 – Project Components 3-1
3.1 Project Facilities 3-1
3.1.1 Overhead Transmission Lines 3-1
3.1.2 Transmission Structures 3-4
3.1.3 Foundations 3-13
3.1.4 Conductors 3-13
3.1.5 Insulators and Associated Hardware 3-14
3.1.6 Overhead Groundwire and Electrodes 3-14
3.1.7 Grounding 3-15
3.1.8 Fiber Optic Regeneration Station 3-15
3.1.9 Other Electrical Hardware 3-16
3.1.10 Other Non-Electrical Hardware 3-16
3.1.11 Access Roads 3-16
3.1.12 Substations 3-18
3.2 Induced Currents on Adjacent Facilities 3-27
3.3 Land Requirements and Project Disturbance 3-28
3.3.1 Right-of-Way Acquisition 3-28
3.3.2 Project Disturbance 3-29
3.4 Existing Right-of-Way and Line Crossings 3-31
Section 4 – Project Construction 4-1
4.1 Construction Activities 4-1
4.2 Construction Workforce 4-2
4.3 Environmental and Safety Training 4-3
4.4 Deviations During Construction 4-4
4.5 Project Construction Closeout 4-4

Section 5 – Operation and Maintenance of Project 5-1
5.1 Introduction 5-1
5.2 Compatible Uses 5-1
5.3 Right-of-Way Safety Requirements 5-1
5.3.1 Building and Fence Grounding 5-2
5.4 Project Inspections and Maintenance 5-2
5.4.1 Transmission Line Maintenance 5-2
5.4.2 Vegetation Management 5-3
5.4.3 Substation Maintenance 5-3
5.5 Long-term Access to and Along the Right-of-Way 5-4
5.6 Signage and Markers 5-4
5.7 Radio or Television Interference 5-4
5.8 Contingency Planning 5-4
5.9 Emergency Procedures 5-4
5.10 Termination and Restoration 5-5
Section 6 – Mitigation of Environmental Concerns 6-1
6.1 Overview of Environmental Concerns and Mitigation 6-1
6.2 Specific Environmental Concerns and Applicable Mitigation Measures 6-14
6.2.1 Land Use 6-14
6.2.2 Air Quality 6-14
6.2.3 Noise 6-15
6.2.4 Earth Resources and Soils 6-15
6.2.5 Water Resources 6-16
6.2.6 Visual Resources 6-16
6.2.7 Wastes, Hazardous or Solid 6-17
6.2.8 Cultural and Paleontological Resources 6-17
6.2.9 Biological Resources 6-18

APPENDICES

Appendix A Construction Considerations
Appendix A1 Construction Plan and Program
Appendix A2 Flagging, Fencing, and Signage Plan
Appendix A3 Transportation Management Plan
Appendix A4 Fire Protection Plan
Appendix A5 Blasting Plan Methodology
Appendix A6 Erosion, Dust Control, and Air Quality Plan
Appendix A7 Hazardous Materials Management Plan
Appendix A8 Emergency Preparedness and Response Plan Guidelines
Appendix A9 Environmental Compliance Management Plan
Appendix B Biological Considerations
Appendix B1 Biological Resources Protection Plan
Appendix B2 Noxious Weed Management Plan

Appendix C Cultural and Paleontological Considerations
Appendix C1 Historic Properties Treatment Plan
Appendix C2 Historic Properties Identification Plan
Appendix C3 Programmatic Agreement
Appendix C4 Paleontological Resources Literature Review and Treatment Plan
Appendix D Other Special Resource Considerations and Mitigation Measures
Appendix E Stormwater Pollution and Prevention Plan Methodology
Appendix F Right-of-Way Preparation, Reclamation, and Monitoring Framework Plan

LIST OF TABLES

Table 1-1. Land Ownership/Jurisdiction – Miles Crossed by the Proposed Route 1-5
Table 1-2. Summary of Potential Major Federal and State Permits or Licenses Required and Other Environmental Review Requirements for Transmission Line Construction and Operation 1-10
Table 1-3. Potential Authorizations, Permits, Reviews, and Approvals for Transmission Line Construction and Operation 1-15
Table 3-1. Typical Design Characteristics of the Proposed 500 kV Transmission Line Project 3-2
Table 3-2. Typical Design Characteristics of a 500 kV Substation 3-18
Table 3-3. Substations: Estimated Temporary and Permanent Ground Disturbance (in acres) 3-19
Table 3-4. Total Disturbance Acreages across Administrative Jurisdictions for the SunZia Project [To Be Provided Upon Selection Of Final Route] 3-29
Table 3-5. Disturbance Breakdown for the SunZia Project [To Be Determined Upon Selection of Project Alternative] 3-30
Table 3-6. SunZia Right-of-Way and Line Crossings [To Be Provided Upon Selection Of Final Route] 3-31
Table 4-1. SunZia 500 kV Transmission Line Construction Estimated Personnel and Equipment[1] 4-2
Table 6-1. Standard Mitigation Measures 6-2
Table 6-2. SunZia Selective Mitigation Measures 6-8

LIST OF FIGURES

Figure 1-1. Project Overview Map 1-3
Figure 3-1. Typical 500 kV Transmission Line and Right-of-Way Configuration 3-2
Figure 3-2. Typical 500 kV Structure Diagram 3-4
Figure 3-3. Typical AC Guyed “V” Lattice Tangent Structure 3-6
Figure 3-4. Typical AC Guyed “V” Tubular Tangent Structure 3-7
Figure 3-5. Typical AC Self-Supporting Lattice Tangent Structure 3-7
Figure 3-6. Typical AC Self-Supporting Tubular Tangent Structure 3-8

Figure 3-7. Typical AC Self-Supporting Lattice Dead-End Lattice Structure 3-8
Figure 3-8. Typical AC Self-Supporting Dead-End Tubular Structure..... 3-9
Figure 3-9. Typical AC Self-Supporting Dead-End Tubular 3-Pole Structure 3-9
Figure 3-10. Typical DC Guyed Lattice Tangent Structure 3-10
Figure 3-11. Typical DC Guyed Tubular Tangent Structure..... 3-10
Figure 3-12. Typical DC Self-Supporting Lattice Tangent Structure 3-11
Figure 3-13. Typical DC Self-Supporting Tubular Tangent Structure..... 3-11
Figure 3-14. Typical DC Self-Supporting Lattice Dead-End Structure 3-12
Figure 3-15. Typical DC Self-Supporting Dead-End Tubular Structure..... 3-12
Figure 3-16. Typical Roadway Cut and Fill Conditions..... 3-17
Figure 3-17. Proposed Substation Layout – SunZia East 3-20
Figure 3-18. Proposed Substation Layout – Midpoint..... 3-21
Figure 3-19. Proposed Substation Layout – Lordsburg..... 3-22
Figure 3-20. Proposed Substation Layout – Willow-500 kV 3-23
Figure 3-21. Proposed Substation Expansion Layout – Pinal Central..... 3-24
Figure 3-22. Typical 500 kV Substation Schematic – Elevation View..... 3-25
Figure 3-23. Typical 500 kV DC Converter Station..... 3-26

SECTION 1 – INTRODUCTION

Section 1 of the Plan of Development (POD) provides an overview of the SunZia Southwest Transmission Project (Project) and explains the purpose of the POD, including its relationship to other documents prepared for the Project, as well as other relevant permits and approvals. Also in this section, the organization of the POD is presented and each section briefly outlined.

1.1 PROJECT BACKGROUND

SunZia Transmission, LLC (Proponent) submitted an application for right-of-way (Standard Form 299) on September 9, 2008, to construct, operate, and maintain the Project on public land administered by the Bureau of Land Management (BLM). The BLM New Mexico State Office will serve as the lead federal agency for the preparation of the environmental impact statement (EIS), ensure compliance with applicable environmental laws associated with cooperating agencies, and will decide whether or not to grant right-of-way for the Project based on the analyses of the EIS. Cooperating agencies that contributed to the preparation of the EIS and that are given consideration in this POD include the U.S. Army Corps of Engineers (USACE); Department of the Army, Fort Bliss McGregor Range; Department of the Army, White Sands Missile Range (WSMR); U.S. Air Force, Holloman Air Force Base (AFB); U.S. Fish and Wildlife Service (USFWS); U.S. National Park Service (NPS); Department of Defense (DOD) Siting Clearinghouse, Office of the Deputy Under Secretary (Installations and Environment); New Mexico State Land Office (NMSLO); New Mexico Spaceport Authority; Arizona State Land Department (ASLD); Arizona Game and Fish Department (AZGFD); Arizona Department of Transportation (ADOT); and Department of the Army, Fort Huachuca.

The Proponent's original application filing included a preliminary POD. The Draft POD described herein provides detailed information on the currently proposed Project facilities and the procedures and mitigation measures the Proponent will implement during construction, operation, and maintenance of the Project.

1.2 PROJECT DESCRIPTION AND LOCATION

The proposed Project will include two new, single-circuit 500 kV transmission lines located within a single right-of-way up to 1,000 feet wide over a lease term of 50 years. The approximately 500-mile-long transmission line route will originate at the proposed SunZia East Substation in Lincoln County, New Mexico, and terminate at the planned Pinal Central Substation in Pinal County, Arizona. The Project may be located within Lincoln, Socorro, Sierra, Luna, Grant, Hidalgo, and/or Torrance counties in New Mexico; and Graham, Greenlee, Cochise, Pinal, and/or Pima counties in Arizona (Figure 1-1).

At least one of the two 500 kV transmission lines will be constructed and operated as an alternating current (AC) facility. The other transmission line could be either an AC or direct

current (DC) facility. Depending on the configuration, the Project could provide up to 4,500 megawatts (MW) of additional transfer capacity on the regional electrical grid[1].

The Project will require new right-of-way on federal, state, and private lands for the transmission structures; new access roads required for construction, operation, and maintenance; and ancillary facilities (e.g., communication regeneration stations, etc.) associated with the Project. New roads may be required outside the transmission right-of-way.

Typically, the right-of-way width would be approximately 400 feet, in order to accommodate a separation of 200 feet between the two transmission lines, but could be up to 1,000 feet wide in areas where terrain poses engineering or construction constraints. In other constrained areas, the right-of-way width could be narrower than 400 feet. The transmission line facilities will primarily consist of guyed-V structures (lattice steel or tubular steel) at tangent locations. Other structure types may also be used, including self-supporting steel lattice (typically in areas of steep terrain or abrupt angles [15 to 90 degrees]), self-supporting tubular (typically used in areas of constricted right-of-way), dead-end lattice, dead-end tubular, and dead-end tubular 3-pole structures. Structure heights will range from 100 to 170 feet and structures will typically be placed approximately 1,000 to 1,500 feet apart, based on topographical and site-specific conditions.

The Project will also include the construction of the SunZia East 500 kV Substation at the Project's eastern terminus in Lincoln County, and up to three intermediate substations on private or state lands as follows:

- Midpoint Substation[2], located in Luna County, New Mexico
- Lordsburg Substation, located in Hidalgo County, New Mexico
- Willow-500 kV Substation, located in Graham County, Arizona

These intermediate substations will provide local utilities and load centers with access to energy transmitted on the lines. Other intermediate substations may also be considered. The approved Pinal Central Substation, at the Project's western terminus, has already received its regulatory permits and approvals and will be constructed by Salt River Project (SRP) and other entities.

Construction of the Project could require 36 months or more to complete and could consist of the following new facilities:

- two approximate 500-mile, 500 kV transmission lines and ancillary facilities from the proposed SunZia East Substation in Lincoln County, New Mexico, to the approved Pinal Central Substation in Pinal County, Arizona
- up to three new, interconnection substations located in Hidalgo and Luna counties, New Mexico, and in Graham County, Arizona
- construction of new or improved roads, providing access to 500 kV transmission line structures and ancillary facilities
- temporary work areas associated with construction activities

[1] A 500 kV AC transmission line would provide approximately 1,500 MW of transfer capacity; a 500 kV DC line would provide approximately 3,000 MW.
[2] Midpoint Substation may also be referred to as SunZia South in other planning documents.

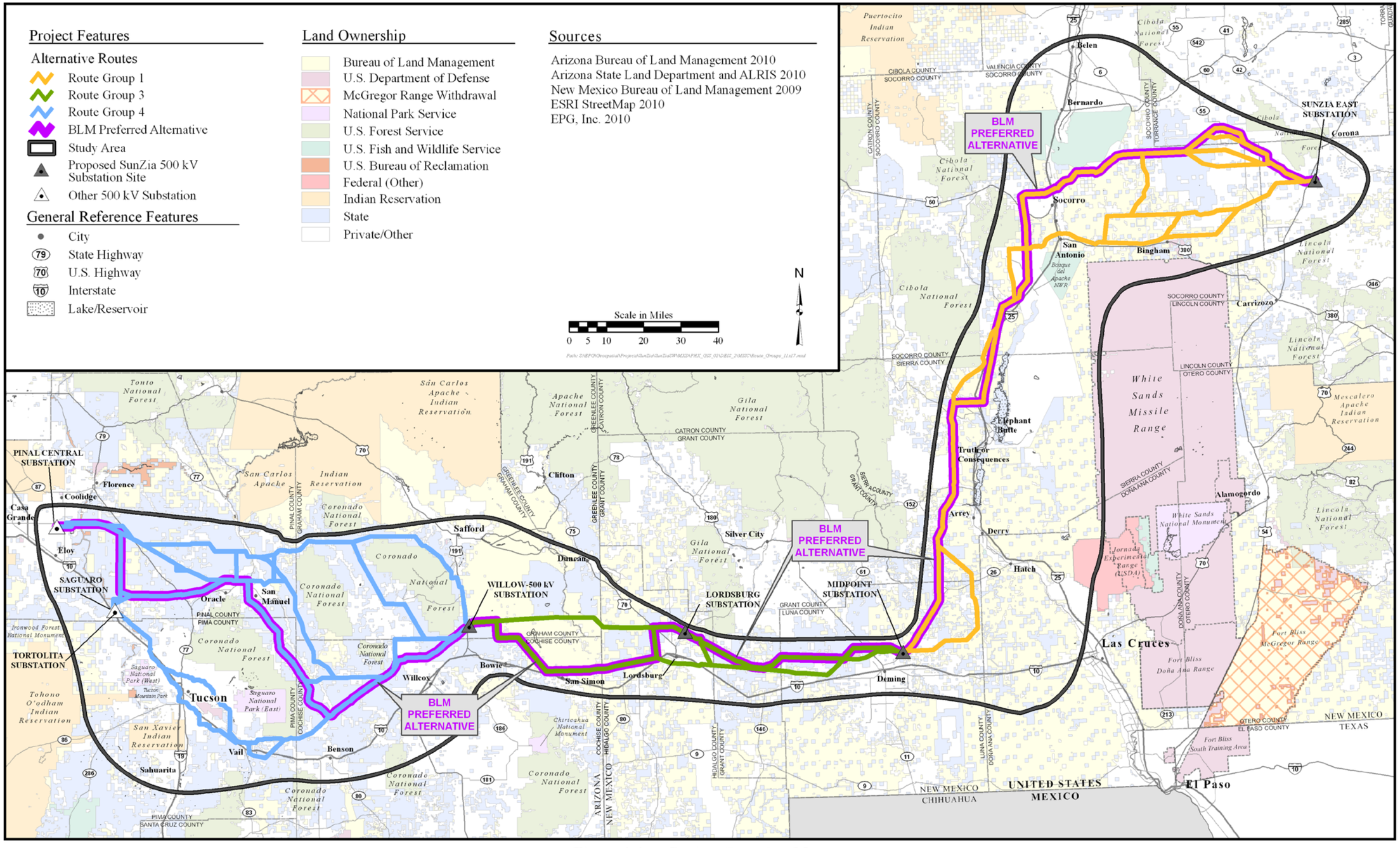

Figure 1-1. Project Overview Map

This page intentionally left blank.

Approximately XX miles will be located on federal lands, with XX miles located on state land, and XX miles located on private lands. Table 1-1 describes land ownership by segment of the Project.

Table 1-1. Land Ownership/Jurisdiction – Miles Crossed by the Proposed Route
[To be provided once proposed route is determined]

Route	BLM	State	Private
[To be determined]	X	X	X

1.3 ORGANIZATION OF THE POD

The Draft POD is organized in one volume containing sections 1 through 6 and appendices A through F. The Final POD will be organized into two major volumes; Volume I contains sections 1 through 6 and the appendices, and Volume II (to be provided upon approval of the preferred Project alternative and development of the Final POD) includes engineering, mitigation, and environmental mapping that support information presented in Volume I. Following is an overview of the information contained in these two volumes.

1.3.1 POD Volume I

Volume I of the POD is intended to provide the reader with an understanding of the construction, operation, and maintenance requirements for the Project, as well as a general overview of the Project and key elements of the POD (sections 1-6). Volume I includes detailed information regarding the required mitigation measures, protocols, and procedures for the construction, operation, and maintenance of the transmission line and ancillary facilities (appendices). While sections 1 through 6 provide general information, the appendices (along with the mapping materials in Volume II) are more detailed and have been designed to serve as stand-alone documents that may be readily updated and refined. Following is an outline summary of the information and materials presented in sections 1 through 6 and the appendices of the POD.

1.3.1.1 Sections 1 through 6

Sections 1 through 6 include the following information:

Section 1 – Introduction – Section 1 introduces the Project, discusses the purpose of the POD; explains the POD's relationship to other documents; lists required authorizations, permits, and approvals required for construction; and explains the organization of the POD.

Section 2 – Project Management – Section 2 explains the roles and responsibilities of the Project coordination team, and discusses Project communications and procedures.

Section 3 – Project Components – Section 3 describes the Project components/facilities (structures, foundations, conductors, access roads, etc.), right-of-way agreements, and the Project's relationship with other related rights-of-way and utilities.

Section 4 – Project Construction – Section 4 provides an introduction to the construction plan, including a summary of the activities related to construction, how to address deviations during construction, safety requirements, and fire protection. The construction plan is more fully described in Appendix A.

Section 5 – Operation and Maintenance of Project – Section 5 provides information related to the operation and maintenance of the Project's transmission line(s) once construction is complete, including public and environmental protection, dust control, and the termination and restoration of the right-of-way.

Section 6 – Mitigation of Environmental Concerns – Section 6 includes a brief overview and introduction of the key environmental concerns associated with the construction of the Project's transmission line(s), and relevant mitigation measures to be applied in order to avoid or minimize potential effects.

1.3.1.2 Appendices

The appendices are organized into six sections (A–F) as presented below.

Appendix A – Construction Considerations – This appendix offers detailed information regarding the specifics of construction, including:

- Appendix A1 – Construction Plan and Program
- Appendix A2 – Flagging, Fencing, and Signage Plan
- Appendix A3 – Transportation Management Plan
- Appendix A4 – Fire Protection Plan
- Appendix A5 – Blasting Plan Methodology
- Appendix A6 – Erosion, Dust Control, and Air Quality Plan
- Appendix A7 – Hazardous Materials Management Plan
- Appendix A8 – Emergency Preparedness and Response Plan Guidelines
- Appendix A9 – Environmental Compliance Management Plan

Appendix B – Biological Considerations – This appendix includes:

- Appendix B1 – Biological Resources Protection Plan
- Appendix B2 – Noxious Weed Management Plan

Appendix C – Cultural and Paleontological Considerations – This appendix includes:

- Appendix C1 – Historic Properties Treatment Plan
- Appendix C2 – Historic Properties Identification Plan
- Appendix C3 – Programmatic Agreement
- Appendix C4 – Paleontological Resources Literature Review and Treatment Plan

Appendix D – Other Special Resource Considerations and Mitigation Measures – This appendix includes information and mitigation measures specific to other environmental resource considerations (recreation, visual resources, etc.).

Appendix E – Stormwater Pollution and Prevention Plan Methodology – This appendix outlines the requirements and methodology for the preparation and submittal of a Stormwater Pollution and Prevention Plan that will be completed by the construction contractor(s) in order to meet the National Pollutant Discharge Elimination System general permit.

Appendix F – Right-of-Way Preparation, Reclamation, and Monitoring Framework Plan – Outlines a plan to be applied during the preparation of the right-of-way and during the construction and reclamation phases of the Project. This plan also provides guidance for monitoring the success of the reclamation process, as appropriate.

1.3.2 Final POD Volume II

Two sets of maps compose Volume II of the Final POD. These maps contain regional to detailed information, including the identification of key resource areas and site-specific measures and treatments to guide the construction of the transmission line and associated facilities as described below. This information is intended for use by the BLM, Compliance Inspection Contractor (CIC), Proponent, and construction contractor(s) as described in Section 2 – Project Management of this POD.

1.3.2.1 Map Set 1

The maps in Map Set 1 (topographic quad base) include panels that illustrate the location of facilities at a large scale for the entire alignment, including the location of tower sites, pulling and tensioning sites, laydown and staging areas, and access routes (including all approved potential ingress and egress points to the right-of-way).

Additional sets of these maps depicting sensitive biological and cultural resources in context with Project facilities also have been developed for use specifically by the BLM, CIC, and biological and cultural resource monitors.

1.3.2.2 Map Set 2

The maps in Map Set 2 (aerial maps, scale of 1” = 600’) include sheets that exhibit (1) the right-of-way in detail, including the specific location of permanent and temporary facilities (structures, pulling and tensioning sites, access roads, etc.), and sensitive environmental resource areas in the immediate vicinity, and (2) key mitigation measures to be implemented during the design, construction, and operation of the transmission line. Each of these detailed panel maps is numbered and indexed on the 1:24,000 scale maps presented in Map Set 1.

1.4 PURPOSE OF THE DRAFT PLAN OF DEVELOPMENT

This Draft POD outlines the stipulations and mitigation measures that will be followed during construction of the Project. The BLM is the lead federal agency for this Project. Environmental inspectors and monitors will be employed during construction, as required, and as stipulated in this POD and by the BLM. This Draft POD is intended to be used Project-wide as: (1) a summary of Project environmental requirements and protection measures; and (2) a description

of the processes and procedures that will be used to ensure compliance with the requirements of the BLM, USFWS, and other federal, state, and/or local agencies, as appropriate.

1.4.1 Relationship with Other Environmental Documents

This Draft POD is derived from the SunZia Southwest Transmission Project Draft EIS (2012) and includes input from the BLM and relevant federal and state agencies. The analyses were conducted through the National Environmental Policy Act (NEPA) process, which identified measures for avoidance, minimization, and mitigation of environmental impacts resulting from the implementation of this Project. This Draft POD incorporates the various regulatory approvals, permits, and other authorizations that contain environmental requirements, including those measures stipulated in resource management plans (RMP) for the Socorro, Las Cruces, Roswell, Rio Puerco, Safford, and Tucson field offices.

Upon selection of the preferred Project alternative, a Final POD will be developed to accompany the Final EIS that will be an enforceable stipulation of the associated record of decision (ROD) and right-of-way grant, should the BLM choose to grant the requested right-of-way for the Project. In addition to the mitigation measures, stipulations, and procedural methods identified in the Draft POD, the Final POD will identify and depict site-specific construction actions, Project facilities, and reclamation actions, including structure locations, access roads, temporary work areas, communication regeneration stations, construction yards, and batch plants.

Additions and/or amendments to the appendices are anticipated as a part of detailed design and construction. These additions or amendments will be reviewed and approved by the BLM prior to implementation, as appropriate. After commencement of construction, variances or deviations will be reviewed and approved by the BLM and/or CIC pursuant to the procedures in Section 4.4, Deviations During Construction; and Appendix A9 – Environmental Compliance Management Plan of this POD.

1.5 PLAN OF DEVELOPMENT IMPLEMENTATION ON PUBLIC, STATE, AND PRIVATE LANDS

The POD is the Proponent's commitment to the BLM and other federal, state, and local agencies to minimize adverse environmental impacts of the Project during the construction and operation phases. Therefore, standard mitigation measures, site-specific selective mitigation measures, and other specific stipulations and methods identified in the POD will be implemented as necessary over the approximately 500-mile length of the proposed Project (see Section 6 – Mitigation of Environmental Concerns).

The BLM Socorro, Las Cruces, Roswell, Rio Puerco, Safford, and Tucson field offices have required right-of-way grant holders to contract with an independent entity (i.e., a CIC), who will conduct environmental compliance inspections during the construction phase of the Project. The objective is to monitor for compliance with environmental stipulations designed to protect the environment and prevent impacts from exceeding those described in the EIS or other permit approvals. The CIC will monitor and oversee implementation of the POD on all federal and non-federal lands as described in Appendix A9 – Environmental Compliance Management Plan of the POD.

1.6 FEDERAL, STATE, AND LOCAL PERMITS

The Project conforms to or will amend all relevant RMPs for the BLM field offices in New Mexico and Arizona. Additionally, it conforms to relevant federal, state, and local statutes, regulations, and plans. Table 1-3 documents the potential federal, state, and local agencies' approvals, reviews, and permitting requirements identified to date for the proposed Project.

Table 1-2. Summary of Potential Major Federal and State Permits or Licenses Required and Other Environmental Review Requirements for Transmission Line Construction and Operation

Proposal Requiring Action	Agency	Permit, License, Approval, Compliance, or Review	Relevant Laws and Regulations
Federal			
Preconstruction surveys; construction, operation, and abandonment of transmission line on public land	BLM	EIS and ROD (evaluating right-of-way application)	NEPA (42 USC 4321); CEQ (40 CFR 1500-1508)
		Right-of-way grant and temporary use permit	FLPMA (43 USC 1761-1771); 43 CFR 2800
		RMP revision for land use plan conformance	43 CFR 1610.5-3
Construction, operation, and abandonment of transmission line across BOR-administered land	BOR	Easement or right-of-way use authorization	43 USC § 387 of the Reclamation Project Act of 1939 and 43 CFR Part 429
Construction, operation, and abandonment of transmission line across or within highway rights-of-way	Federal Highway Administration (also ADOT and NMDOT)	Permits to cross Federal Aid Highway; 4(f) compliance	Federal-Aid Highway Act (23 USC 101 et seq.); 23 CFR 1.23 and 1.27; 23 CFR 645; 23 CFR 771
Manage effects on species listed or critical habitat designated under the ESA and BLM sensitive species	BLM in consultation with USFWS	Compliance with the ESA	ESA, as amended (16 USC 1531 et seq.); BLM Manual H-6840 (Special-Status Species)
Protect and manage migratory birds	BLM in consultation with USFWS	Compliance	MBTA (16 USC 703-712); EO 13186, Responsibilities of Federal Agencies to Protect Migratory Birds
Protect bald and golden eagles	BLM in consultation with USFWS	Compliance	BGEPA of 1972 (16 USC 668)
Disturbance of historic properties	BLM in consultation with SHPOs, Advisory Council on Historic Preservation, tribes, other federal, state, and local agencies, and consulting parties	Compliance with Section 106	NHPA (16 USC 470); 36 CFR 800)
Potential conflicts with freedom to practice traditional tribal religions	Federal lead agency, federal land management agency	Consultation with affected tribes	American Indian Religious Freedom Act (42 USC 1996), EO 13007, Religious Freedom Restoration Act of 1993 (42 USC 2000bb et seq.) Secretarial Order 3206

Table 1-2. Summary of Potential Major Federal and State Permits or Licenses Required and Other Environmental Review Requirements for Transmission Line Construction and Operation

Proposal Requiring Action	Agency	Permit, License, Approval, Compliance, or Review	Relevant Laws and Regulations
Disturbance of graves, associated funerary objects, sacred objects, and items of cultural patrimony	Federal land management agency	Consultation with affected tribes regarding treatment of remains and objects	NAGPRA (25 USC 3001)
Investigation of cultural and paleontological resources	Affected land management agency	Permit for study of historical, archaeological, and paleontological resources	American Antiquities Act of 1906 (16 USC 432-433)
Investigation of cultural resources	Affected land management agency	Permits to excavate and remove archaeological resources on federal land; tribes with interests in resources must be consulted prior to issuance of permits	ARPA of 1979 (16 USC 470aa to 470ee); 43 CFR 7
Ground disturbance on federal land or federal aid project	BLM	Compliance with BLM mitigation and planning standards for paleontological resources on public land	FLPMA (43 USC 1701-1771); Antiquities Act of 1906 (16 USC 431-433)
Collection of paleontological resources from federal land	BLM	Permit to collect paleontological resources from federal land	Omnibus Public Lands Management Act – Paleontological Resources Preservation. PL 111-11, Title VI, Subtitle D, Sections 6301-6312, 123 Stat. 1172, 16 USC 470aaa.
Protection of segments, sites, and features related to national trails	Affected land management agency	National Trails System Act compliance	National Trails System Act (PL 90-543) (16 USC 1241 to 1249)
Construction sites with greater than 5 acres of land disturbed	EPA	Section 402 National Pollutant Discharge Elimination System General Permit for Stormwater Discharges from Construction Activities	CWA (33 USC 1342)
Potential pollutant discharge during construction and operation	EPA	Spill Prevention Control and Countermeasure Plan	Oil Pollution Act of 1990 (33 USC 2701 et seq.); 40 CFR 112
Construction across a Superfund site	EPA	Agreement or order of consent with EPA	CERCLA (42 USC 9601-9675)
Construction across water resources	USACE	Section 10 and/or Section 404 permits (see below)	33 USC 403, 1344(a); 33 CFR 320, 322, 323, 325
Placement of structures and construction work in navigable waters of the U.S.	USACE	Section 10 permit for construction of obstructions to navigable capacity of navigable waters	Rivers and Harbors Act of 1899 (33 USC 403)

Table 1-2. Summary of Potential Major Federal and State Permits or Licenses Required and Other Environmental Review Requirements for Transmission Line Construction and Operation

Proposal Requiring Action	Agency	Permit, License, Approval, Compliance, or Review	Relevant Laws and Regulations
Potential discharge into waters of the U.S. (including wetlands and washes)	USACE	Section 404 permit for discharge of dredged or fill material to waters of the U.S.	CWA (33 USC 1344)
Crossing 100-year floodplain, streams, and rivers	USACE	Floodplain use permit	40 USC 961
Construction, operation, and abandonment of transmission line across DOD-administered land	DOD – Department of the Army	Easement or right-of-way use authorization	10 USC § 2668 – Easements for rights-of-way Army Regulations 405-80 and 420-1
Construction in or modification of floodplains	Federal action agencies	Compliance; consider alternatives to avoid adverse effects and incompatible development in floodplains	42 USC 4321 EO 11988 Floodplains
Construction in or modification of wetlands	Federal action agencies	Compliance	42 USC 4321 EO 11990 Wetlands
Location of structures in regards to airport facilities and airspace	FAA	A "No-hazard Declaration" required if structure is more than 200 feet in height	FAA Act of 1958 (PL 85-726) (14 CFR 77)
		Section 1101 Air Space Permit for air space construction clearance	FAA Act of 1958 (PL 85-726) (14 CFR 77)
Sales for resale and transmission services	FERC	Federal Power Act compliance by power seller	Federal Power Act (16 USC 792)
State of Arizona			
Construction of a transmission line with a voltage of 115 kV or greater	ACC	Certificate of Environmental Compatibility	ARS 40-360.03; AAC R14-3, Corporation Commission Rules of Practice and Procedure
Stormwater management from potential discharges associated with industrial activity or construction of sites greater than 5 acres (cumulative)	ADEQ	Arizona Pollutant Discharge Elimination System permit	ARS 49-255; AAC R18-9-1, 2, AAC R18-11-1
Construction across water resources	ADEQ	State Water Quality Certification (state review required for all Federal Section 404 permits)	CWA (33 CFR Parts 320, 322, 323, 325)
Obtaining federal National Pollutant Discharge Elimination System Permit	ADEQ	Consistency Review Form to ensure that a proposed facility or use will be consistent with the existing Certified Regional Water Quality Management Plan	CWA (Section 303, et al.), Federal Water Pollution Control Act Section 208

Table 1-2. Summary of Potential Major Federal and State Permits or Licenses Required and Other Environmental Review Requirements for Transmission Line Construction and Operation

Proposal Requiring Action	Agency	Permit, License, Approval, Compliance, or Review	Relevant Laws and Regulations
Fugitive dust as a result of Project construction	ADEQ	Compliance with dust control measures and standards	AAC: R18-2-604, R18-2-605, R18-2-606, R18-2-607, R18-2-612
Construction, operation, and abandonment of transmission lines across or within state highway right-of-way	ADOT	Crossing or encroachment permit, permit for use of highway right-of-way	ARS 28-7053, AAC R17-3-501 through 509
Survey and construction of a transmission line within rights-of-way on State Trust Land	ASLD	Right-of-way/Right-of-entry permit	ARS 37-461
Loss of special-status plant species	Arizona Department of Agriculture	Permit to Remove Plants	Native Plant Law (ARS 3-901 through 916)
Disturbance to or loss of special-status animal species habitat	AZGFD	Coordination with USFWS/BLM/USACE	U.S. Fish and Wildlife Coordination Act
Potential disturbance to cultural resources on State Land	Arizona State Museum	Permit to investigate	ARS 41-841 through 847
Potential disturbance to cultural resources on State Land	SHPO	Review and approval of use of any State Trust Land	ARS 41-861 through 864
Potential disturbance to human remains or funerary objects	Arizona State Museum	Grant Permission to Disturb	ARS 41-865
State of New Mexico			
Construction of a transmission line with a voltage of 230 kV or greater	New Mexico Public Regulation Commission	Application for approval of location of transmission line	NMSA 62-9-3; 17.9.592 NMAC
Construction of a transmission line with a voltage of 230 kV or greater	New Mexico Public Regulation Commission	Certificate of Public Convenience and Necessity	NMSA 62-9-1; 17.1.2.9 NMAC
Upgrading gravel access roads and any additional highway entry/exit points.	NMDOT	Access Permit, including stipulations for any safety enhancements necessary to the highway	18.31.6 NMAC
Installation of transmission line within the right-of-way of state-managed roadways	NMDOT	New Mexico Public Highway Utility Accommodation Permit	17.4.2 NMAC
Protect water quality standards during construction and operation activities	NMED, Water Quality Bureau	National Pollutant Discharge Elimination System Construction Stormwater Permit and Stormwater Pollution Prevention Plan	NMSA 74-6; 20.6 NMAC
Management of hazardous waste onsite during construction/operation	NMED/HWB	Hazardous Waste Permit	NMSA 74-4; 20.4 NMAC

Table 1-2. Summary of Potential Major Federal and State Permits or Licenses Required and Other Environmental Review Requirements for Transmission Line Construction and Operation

Proposal Requiring Action	Agency	Permit, License, Approval, Compliance, or Review	Relevant Laws and Regulations
Storage and use of hazardous chemicals onsite during construction/operation	NMED/HWB	EPA Waste Activity EPA ID Number	NMSA 4-4E-1
Taking or transplanting of state endangered plant species (during construction, right-of-way clearing, etc.)	New Mexico Dept. of Energy, Minerals, and Natural Resources, Forestry Division	Collection permit	NMSA 75-6-1; 19.21.2 NMAC
Manage effects to threatened and endangered species	NMDGF	Survey permit and general consultation	NMSA 17-2-42; NMDGF Habitat Handbook
Construction of a transmission line on New Mexico State Lands	NMSLO	Right-of-way or easement on State Land	NMSA 19-7-57
Identification of, and potential disturbance to, cultural resources in Project area	New Mexico State Historic Preservation Division	Cultural Survey Permit; coordination with state SHPO	NMSA 18-6; 4.108, 4.10.15 NMAC
Local*			
Potential encroachment onto county or city rights-of-way	Public Works, Development Services	Right-of-way use permit, encroachment permit	County/local ordinance or municipal code
Construction activities, potential for fugitive dust from construction	Public Works, Building	Grading and excavation permit, dust control permit	County/local ordinance or municipal code
Amending zoning or land use to allow use (construction and operation of transmission line)	Planning and Zoning, Community Development	Special use permit, conditional use permit	County/local ordinance or municipal code

* Local permits are examples only of permits that could be anticipated at the local (county and city) level, as local permitting agencies often defer to state authorities for projects of this scale.

AAC Arizona Administrative Code
ACC Arizona Corporation Commission
ADEQ Arizona Department of Environmental Quality
ARPA Archaeological Resources Protection Act
ARS Arizona Revised Statute
BGEPA Bald and Gold Eagle Protection Act
CERCLA Comprehensive Environmental Response, Compensation, and Liability Act
CWA Clean Water Act
EPA Environmental Protection Agency
et seq. and the following
FAA Federal Aviation Administration
HWB Hazardous Waste Bureau
MBTA Migratory Bird Treaty Act
NAGPRA Native American Graves Protection and Repatriation Act of 1990
NMAC New Mexico Administrative Code
NMDGF New Mexico Department of Game and Fish
NMDOT New Mexico Department of Transportation
NMED New Mexico Environment Department
NMSA New Mexico Statutes Annotated
PL Public Law
SHPO State Historic Preservation Office

Table 1-3. Potential Authorizations, Permits, Reviews, and Approvals for Transmission Line Construction and Operation

Proposal Requiring Action	Agency	Permit, License, Approval, Compliance, or Review	Relevant Laws and Regulations
Federal			
Preconstruction surveys; construction, operation, maintenance, and abandonment of transmission line on public land	BLM	EIS and ROD (evaluating right-of-way application)	NEPA (42 USC 4321); CEQ (40 CFR 1500-1508);
		Right-of-way grant and temporary use permit	FLPMA of 1976 (43 USC 1761-1771); 43 CFR 2800
		RMP revision for land use plan conformance	43 CFR 1610.5-3
Construction, operation, maintenance, and abandonment of transmission line across Reclamation-administered land	Reclamation	Easement or right-of-way use authorization	43 USC § 387 of the Reclamation Project Act of 1939 and 43 CFR Part 429
Construction, operation, maintenance, and abandonment of transmission line across or within highway rights-of-way	Federal Highway Administration	Permits to cross Federal Aid Highway; 4(f) compliance	Federal-Aid Highway Act (23 USC 101 et seq.); 23 CFR 1.23 and 1.27; 23 CFR 645; 23 CFR 771
Manage effects on species listed or critical habitat designated under the ESA and BLM sensitive species	BLM in consultation with the USFWS	Compliance with the ESA	ESA of 1973, as amended (16 USC 1531 et seq.); BLM Manual H-6840 (Special Status Species)
Protect and manage migratory birds	BLM in consultation with the USFWS	Compliance	MBTA (16 USC 703-712); EO 13186, Responsibilities of Federal Agencies to Protect Migratory Birds
Protect bald and golden eagles	BLM in consultation with USFWS	Compliance	Bald and Golden Eagle Protection Act of 1972 (16 USC 668)
Disturbance of historic properties	BLM in consultation with SHPOs, Advisory Council on Historic Preservation	Section 106 consultation	NHPA of 1966 (16 USC 470); 36 CFR 800)
Excavation of archaeological resources	Federal land-management agency and tribes	Permits to excavate	ARPA of 1979(16 USC 470aa to 470ee)
Potential conflicts with freedom to practice traditional American Indian religions	Federal lead agency, federal land-management agency	Consultation with affected American Indians	American Indian Religious Freedom Act (42 USC 1996), EO 13007, RFRA of 1993 (42 USC 2000bb et seq.)
Disturbance of graves, associated funerary objects, sacred objects, and items of cultural patrimony	Federal land-management agency	Consultation with affected American Indian groups regarding treatment of remains and objects	NAGPRA of 1990 (25 USC 3001)
Investigation of cultural and paleontological resources	Affected land-management agency	Permit for study of historical, archaeological, and paleontological resources	American Antiquities Act of 1906 (16 USC 432-433)

Table 1-3. Potential Authorizations, Permits, Reviews, and Approvals for Transmission Line Construction and Operation

Proposal Requiring Action	Agency	Permit, License, Approval, Compliance, or Review	Relevant Laws and Regulations
Investigation of cultural resources	Affected land-management agency	Permits to excavate and remove archaeological resources on federal lands; American Indian tribes with interests in resources must be consulted prior to issuance of permits	ARPA of 1979 (16 USC 470aa to 470ee); 43 CFR 7
Ground disturbance on federal land or federal aid project	BLM	Compliance with BLM mitigation and planning standards for paleontological resources on public lands	FLPMA (43 USC 1701-1771); Antiquities Act of 1906 (16 USC 431-433)
Collection of paleontological resources from federal land	BLM	Permit to collect paleontological resources from federal land	Omnibus Public Lands Management Act – Paleontological Resources Preservation. PL 111-11, Title VI, Subtitle D, sections 6301-6312, 123 Stat. 1172, 16 USC 470aaa.
Protection of segments, sites, and features related to national trails	Affected land-management agency	National Trails System Act compliance	National Trails System Act (PL 90-543) (16 USC 1241 to 1249)
Construction sites with greater than 5 acres of land disturbed	EPA	Section 402 NPDES General Permit for Stormwater Discharges from Construction Activities	CWA (33 USC 1342)
Potential pollutant discharge during construction, operation, and maintenance	EPA	Spill Prevention Control and Countermeasure Plan	Oil Pollution Act of 1990 (33 USC 2701 et seq.); 40 CFR 112
Construction across a Superfund site	EPA	Agreement or order on consent with EPA	CERCLA (42 USC 9601-9675)
Construction across water resources	USACE	Section 10 and/or Section 404 permits (see below)	33 USC 403, 1344(a); 33 CFR 320, 322, 323, 325
Placement of structures and construction work in navigable waters of the U.S.	USACE	Section 10 permit for construction of obstructions to navigable capacity of navigable waters	Rivers and Harbors Act of 1899 (33 USC 403)
Potential discharge into waters of the U.S. (including wetlands and washes)	USACE	Section 404 permit for discharge of dredged or fill material to waters of the U.S.	CWA (33 USC 1344)
Crossing 100-year floodplain, streams, and rivers	USACE	Floodplain use permit	40 USC 961
Construction in or modification of floodplains	Federal action agencies	Compliance; consider alternatives to avoid adverse effects and incompatible development in floodplains	42 USC 4321 EO No. 11988 Floodplains
Construction in or modification of wetlands	Federal action agencies	Compliance	42 USC 4321 EO No. 11990 Wetlands

Table 1-3. Potential Authorizations, Permits, Reviews, and Approvals for Transmission Line Construction and Operation

Proposal Requiring Action	Agency	Permit, License, Approval, Compliance, or Review	Relevant Laws and Regulations
Location of towers in regards to airport facilities and airspace	FAA	A "No-hazard Declaration" required if structure is more than 200 feet in height	FAA Act of 1958 (PL 85-726) (14 CFR 77)
		Section 1101 Air Space Permit for air space construction clearance	FAA Act of 1958 (PL 85-726) (14 CFR 77)
Sales for resale and transmission services	FERC	Federal Power Act compliance by power seller	Federal Power Act (16 USC 792)
State of Arizona			
Construction of a transmission line with a voltage of 115 kV or greater	ACC	Certificate of Environmental Compatibility	ARS 40-360.03; AAC R-14-3, Corporation Commission Rules of Practice and Procedure
Stormwater management from potential discharges associated with industrial activity or construction of sites greater than 5 acres (cumulative)	ADEQ	Arizona Pollutant Discharge Elimination System permit.	ARS 49-255; AAC R18-9-1, 2, AAC R18-11-1
Construction across water resources	ADEQ	State Water Quality Certification (State review required for all Federal Section 404 permits)	CWA (33 CFR Parts 320, 322, 323, 325)
Obtaining federal NPDES Permit	ADEQ	Consistency Review Form to ensure that a proposed facility or use will be consistent with the existing Certified Regional Water Quality Management Plan	CWA (Section 303, et al.), Federal Water Pollution Control Act Section 208
Fugitive dust as a result of project construction	ADEQ	Compliance with dust control measures and standards	AAC: R-18-2-604, R-18-2-605, R-18-2-606, R-18-2-607, R-18-2-612
Construction, operation, maintenance, and abandonment of transmission lines across or within state highway right-of-way	ADOT	Crossing permit, permit for use of right-of-way	ARS 28-7053, AAC R17-3-501 through 509
Encroachment onto State Trust Land	ASLD	Right-of-way permit	ARS 37-461
Loss of special status plant species	Arizona Department of Agriculture	Permit to Remove Plants	Native Plant Law (ARS 3-901 through 916)
Disturbance to or loss of special status animal species habitat	AZGFD	Coordination with USFWS/BLM/USACE	U.S. Fish and Wildlife Coordination Act
Potential disturbance to cultural resources on State Land	Arizona State Museum	Permit to investigate	ARS 41-841 through 847

Table 1-3. Potential Authorizations, Permits, Reviews, and Approvals for Transmission Line Construction and Operation			
Proposal Requiring Action	**Agency**	**Permit, License, Approval, Compliance, or Review**	**Relevant Laws and Regulations**
Potential disturbance to cultural resources on State Land	SHPO	Review and approval of use of any State Trust Lands	ARS 41-861 through 864
Potential disturbance to human remains or funerary objects	Arizona State Museum	Grant Permission to Disturb	ARS 41-865
State of New Mexico			
Construction of a transmission line with a voltage of 230 kV or greater	NMPRC	Application for approval of location of transmission line	NMSA 62-9-3; 17.9.592 NMAC
Construction of a transmission line with a voltage of 230 kV or greater	NMPRC	Certificate of Public Convenience and Necessity	NMSA 62-9-1; 17.1.2.9 NMAC
Upgrading gravel access roads and any additional highway entry/exit points.	NMDOT	Access Permit, including stipulations for any safety enhancements necessary to the highway	18.31.6 NMAC
Installation of transmission line within the right-of-way of state-managed roadways	New Mexico State Highway and Transportation Department	New Mexico Public Highway Utility Accommodation Permit	17.4.2 NMAC
Protect water quality standards during construction and operation activities	NMED, Water Quality Bureau	NPDES Construction Stormwater Permit and Stormwater Pollution Prevention Plan	NMSA 74-6; 20.6 NMAC
Management of hazardous waste on site during construction/operation	NMED/HWB	Hazardous Waste Permit	NMSA 74-4; 20.4 NMAC
Storage and use of hazardous chemicals on site during construction/operation	NMED/HWB	EPA Waste Activity EPA ID Number	NMSA 4-4E-1
Taking or transplant of state endangered plant species (during construction, right-of-way clearing, etc.)	New Mexico Dept. of Energy, Minerals, and Natural Resources, Forestry Division	Collection permit	NMSA 75-6-1; 19.21.2 NMAC
Manage effects to threatened and endangered species	NMDGF	Survey permit and general consultation	NMSA 17-2-42; NMDGF Habitat Handbook
Construction of a transmission line on New Mexico State Lands	NMSLO	Right-of-way or easement on State Land	NMSA 19-7-57
Identification of and potential disturbance to cultural resources in project area	New Mexico State Historic Preservation Division	Cultural Survey Permit; coordination with state SHPO	NMSA 18-6; 4.108, 4.10.15 NMAC

Table 1-3. Potential Authorizations, Permits, Reviews, and Approvals for Transmission Line Construction and Operation

Proposal Requiring Action	Agency	Permit, License, Approval, Compliance, or Review	Relevant Laws and Regulations
Local*			
Potential encroachment onto county or city rights-of-way	Public Works, Development Services	Right-of-way use permit, encroachment permit	County/local ordinance or municipal code
Construction activities, potential for fugitive dust from construction	Public Works, Building	Grading and excavation permit, dust control permit	County/local ordinance or municipal code
Amending zoning or land use to allow use (construction and operation of transmission line)	Planning and Zoning, Community Development	Special use permit, conditional use permit	County/local ordinance or municipal code

* The following permits are examples only of permits that could be anticipated at the local (county and city) level, as local permitting agencies often defer to state authorities for projects of this scale.

AAC – Arizona Administrative Code
ACC – Arizona Corporation Commission
ADEQ – Arizona Department of Environmental Quality
ADOT – Arizona Department of Transportation
ARPA – Archaeological Resources Protection Act
ARS – Arizona Revised Statute
CEQ – Council on Environmental Quality
CFR – Code of Federal Regulations
CWA – Clean Water Act
EO – Executive Order
EPA – Environmental Protection Agency
ESA – Endangered Species Act
FAA – Federal Aviation Administration
FERC – Federal Energy Regulatory Commission
FLPMA – Federal Land Policy and Management Act
HWB – Hazardous Waste Bureau
MBTA – Migratory Bird Treaty Act
NAGPRA – Native American Graves and Protection and Repatriation Act
NMDGF – New Mexico Department of Game and Fish
NHPA – National Historic Preservation Act
NMAC – New Mexico Administrative Code
NMDOT – New Mexico Department of Transportation
NMED – New Mexico Environment Department
NMPRC – New Mexico Public Regulation Commission
NMSA – New Mexico Statutes Annotated
NPDES – National Pollutant Discharge Elimination System
PL – Public Law
Reclamation – Bureau of Reclamation
RFRA – Religious Freedom Restoration Act
SHPO – State Historic Preservation Office
USC – United States Code

This page intentionally left blank.

SECTION 2 – PROJECT MANAGEMENT

This section discusses how the Project will be managed during its construction, operation, and maintenance. It includes an overview of the roles and responsibilities of the various parties involved with the Project and communications, procedures, and protocols.

2.1 ROLES AND RESPONSIBILITIES

Presented in this section are the roles and responsibilities of the various parties who will be involved with the construction of the Project. These parties include the Project Proponent, the BLM, the CIC, the construction contractor(s), and the environmental resource specialists/monitors.

2.1.1 Proponent

The Proponent is responsible for the administration of the right-of-way, and coordination between the Project engineer, construction contractor(s), and environmental specialists. The Proponent will also be responsible for the construction, operation, and maintenance of the transmission line(s) and ancillary facilities in a manner that complies with the conditions outlined in the BLM right-of-way grant, other required permits, and the Final POD, as well as ensuring that activities are conducted in a manner that complies with all federal, state, and local regulations.

To help ensure that construction activities are conducted in a manner that complies with all federal, state, and local regulations, the Proponent will employ a team of environmental monitors (e.g., biological, cultural, and paleontological resources, and dust [where applicable]) to work jointly and cooperatively with the CIC (see Appendix A9 – Environmental Compliance Management Plan). Each of the Proponent's environmental monitors, including the certified dust monitor (where applicable), will provide copies of their daily reports to the CIC as described in Appendix A9.

2.1.2 Bureau of Land Management

The BLM will serve as the lead federal agency, and will designate a BLM Authorized Officer who will provide oversight for the Project. The BLM Authorized Officer will, on behalf of the BLM, be responsible for administering and enforcing the right-of-way grant and permit provisions for the BLM. The BLM will also ensure that mitigation measures and conditions of approval contained in this POD are adhered to during Project construction, operation, and maintenance. The BLM Authorized Officer will be responsible for written stop-and-resume work orders, and resolving any conflicts that arise relating to the Project on land administered by the BLM. Compliance will be managed by the BLM Authorized Officer and other BLM resource specialists as needed, in conjunction with the CIC. The process by which the BLM and the Proponent will conduct environmental monitoring, compliance, and reporting activities is described in Appendix A9.

2.1.3 Compliance Inspection Contractor

The CIC is an on-site agent of the BLM and other cooperating agencies, retained by the Proponent, who provides on-site compliance inspections and monitoring for the Project. This service helps to promote environmental protection and ensures compliance with the lead federal agency and cooperating agency's requirements, based on the commitments established in the POD. Prior to construction, the CIC will develop a Project Compliance Plan. This plan will describe how the Project Proponent will uphold, document, and manage environmental compliance with the terms specified in the right-of-way grant, the POD, land owner agreements, and all federal, state and local permits. The Project Compliance Plan will include, but is not limited to, the following elements:

- the roles and responsibilities of participants necessary to facilitate environmental compliance with the terms and conditions of the right-of-way grant and the POD in the field during construction
- a comprehensive inspection and monitoring program
- corrective procedures in the event of non-compliance
- a standard protocol for variance requests
- a communication plan describing primary channels of routine communication between parties for Project updates and compliance related issues
- a reporting process that includes forms and reports to be completed on a regular basis during the course of construction
- a comprehensive Project-specific environmental compliance training program that may include sections prepared by specific resource specialists

The CIC will report directly to the BLM, who will coordinate with other cooperating agencies, where appropriate. The duties of the CIC in support of the Project will include:

- preparation of a Project Compliance Plan
- coordination of Notice-to-Proceed meeting(s)
- preparation and maintenance of a Key Contacts List
- periodic meetings with the BLM Authorized Officer and resource specialists
- daily field inspection of the Project area
- coordination with the Proponent's Environmental Compliance Manager and environmental inspectors (see Appendix A9 – Environmental Compliance Management Plan)
- completion of a daily compliance inspection report and submittal of a weekly summary report with applicable photographs to the BLM and Proponent
- attendance at weekly construction meetings
- review of variance requests
- completion of an End of Construction Project Report

In addition to these duties, the CIC also will coordinate with the BLM, Proponent, and construction contractor(s) concerning work stoppage orders and temporary suspensions, noncompliance activities identified by environmental monitors, and the resolution of any noncompliance issues as they arise.

2.1.4 Construction Contractor(s)

The construction contractor(s) will be retained by the Proponent to construct the 500 kV transmission line(s) and ancillary facilities, including construction of new or improved roads, a Project communication system, and temporary work areas associated with construction activities. The construction contractor(s) will also be responsible for addressing any changes during construction and reclamation activities following the completion of construction activities. During peak construction periods, it is anticipated that as many as approximately 250 workers will be employed. The construction workforce may include the following:

- General Contractor, specializing in transmission line construction
- Substation Construction Contractor
- Survey Crews
- Tree Clearing Crews
- Road Construction Crews
- Foundation and Anchor Installation Crews
- Structure Steel Haul Crews
- Structure Assembly and Erection Crews
- Wire Installation Crews
- Cleanup Crews
- Restoration Contractor/Crews
- Quality Assurance Inspectors
- Drilling and Blasting Contractor
- Restoration/Reseeding Subcontractor

The Construction Contractor's Construction Manager will be responsible for enforcing the contract requirements. Provisions will be made in the contract for suspension of work, in whole or in part, and for corrections of faulty work performed by the contractor or others. There will be provisions for back charges to the contractor when necessary. All of the construction contractor(s) will be legally bound to the requirements of the POD through conditions that are included in the contract documents, such as information regarding the contractor's responsibility with respect to environmental protection measures. Compliance with environmental regulations will be a condition of employment.

2.2 COMMUNICATION PROCEDURES AND PROTOCOLS

Effective communication between the parties mentioned above is a critical component to the success of the Project. Communication protocols related to environmental compliance monitoring, reporting requirements, and Project variance requests are described further in Appendix A9 – Environmental Compliance Management Plan. Additional details regarding emergency agency notification (e.g., in case of wildfire, unanticipated discoveries of cultural resources, hazardous material spill, etc.) are presented in the various plans included as appendices to the POD. The selected construction contractor(s) will attend preconstruction conferences with the BLM and Proponent following award of the construction contract.

The CIC will develop a Project Contact Directory that will be updated by all parties, as needed, to provide a convenient reference during the construction phase of the Project. This contact list

will include the name, agency, office phone number, cell phone number, and email address of those individuals working on the Project; this list will be updated as required.

The Construction Contractor will be responsible for maintaining a list of all emergency notification contacts and numbers (local law and fire officials, hospitals, etc., [see Appendix A8 – Emergency Preparedness and Response Plan Guidelines]) for events such as wildfires, hazardous material spills, accidents, etc. The Proponent will be responsible for notifying private land owners of upcoming construction activities, where appropriate.

After construction, the Proponent will be responsible for maintaining the Key Contacts List and for all notifications required during the operation and maintenance of the Project.

SECTION 3 – PROJECT COMPONENTS

This section introduces the components associated with the construction of the Project, and contains a brief description of the facility design, including the overhead transmission lines, tower and pole structures, foundations, conductors, insulators and associated hardware, overhead ground wire, fiber optic communication regeneration (regen) station, access roads, and microwave communication sites; as well as information regarding induced currents on adjacent facilities, land requirements, and construction disturbance.

3.1 PROJECT FACILITIES

Typical characteristics of the Project facilities, including the overhead 500 kV transmission line(s) and associated facilities, substations, and ancillary facilities (e.g., fiber optic regen stations, ground electrode facilities, etc.), are provided in this section. Table 3-1 summarizes typical design characteristics of the 500 kV transmission line Project.

The design, construction, operation, and maintenance of the Project will meet or exceed the requirements of the National Electrical Safety Code (NESC) and U.S. Department of Labor, Occupational Safety and Health Standards (OSHA). The construction contractor(s) will be responsible for properly grounding all metallic fences that parallel the transmission line for more than 500 feet and are located within 150 feet of the centerline. Grounding will also include large metal buildings and other types of metallic objects within 150 feet of the centerline.

3.1.1 Overhead Transmission Lines

Two 500 kV overhead transmission lines will be constructed for the proposed Project. Both AC and DC configurations are considered as design options, as follows:

> **Option A**: Two transmission lines will be constructed and operated, each as a 500 kV single-circuit, AC facility.
>
> **Option B**: One transmission line will be constructed and operated as a 500 kV single-circuit AC facility, with a second transmission line constructed and operated as a 500 kV single-circuit DC facility.

Each transmission line will extend between the proposed SunZia East Substation and the permitted Pinal Central Substation for approximately 500 miles, depending on the alternative route selected. The transmission components include structures, foundations, conductors, insulators and associated hardware, overhead groundwire, and fiber optic facilities. Table 3-1 summarizes typical design characteristics for each of the two options, and Figure 3-1 is a diagram of the typical transmission line and right-of-way configuration.

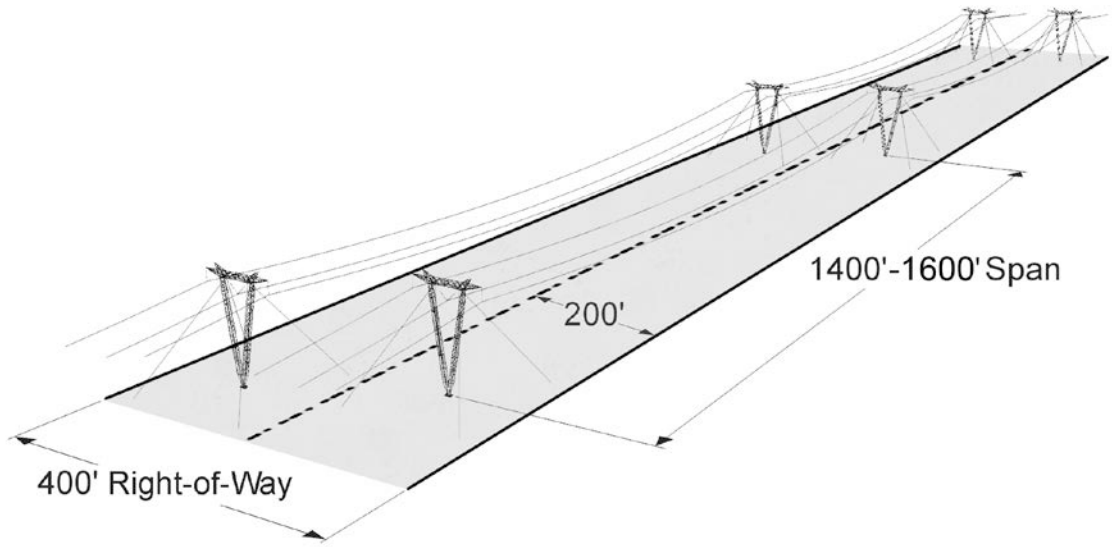

Figure 3-1. Typical 500 kV Transmission Line and Right-of-Way Configuration

Table 3-1. Typical Design Characteristics of the Proposed 500 kV Transmission Line Project

General Description		
Structure type	Guyed and self-supporting steel tubular and lattice structures	
Structure height	Typical 135 feet; range of height varies with span and terrain	
Span length	1,200 to 1,600 feet (3 to 4 structures per mile)	
Right-of-way width Typical	200 feet per transmission line (circuit) – 400 feet total for two transmission lines	
Narrow, due to special conditions	165 feet per transmission line (circuit) – 330 feet total for two transmission lines	
Electrical Properties		
Structure Base Areas	**Option A**	**Option B**
Nominal voltage in kilovolts	500 kV to 525 kV AC	500 kV to 525 kV AC and 500 kV DC
Capacity in megawatts	3,000 MW	4,500 MW
Circuit configuration (preliminary determination)	Horizontal, vertical, or delta	AC: Horizontal, vertical, or delta DC: Horizontal
Conductors 1590 ACSR 'Lapwing,' 1.5-inch diameter conductor (3 conductors/bundle)	3 conductor bundles per phase	AC: 3 conductor bundles per phase DC: 2 conductor bundles per phase
Minimum conductor clearance above ground (per NESC requirements)	30 to 35 feet	AC: 30 to 35 feet DC: 30 to 38 feet

Table 3-1. Typical Design Characteristics of the Proposed 500 kV Transmission Line Project

Land Permanently Disturbed		
Permanent Structure Base Area Required[1]		
Guyed (lattice or tubular) 4-foot diameter base plus 4 anchors (1 approximate 45-foot x 45-foot base area per line)	4,050 sq feet (2,025 sq feet per structure)	
Self-supporting Lattice 3-foot diameter x 4 legs (1 approximate 60-foot x 60-foot base area per line)	7,200 sq feet (3,600 sq feet per structure)	
Self-supporting Tubular 8-foot diameter (1 approximate 53-foot x 53-foot base area per line)	5,650 sq feet (2,825 sq feet per structure)	
Dead-end Lattice 6-foot diameter x 4 legs (1 approximate 55-foot x 55-foot base area per line)	6,050 sq feet (3,025 sq feet per structure)	
Dead-end Tubular [2] AC: 10-foot diameter (3 approximate 33-foot x 33-foot base areas for Option A; 1 approximate 45-foot x 45-foot for Option B) DC: 12-foot diameter (1 approximate 45-foot x 45-foot base area)	**Option A**	**Option B**
	6,550 sq feet (3,225 sq feet per structure)	4,050 sq feet (2,025 sq feet per structure)
Ancillary Facilities		
Fiber Optic Communication Regeneration Station	100 feet x 100 feet (0.23 acre); located at 75-mile intervals	
Ground electrode facility	One facility near each terminus (DC only)	
Access Roads[3]		
New roads	24 feet total width (20-foot-wide travelway and 2-foot-wide berms/drainage on each side)	
Improve existing roads	20-foot travelway and 2-foot-wide berms/drainage on each side = 24 feet total width	
Land Temporarily Disturbed		
Structure work area[4]	Each structure site will be 200 feet x 200 feet (0.9 acre)	
Construction yard	One yard every 40 miles; approximately 15 to 20 acres per site	
Concrete batch plant	One plant every 30 miles; approximately 3 to 5 acres per site	
Wire pulling/tensioning/splicing site (full) Wire pulling/tensioning/splicing site (reduced)	Approximately200 feet x 600 feet (2.8 acres); one every 18,000 feet, alternating every 9,000 feet with reduced site Approximately 200 feet x 400 feet (1.8 acres); one every 18,000 feet alternating every 9,000 feet with full site	

NOTES:
[1]Permanent structure base areas include the area surrounding each structure foundation necessary for Project maintenance, rounded up to the nearest 50 sq feet.
[2]Diameter indicated for each single pole; the dead-end structure for the AC line could have a single pole or three pole configuration.
[3]Typical main access road or spur road width indicated; maximum road widths will be specified in the POD and are dependent on terrain and construction specifications for selected transmission line route.
[4]Temporary structure work area is inclusive of permanent structure base area.
ACSR = Aluminum conductor, steel reinforced

3.1.2 Transmission Structures

Seven typical 500 kV structure types, as described below, could be used for the proposed Project, including the following:

Guyed structures

- Guyed "V" Lattice (GVL)
- Guyed "V" Tubular (GVT)

Self-supporting structures

- Self-Supporting Lattice (SSL)
- Self-Supporting Tubular (SST)
- Dead-end Lattice (DEL)
- Dead-end Tubular (DET)
- Dead-end Tubular, 3-pole (DET3)

Additional structure types may be identified during future engineering and design, but are anticipated to result in similar impacts to those identified in the EIS. The locations for each structure type would be determined during final design, and selected based on site-specific conditions (i.e., topography, terrain, constrained right-of-way, etc.) or to mitigate impacts resulting from the Project. Proposed structures vary in height, with none anticipated to exceed 200 feet, in order to remain below the threshold at which the structure may affect navigable airspace based on Federal Aviation Administration (FAA) regulations. Structure components are illustrated on Figure 3-2.

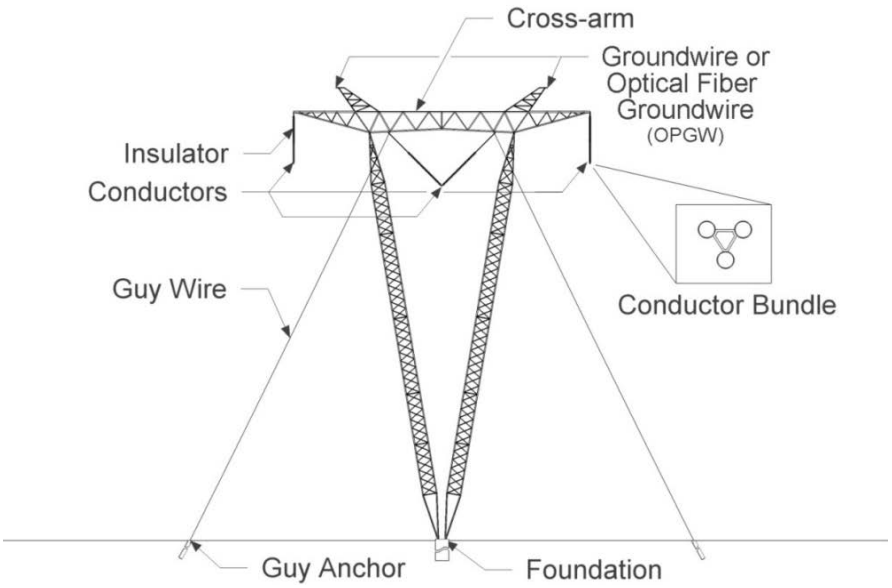

Figure 3-2. Typical 500 kV Structure Diagram

Similar structure types would be used for either the AC or DC transmission lines, with two primary exceptions: (1) DC structures would contain only two sets of bundled conductors, versus three sets for an AC structure, and (2) the guyed structures for the DC transmission line would be

vertical compared to V-shape structures for the AC transmission line. Each structure type that may be used for the Project is described in detail below. In addition, typical configurations and dimensions of each AC structure are depicted in Figure 3-3 through Figure 3-9, and typical configurations and dimensions of each corresponding DC structure (except for the 3-pole tubular dead-end structure) are depicted in Figure 3-10 through Figure 3-15.

3.1.2.1 Guyed "V" Lattice

The single-circuit, guyed, V-shaped lattice structure will be galvanized steel (Figure 3-3) with an average structure height of approximately 135 feet. The typical structure height will range between 130 and 160 feet, with an average span between structures of approximately 1,400 feet. This tangent structure will be used where the AC transmission line proceeds in a straight line or directly parallel to the adjacent transmission line, and up to an angle of 15 degrees. Due to the simplicity of the design and assembly, the GVL is cost efficient and results in less ground disturbance during construction than other structure design options. The DC line would require use of the guyed lattice tangent structure.

3.1.2.2 Guyed "V" Tubular

The single-circuit, guyed, V-shaped tubular structure will be made of self-weathering or galvanized steel (Figure 3-4), with a typical height of 135 feet, and will be a tangent structure used for AC lines as an alternate for the GVL. The typical height could range between 130 and 160 feet, with a typical span of approximately 1,400 feet between structures. The DC line would require use of the guyed tubular tangent structure (Figure 3-11).

3.1.2.3 Self-Supporting Lattice

The single-circuit, self-supporting lattice structure will be made of galvanized steel (Figure 3-5), with a typical structure height of 135 feet. The typical structure height could range between 130 and 160 feet, with a typical structure span of approximately 1,500 feet. The SSL could be used as a tangent structure, but also can accommodate larger angles (15 to 90 degrees) and longer spans than the GVL or GVT structures. However, the SSL is heavier and requires larger foundations. Maintenance activities are faster on the SSL than on other structure design options, due to the configuration of the circuits and climbing legs.

3.1.2.4 Self-Supporting Tubular

The single-circuit, self-supporting tubular structure will be made of self-weathering or galvanized steel (Figure 3-6), with a typical structure height of 145 feet. The typical structure height could range between approximately 145 and 170 feet, with a typical structure span of approximately 1,000 feet. The SST has a smaller footprint and typically will be used in areas of narrow or constrained right-of-way; however, these structures would be taller and have a shorter span (requiring more structures per mile) than other tangent structures proposed for the Project.

3.1.2.5 Dead-End Lattice

A single-circuit, self-supporting, dead-end lattice structure made of galvanized steel (Figure 3-7) will primarily be used for large angles or terminations. The DEL has a larger footprint than the SSL, due to a larger base and a wider horizontal configuration. The typical structure height is approximately 135 feet, with typical structure height ranging between 130 and 160 feet.

3.1.2.6 Dead-End Tubular

A single-circuit, self-supporting, dead end tubular structure made of self-weathering or galvanized steel (Figure 3-8) will primarily be used for larger angles in those areas where right-of-way may be too constrained to accommodate a DEL structure. The average structure height is approximately 145 feet, with typical structure height ranging between 130 and 160 feet.

3.1.2.7 Dead-End Tubular, 3-Pole

The dead-end tubular, 3-pole structure (alternative to the DET) is a self-supporting tubular steel structure also used for larger angles; however, the DET3 includes three poles, each with a single conductor bundle (Figure 3-9). The typical structure height is approximately 100 feet. The DET3 will be used for the AC structure in areas where a lower height is desired, although the three adjacent structures will require additional right-of-way and have a larger footprint.

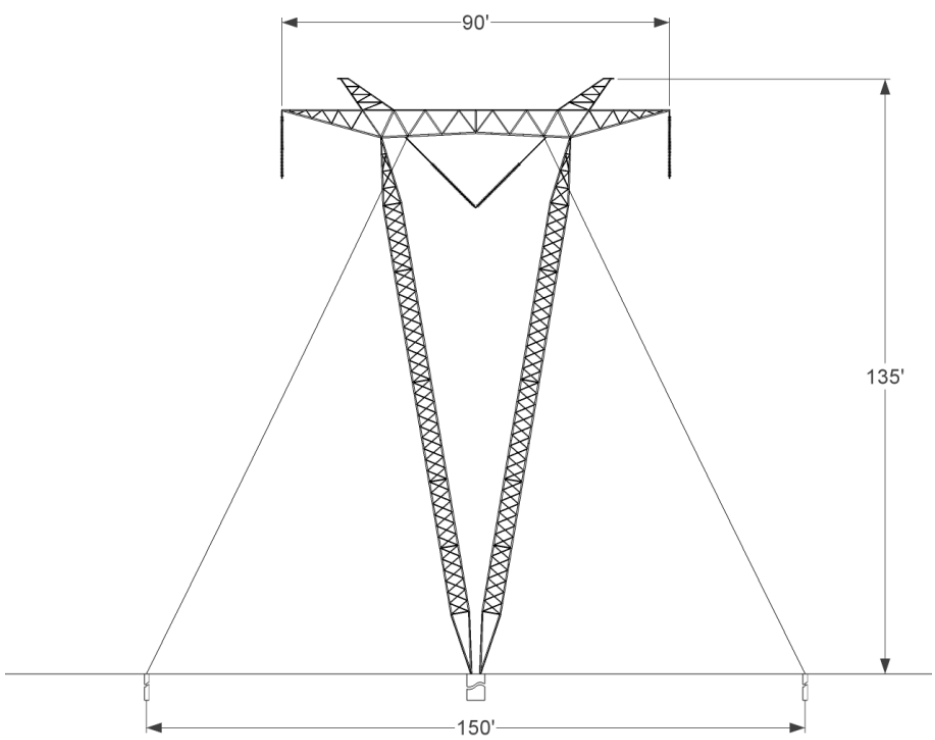

Figure 3-3. Typical AC Guyed "V" Lattice Tangent Structure

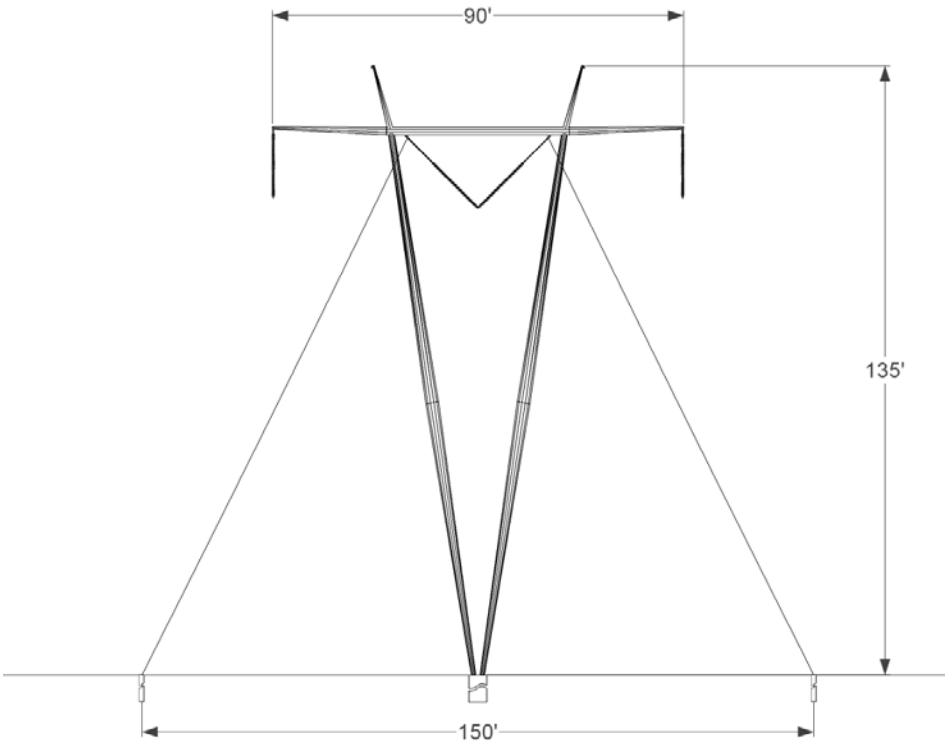

Figure 3-4. Typical AC Guyed "V" Tubular Tangent Structure

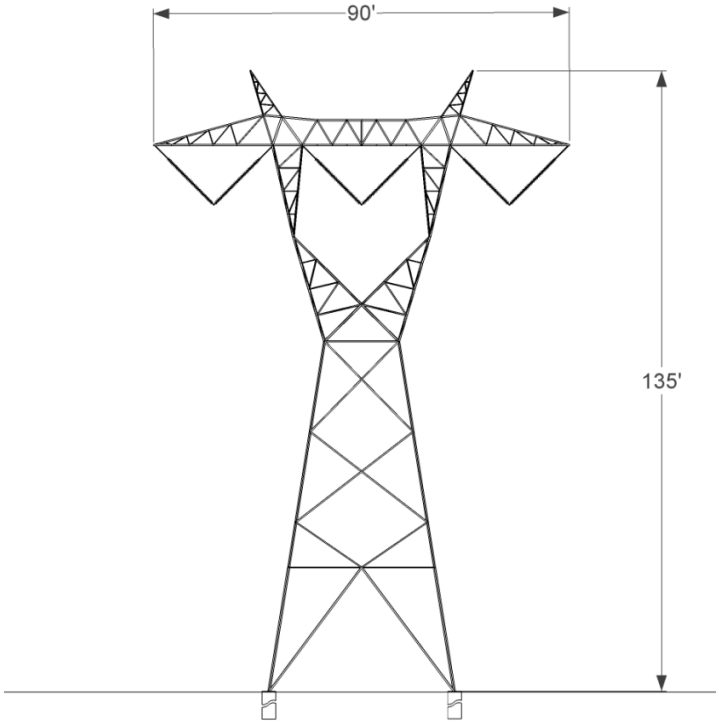

Figure 3-5. Typical AC Self-Supporting Lattice Tangent Structure

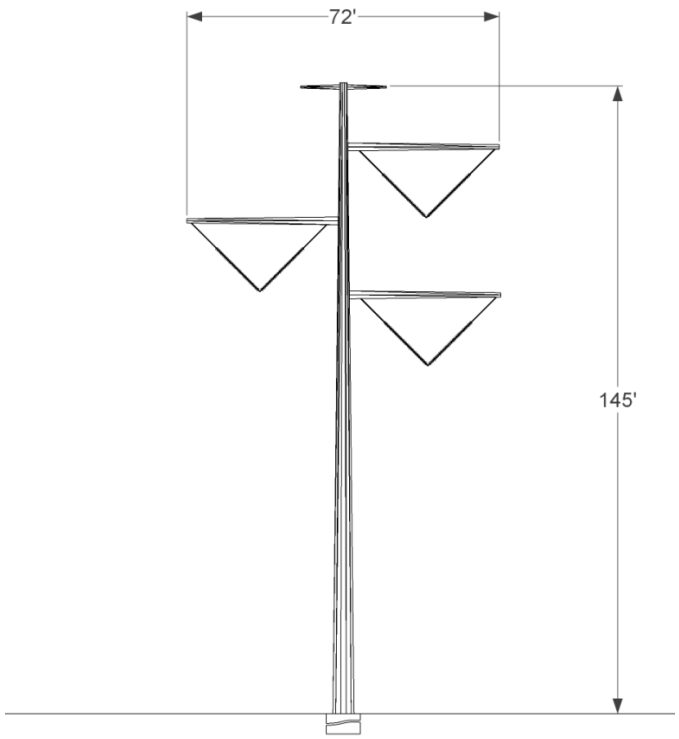

Figure 3-6. Typical AC Self-Supporting Tubular Tangent Structure

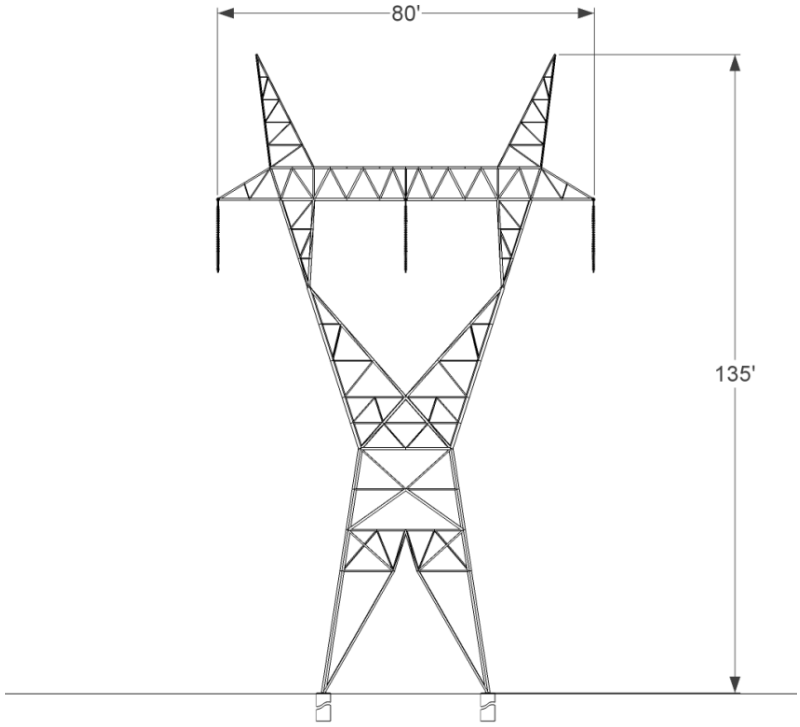

Figure 3-7. Typical AC Self-Supporting Lattice Dead-End Lattice Structure

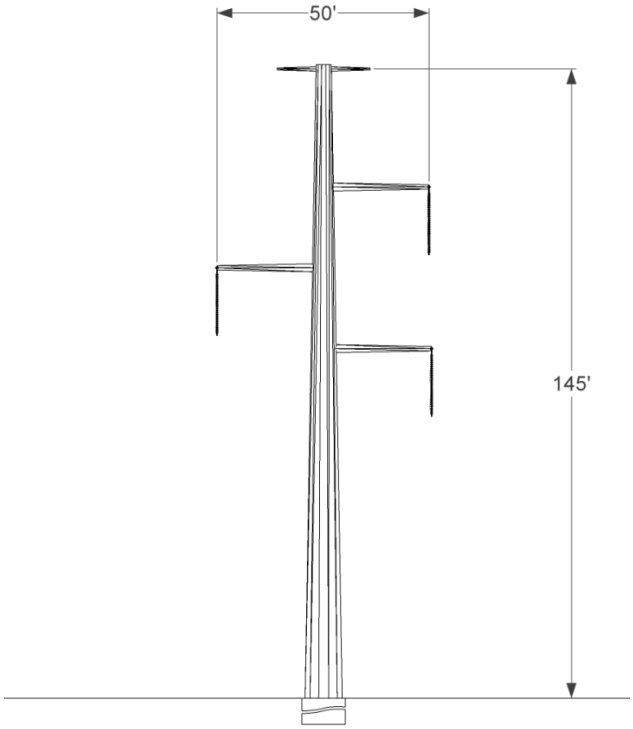

Figure 3-8. Typical AC Self-Supporting Dead-End Tubular Structure

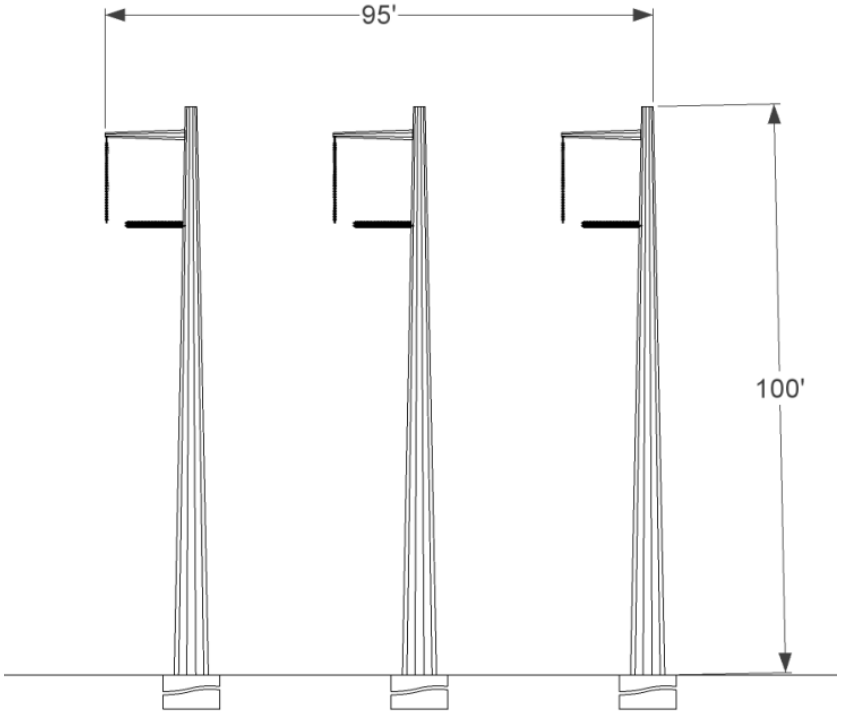

Figure 3-9. Typical AC Self-Supporting Dead-End Tubular 3-Pole Structure

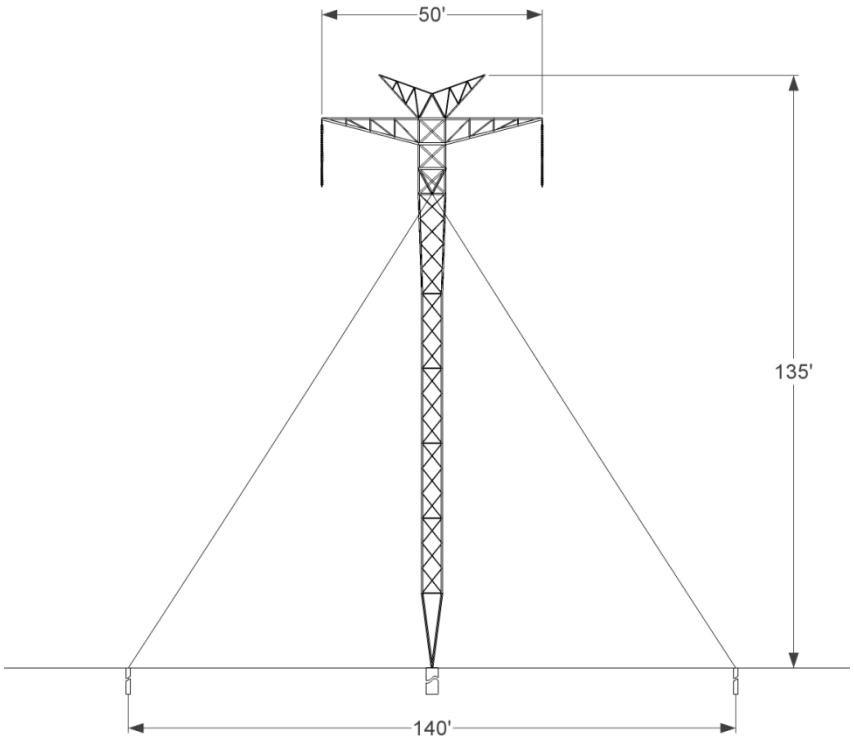

Figure 3-10. Typical DC Guyed Lattice Tangent Structure

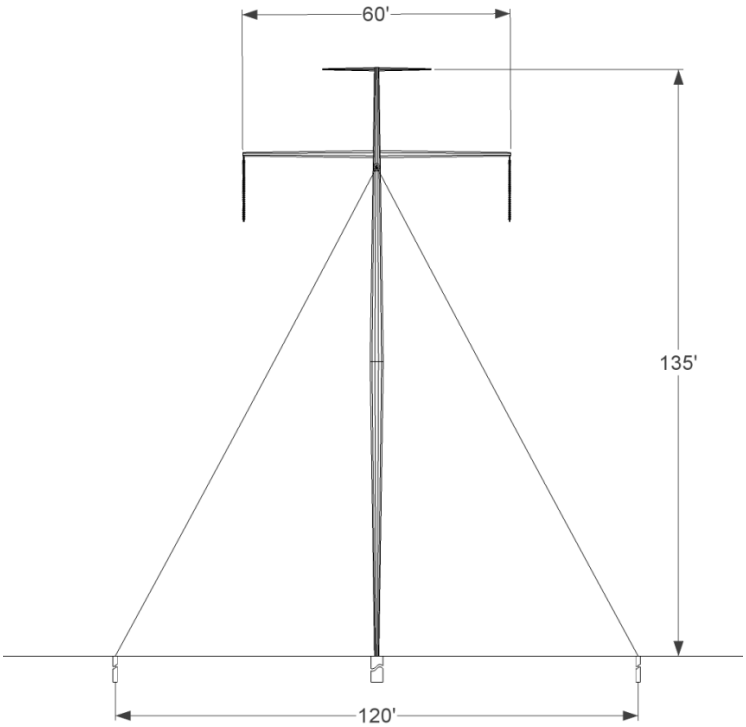

Figure 3-11. Typical DC Guyed Tubular Tangent Structure

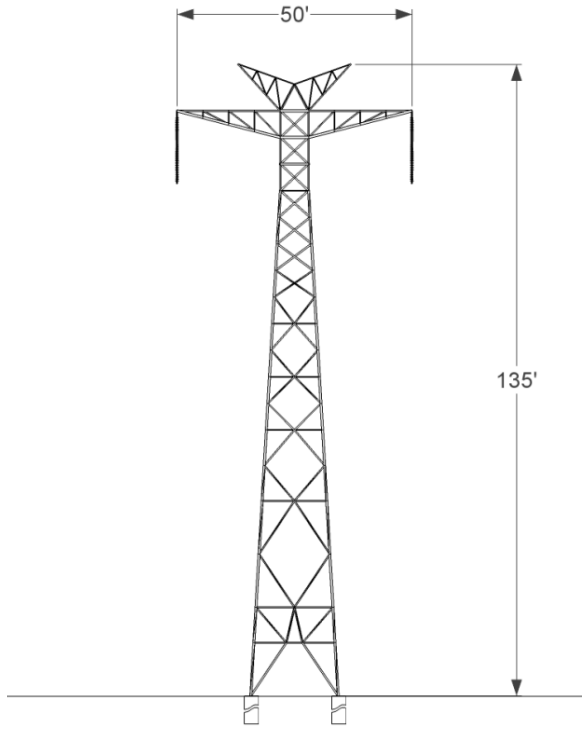

Figure 3-12. Typical DC Self-Supporting Lattice Tangent Structure

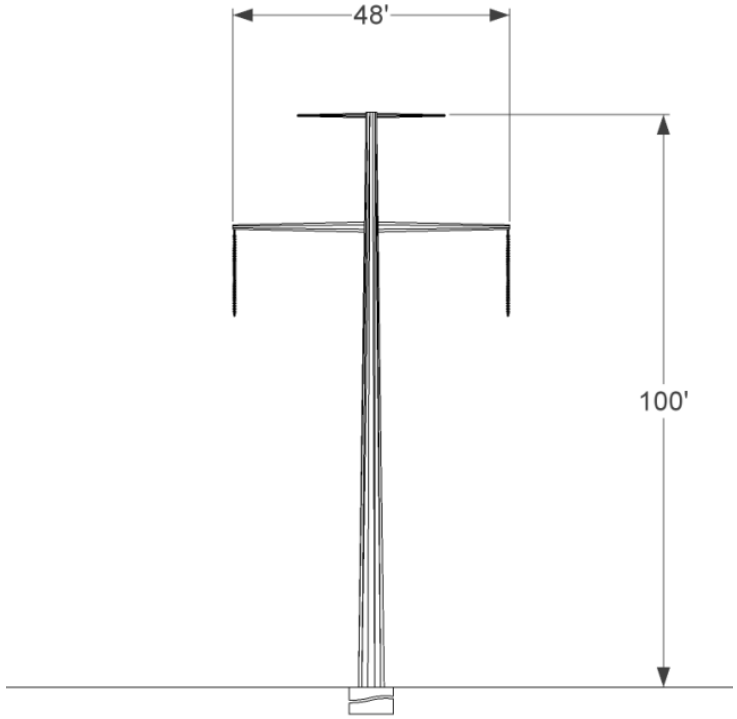

Figure 3-13. Typical DC Self-Supporting Tubular Tangent Structure

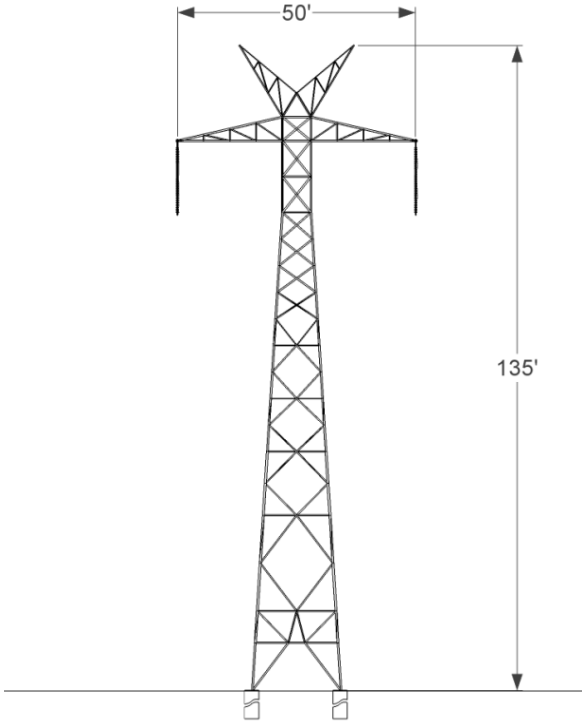

Figure 3-14. Typical DC Self-Supporting Lattice Dead-End Structure

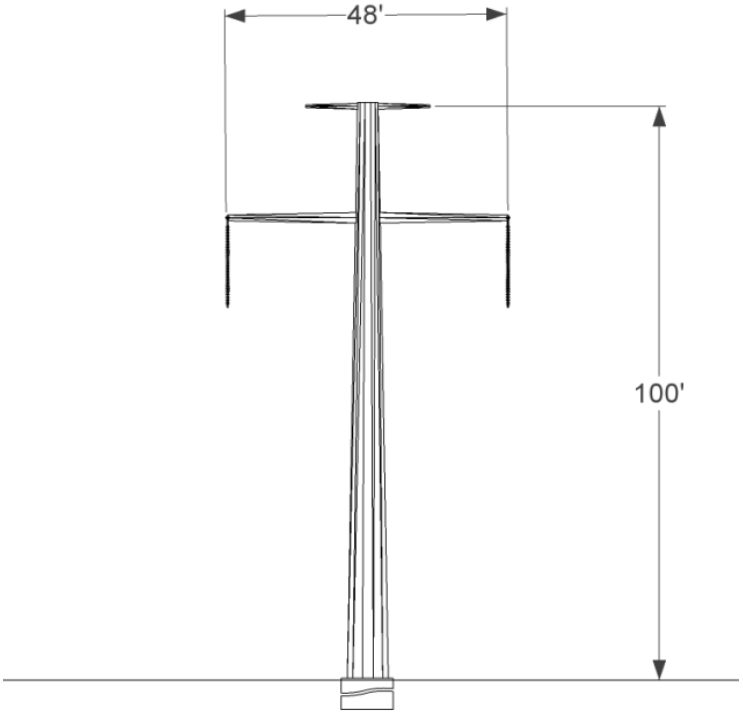

Figure 3-15. Typical DC Self-Supporting Dead-End Tubular Structure

3.1.3 Foundations

Each structure type requires specific foundations; however, foundation design is similar for either AC or DC structures. The guyed "V" (lattice or tubular) structures require a center pier foundation and four anchors for the guy wires.. The center pier will be either cast-in-place concrete, a precast foundation, or grillage foundation (a grillage consists of buried galvanized steel members designed to resist foundation loads). Grouted soil, grouted rock, disk, or log anchors will be used. For drilled anchors, each anchor hole will be 6 to 12 inches in diameter and range in depth from 10 to 40 feet. For disk or log anchors, typical excavations are 6 feet by 3 feet wide, and 10 to 15 feet deep.

Each SSL structure requires four cast-in-place drilled pier footings, each ranging from 3 to 6 feet in diameter (based on soil conditions) and 15 to 40 feet in depth. The footings foundations will be installed by placing reinforcing steel and a structure stub into the foundation hole, positioning the stub, and encasing the stub in concrete.

The SST structures are installed on a single drilled pier foundation, which will typically be 6 feet in diameter; but may range from 4 to 8 feet in diameter based on soil conditions, and will be 20 to 50 feet deep.

The DEL structures require four footings installed on drilled pier foundations, which are typically 6 feet in diameter; but may range from 4 to 8 feet in diameter based on soil conditions. The drilled pier foundations will be 20 to 50 feet deep.

The DET structures (either single pole or 3-pole configuration) are installed on a single drilled pier foundation (per pole) which typically would be 10 feet in diameter, but may range from 8 to 12 feet in diameter based on soil conditions. The drilled pier foundation will be 20 to 50 feet deep.

3.1.4 Conductors

The conductors are the wire cables strung between transmission line structures over which the electric current flows. Conductors for the Project will be aluminum stranded with a steel reinforced core, known as the aluminum conductor steel-reinforced (ACSR) design. The aluminum carries most of the electric current, and the steel provides tensile strength to support the aluminum strands. The AC transmission line will consist of three phases for the single-circuit, including a bundle containing three conductors per phase.

The minimum conductor height above ground for the AC transmission line will be 30 to 35 feet, at 176 degrees Fahrenheit conductor operating temperature, based on NESC and the Proponent's design standards. The exact height of each structure would be governed by topography and safety requirements for conductor clearance.

The DC transmission line would use the same conductor as the AC transmission line, except that each DC structure would contain only two sets of bundled conductors. Minimum conductor height above ground for the DC transmission line would be 38 feet, based on NESC standards.

Based on Avian Power Line Interaction Committee recommendations (Edison Electric Institute and Avian Power Line Interaction Committee 2006), adequate 3 conductor phase spacing (60 inches or greater for avian protection) will be implemented.

Conductors are supplied on reels up to approximately 9,000 feet in length. At the location where one reel ends and another begins, splicing is required to make a continuous run along the conductor. Splices may be either compression type or implosive charge type. If implosive type splices are used, the construction contractor(s) will incorporate appropriate references and requirements into Appendix A5 – Blasting Plan Methodology.

In order to reduce vibration fatigue on installed conductor and associated hardware, vibration dampers may be installed on the conductor where required, and as specified in the final design.

3.1.5 Insulators and Associated Hardware

Insulators, which are made of an extremely low conducting material such as porcelain, glass, or polymer, are used to suspend the conductors from each structure. Insulators inhibit the flow of electrical current from the conductor to the ground, the structure, or another conductor. Insulator material will be selected based on electrical properties and maintenance practices, according to final Project engineering. Assemblies of insulators are designed to maintain electrical clearance between the conductors, structure, and ground. A permanent assembly of insulators, ranging from 20 to 28 feet long, will be used to position and support each of the three conductor bundles to the structures. Insulator assemblies may be either “V” shaped or “I” shaped (vertical) for the tangent structures, and “I” shaped (horizontal) for the dead-end structures. See Figures Figure 3-1through 3-13 for illustrations of the insulators for the proposed AC and DC structure types.

3.1.6 Overhead Groundwire and Electrodes

To protect conductors from lightning strikes, two overhead groundwires will be installed on the top of the structures. Current from lightning strikes will be transferred through the groundwires and structures into the ground. The groundwires will be composed of extra-high strength steel with 0.5-inch diameter. One or both of the overhead groundwires will be a 1-inch diameter fiber optic groundwire (OPGW), which will facilitate data transfer—required for system control and monitoring between the transmission facilities—along the fiber path.

The DC structures (Option B) would use the same overhead groundwires as the AC structures. In addition, Option B would require two ground electrode facilities, one near each AC/DC converter station, to maintain electrical current continuity during emergent conditions. Ground electrodes provide an earth return for the electrical current when one of the poles of the DC line is out of service. These conditions are most often the result of an unexpected outage on the transmission line, which would result in the electrical current flowing through the earth for a short period of time (typically 10 minutes to less than one hour).

Each ground electrode facility would consist of a network of drilled deep earth wells (electrodes), grouted to a depth of 100 feet or more, depending upon the geological structure and electrical parameters of the area. Each site may be up to 600 acres in size (although other uses

may be allowed within the site). Each well would be electrically interconnected to a small control building via buried low voltage underground cables, and each well and the electrode line would be continuously monitored via a telecommunications link that would use fiber optic or fixed radio communications equipment. Ground current would be effectively shared through the buried electrode network, interconnecting the wells to create a very low resistance earth connection by distributing the ground current over a large area. Surface access to the wells would be via utility access vault type arrangements to prevent any public access to the well connections or the electrode components.

3.1.7 Grounding

Ground rods will be installed next to the structure foundations to prevent lightning strikes from damaging the overhead conductors. Lattice towers will have up to four ground rods installed per structure, and steel-pole structures will have up to two ground rods installed per structure. After the ground rods have been installed, the grounding will be tested to determine the resistance to ground. If the measurements indicate a high resistance, counterpoise will be installed that will consist of trenching in-ground wire to a depth of 12 inches in non-cultivated land and 18 inches in cultivated land, with a ground rod driven at the end. The counterpoise will be contained within the limits of the right-of-way and may be altered or doubled back and forth to meet the requirements of the Project.

3.1.8 Fiber Optic Regeneration Station

As the data signal passes through the optical fibers in the groundwire, the signal degrades with distance. Fiber optic regeneration (regen) stations are required to amplify the system control and monitoring signals carried over the OPGW attached to the transmission structures. Regen sites will be located approximately every 75 miles within the proposed substations (see Section 3.1.12), and at other remote sites located along the transmission line route approximately half way between the substations (specific locations for the remote sites will be identified in the Final POD). The remote regen sites will be adjacent to the proposed transmission lines and within the right-of-way, at locations near existing low-voltage electric distribution lines, and easily accessible by vehicle. A permanent access road, up to 12 feet wide, will be required for maintenance purposes for each site. Permanent access roads built for the transmission lines will be used to the extent practicable. An extension of a distribution line will be needed to service each facility.

The remote regen sites will be in a fenced area of 100 feet by 100 feet, with typical building dimensions 12 feet wide by 32 feet long by 9 feet tall. The OPGW cable supported on the transmission structures will be routed in and out of the regen site building from the nearest transmission structure, either underground or overhead, along two separate paths. Electronic equipment that is required to support the fiber optic cable installation will be located inside the building. At each remote site, an emergency diesel and/or propane generator will be installed to provide backup power should an outage of the local electric distribution supply system occur.

3.1.9 Other Electrical Hardware

In addition to the conductors, insulators, and overhead shield wires, other hardware will be installed on the tower as part of the insulator assembly to support the conductors and shield wires. This hardware will include fasteners, clamps, shackles, links, plates, and various other hardware composed mostly of galvanized steel and aluminum. To the extent possible, electrical hardware will be specified as "corona-free," in order to reduce the effects of audible noise and electrical stress caused by corona in high-voltage applications.

3.1.10 Other Non-Electrical Hardware

Other hardware not associated with the transmission of electricity may be installed as part of the Project. This hardware may include aerial marker spheres or aircraft warning lighting, as required for the conductors or structures per Federal Aviation Administration (FAA) regulations. Structure proximity to airports and structure height are the determinants of whether FAA regulations will apply, based on an assessment of wire/tower strike risk. The Proponent does not anticipate structure lighting will be required, since all proposed structures are less than 200 feet tall and are not near airports that require structure lighting.

3.1.11 Access Roads

Five types of access will be used for this transmission line: paved roads, dirt roads that will not require improvements, dirt roads that may require improvements, new bladed access roads, and overland access. For a more detailed description of these access types and stipulations associated with them, see Appendix A3 – Transportation Management Plan.

Access to the right-of-way will be via existing roads and trails, to the extent practicable. These existing roads and trails will be used in their present condition without improvements, unless improvements are required or are deemed to be in the best interest of the Project and for future use. In areas where improvements are required, roads and trails will be graded to provide a smooth travel surface. Where existing roads and trails can be used to access the right-of-way, only spur roads to each structure site will be required. Access on the right-of-way, other than in specific areas, will require a road graded to a width of up to 20 feet, with a 2-foot berm on either side. New roads will typically go directly from structure to structure, except on hillsides, ridgebacks, rock outcrop areas, wash crossings, treed areas, or in areas where sensitive environmental resources can be avoided. In such cases, the road will follow suitable topography from structure to structure and will be built in areas that generally cause the least amount of overall disturbance.

New roads that must be graded for access in steep terrain (side-hill roads) will most likely exceed a 24-foot width of disturbance, due to cut and fill conditions; however, the travel surface width will not exceed 20 feet (Figure 3-16).

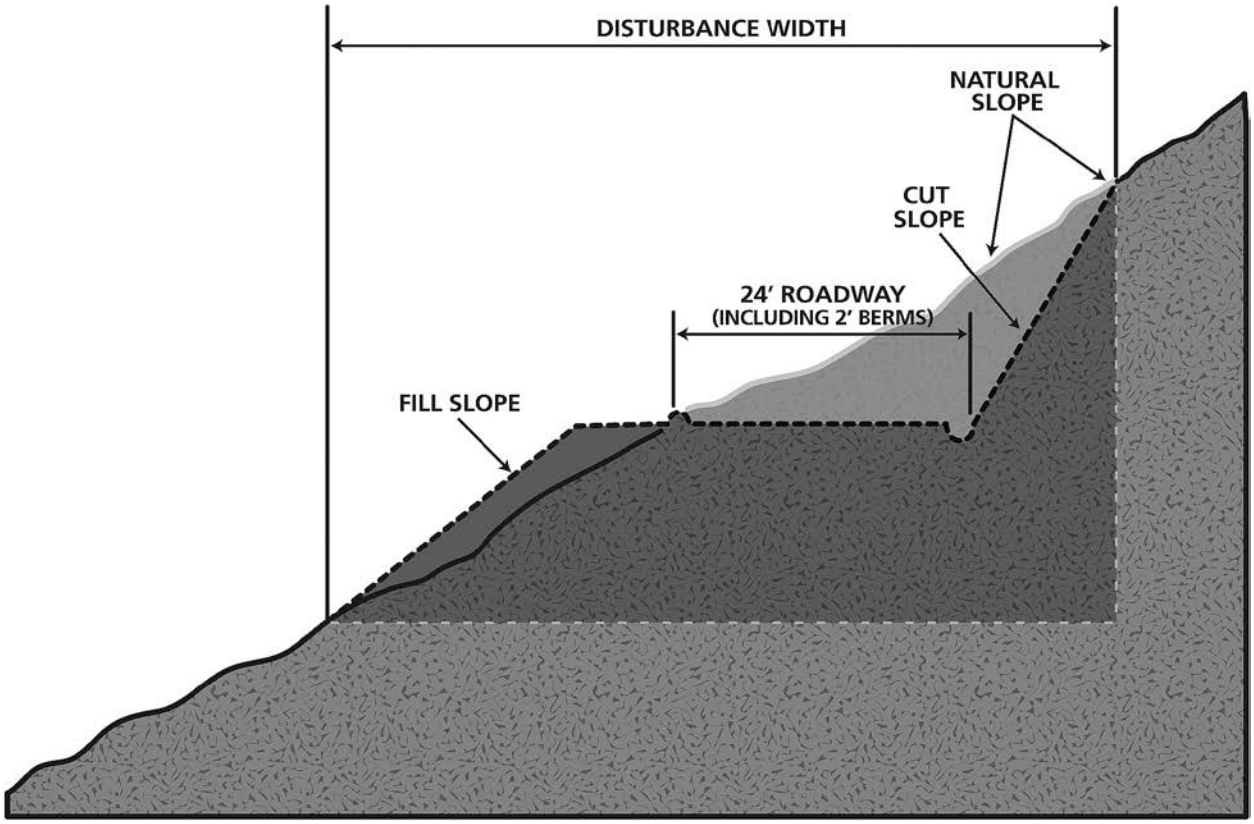

Figure 3-16. Typical Roadway Cut and Fill Conditions

3.1.12 Substations

Up to five new substations will be required with the proposed Project. Each substation will require 25 to 60 acres of land, dependent on whether an AC only or an AC/DC facility is installed at the site. The majority of the acreage for the substation sites will be used for substation components; however, a portion of the site acreage will be used as a buffer for placement of transmission structures, both entering and exiting the substation.

The maximum height of structures in the substation will be approximately 170 feet. The substation yards will be open air and include substation equipment such as transformers, circuit breakers, disconnect switches, lightning/surge arrestors, reactors, capacitors, bus (conductor) structures, and a microwave antenna. The substation yards will be surrounded by an 8-foot-high chain-link fence topped with barbed-wire. Typical design characteristics for the substations are listed in Table 3-2. The estimated areas of ground disturbance for each substation are listed in Table 3-3.

Table 3-2. Typical Design Characteristics of a 500 kV Substation

Equipment	• Transmission line take-off structures • Power circuit breakers • Power transformers • Switching equipment • Bus work or bus conductor	• Control house • Microwave antenna • Current limiting reactors • Capacitor banks
Access road • Width • Road surface • Grading	• Minimum 24 feet wide, based on site-specific conditions (a maximum of 28 feet, including drainage/berms on each side) • Gravel • Heavy road base to support larger equipment	
Fire protection facilities	• Fire-wall barriers for protection from transformers	
Substation/Reactive compensation grounding	• Copper wire will be used to facilitate personnel ground protection	
Land permanently disturbed[1]	• Each substation site: 35 to 85 acres	
Land temporarily disturbed	• Each substation site: 5 to 20 acres (in addition to permanent disturbance)	
Voltage	• Multiple voltages; can change voltage from 500 kV to 345 kV to 115 kV	

[1] May include areas outside fenced areas shown in Figure 3-17 through Figure 3-20 and Figure 3-23 for transmission structures.

As proposed, AC transmission lines will interconnect the proposed SunZia East Substation at the eastern terminus with the Pinal Central Substation at the western terminus. The SunZia East Substation would be located in Lincoln County, New Mexico, near US Route 54 and County Road A035. The Pinal Central Substation has been permitted and will be constructed by SRP at a location in Pinal County, Arizona, near US Route 287 and US Route 87. The Project will also include three proposed intermediate substations described below.

- Midpoint Substation is proposed to be located in Luna County, near the town of Deming
- Lordsburg Substation is proposed to be located in Hidalgo County, New Mexico, near the existing Hidalgo Substation
- Willow-500 kV Substation is proposed to be located in Graham County, Arizona, near Highway 191 and the existing TEP 345 kV transmission lines

The DC transmission line would not include interconnections with these intermediate substations, but would require AC/DC converter stations in the substation at each terminus. Figure 3-17 through Figure 3-21 illustrate the substation layouts for the proposed substations. An elevation view of a typical 500 kV substation is provided in Figure 3-22; a typical 500 kV DC converter station is shown in Figure 3-23.

Table 3-3. Substations: Estimated Temporary and Permanent Ground Disturbance (in acres)

Substations	Option A – Temp	Option A – Perm	Option B – Temp	Option B – Perm
SunZia East	15	45	20	85
Willow-500 kV	5	40	5	35
Midpoint	5	60	5	60
Lordsburg (Hidalgo)	5	40	5	35
Pinal Central[1]	5	0	10	45
Subtotal	**35**	**185**	**45**	**260**

NOTE:

[1]Disturbance areas indicated are the portion within the Pinal Central Substation for the SunZia transmission line facilities (see Table 3-5 – Disturbance Breakdown for the SunZia Project [To Be Determined Upon Selection of Project Alternative])

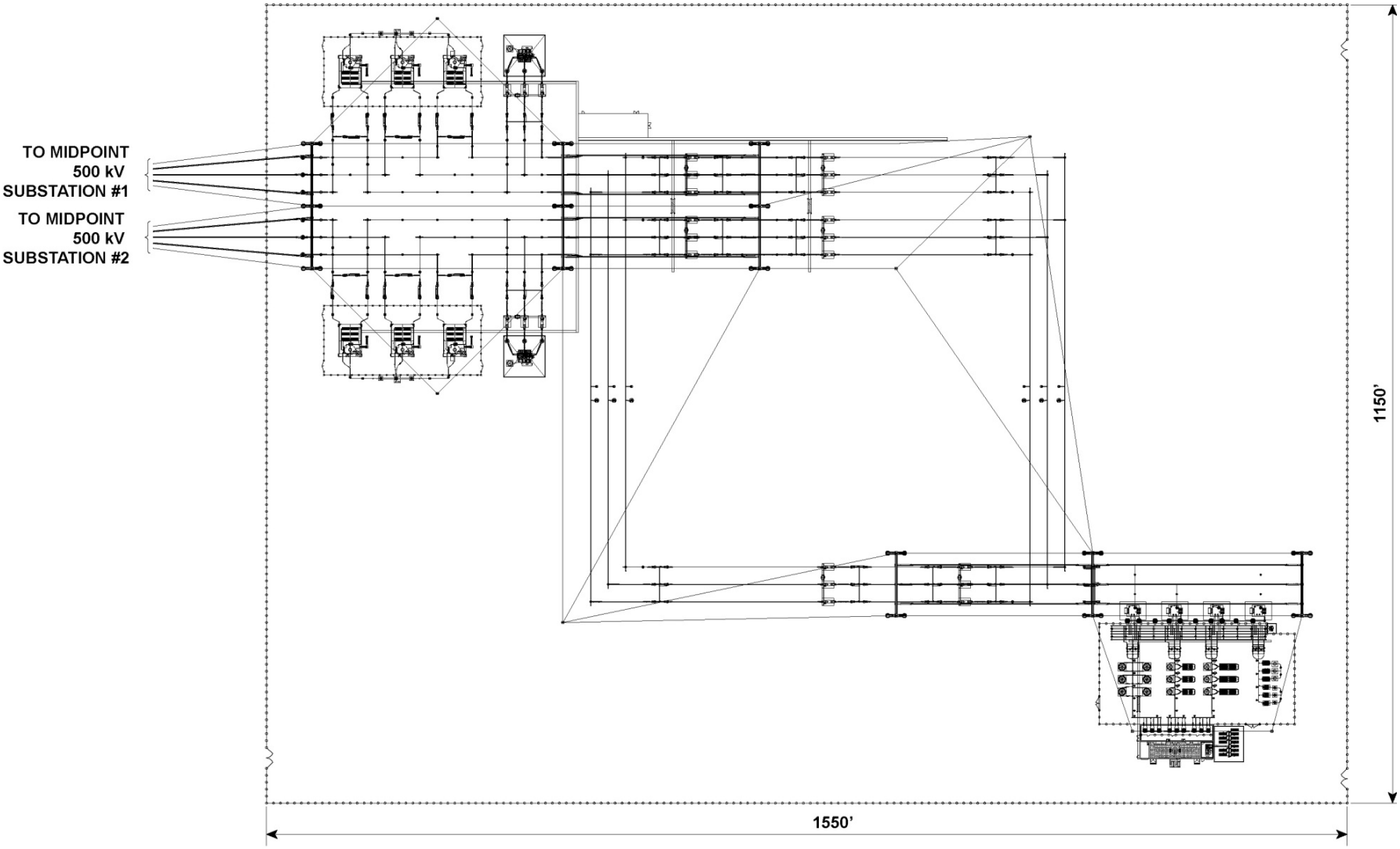

Figure 3-17. Proposed Substation Layout – SunZia East

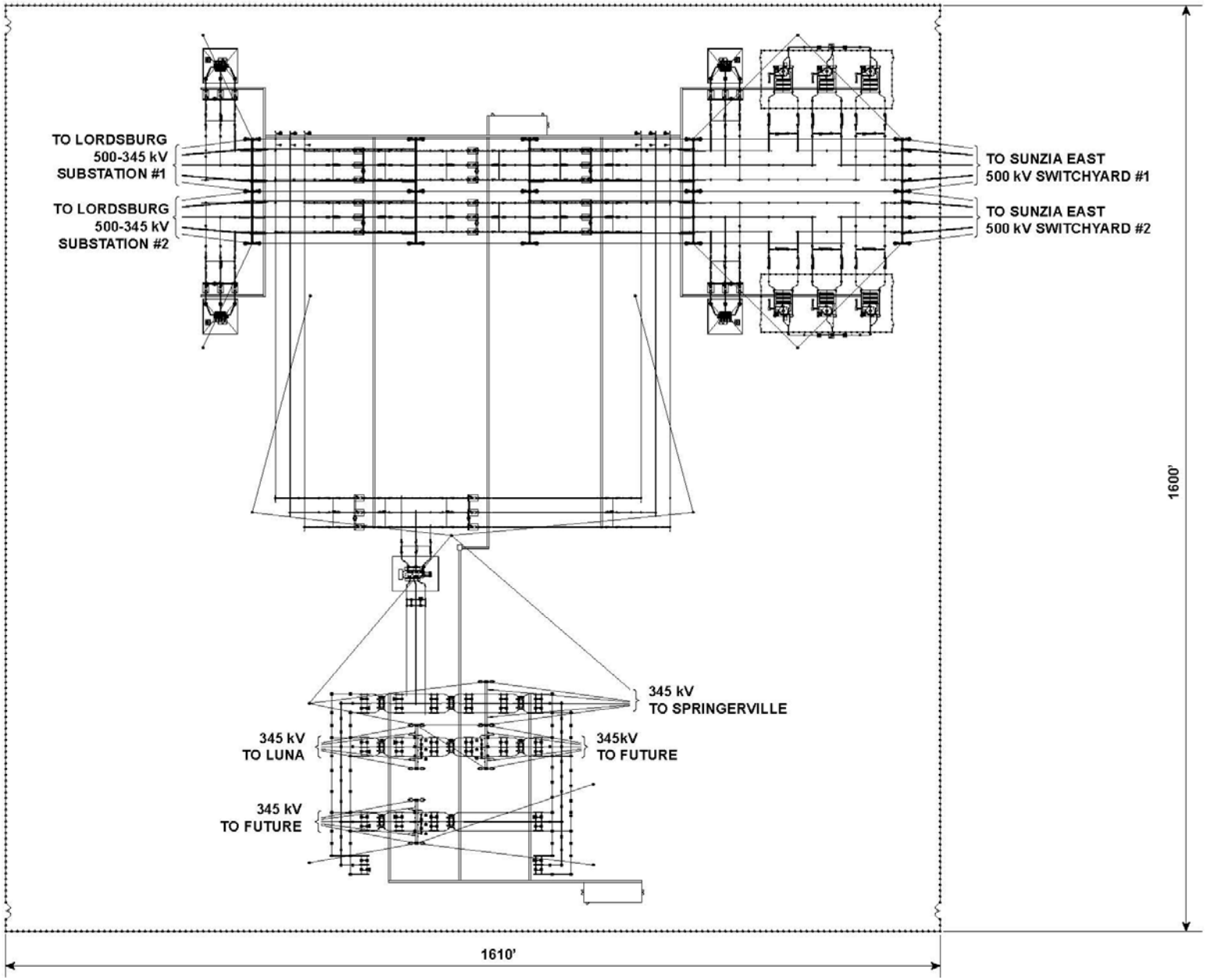

Figure 3-18. Proposed Substation Layout – Midpoint

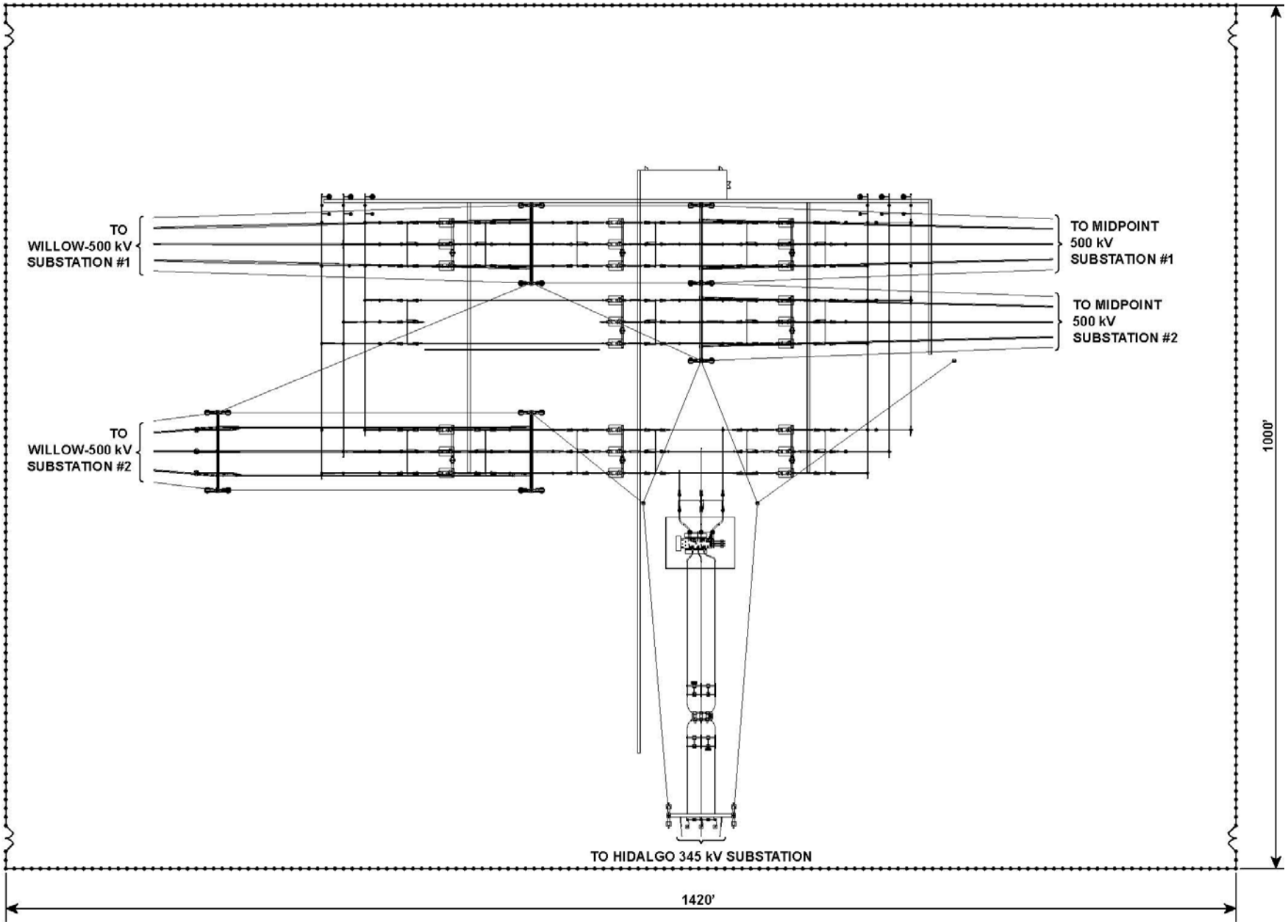

Figure 3-19. Proposed Substation Layout – Lordsburg

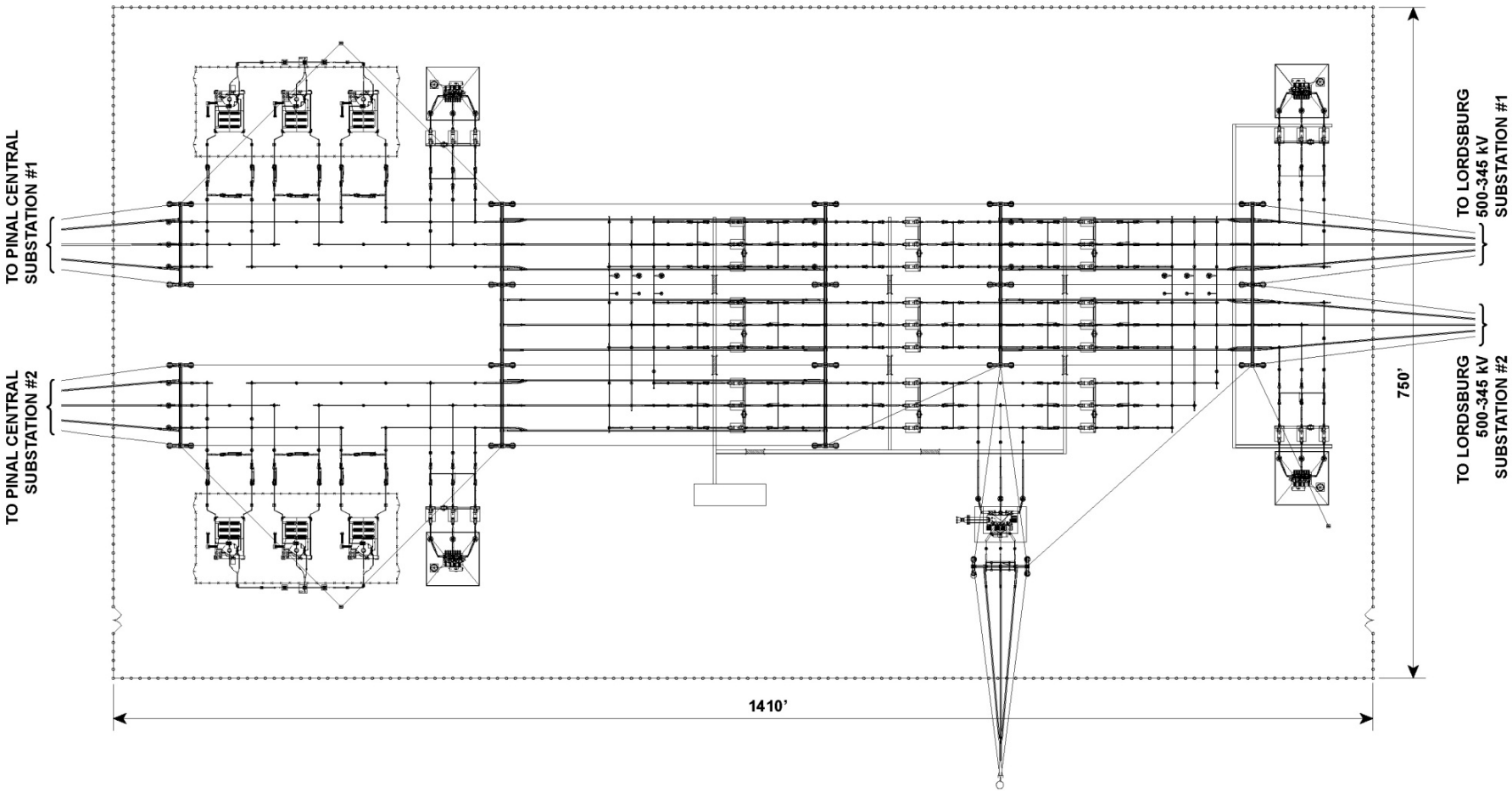

Figure 3-20. Proposed Substation Layout – Willow-500 kV

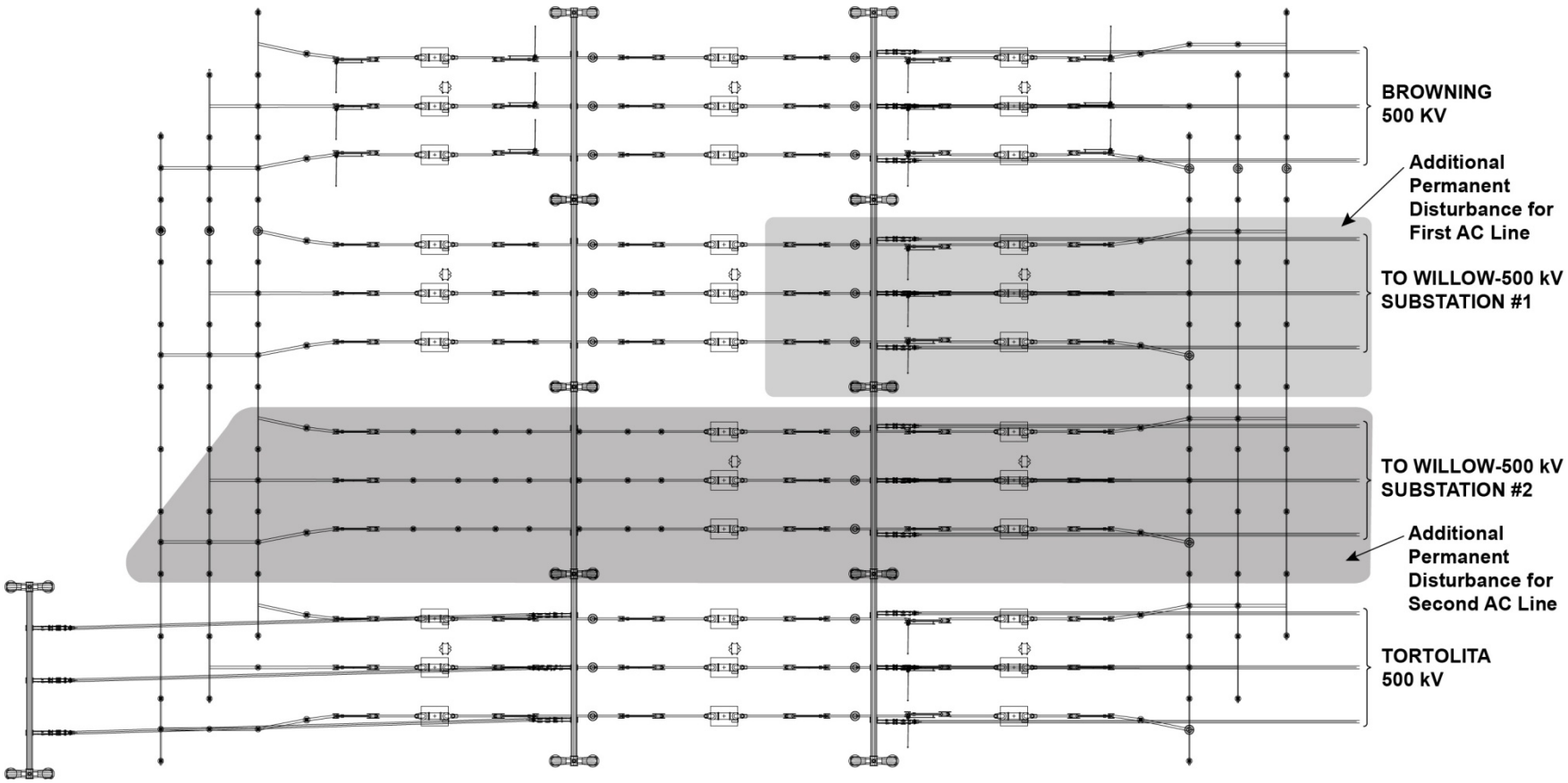

Figure 3-21. Proposed Substation Expansion Layout – Pinal Central

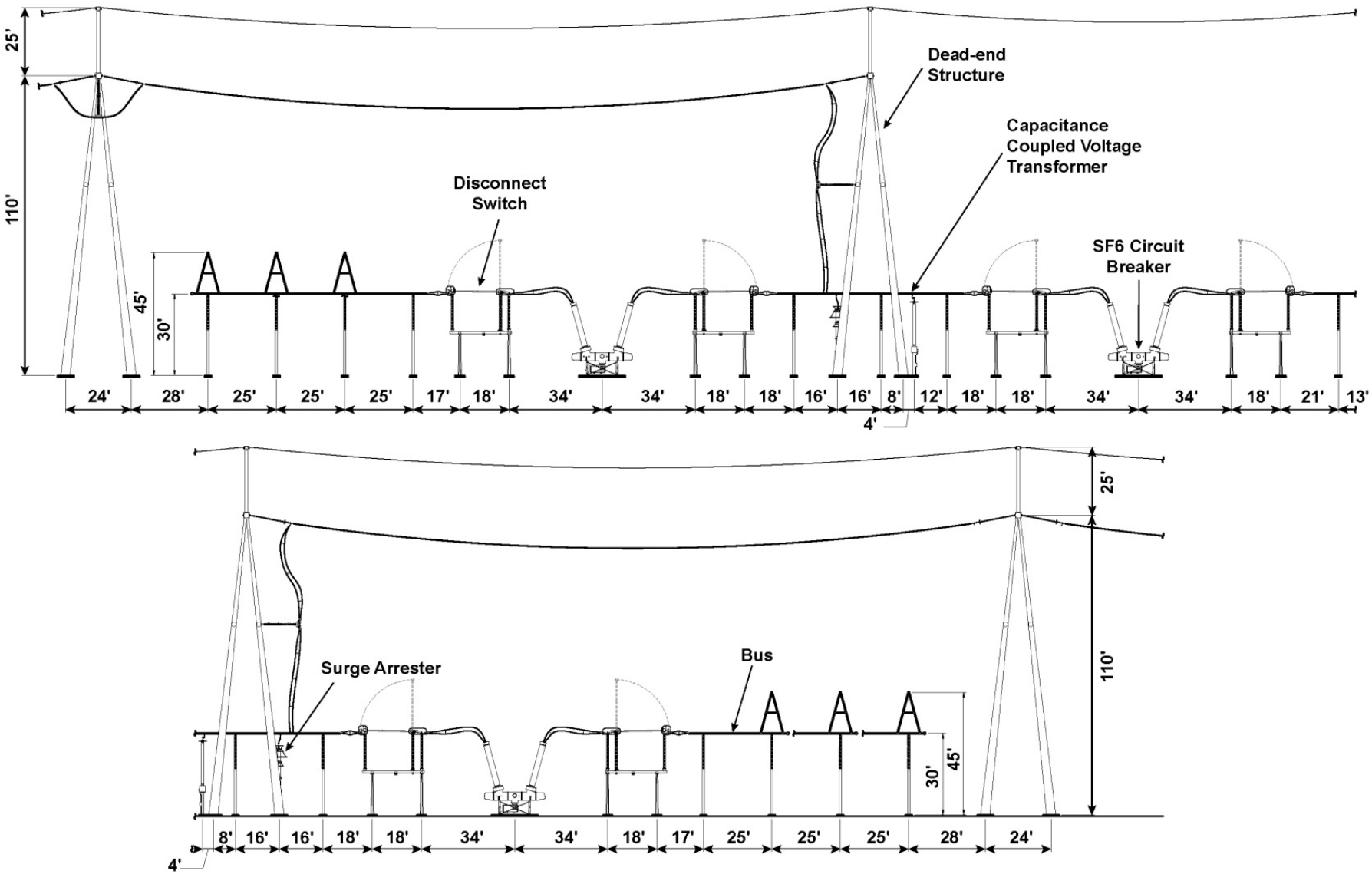

Figure 3-22. Typical 500 kV Substation Schematic – Elevation View

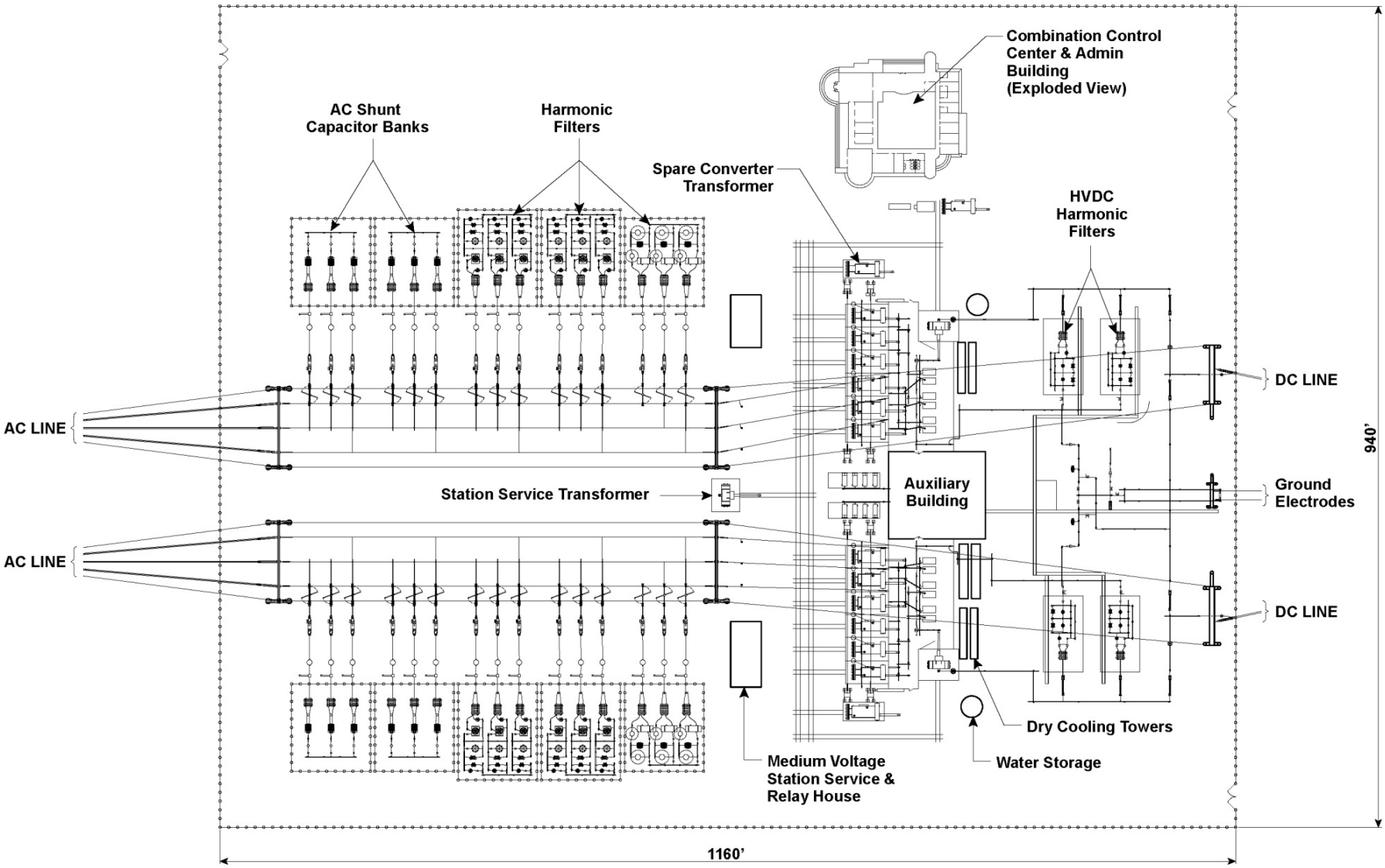

Figure 3-23. Typical 500 kV DC Converter Station

3.2 INDUCED CURRENTS ON ADJACENT FACILITIES

AC transmission lines, such as the Project transmission line(s), have the potential to induce currents on adjacent metallic structures such as other transmission lines, railroads, pipelines, fences, or structures that are parallel to, or cross the transmission line(s). Induced currents on these facilities occur to some degree during steady-state operating conditions and during a fault condition on the transmission line(s). For example, during a lighting strike on the line(s), the insulators may flash over, causing a fault condition on the line(s); current will flow down the structure through the grounding system (i.e., ground rod or counterpoise) and into the ground. The magnitude of the effects of the AC-induced currents on adjacent facilities is highly dependent on the magnitude of the current flows in the transmission line(s), the proximity of the adjacent facility to the line(s), and the distance (length) for which the facilities and the line(s) parallel one another in proximity.

The methods and equipment needed to mitigate these conditions will be determined through electrical studies of the specific situation prior to initiation of construction activities. As standard practice and as part of the design of the Project, electrical equipment and fencing at the substation will be grounded.

If applicable, grounding of metallic objects outside of the right-of-way also may be implemented, depending on the distance from the transmission line, as determined through the electrical studies. These actions take care of the majority of induced current effects on metallic facilities adjacent to the line by shunting the induced currents to the ground through ground rods, ground mats, and other grounding systems, thus reducing the step and touch potential a person may experience when touching a metallic object near the line (i.e., reduce electric shock potential)

In the case of a longer parallel facility, such as a pipeline parallel to the Project over many miles, additional electrical studies may be undertaken by the Proponent to identify any additional mitigation measures that will need to be implemented to prevent damaging currents from flowing onto the parallel facility and to prevent electrical shock to any people who may come in contact with the parallel facility. Some of the typical mitigation measures that could be considered for implementation, depending on the degree of mitigation needed, can include the following (National Association of Corrosion Engineers [NACE] International 2003):

- **Fault Shields**. Shallow grounding conductors connected to the affected structure adjacent to overhead electrical transmission towers, poles, substations, etc. They are intended to provide localized protection to the structure and pipeline coating during a fault event from a nearby electric transmission power system.
- **Lumped Grounding**. Localized conductor or conductors connected to the affected structure at strategic locations (e.g., at discontinuities). They are intended to protect the structure from both steady-state and fault AC conditions.
- **Gradient Control Wires**. A continuous and long grounding conductor or conductors installed horizontally and parallel to a structure (e.g., pipeline section) at strategic lengths and connected at regular intervals. These are intended to provide protection to the

structure and pipeline coating during steady-state and fault AC conditions from nearby electric transmission power systems.

- **Gradient Control Mats**. Typically used for aboveground components of a pipeline system, these are buried ground mats bonded to the structure, and are used to reduce electrical step and touch voltages in areas where people may come in contact with a structure and be subject to hazardous potentials.

Permanent mats bonded to the structure may be used at valves, metallic vents, cathodic protection test stations, and other aboveground metallic and nonmetallic appurtenances where electrical contact with the affected structure is possible. In these cases there is no standard solution that will solve these issues every time. Instead, each case must be studied to determine the magnitude of the induced currents and the most appropriate mitigation given the ground resistivity, distance paralleled, steady-state and fault currents, fault clearing times expected on the transmission line, and distance between the line and paralleling facilities, to name a few of the parameters. In the instance that the electrical studies indicate a need to install cathodic protection devices on a parallel facility, a distribution supply line interconnection may be needed to provide power to the cathodic protection equipment.

During final design of the transmission line segments, appropriate electrical studies will be conducted by the Proponent to identify the issues associated with paralleling other facilities and the types of equipment that will need to be installed (if any) to mitigate the effects of the induced currents.

3.3 LAND REQUIREMENTS AND PROJECT DISTURBANCE

This section describes the permanent and temporary right-of-way and disturbance types anticipated for the Project. As further details of the final Project design are engineered, the amount of land required or disturbed may change. All details of final Project design will be documented in the Final POD.

3.3.1 Right-of-Way Acquisition

New permanent and temporary land rights are required for the transmission line facilities, such as the transmission line corridor, access roads, and temporary work sites (e.g., right-of-way grant, easements, license agreement, and fee simple). The Proponent has requested permanent right-of-way for a width of up to 1,000 feet for the transmission lines; however, the right-of-way width would typically be approximately 400 feet, in order to accommodate a separation of 200 feet between the two transmission lines. The right-of-way width must be sufficient to accommodate “conductor blowout” (the swinging of the conductor midway between structures) due to wind, as well as maintenance clearances at the structure sites. The right-of-way will be used for construction, operation, and maintenance of the Project. In addition, temporary permission from landowners or land-management agencies will be required during construction for off-right-of-way access, staging areas, construction years, and material storage.

Additional temporary right-of-way may be required in areas where the proposed transmission lines turn at a sharp angle. These locations will require wire pulling and tensioning activity

during the construction phase of the Project, and typically require up to 600 feet of temporary right-of-way to accommodate wire pulling and tensioning equipment. In some areas, a narrower right-of-way may be required due to certain site conditions or constraints. In these locations, the right-of-way would be a minimum of 330 feet. Access roads may be located outside of the transmission line right-of-way where required, due to steep terrain or other restrictive site conditions (i.e., sensitive environmental resources that should be avoided). Access roads will be identified and depicted in the Final POD and approved by the BLM prior to construction. Areas that are used temporarily (e.g., roads, staging areas, batch plants, etc.) may require temporary use permits.

3.3.2 Project Disturbance

Areas of temporary and permanent disturbance for the construction areas will be calculated using geographic information systems (GIS) per specifications presented in Table 3-3. Table 3-4 shows the total disturbance acreages across administrative jurisdictions, and a detailed breakdown of those disturbance amounts is presented in Table 3-5.

Table 3-4. Total Disturbance Acreages across Administrative Jurisdictions for the SunZia Project [To Be Provided Upon Selection Of Final Route]

Jurisdiction	Disturbance Acres for Temporary Use	Disturbance Acres for Permanent Use	Total Disturbance Acres
BLM			
Private			
5% contingency for project variations			
TOTAL			
Note: Table 3-5 provides more detailed information on temporary and permanent disturbance areas			

Table 3-5. Disturbance Breakdown for the SunZia Project [To Be Determined Upon Selection of Project Alternative]

Facility	Disturbance (Acres) within Right-of-way		Disturbance (Acres) outside Right-of-way	
	Temporary	Permanent	Temporary	Permanent
Access [1]				
Improve Existing				
Overland				
Bladed (new access) [2]				
Transmission Structures 3				
Guyed-V Towers (Tubular or Lattice)				
Self-Supporting Lattice				
Self-Supporting Tubular				
Dead-end Lattice				
Dead-end Tubular				
Dead-end Tubular, 3-pole				
Transposition				
Arrestor				
Other Facilities				
Concrete Batch Plants/Construction Laydown Areas				
Wire Pulling and Tensioning Sites				
Wire Splicing Sites				
Guard Structures [4]				
Fiber Optic Regeneration Station Sites				
Totals				
Totals				
5% contingency for project variations				
Grand Total[5]				

Notes:
[1] The area of disturbance for access may change as the BLM will identify, with the Project Proponent, those new access roads to be closed, restored, or maintained as permanent access prior to initiation of construction.
[2] In select areas additional cut and fill (switchback turns) or side hill cuts (steep grade) may be required, potentially resulting in additional acres of permanent disturbance.
[3] Temporary work areas are calculated at 200 feet x 200 feet for all structure sites; however, permanent structure disturbance is calculated based on foundation areas.
[4] It has been assumed that guard structures will be located at XX major road crossings (i.e., I-10, U.S. Highway XX, State Highway XX). Prior to construction these specific locations will be verified.
[5] Grand Total does not include area of permanent disturbance for transmission structures as it is included in the temporary use area of 200 feet x 200 feet.

A typical temporary disturbance area of 200 feet by 200 feet has been assumed for each structure work area. The actual dimensions of the temporary area of disturbance may vary, depending on factors such as terrain and vegetation. Variations in the area of disturbance will be monitored and documented by the CIC during Project construction (see Appendix A9 – Environmental Compliance Management Plan).

A permanent work area at the base of each structure is required for long-term maintenance activities. While revegetation could occur in this work area, minimal contouring will be performed and some land uses may be restricted. See Table 3-5 for the dimensions of this permanent work area for each structure type.

Temporary and permanent work areas will be delineated by the construction contractor(s) in coordination with the CIC prior to construction, and the CIC will track the actual Project disturbance acreage. If either the amount of permanent or temporary actual disturbance exceeds the acreage presented above, consultation with the BLM and other agencies will be required.

3.4 EXISTING RIGHT-OF-WAY AND LINE CROSSINGS

The Project will require the crossing of various electrical distribution and transmission lines along the alignment (Table 3-6). In all cases, the SunZia 500 kV line will cross over the top of these existing facilities. In addition, the proposed line will cross US and State Highways (e.g., I-10, US XX, State Highway XX) in certain locations.

Applications for licenses or rights-of-way to permit these crossings will be submitted to appropriate agencies or entities for approval prior to initiating construction. In these areas, safety precautions will be taken to ensure that there are no conflicts with continued use of these existing facilities, and guard structures will be erected as outlined in Appendix A1 – Construction Plan and Program.

Table 3-6. SunZia Right-of-Way and Line Crossings
[To Be Provided Upon Selection Of Final Route]

Right-of-Way/Line Crossing	Crossing Location (Nearest Tower)	Total Crossings
Totals		

This page intentionally left blank.

SECTION 4 – PROJECT CONSTRUCTION

This section discusses the construction of the proposed Project. Topics include a brief overview of the construction activities, the construction workforce, environmental and safety training, and the process that will be followed to address any variances or deviations that may be required during construction.

4.1 CONSTRUCTION ACTIVITIES

Construction of the transmission line(s) will include the following sequence of activities:

- surveying and staking the transmission centerline, other project features, and work areas
- upgrading or constructing temporary and permanent access roads
- clearing and grading activities for the right-of-way, tower sites, staging areas, and batch plants
- excavating and installing foundations
- assembling and erecting structures with temporary and permanent work areas
- conventional method of assembly and erection
- helicopter method of assembly and erection
- stringing conductors and shield wires
- installing counterpoise (tower grounds), where needed
- clean-up and reclamation of affected areas

These activities are described in detail in Appendix A1 – Construction Plan and Program, which includes information regarding other preconstruction and construction components such as:

- preconstruction resource surveys and aerial photography
- right-of-way preparation
- additional preconstruction activities
- construction storage yards and concrete batch plants
- equipment staging areas
- equipment refueling areas
- helicopter use and refueling

Additionally, Appendix A – Construction Considerations includes detailed information related to the construction of the Project, such as:

- flagging, fencing, and signage
- transportation management
- fire protection
- blasting
- erosion/dust control and air quality
- hazardous materials management
- emergency preparedness and response
- environmental compliance management

4.2 CONSTRUCTION WORKFORCE

The estimated number of workers and types of equipment required to construct the proposed transmission line is shown in Table 4-1. Various phases of construction will occur at different locations throughout the construction process, and in some cases at the same time at different locations. Regular field meetings will be held with the CIC and environmental monitors, to coordinate construction activities with monitoring requirements for the transmission line and ancillary facilities.

Table 4-1. SunZia 500 kV Transmission Line Construction Estimated Personnel and Equipment[1]

Activity	People	Quantity and Type of Equipment	
Survey Crew	4	2	pickup trucks
Road Construction Crew	4-10	1	bulldozer (D-8 Cat or equivalent)
		2	motor graders
		2	pickup trucks
		2	Excavator and Compactor
		3	water trucks (for construction and maintenance)
Footing Installation Crew	28	6	hole diggers
		2	bulldozers
		3	flatbed trucks
		6	concrete trucks
		2	dump trucks
		6	pickup trucks
		1	carry all
		2	hydraulic cranes
		1	wagon drill
Structure Steel Haul Crew	6	4	steel haul trucks
		2	pickup trucks
		3	yard and field cranes
		3	fork lifts
Structure Assembly 4-6 Crews	40	4	pickup trucks
		6	carry alls
		4	cranes
		3	trucks (2 ton)
Structure Erection 1-2 Crews	14	2	cranes (120 – 300 ton)
		1	2-ton truck
		2	pickup trucks
		2	carry alls
Wire Installation Crew	36	6	wire reel trailers
		6	diesel tractors
		4	cranes (2) 20 ton, (2) 30 ton
		4	trucks (5 ton)
		4	pickup trucks

Table 4-1. SunZia 500 kV Transmission Line Construction Estimated Personnel and Equipment[1]			
Activity	**People**	**Quantity and Type of Equipment**	
		2	splicing trucks
		4	3-drum pullers (2 medium, 2 heavy)
		1	single drum puller (large)
		2	double bull-wheel tensioner (1 light and 1 heavy)
		2	sagging equipment (D-8 Cat)
		6	carry alls
		2	static wire reel trailers
Clean-up Crew	4	3	dump trucks/material trucks
		1	pickup trucks
		2	Motor Graders
		2	Water trucks
		1	D-6 Cat
Road Rehabilitation Crew (Right-of-Way Restoration)	4	1	bulldozer
		1	motor grader
		2	Tractors
		2	Water trucks
		2	pickup trucks
Estimated maximum personnel required for all tasks including maintenance, management, and quality control personnel = 150			
[1]Estimates are representative of personnel required for construction of each transmission line.			

4.3 ENVIRONMENTAL AND SAFETY TRAINING

Prior to gaining access to the right-of-way, all construction and maintenance workers will be required to participate in an environmental education program. This program will be developed by the Proponent prior to the start of construction and will be submitted to the BLM for review and approval prior to implementation. At a minimum, the program will include the following topics: biological, cultural, paleontological, and other environmental requirements and protection measures.

After participating in the training program each trained worker will receive a card and hardhat sticker, indicating they are cleared for access to the right-of-way. The construction contractor(s) will provide the CIC with an updated list of those workers who have received the training. It is the responsibility of the construction contractor(s) to ensure that all construction personnel have received the required training. A non-compliance violation will be issued if a worker is found working on the right-of-way without the required environmental training.

In addition, the construction contractor(s) will be responsible for providing safety training as required. Specific health and safety information for this POD is contained within **Appendix A – Construction Considerations**, including a description of the safety requirements specifically associated with construction activities (construction of access roads, blasting, fire protection, etc.) All construction, operation, and maintenance activities will be required to comply with Occupational Safety and Health Administration regulations. The CIC will be notified by the

construction contractor(s) of any accidents that occur on public land during construction of the Project. Notification procedures for emergencies are described in Appendix A8 – Emergency Preparedness and Response Plan Guidelines.

4.4 DEVIATIONS DURING CONSTRUCTION

Changes or deviations (referred to as variances) are likely to be needed for the Project in order to accommodate or mitigate on-site circumstances. It is understood by the BLM and the Proponent that unforeseen circumstances will occur during construction. The need for realignments to the proposed route, access roads, and/or work areas that are not within the permitted Project right-of-way grant and EIS analysis may arise. In addition, the need to make changes to construction procedures, schedule, and/or approved mitigation measures and other specific stipulations and methods may be required. Under these or similar circumstances, a variance will need to be filed and approved by the BLM in order to stay in compliance. A detailed discussion of Project variances and the process in which they are evaluated and approved or denied is provided in Appendix A9 – Environmental Compliance Management Plan.

4.5 PROJECT CONSTRUCTION CLOSEOUT

Upon completion of construction activities for the Project (including initial restoration activities as described in Appendix F – Right-of-Way Preparation, Reclamation, and Monitoring Framework Plan of the Final POD), the Proponent and the construction contractor(s) will coordinate with the CIC(s) and BLM Authorized Officer and resource staff to conduct final on-the-ground inspections of Project conditions. Inspections will be conducted to ensure work was completed in accordance with the terms and conditions of the right-of-way grant, ROD, POD, and any other applicable permits. When the BLM Authorized Officer determines that construction (including initial restoration activities) has been completed in compliance with the right-of-way grant, ROD, POD, and any other applicable permits, the CIC(s), construction contractor(s), and Project Proponent's construction roles will be considered complete. This determination will initiate the post-construction monitoring phase for restoration success (as described in Appendix F of the Final POD), for which the Proponent will remain responsible.

After the BLM's determination of successful construction completion, the CIC will submit a final summary report to the BLM Authorized Officer documenting the construction process and activities including, but not limited to, the following items:

- amount of actual temporary and permanent project disturbance (acres) as compared with the POD
- compilation of all weekly summary compliance reports (including digital pictures)
- variance requests and corresponding CIC/BLM decisions
- temporary work suspensions and work stoppage orders for violation of environmental compliance terms, and documentation of resolution

Appendix A9 – Environmental Compliance Management Plan of the Draft and Final POD describes the Project closeout process, including the final summary report and construction closeout meetings, in greater detail.

SECTION 5 – OPERATION AND MAINTENANCE OF PROJECT

Section 5 provides information that describes on-going and long-term activities to occur along the right-of-way. This section includes a discussion on compatible uses, right-of-way safety requirements, inspection and maintenance, long-term access, signage, and contingency planning.

5.1 INTRODUCTION

The NESC (ANSI C2), which governs the design and operation of high-voltage electric utility systems, obligates the Proponent to maintain reliable operation of the electrical system. The design, operation, and maintenance of the Project will meet or exceed applicable criteria and requirements outlined by the NESC, Federal Energy Regulatory Commission (FERC), Western Electric Coordinating Council (WECC), and U.S. Department of Labor Occupational Safety and Health Standards for the safety and protection of landowners, their property, and the general public.

In 2005, Congress passed the Energy Policy Act of 2005, which provided a regulatory basis for the implementation of specific incentives (and penalties) for maintaining reliable service, among other issues. As a result of the passage of the Energy Policy Act of 2005, the FERC selected the North American Electric Reliability Council (NERC) to act as the enforcement agency for compliance with electric utility reliability and operating standards, among other issues. The Proponent is required to be in compliance with the various reliability standards promulgated through the implementation of NERC policies and procedures. Additionally, the Proponent is governed by the WECC standards that may be in addition to or more stringent than those currently required by the NERC.

5.2 COMPATIBLE USES

After construction, compatible uses in the right-of-way on public land will be considered and approved (if necessary) by the BLM in consultation with the Proponent. Examples of compatible uses within the right-of-way include grazing, vehicle and pedestrian access, recreational use, low-growing vegetation, and pre-existing compatible uses. Examples of uses generally not compatible with high-voltage transmission lines include buildings or closed structures frequented by humans (such as residences), and any use that requires changes in surface elevation that affect electrical clearances of existing or planned facilities. Compatible uses of the right-of-way on public lands will have to be approved by the appropriate agency. Compatible uses within easements on private land crossed by the transmission line will be similar to those on the public land and subject to the discretion of the Proponent.

5.3 RIGHT-OF-WAY SAFETY REQUIREMENTS

The Proponent will limit the height of vegetation along the right-of-way according to minimum conductor clearances required for the Project (refer to Section 5.4.2, Vegetation Management). Where vegetation presents a potential hazard, trees will be trimmed or cut to prevent accidental grounding contact with conductors. The transmission line will be protected with power circuit breakers and line relay protection equipment. If a conductor failure occurs, power will be

automatically removed from the line. Lightning protection will be provided by shield wires and OPGW on top of the structures.

5.3.1 Building and Fence Grounding

In order to mitigate possible electric shock caused by electrostatic and electromagnetic induction, all buildings, fences, center pivot irrigation systems, and other structures with metal surfaces located within 150 feet of the centerline of the right-of-way will be grounded to the mutual satisfaction of the parties involved. Typically, residential buildings located more than 150 feet from the centerline will not require grounding. Other buildings or structures beyond 150 feet from the centerline will be reviewed in accordance with the NESC to determine grounding requirements. All metal irrigation systems and fences that parallel the transmission line for distances of 500 feet or more, within 150 feet of the centerline, will be grounded (none identified at this time). All fences that cross under the transmission line will also need to be grounded. This procedure will be included in the construction specifications and if grounding is required outside the right-of-way, temporary-use permits or landowner consent will be obtained, as necessary.

5.4 PROJECT INSPECTIONS AND MAINTENANCE

Regular inspection of transmission lines, substations, and support systems is critical for the safe, efficient, and economical operation of the Project. This section provides information describing operation and maintenance activities that include transmission line patrols, annual inspections, tower and wire maintenance, and repairs of access roads.

5.4.1 Transmission Line Maintenance

The transmission lines will be inspected annually or as required, by using fixed-wing aircraft, helicopters, ground vehicles, all-terrain vehicles, or on foot. The transmission lines and substations will be inspected for corrosion, equipment misalignment, loose fittings, vandalism, and other mechanical problems. The need for vegetation management will also be determined during inspection patrols.

Maintenance will be performed as needed, and the comfort and safety of land users and local residents will be provided for by limiting noise, dust, and the danger caused by maintenance vehicle traffic. Where access is required for non-emergency maintenance and repairs, the same precautions against ground disturbance that were taken during the original construction will be followed, and restrictions and mitigation measures applicable during initial construction will be followed in areas of critical biological concern (see Appendix B1 – Biological Resources Protection Plan). Any berms or boulders that were in place also will be restored, after completion of the maintenance work.

In the event of an emergency, crews will be dispatched quickly to repair or replace any damaged equipment. Every attempt will be made to contact the appropriate agencies or landowners along the right-of-way. In the event notification cannot be made, repair operations will proceed only in the case of an emergency situation. Repair of the line will have priority under emergency conditions, and reasonable efforts will be made to protect plants, wildlife, and other resources.

Restoration and reclamation procedures following completion of repair work will be similar to those prescribed during construction. Refer to Appendix F – Right-of-Way Preparation, Reclamation, and Monitoring Framework Plan, for a more detailed description of the guidelines and regulations that must be followed.

Damage repair may require the same types of equipment used during construction, including power augers for hole boring, backhoes for excavation, and/or concrete trucks and cranes for structure erection. Other required equipment may include power tensioners, pullers, wire trailers, crawler tractors, and trucks and pickups for hauling materials, tools, and men. Under certain conditions, a helicopter could be used to haul in material and erect structures or string conductor in those areas where access and/or terrain conditions preclude the use of conventional methods. Any necessary temporary staging areas outside of the right-of-way would require authorization from the applicable landowner(s). Site and access road disturbances such as ruts created during damage operations will be restored to satisfactory condition using rehabilitation procedures.

If during transmission line maintenance and monitoring it is determined that new or reconstruction activities should be implemented, the Project Proponent will notify the BLM, property owners, and/or other regulatory agencies, and obtain proper approvals, as necessary.

Dust control, during maintenance of the transmission line, will be managed the same as during construction. Refer to dust control measures located in Appendix A6 – Erosion, Dust Control, and Air Quality Plan.

5.4.2 Vegetation Management

Maintenance crews will trim trees and vegetation, where necessary, to prevent accidental grounding contact with conductors. In most areas, accepted standard utility practices such as repeated tree trimming and brush removal will be followed to maintain the right-of-way. Generally, trees more than 15 feet in height and within 100 feet of the transmission centerline may need to be selectively removed or trimmed to provide the required electrical line clearance. The Project Proponent will comply with agency requirements regarding management of noxious weeds within the right-of-way, along access roads, and at temporary use areas (e.g., cleaning equipment to prevent spread of noxious weeds). Chemical treatment within or adjacent to the right-of-way generally will be limited only to areas with noxious weeds, and only if absolutely necessary and in accordance with the Noxious Weed Management Plan (see Appendix B2 – Noxious Weed Management Plan). Should the use of herbicides or pesticides be necessary, only U.S. Department of Agriculture-recommended and Environmental Protection Agency-approved products will be used, and only upon prior approval of the BLM Authorized Officer or owner.

5.4.3 Substation Maintenance

The 500 kV substation yards and all equipment will be patrolled and monitored by maintenance personnel on a routine basis. If a large volume of a contaminate were to leak from a piece of electrical equipment, an alarm or a failure will occur notifying the operations center of the problem, and a trained maintenance crew will be dispatched to the substation immediately to begin repairs and cleanup.

5.5 LONG-TERM ACCESS TO AND ALONG THE RIGHT-OF-WAY

Authorized access roads will only be used for maintenance purposes upon completion of construction. Where long-term access is required for maintenance and operation, the Proponent shall maintain the right-of-way in a safe, useable condition. A regular maintenance program may include, but is not limited to, blading, ditching, culvert installation, and surfacing.

If snow removal is necessary, equipment used shall be equipped with shoes to keep the blade 2 inches off the road surface in order to avoid damage to the right-of-way. Where the ground is uneven at drainage crossings, special precautions will be taken in order to ensure equipment blades do not destroy vegetation.

5.6 SIGNAGE AND MARKERS

At this time, no specific locations have been identified for aerial line markers; however, bird flight diverters will be placed on the shield wire/fiber optic cable as specified in Appendix B1 – Biological Resources Protection Plan. Warning signs will be placed on structures and at substations, marking high-voltage danger areas per industry standards.

5.7 RADIO OR TELEVISION INTERFERENCE

The Proponent will respond to complaints of radio or television interference generated by the transmission line by investigating complaints and implementing appropriate mitigation measures, if necessary. The transmission line will be patrolled on a regular basis so that damaged insulators or other components, which could cause interference, are repaired or replaced.

5.8 CONTINGENCY PLANNING

A representative will be selected by the Proponent to provide routine and emergency planning for situations such as power outages, equipment upgrades, and fire control. The designated representative will have the authority to receive and carry out instructions from the BLM.

5.9 EMERGENCY PROCEDURES

Emergency response procedures will be implemented for the following potential events, or similar events:

- downed transmission lines, structures, or equipment failure
- fires
- sudden loss of power
- natural disasters
- serious personal injury

5.10 TERMINATION AND RESTORATION

The term of the BLM right-of-way grant to allow use of federal lands would be limited to 50 years, although the useful life of the Project facilities is projected to be at least 50 years and up to 75 years. Should the right-of-way and facilities no longer be needed, the transmission lines and associated facilities would be decommissioned. Subsequently, conductors, insulators, concrete pads, and hardware would be dismantled and removed from the right-of-way. Transmission structures would be removed and foundations broken off at least 2 feet below ground surface. All areas of permanent disturbance would be restored in accordance with a Termination and Reclamation Plan to be developed by the right-of-way grant holder. One year prior to termination of the right-of-way, the holder shall contact the appointed BLM authorized officer to arrange a joint inspection of the right-of-way. This inspection will be held in order to agree to an acceptable termination and rehabilitation plan. The BLM authorized officer must approve the plan in writing prior to commencement of any termination activities. The termination and restoration plan will be reviewed and approved by the BLM Authorized Officer and will include the following information:

- what facilities and access routes are to be removed, restored, and/or rehabilitated
- how facilities and access routes will be removed, and the disturbed areas restored
- the time of year the facilities and access routes will be removed
- stabilization and reclamation techniques to be used during restoration

This page intentionally left blank.

SECTION 6 – MITIGATION OF ENVIRONMENTAL CONCERNS

This section of the POD provides an overview of key environmental concerns associated with the construction, operation, and maintenance of the Project, and presents mitigation measures to address those concerns. Included in this discussion are the standard and selective measures for the Project, and a description of key resource concerns and mitigation measures to address these concerns.

6.1 OVERVIEW OF ENVIRONMENTAL CONCERNS AND MITIGATION

In order to meet agency management objectives and best management practices, two types of mitigation measures have been developed for the Project EIS process that will be included as conditions in the ROD and right-of-way grant. These include standard mitigation and selectively committed mitigation measures, as described below.

Standard mitigation measures are those that apply to the Project as a whole, and to some extent serve as part of the overall Project description. These measures typically address specific environmental policies and regulatory requirements. Where warranted, on a case-by-case basis, mitigation beyond these standard measures has been recommended to reduce potential impacts, often in specific impact locations; these are called selective mitigation measures. Table 6-1 and Table 6-2 provide a list of standard and selective mitigation measures identified to reduce impacts to environmental resources. These measures have been generally categorized, as they apply to three specific phases of the Project, including (1) Project Engineering and Design, (2) Project Construction, and (3) Maintenance and Operation of Facilities.

Some of the mitigation measures are applicable to the engineering and design phase of the Project (e.g., locating structures to avoid sensitive features, selection of alternative structure types in selective locations, etc.). The construction contractor(s) will adhere to those measures identified during the engineering/design phase, as well as those measures identified herein to address construction and reclamation activities. The CIC will be responsible for the oversight of the implementation of these measures.

Key selective mitigation measures will also be presented in conjunction with the mapped location of Project facilities in Map Set 2 of the Final POD.

In addition to the information presented in Tables 6-1 and 6-2, other specific stipulations and methods will be incorporated into the Final POD as additional resource-specific protection measures that supplement the standard and selective mitigation measures as part of the Project description by the Proponent. The objective of the other specific stipulations and methods is to provide for Project-specific environmental protection as follows:

- Provide consistency across jurisdictions to the extent practical
- Comply with current BLM management guidance for federal lands
- Balance cost and practicality by avoiding or minimizing environmental impacts

Table 6-1. Standard Mitigation Measures				
Standard mitigation measures are part of the Project description; they are applied to all alternatives considered in the impact assessment.				
	Mitigation Measure	**Mitigation Application Phase**		
		Engineering, Design, and Location	**Construction**	**Operations**
1	Prior to construction, a detailed POD will be developed to further describe Project features, selective mitigation, and procedures. At a minimum, the POD will address project design, construction and operation considerations, biological considerations (including noxious weed management), archaeological considerations, paleontological considerations, hazardous materials management, and reclamation considerations.	●	●	●
2	All vehicle movement outside the right-of-way would typically be restricted to designated access, contractor acquired access, or public roads.		●	●
3	The boundary of construction activities would typically be predetermined, with activity restricted to and confined within those limits. No paint or permanent discoloring agents would be applied to rocks or vegetation to indicate survey or construction activity limits.		●	
4	The alignment of any new access roads or overland route would follow the designated area's landform contours where possible, provided that such alignment does not additionally impact resource values. This would minimize ground disturbance and/or reduce scarring (visual contrast).	●	●	
5	In construction areas where grading is not required, vegetation would be left in place wherever possible, and original contour would be maintained to avoid excessive root damage and allow for regrowth. All existing roads would be left in a condition equal to or better than their condition prior to the construction of the transmission lines, as determined by the appropriate land-managing agency.	●	●	
6	To limit new disturbance, existing access roads in the Project area would be used to the extent practicable, provided that doing so does not additionally impact resource values.	●	●	●
7	Construction holes left open overnight would be appropriately fenced or covered to prevent damage to wildlife or livestock.		●	

Table 6-1. Standard Mitigation Measures				
Standard mitigation measures are part of the Project description; they are applied to all alternatives considered in the impact assessment.				
	Mitigation Measure	**Mitigation Application Phase**		
		Engineering, Design, and Location	**Construction**	**Operations**
8	In construction areas (e.g., marshalling yards, structure sites, spur roads from existing access roads) where grading is required, surface restoration would be implemented as required by the landowner or BLM Authorized Officer. The method of restoration would normally consist of returning disturbed areas back to their natural contour, reseeding (where required), cross drains installed for erosion control, placing water bars in the road, and filling ditches.		●	
9	Watering facilities (e.g., tanks, developed springs, water lines, wells, etc.) would be repaired or replaced if they are damaged or destroyed by construction activities to their predisturbed condition, as required by the landowner or land management agency. Temporary watering facilities would be provided for wildlife and livestock until permanent repair or replacement is complete.		●	
10	Nonspecular conductors would be used, where specified by the BLM Authorized Officer, to reduce visual impacts.	●	●	
11	"Dulled" metal or self-weathering finish structures would be used to reduce visual impacts, if specified by the BLM Authorized Officer.	●	●	
12	Structures and/or groundwire would be marked with high-visibility devices where required by government agencies (e.g., FAA).	●	●	●
13	On agricultural land, right-of-way would be aligned, in so far as practicable, to reduce the impact to farm operations and agricultural production.	●		
14	Prior to construction, all supervisory construction personnel would be instructed on the protection of cultural and ecological resources. To assist in this effort, the construction CIC or a resource specialist would address: (a) federal and state laws regarding antiquities and plants and wildlife, including collection and removal; (b) the importance of these resources and the purpose and necessity of protecting them.	●	●	

Table 6-1. Standard Mitigation Measures				
Standard mitigation measures are part of the Project description; they are applied to all alternatives considered in the impact assessment.				
	Mitigation Measure	**Mitigation Application Phase**		
		Engineering, Design, and Location	**Construction**	**Operations**
15	Cultural resources would continue to be considered during post-EIS phases of Project implementation, in accordance with an executed agreement. This would involve intensive surveys to inventory and evaluate cultural resources within the selected corridor and any appurtenant impact zones beyond the corridor, such as access roads and construction equipment yards. This would also require completion and approval of a cultural inventory report, approval of an HPTP, and implementation of the HPTP to ensure proper data recovery and recordation prior to construction in the sensitive areas identified in the HPTP. Monitoring of construction activities would be required to ensure that cultural sites that are to be avoided during construction remain undisturbed.	●	●	
16	Project Owners would respond to complaints of line-generated radio or television interference by investigating the complaints and implementing appropriate mitigation measures. The transmission line would be evaluated on a regular basis so that damaged insulators or other line materials that could cause interference are repaired or replaced.			●
17	Project Owners would apply necessary mitigation to eliminate problems of induced currents and voltages onto conductive objects sharing right-of-way, to the mutual satisfaction of the parties involved.		●	●
18	Roads would be built as near as possible at right angles to the streams and washes. Culverts or temporary bridges would be installed where necessary. All construction and operations activities shall be conducted in a manner that would minimize disturbance to vegetation, drainage channels, and intermittent or perennial stream banks.		●	●
19	To the extent practicable, structures would be sited with a minimum distance of 200 feet from streams.	●		

Table 6-1. Standard Mitigation Measures				
Standard mitigation measures are part of the Project description; they are applied to all alternatives considered in the impact assessment.				
	Mitigation Measure	**Mitigation Application Phase**		
		Engineering, Design, and Location	**Construction**	**Operations**
20	All requirements of those entities having jurisdiction over air quality matters would be adhered to, any necessary dust control plans would be developed, and permits for construction activities would be obtained. Open burning of construction trash would not be allowed unless permitted by appropriate authorities.		●	
21	Fences and gates would be repaired or replaced to their original, predisturbed condition, as required by the landowner or the BLM Authorized Officer if they are damaged or destroyed by construction activities. New temporary and/or permanent gates would be installed only with the permission of the landowner or the BLM. Temporary gates not required for postconstruction access control (see SE 6) would be removed following construction completion, and the area restored in accordance with the POD (see ST 1).		●	
22	Transmission line materials would be designed and tested to minimize corona. Bundle configuration and larger diameter conductors would be used to limit the audible noise, radio interference, and television interference due to corona. Tension would be maintained on all insulator assemblies to ensure positive contact between insulators, avoiding sparking. Caution would be exercised during construction and operations to avoid scratching or nicking the conductor surface, which may provide points for corona to occur.	●	●	●
23	During operation of the transmission lines, the right-of-way would be maintained free of nonbiodegradable debris. Slash would be left in place or disposed of in accordance with requirements of the land owner or management agency.		●	●

Table 6-1. Standard Mitigation Measures				
Standard mitigation measures are part of the Project description; they are applied to all alternatives considered in the impact assessment.				
	Mitigation Measure	**Mitigation Application Phase**		
		Engineering, Design, and Location	**Construction**	**Operations**
24	In consultation with appropriate land-management agencies, specific mitigation measures for paleontological resources would be developed and implemented to mitigate any identified adverse impacts. These measures would include: preparation of a PRMP; paleontological surveys; personnel education; monitoring ground disturbance for fossils; curation of fossils; and deposition of fossils in a paleontological repository.	●	●	
25	Preconstruction surveys for species listed under the ESA or specified by the appropriate land management agency as sensitive or of concern would be conducted in areas of known occurrence or suitable habitat. Timing of the surveys would be determined by the construction schedule. Monitoring of construction activities would be required in some areas to ensure that effects to these species are avoided during construction. If Bald Eagle or Golden Eagle nests are identified during preconstruction surveys, seasonal restrictions on construction within a specified buffer would be implemented where applicable, according to current USFWS protocols, to comply with the BGEPA. Preconstruction nesting-season surveys for migratory birds, and surveys for Burrowing Owls in suitable habitat, would be conducted as needed to comply with the MBTA.	●	●	●
26	Preconstruction native plant inventories and surveys for noxious weed species as stipulated by the appropriate land-administering agency would also be conducted once transmission line centerline, access roads, and tower sites have been located.	●		
27	Surveys for bat roosts would be conducted within ¼ mile of the Project right-of-way in areas that potentially contain caves, karst features, or mines. Occupied bat roosts would be avoided.	●	●	

Table 6-1. Standard Mitigation Measures				
Standard mitigation measures are part of the Project description; they are applied to all alternatives considered in the impact assessment.				
		Mitigation Application Phase		
	Mitigation Measure	**Engineering, Design, and Location**	**Construction**	**Operations**
28	Paniculate agave plants (*Agave palmeri*, *A. parryi*, and *A. chrysantha*) and saguaro cacti (*Carnegiea gigantea*) within the known range of the Lesser Long-nosed Bat or Cactus Ferruginous Pygmy-owl would be avoided or salvaged for replanting within the right-of-way or suitable adjacent habitat. Only agaves not possessing flower stalks would be salvaged, and only saguaros of transplantable size (15 feet or less in height) would be salvaged.	●	●	
29	Electrical facility design would be in accordance with "Suggested Practices for Raptor Protection on Power Lines" (Avian Power Line Interaction Committee 2006).	●		
BGEPA – Bald and Golden Eagle Protection Act HPTP – Historic Properties Treatment Plan PRMP – Paleontological Resources Monitoring Plan				

Table 6-2. SunZia Selective Mitigation Measures

Mitigation Measure	Mitigation Examples	Mitigation Application Phase			Mitigation Effectiveness								
					Water Resources		Earth Resources		Biological Resources				
		Engineering, Design, and Location	Construction	Operations	Streams/ Washes	Wetlands/ Springs	Geology/ Soils	Paleontology	Sensitive Wildlife Species	Sensitive Plant Species	Land Use	Visual Resources	Cultural Resources
1. No widening or upgrading of existing access roads would be undertaken in the area of construction and operations, except for repairs necessary to make roads passable, where soils and vegetation are very sensitive to disturbance, or where existing archaeological sites are present.	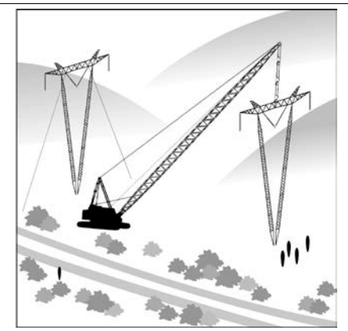	●	●	●	●	●	●			●	●	●	●
					Avoiding unnecessary access road upgrades would limit the amount of habitat disturbed or removed. In addition, the avoidance of road upgrades would minimize increases to vehicular traffic, thereby reducing the potential for indirect effects such as damage or loss of vegetation, spread of noxious weeds, harassment of wildlife, vandalism of cultural resources, and disturbance to sensitive land uses (e.g., parks, preservation, and recreation areas).								
2. There would be no blading of new access roads in select areas of construction and operations. Existing crossings would be utilized at perennial streams, designated recreational trails, and irrigation channels. Off-road or cross-country access routes would be used for construction and maintenance in select areas. This would minimize ground disturbance impacts. These access routes must be flagged with an easily seen marker, and the route must be approved in advance of use by the BLM Authorized Officer or landowner.	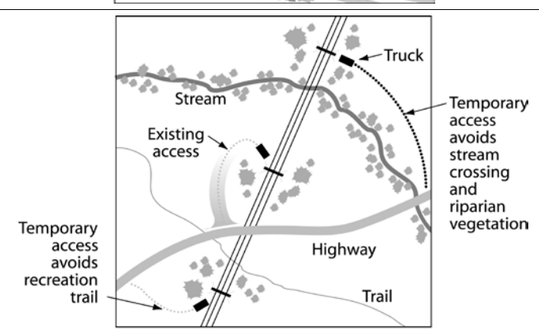	●	●		●	●	●		●	●	●	●	●
					Selective Mitigation Measure 2 is effective for the same reasons as Selective Mitigation Measure 1. Minimizing ground-disturbing construction activities in the same vicinity as streams would limit disturbance to riparian areas and/or streambeds, thereby avoiding turbidity and sedimentation. In addition, it would limit land use conflicts with trails and/or disruption of sensitive views.								

Table 6-2. SunZia Selective Mitigation Measures

Mitigation Measure	Mitigation Examples	Mitigation Application Phase			Mitigation Effectiveness								
					Water Resources		Earth Resources		Biological Resources				
		Engineering, Design, and Location	Construction	Operations	Streams/ Washes	Wetlands/ Springs	Geology/ Soils	Paleontology	Sensitive Wildlife Species	Sensitive Plant Species	Land Use	Visual Resources	Cultural Resources
3. Overland access (i.e., drive-and-crush or cut-and-clear) would be used to the greatest extent possible in areas where no grading would be needed to access work areas. Drive-and-crush is vehicular travel to access a site without significantly modifying the landscape. Vegetation is crushed, but not cropped. Soil is compacted, but no surface soil is removed. Cut-and-clear is considered as brushing off (removal) of all vegetation to improve or provide suitable access for equipment. All vegetation is removed using above-ground cutting methods that leave the root crown intact.	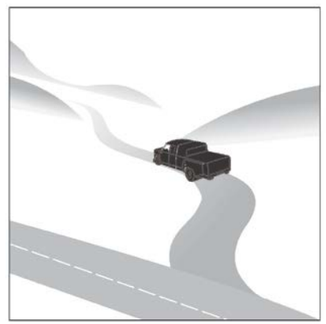		●	●	●	●	●		●	●	●	●	
					Overland access would avoid or minimize the removal of surface soil and vegetation, reducing the potential for erosion and loss of habitat. In addition, avoiding the construction of a new road would reduce the potential for increased traffic and the associated indirect effects.								
4. All new access roads not required for maintenance would be permanently closed using the most effective and least environmentally damaging methods appropriate to that area (e.g., stock piling and replacing topsoil, or rock replacement), with concurrence of the landowner or appropriate land management agency. This would limit new or improved accessibility into the area.	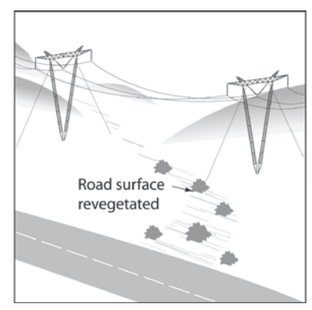			●	●	●	●		●	●	●	●	●
					Closing access roads where they are not needed after construction protects the resources in that area from further disturbance for reasons described in SE 1.								
5. In addition to standard reseeding and recontouring practices (see ST 8), a detailed Project reclamation plan would be developed to mitigate site-specific resource impacts.			●	●	●	●	●		●	●	●	●	

Table 6-2. SunZia Selective Mitigation Measures

Mitigation Measure	Mitigation Examples	Mitigation Application Phase			Mitigation Effectiveness								
					Water Resources		Earth Resources		Biological Resources				
		Engineering, Design, and Location	Construction	Operations	Streams/ Washes	Wetlands/ Springs	Geology/ Soils	Paleontology	Sensitive Wildlife Species	Sensitive Plant Species	Land Use	Visual Resources	Cultural Resources
6. To minimize disturbance to sensitive habitats or resources, access roads required for operations purposes would be gated or otherwise blocked from public access.			●	●					●	●	●		●
					Limiting access to sensitive areas would reduce the potential for indirect effects associated with increased traffic.								
7. Modified tower design or alternate tower type would be used to minimize ground disturbance, operational conflicts, visual contrast, and/or avian conflicts.	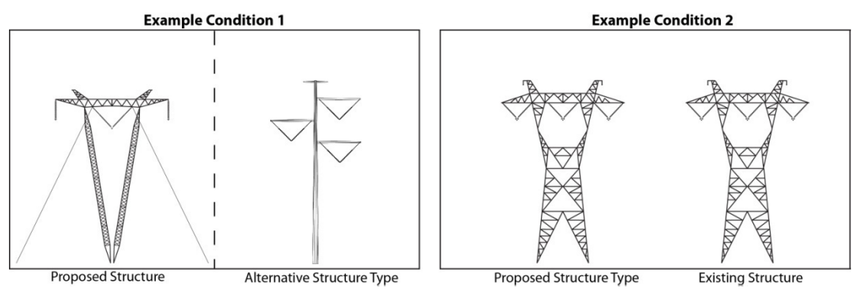	●		●					●		●	●	
					Flexibility in designing the tower or use of different tower types would allow tower structures to be adapted to specific site situations (i.e., Condition 1 – New Route, Condition 2 – Existing Corridor). For example, in areas where there are sensitive views and an existing transmission line, structures used for the Project would match the existing structures, minimizing visual contrast. Structures with perching opportunities for aerial predators where sensitive grassland species occur may be used.								
8. In designated areas, structures would be placed so as to avoid, and/or to allow conductors to span sensitive features such as riparian areas, water courses, roads, trails, bat roosts, and cultural sites within limits of standard tower design. This would minimize the amount of sensitive features disturbed and/or reduce visual contrast.	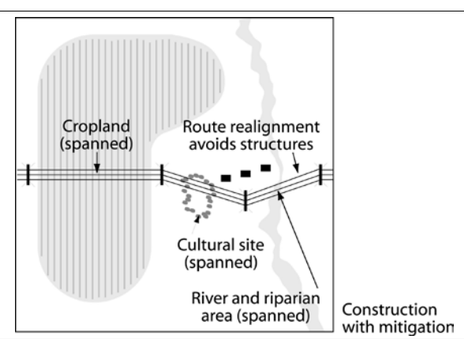	●			●	●	●		●	●	●	●	●
					Flexibility in the placement of structures allows for sensitive features to be avoided. Realigning the structures along a route or realigning the route can result in avoiding or minimizing direct impacts on resources, such as cultural and biological, as well as land uses such as agriculture, parks, preservation, hazardous substance remediation, and recreation areas.								

Table 6-2. SunZia Selective Mitigation Measures

Mitigation Measure	Mitigation Examples	Mitigation Application Phase			Mitigation Effectiveness								
					Water Resources		Earth Resources		Biological Resources				
		Engineering, Design, and Location	Construction	Operations	Streams/ Washes	Wetlands/ Springs	Geology/ Soils	Paleontology	Sensitive Wildlife Species	Sensitive Plant Species	Land Use	Visual Resources	Cultural Resources
9. Standard tower design would be modified to correspond with spacing of existing transmission line structures where feasible, and within limits of standard tower design. The typical span would be modified to correspond with existing structures, but not necessarily at every location. This would reduce visual contrast and/or potential operational conflicts.	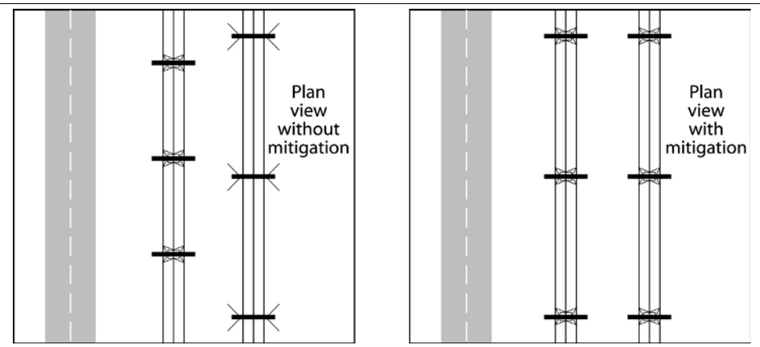	●			●						●	●	●
					Matching tower spacing with existing parallel lines reduces the visual space occupied by the structures and minimizes the amount of contrast between the man-made structures and the landscape.								
10. At highway, canyon, and trail crossings, structures are to be placed at the maximum distance practicable from the crossing to reduce visual impacts.	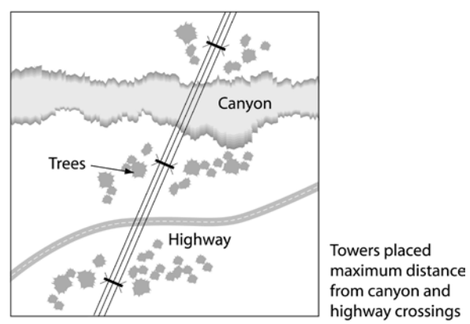	●									●	●	●
					Placing structures at a maximum distance from major or sensitive crossings (i.e., roads and trails) would reduce visual impacts and potential safety hazards (i.e., vehicle collision with tower).								

Table 6-2. SunZia Selective Mitigation Measures

Mitigation Measure	Mitigation Examples	Mitigation Application Phase			Mitigation Effectiveness								
					Water Resources		Earth Resources		Biological Resources				
		Engineering, Design, and Location	Construction	Operations	Streams/ Washes	Wetlands/ Springs	Geology/ Soils	Paleontology	Sensitive Wildlife Species	Sensitive Plant Species	Land Use	Visual Resources	Cultural Resources
11. To reduce visual contrast, mineral or asphalt emulsions (e.g., Permeon™ or approved equivalent) would be applied in rocky areas where newly-exposed rock color would create strong landscape contrasts.	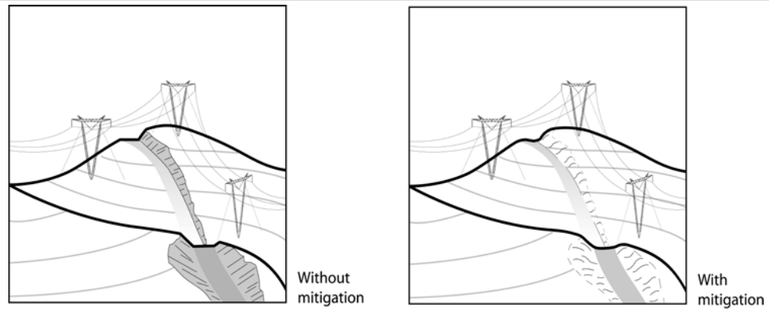	●	●									●	●
					The implementation of mineral or asphalt emulsions (e.g., Permeon™ or approved equivalent) would reduce the visual contrast between exposed ground and the surrounding environment. The application of this mitigation would be determined in the field, during or after construction, by the CIC and Authorized Officers.								
12. With the exception of emergency repair situations, right-of-way construction, restoration, maintenance, and termination activities in designated areas would be modified or discontinued during sensitive periods (e.g., nesting and breeding periods) for candidate, proposed threatened and endangered, or other sensitive animal species. Sensitive periods, species affected, and areas of concern would be approved in advance of construction or operations by the BLM Authorized Officer.	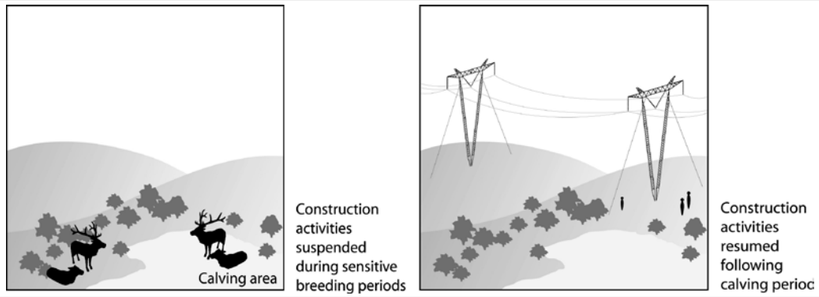		●	●					●				
					Restricting construction activities or maintenance during breeding or nesting periods eliminates potential disturbance of wildlife during these critical periods of their life cycles.								
13. Helicopter placement of structures may be used to reduce ground disturbance (e.g., to minimize soil erosion, vegetation loss, and visual impacts).	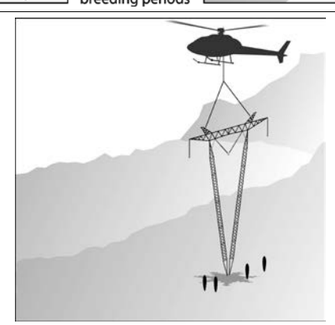		●				●	●	●	●	●	●	●
					Using helicopters to place structures in steep terrain or otherwise sensitive areas reduces land use and natural resource impacts that would otherwise result from ground-disturbing activities. The decrease of ground disturbance would reduce the loss of vegetation, soil erosion, potential damage to cultural resources, and visual impacts.								

Table 6-2. SunZia Selective Mitigation Measures

Mitigation Measure	Mitigation Examples	Mitigation Application Phase			Mitigation Effectiveness								
					Water Resources		Earth Resources		Biological Resources				
		Engineering, Design, and Location	Construction	Operations	Streams/ Washes	Wetlands/ Springs	Geology/ Soils	Paleontology	Sensitive Wildlife Species	Sensitive Plant Species	Land Use	Visual Resources	Cultural Resources
14. To minimize disturbance to riparian vegetation and woodlands, and to reduce visual contrast, clearing of trees in and adjacent to the right-of-way would be minimized to the extent practicable to satisfy conductor-clearance requirements (NESC and up to 10 years of timber growth). Trees and other vegetation would be removed selectively (e.g., edge feathering) to blend the edge of the right-of-way into adjacent vegetation patterns, as practicable and appropriate.	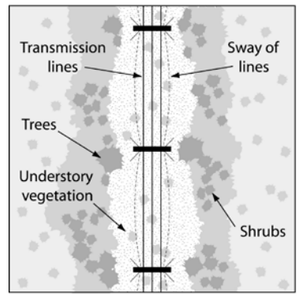		●					●		●	●	
					Selectively removing vegetation (i.e., trees) within and along the edges of the right-of-way reduces disruption of habitat, minimizes removal of timber resources, and reduces the visual contrast between the right-of-way and the surrounding environment. Furthermore, "feathering" the edges of the right-of-way instead of cutting trees and vegetation in a straight line results in a more gradual modification to the environment.								
15. To minimize bird collisions, bird diverters would be installed and maintained on groundwires, transmission lines, and/or guywires in areas of heavy bird use (i.e., Rio Grande and other riparian corridors). Groundwires would be replaced with one-inch diameter OHGWs to increase visibility where practicable and appropriate.	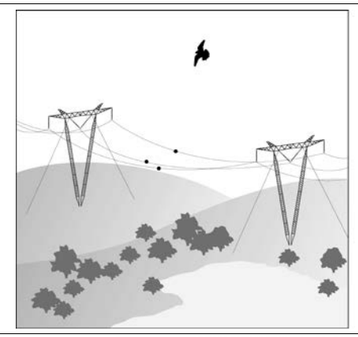		●	●					●				
					Conductor, groundwire or guywire markings on segments of the transmission lines that cross through, or are adjacent to, heavy bird migration corridors and/or habitat would minimize the risk of avian collision.								
16. To reduce ground disturbance and visual contrast, the separation between the transmission lines and existing utilities, roads, or railroads would be minimized to the extent practicable.	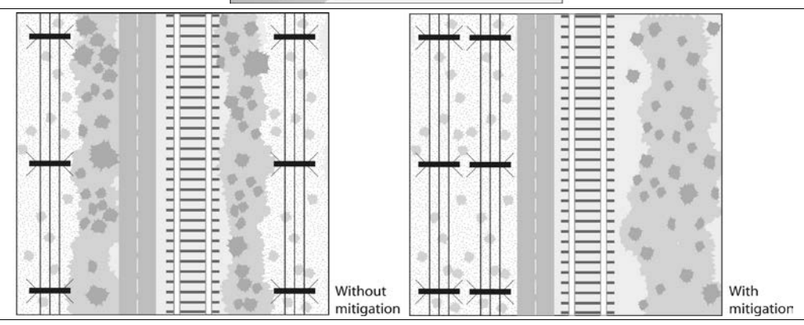	●							●		●	●	
					Consolidating the transmission lines with existing facilities such as roads, railroads, or other utilities (e.g., transmission lines, distribution lines, pipelines, etc.) would typically minimize ground disturbance, habitat fragmentation, and visual contrast. Furthermore, locating the transmission lines within designated utility corridors (where established) minimizes potential land use conflicts and other resource impacts.								

6.2 SPECIFIC ENVIRONMENTAL CONCERNS AND APPLICABLE MITIGATION MEASURES

This section of the POD briefly describes environmental resource concerns identified in previous studies, as well as through field investigations and surveys conducted for the Project. This is followed by a general description of key mitigation measures that have been identified to address these specific resource concerns through the Engineering/Design, Construction, and Operation and Maintenance phases of the Project. Additional information in support of this discussion is found in the appendices to this POD. Refer to Table 6-1 and Table 6-2 for details regarding Standard and Selective mitigation as they relate to the tables for each resource below.

6.2.1 Land Use

Land use impacts include those that would displace, alter, or otherwise physically affect existing or planned land use. Since the transmission line is located primarily on state and BLM lands, these impacts are associated mainly with effects to recreational users, potential conflicts with special designated use areas, and disturbance to grazing allotments. Temporary impacts are expected to occur during construction as a result of activity within the right-of-way, and long-term impacts are primarily associated with the potential for increased access. Appendix D – Other Special Resource Considerations and Mitigation Measures, provides additional information on land use concerns, including impacts to agriculture on private lands, and mitigation. Key mitigation measures designed to minimize impacts to land use include, but are not limited to, the following:

Applicable Mitigation Measures	1	2	3	4	5	6	7	8	9	10	11	12	13	14	15	16	17	18	19	20	21	22	23	24	25	26	27	28
Selective	●	●	●	●	●	●	●	●	●	●			●	●														
Standard		●	●			●		●	●				●				●				●							

6.2.2 Air Quality

Construction of the transmission line and related facilities will cause a temporary increase in fugitive dust. Ambient levels of nitrogen oxides, hydrocarbons, and carbon monoxide near the construction zone also will be temporarily increased due to emissions from heavy construction equipment. Air quality control measures are intended to minimize fugitive dust and air emissions, and to maintain conditions as free from air pollution as possible. Emissions produced during grading and construction activities are of short-term duration and will cease upon completion of construction. Dust will be minimized by application of water to disturbed areas. Appendix A6 – Erosion, Dust Control, and Air Quality Plan, addresses this in greater detail. Key mitigation measures designed to minimize impacts to air quality include, but are not limited to, the following:

Applicable Mitigation Measures	1	2	3	4	5	6	7	8	9	10	11	12	13	14	15	16	17	18	19	20	21	22	23	24	25	26	27	28
Selective			●	●		●																						
Standard	●	●		●	●	●		●												●								

6.2.3 Noise

Some increased level of noise will result from the construction and maintenance of the transmission line. During construction, noise would be generated from equipment used for grading (e.g., access roads, staging areas, and tower sites), tower construction activities, helicopters, vehicle movement along the corridor, and blasting. Additionally, noise will be generated during post-construction rehabilitation. These noise levels will be temporary in nature and isolated to areas of construction. Some low levels of residual audible noise may result from the conductors, a phenomenon referred to as corona-generated noise. Appendix D – Other Special Resource Considerations and Mitigation Measures, provides additional information on noise concerns and mitigation. Key mitigation measures designed to minimize noise impacts include, but are not limited to, the following:

Applicable Mitigation Measures	1	2	3	4	5	6	7	8	9	10	11	12	13	14	15	16	17	18	19	20	21	22	23	24	25	26	27	28
Selective	●	●	●	●		●																						
Standard																●						●						

6.2.4 Earth Resources and Soils

The principal type of impact associated with earth resources is the potential for increased soil erosion. Some short-term soil compaction and stream sedimentation could also occur as a result of heavy construction equipment traveling along access roads. Specific mitigation measures that address erosion are described in greater detail in Appendix A6 – Erosion, Dust Control, and Air Quality. Key mitigation measures designed to minimize impacts to soils include, but are not limited to, the following:

Applicable Mitigation Measures	1	2	3	4	5	6	7	8	9	10	11	12	13	14	15	16	17	18	19	20	21	22	23	24	25	26	27	28
Selective	●	●	●	●	●			●					●															
Standard	●	●	●	●	●	●		●										●	●									

6.2.5 Water Resources

No substantial impacts are anticipated for surface and groundwater resources, and the impacts (if any) associated with the Project will be covered under Nationwide Permit Number 12 (for jurisdictional waters). Water used for dust control, during construction of the transmission line, will be obtained from commercial sources to be identified by the construction contractor(s).

Construction activities in proximity to ephemeral washes and drainages may cause short-term impacts to stormwater runoff characteristics; however, no major diversions or long-term disturbance to drainages are expected as a result of the Project. The release of hazardous materials, such as diesel fuel, gasoline, oil, hydraulic fluid, or other fluids and substances from vehicles and equipment, during construction could flow into nearby washes and drainages or infiltrate the soil. There is potential that this could degrade surface water quality in the event of stormwater run-off; however, impacts are expected to be minimal as no hazardous materials are allowed within 100 feet of washes or drainages, and all hazardous waste spills will be attended to immediately. Appendices A6 – Erosion, Dust Control, and Air Quality Plan; A7 – Hazardous Materials Management Plan; and Appendix E – Stormwater Pollution and Prevention Plan Methodology address water resource concerns and mitigation in greater detail. Key mitigation measures designed to minimize impacts to water resources include, but are not limited to, the following:

Applicable Mitigation Measures	1	2	3	4	5	6	7	8	9	10	11	12	13	14	15	16	17	18	19	20	21	22	23	24	25	26	27	28
Selective	●	●	●	●	●			●																				
Standard	●								●									●	●						●			

6.2.6 Visual Resources

Visual impacts associated with the construction of the Project include the effects to the quality of scenic resources, as well as the views from sensitive land use and recreation areas or sites and from sensitive and scenic travel routes. Visual impacts that are expected to occur as a result of the Project are based primarily on the introduction of new facilities in the landscape when visible from these sensitive locations. Through the selective location of facilities, the use of dulled-metal or COR-TEN finish on all tower structures, and the use of non-specular conductors, these

impacts will be minimized. Appendix D – Other Special Resource Considerations and Mitigation Measures, provides additional information on visual resource concerns and mitigation. Key mitigation measures designed to minimize visual impacts include, but are not limited to, the following:

Applicable Mitigation Measures	1	2	3	4	5	6	7	8	9	10	11	12	13	14	15	16	17	18	19	20	21	22	23	24	25	26	27	28
Selective	●	●	●	●	●		●		●	●	●		●	●														
Standard	●	●	●	●	●	●		●		●	●																	

6.2.7 Wastes, Hazardous or Solid

The contractor will comply with applicable laws pertaining to proper usage and disposal of potentially hazardous materials. Trash and solid waste, generated from construction activities, will be stored in closed containers and disposed of in accordance with regulatory requirements. Any spills will be immediately reported to the CIC and construction inspectors, so that cleanup can be implemented immediately. The construction contractor(s) will notify the appropriate authorities (i.e., CIC and BLM) if a spill occurs. All spill materials will be labeled and stored at the contractors designated facility off the right-of-way for accumulation and disposal. Appendix A7 – Hazardous Materials Management Plan, addresses this in greater detail. Key mitigation measures designed to minimize impacts related to hazardous waste include, but are not limited to, the following:

Applicable Mitigation Measures	1	2	3	4	5	6	7	8	9	10	11	12	13	14	15	16	17	18	19	20	21	22	23	24	25	26	27	28
Selective																												
Standard	●																						●					

6.2.8 Cultural and Paleontological Resources

Direct, adverse physical impacts could occur to cultural and paleontological resources during construction, while indirect impacts could result after construction due to increased erosion or increased public access to sites along the transmission right-of-way. Adverse visual effects may occur to cultural sites with high aesthetic or interpretive values.

A cultural inventory is being conducted which will document cultural resources within the area of potential effect for the Project. Based on the results of this inventory, a Historic Properties Treatment Plan (HPTP) will be developed to specifically address direct and indirect impacts that

may result from the construction of the Project. When completed, the HPTP will be included in Confidential Appendix C1 – Historic Properties Treatment Plan.

Based on the field reconnaissance and literature review, a Paleontological Treatment Plan has been developed to specifically address direct and indirect impacts that may result from the construction of the Project. Appendix C4 – Paleontological Resources Literature Review and Treatment Plan, provides additional detailed information on paleontological concerns and mitigation. Key mitigation measures designed to minimize impacts to cultural and paleontological resources include, but are not limited to, the following:

Applicable Mitigation Measures	1	2	3	4	5	6	7	8	9	10	11	12	13	14	15	16	17	18	19	20	21	22	23	24	25	26	27	28
Selective	●	●		●		●		●	●	●	●		●															
Standard	●	●	●			●								●	●									●				

6.2.9 Biological Resources

Potential impacts to biological resources include effects on threatened, endangered, or protected species, rare or unique vegetation types, migration corridors for wildlife, areas of low re-vegetation potential, or highly productive wildlife habitat. The impacts would generally be associated with the removal of vegetation and habitat caused by construction and operation activities, and from human activity and increased access into remote areas. Following is a summary of the potential key concerns and the mitigation measures associated with biological resources, including wildlife and vegetation. Detailed information regarding mitigation associated with biological resources also is presented in Appendix B1 – Biological Resources Protection Plan, and Appendix B2 – Noxious Weed Management Plan.

6.2.9.1 Wildlife

Issues for wildlife species and important wildlife habitats are related primarily to increased public access into remote areas and/or ground disturbance. Ground disturbance caused by construction of the transmission line may result in habitat loss and degradation; and increased public access into remote areas during and following construction may result in increased injury, mortality, or other harm of certain species. Increased public access also may result in habitat damage from off-road vehicle use, accidentally set fires, and direct mortality of individual animals resulting from increased or higher speed vehicular traffic. Additionally, the introduction and presence of the transmission towers in an area of low vegetation would increase the potential for long-term avian predation of sensitive wildlife species by providing roosting/hunting perches.

The Project EIS and subsequent studies have identified that impacts to crucial big game habitat (e.g., Mule Deer, Pronghorn Antelope) could occur. Mitigation has been developed to minimize the extent of these potential impacts. Through the selective location of facilities, modified tower

design, seasonal timing of construction, the limiting of ground disturbance, and the use of biological monitors, these effects will be reduced. Both the Biological Assessment and Appendix B1 – Biological Resources Protection Plan, present additional detailed information regarding wildlife concerns and associated mitigation. Key mitigation measures designed to minimize impacts to wildlife include, but are not limited to, the following:

Applicable Mitigation Measures	1	2	3	4	5	6	7	8	9	10	11	12	13	14	15	16	17	18	19	20	21	22	23	24	25	26	27	28
Selective		●	●	●	●	●	●	●	●			●	●	●	●													
Standard	●	●	●		●	●	●	●	●					●					●		●				●		●	

6.2.9.2 Vegetation

The management of protected plants present in the access roadways and work areas will be in accordance with Appendix F – Right-of-Way Preparation, Reclamation, and Monitoring Framework Plan, upon completion of construction. Preconstruction surveys will be conducted to identify the locations of special status species habitats and plants, and these locations will be flagged and avoided during construction, to the fullest extent practicable. Mitigation measures that minimize and contain the level of disturbance will assist in minimizing impacts to vegetation, and areas of temporary disturbance will be restored in accordance with the Right-of-Way Preparation, Reclamation, and Monitoring Framework Plan. Key mitigation measures designed to minimize impacts to vegetation include, but are not limited to, the following:

Applicable Mitigation Measures	1	2	3	4	5	6	7	8	9	10	11	12	13	14	15	16	17	18	19	20	21	22	23	24	25	26	27	28
Selective	●	●	●	●	●	●		●					●	●														
Standard	●	●	●	●	●	●		●						●									●		●	●		●

6.2.9.3 Noxious Weeds and Invasive Species

Noxious weeds and invasive species tend to spread readily, and they typically displace native plant species or bring about changes in species composition, community structure, and/or ecological function. The Arizona and New Mexico Departments of Agriculture have identified a group of noxious weeds and invasive species that occur within their respective state; some of these species are known to be present in the proposed transmission corridor. Surveys of the Project area will identify noxious weeds and invasive species within the area. When noxious weeds are encountered within the construction area, mitigation measures will be instituted in

consultation with the BLM botanist or as agreed to in Appendix B2 – Noxious Weed Management Plan. Following construction, right-of-way monitoring and abatement also will be conducted as defined in the Noxious Weed Management Plan. Key mitigation measures designed to minimize effects of noxious weeds include, but are not limited to, the following:

Applicable Mitigation Measures	**1**	**2**	**3**	**4**	**5**	**6**	**7**	**8**	**9**	**10**	**11**	**12**	**13**	**14**	**15**	**16**	**17**	**18**	**19**	**20**	**21**	**22**	**23**	**24**	**25**	**26**	**27**	**28**
Selective	●	●	●	●	●	●	●	●				●																
Standard	●	●	●	●	●	●		●						●									●			●		

Appendix A – Construction Considerations

Appendix A1 – Construction Plan and Program

TABLE OF CONTENTS

1. Introduction A1-1
  1.1. Purpose A1-1
2. Contractor and Agency Coordination A1-1
3. PreConstruction Activities A1-1
  3.1. Surveying and Staking the Transmission Centerline, Other Project Features, and Work Areas A1-2
  3.2. Preconstruction Resource Surveys A1-2
  3.3. Right-of-Way Preparation A1-2
  3.4. Additional Preconstruction Activities A1-3
4. General Transmission Line Construction Activities A1-3
  4.1. Upgrading or Construction of Temporary and Permanent Access Roads A1-4
  4.2. Clearing and Grading Activities for the Right-of-Way, Structure Sites, Staging Areas, and Batch Plants A1-7
  4.3. Excavating and Installing Foundations A1-8
  4.4. Assembling and Erecting Structures with Temporary and Permanent Pad Sites A1-9
  4.5. String Conductors, Ground Wires, and Fiber Optic Cable A1-9
  4.6. Installing Counterpoise (Structure Grounds) Where Needed A1-10
  4.7. Clean-up and Reclamation of Affected Areas A1-11
  4.8. Additional Construction Components A1-11
  4.9. Transmission Line Construction Work Force and Schedule A1-13
5. General Substation Construction A1-15
  5.1. Access Roads A1-15
  5.2. Clearing and Grading A1-15
  5.3. Grounding A1-16
  5.4. Fencing A1-16
  5.5. Foundation Installation A1-16
  5.6. Oil Containment A1-17
  5.7. Structure and Equipment Erection/Installation A1-17
  5.8. Control Building Erection A1-17
  5.9. Conduit and Control Cable Installation A1-17
  5.10. Landscaping and Construction Cleanup A1-18

LIST OF TABLES

Table A1-1. Estimated Personnel and Equipment for Transmission Line Construction A1-13

LIST OF FIGURES

Figure A1-1. Typical Right-of-Way Configuration Where New Access is Required..... A1-6
Figure A1-2. Typical Roadway Cut and Fill Conditions..... A1-7
Figure A1-3. Foundation Installation, Structure Assembly, and Structure Erection..... A1-10
Figure A1-4. Typical Transmission Line Conductor Stringing Activities A1-11

1. INTRODUCTION

The following appendix describes the process anticipated during the construction of the SunZia Southwest Transmission Project (Project). Included are the considerations for coordination between applicable agencies and the Construction Contractor; preconstruction activities; construction workforce and schedule; general construction activities; and additional construction components.

1.1. Purpose

The purpose of the Construction Plan and Program is to provide construction crews, the Compliance Inspection Contractor (CIC), and environmental inspectors (see Appendix A9) with Project-specific information concerning construction activities and to provide detail on the construction process for the Project.

2. CONTRACTOR AND AGENCY COORDINATION

Following the award of the construction contract, but prior to the initiation of construction, a preconstruction kickoff meeting will be conducted to introduce the contractors and their field representatives; discuss schedules; review any construction stipulations (including those found in the Record of Decision [ROD], right-of-way grant, Plan of Development [POD], etc.); and identify each agency's point of contact and responsibilities as described in Section 2.1 of the POD. The CIC will preside over the meeting and review the key environmental issues associated with the Project and the required mitigation measures that will be followed. In addition, all supervisory construction personnel will be instructed on the protection of biological, cultural, paleontological, and other resources, including their specific mitigation measures. The process for conducting worker environmental training will also be reviewed (see Section 4 of this POD for more detail on the environmental training program for Project construction workers).

As construction proceeds, the CIC will continue to monitor construction activities and ensure compliance with general and specific resource mitigation measures. If any modification to the approved Project is required, the CIC will be notified and the process for addressing deviations during construction will be followed (see Section 4.4 and Appendix A9 – Section 4.2 of the POD).

Following completion of construction, the Project will be mapped "As-Built" and the plans will be submitted to the Bureau of Land Management (BLM) for review and comment. A Project close-out meeting will be held following the completion of construction (see Appendix A9).

3. PRECONSTRUCTION ACTIVITIES

Following is a sequential description of the activities required prior to initiating construction of the major and ancillary facilities of the Project.

- surveying and staking the transmission centerline, other Project features, and work areas
- preconstruction resource surveys

- right-of-way preparation
- additional preconstruction activities

3.1. Surveying and Staking the Transmission Centerline, Other Project Features, and Work Areas

Ground survey and staking will be performed to locate structure centers, right-of-way boundaries, new access roads, spur roads to structure work areas, overland access, and temporary work areas. Environmental monitoring activities will be in place during this phase. Specific flagging and staking procedures are described in detail in the Flagging, Fencing, and Signage Plan (see Appendix A2). Flagging will be maintained until final cleanup and/or reclamation is completed, after which they will be removed.

3.2. Preconstruction Resource Surveys

Prior to construction, several surveys are to be completed to identify sensitive resources and determine potential mitigation. Investigations will include: (1) surveys for plants and wildlife species designated by Section 7 of the Endangered Species Act, or as specified by the appropriate land management agency and state or county authority as sensitive or of concern, in areas of known occurrence or habitat; (2) noxious weed surveys; (3) cultural resource surveys; and (4) Section 404 of the Clean Water Act field verification. Mitigation measures to address potential issues associated with the construction of the Project relative to these resources are included in this POD. The results of these resource surveys—as they apply to construction, operation, and maintenance activities, and mitigation measures—will be included as applicable in Volume II, Map Sets 1 and 2 of the Final POD.

Prior to construction of the Project, additional surveys may be required, such as geotechnical investigations, in conjunction with final engineering in order to evaluate geotechnical characteristics, and specific requirements for foundation construction. Any additional field studies required will be coordinated with the BLM, and the appropriate clearances will be obtained. Once complete, the results of final engineering will be incorporated into the Final POD, including construction details for grading, drainage, and specialized slope treatments, and the Construction Contractor will implement the plans. The CIC will inspect and certify that the slopes have been constructed and stabilized in accordance with the details in the POD.

3.3. Right-of-Way Preparation

Right-of-way preparation includes general site preparation involving flagging of the right-of-way boundaries and construction areas (see Appendix A2). It also includes identification of plants to preserve in place, weed infested areas, and storage areas for windrowed plant and soil materials. Postconstruction sites for monitoring reclamation success will also be established during preconstruction activities, as described in Appendix F – Right-of-Way Preparation, Rehabilitation, and Reclamation Framework Plan.

Preconstruction actions focus on protection of sensitive areas and resources identified in the environmental documents (Draft and Final Environmental Impact Statements (EIS), right-of-way grant, POD, Biological Assessment [BA], Programmatic Agreement (PA), Historic Properties

Treatment Plan [HPTP], etc.) prepared for the Project. Project construction may begin after all right-of-way preparation actions have been completed for that area.

Right-of-way preparation actions identified for the Project are outlined below.

- flagging the limits of the right-of-way and construction areas (see Appendix A2)
- flagging sensitive resource and/or avoidance areas (see Appendix A2, B1, and B2)
- postconstruction monitoring transect selection (see Appendix F)
- Noxious Weed Management Plan implementation (see Appendix B2)

Further discussion on the right-of-way preparation and preconstruction activities can be found in Appendix F – Right-of-Way Preparation, Rehabilitation, and Monitoring Framework Plan.

3.4. Additional Preconstruction Activities

Through coordination with the BLM and other agencies, as well as private landowners, the Construction Contractor(s) will identify wells and springs in known blasting areas prior to construction.

Specific right-of-way monitoring requirements, including the quantitative transect monitoring protocol described in Appendix F, will be developed by the Reclamation Specialist Subcontractor (see Appendix F) in cooperation with the BLM prior to start of preconstruction activities. If no Reclamation Specialist Subcontractor is retained by the Construction Contractor(s), the Proponent will retain a reclamation specialist to develop the specific monitoring requirements and protocols in cooperation with the BLM.

4. GENERAL TRANSMISSION LINE CONSTRUCTION ACTIVITIES

Following is a sequential description of the activities associated with the construction of the major and ancillary facilities of the Project. These activities include the following tasks, the schedule for which will be included in the Final POD.

- upgrading or construction of temporary and permanent access roads
- clearing and grading activities for the right-of-way, structure sites, staging areas, and batch plants
- excavating and installing foundations
- assembling and erecting structures with temporary and permanent pad sites
- stringing conductors and groundwires and fiber optic cable
- installing counterpoise (structure grounds) where needed
- cleanup and reclamation of affected areas

Construction activities will be scheduled to avoid particular areas during critical wildlife seasons (e.g., mule deer winter range, etc.). These seasonal avoidance areas will be shown in Volume II – Map Sets 1 and 2 of the Final POD, and explained further in Appendix B1 – Biological Resources Protection Plan.

4.1. Upgrading or Construction of Temporary and Permanent Access Roads

Construction of the new 500-kilovolt (kV) transmission lines will typically require vehicle, truck, and crane access to each new structure site for construction crews, materials, and equipment. Access roads must be sufficient to bear the weight and endure heavy construction vehicle use. The appropriate agencies and private landowners will be consulted before road construction begins. Roads will be upgraded or constructed in accordance with agency requirements (e.g., BLM requirements for road construction, BLM Manual 9113, 1985 and 2007) and the applicable mitigation measures (see Appendix A2 – Transportation Management Plan). The general locations of proposed new and existing access roads will be shown in the Final POD Volume II, Map Sets 1 and 2. New access and upgraded roads to be identified in Volume II will be surveyed for cultural, paleontological, and biological resources, and may be resurveyed immediately before construction to identify avoidance requirements for plants and wildlife, especially species designated by Section 7 of the Endangered Species Act or as specified by the appropriate land management agency and state or county authority as sensitive or of concern, in selected areas, as described in Appendix B1 – Biological Resources Protection Plan.

Where possible, existing paved and unpaved highways and roads will be used for the initial transportation of materials and equipment from the staging and storage areas to locations where they will be needed along the transmission line right-of-way. If necessary, existing roads will be upgraded, and all roads utilized will be left in a condition equal to or better than their condition prior to construction (see Appendix A2).

Where possible, existing access roads will be used and, as required, new spur roads to structure sites will be constructed and located to minimize impacts. The number of new spur roads will be held to a minimum, consistent with their intended use (e.g., structure construction or conductor stringing and tensioning). If existing access requiring improvements has been identified for use, it is assumed that most of these roads are approximately 10 feet wide (e.g., two-track roads) and could require up to 14 feet of additional improvement for equipment access (i.e., widening of existing access).

Where new roads are required to meet the access needs of the Project, it is anticipated that a single new road would be constructed to serve both 500 kV facilities (Figure A1-1). In locations of steep or rugged terrain, two separate access roads may be required to accommodate construction of the two parallel transmission lines. New roads may be built as either temporary or permanent access. Where new roads are required for construction purposes only, or to access temporary work areas (e.g., wire pulling and tensioning sites, concrete batch plants, etc.), access roads may be built for temporary use. Temporary roads serve the needs for Project access during the construction phase, but are not anticipated to be necessary for operation, maintenance, or decommissioning purposes. Upon completion of construction activities, temporary access roads will be reclaimed according to the procedures specified in Appendix F – Right of Way Preparation, Rehabilitation, and Restoration Plan of the Final POD, and the access blocked as determined through mutual agreement by the Project Proponent (SunZia Transmission, LLC), other potential users, and the BLM. Where new roads are required for construction, operation, and maintenance purposes, or where landowners or land-management agencies require, access roads will be constructed for permanent use.

All access roads (new, improved, or spur), temporary or permanent, will typically be constructed with a travel-surface width of 20 feet, and 2-foot berms and/or drainage ditches on both sides of the travel surface, for a total roadway width of 24 feet. In steep terrain, total disturbance will likely exceed 24 feet, due to cut and fill conditions (Figure A1-2). In addition, roads may be routed around specific areas due to topographical constraints or to avoid sensitive resources. As-built drawings showing these and other necessary deviations will be submitted to the BLM upon completion of construction of the Project. In some locations, helicopters may be used for construction (structure placement) in areas where there are environmental constraints, terrain restrictions, or where it is economically practical.

To reduce the severity of Project disturbance where operation and maintenance access will be required, overland road construction methods (i.e., overland drive and crush; overland cut and clear) may be implemented where feasible. Overland drive and crush is defined as vehicular travel to the Project right-of-way and/or facilities without significantly modifying the landscape; vegetation is crushed but not cropped, thereby minimizing disturbance to root mass and organics in the soil, and soil may be compacted but no surface soil is removed. It is anticipated that overland drive and crush could be implemented where new access is required in flat terrain (0 to 3 percent slope) and within the vegetation communities listed below.

- semidesert grassland
- lower Colorado River subdivision of the Sonoran Desert
- Chihuahuan Desertscrub
- plains and Great Basin grassland
- sand dunes
- plains-mesa grassland
- plains-mesa sandscrub
- desert grassland

Where new roads are required outside of the vegetation communities identified above, and where no grading is necessary (i.e., areas of 0 to 3 percent slope), overland cut and clear would be used to the greatest extent possible. Overland cut and clear is the removal of all vegetation to improve or provide suitable access for equipment. All vegetation is removed using above-ground cutting methods that leave the root mass intact. Soil is compacted but no surface soil is removed.

To the maximum extent possible, drainages will be crossed at grade (referred to as an Arizona crossing). Where Arizona crossings are not feasible, culverts or temporary bridges will be constructed. Any culverts constructed within drainages will be temporary in nature and not exceed one tenth of an acre of disturbance within the wash channel. Any permanent disturbances over one tenth of an acre will require consultation and approval by the CIC, BLM, and U.S. Army Corp of Engineers, and special permits will be required.

During construction, dust control measures will be implemented on all roads as determined by the authorized officer. Methods to minimize dust and erosion control associated with existing and new access is presented in Appendix A6 – Erosion, Dust Control, and Air Quality Plan.

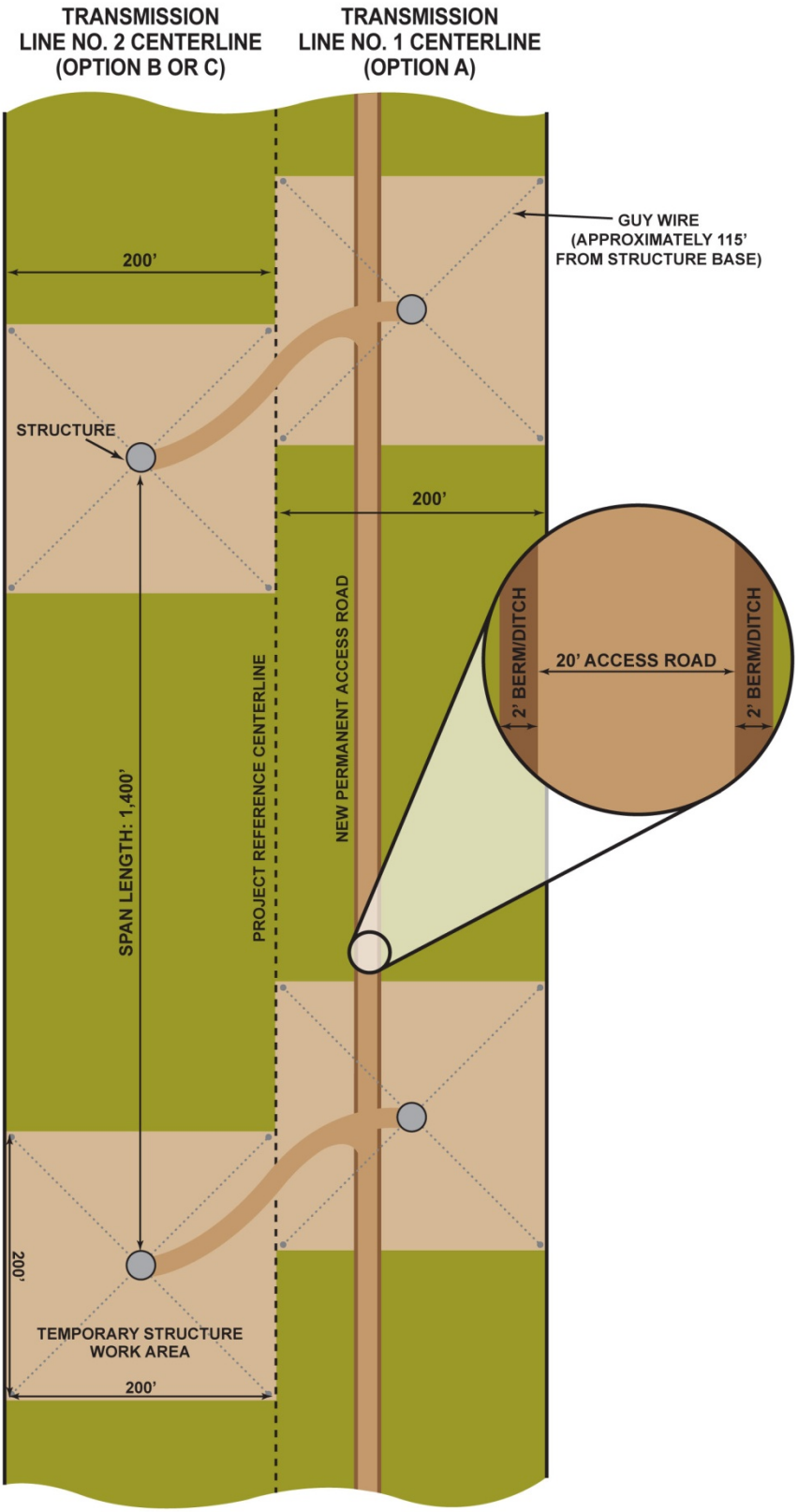

Figure A1-1. Typical Right-of-Way Configuration Where New Access is Required

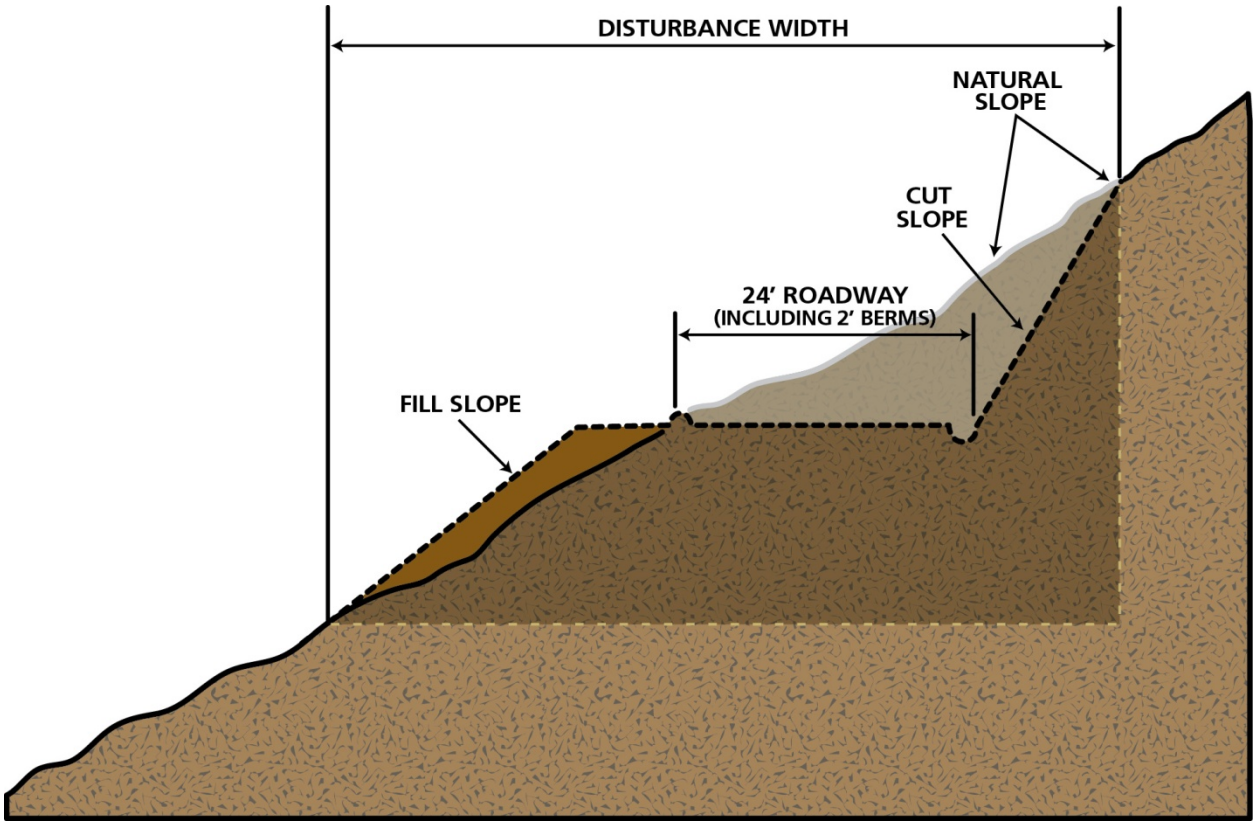

Figure A1-2. Typical Roadway Cut and Fill Conditions

It is assumed that all existing and new permanent access may be used for operations and maintenance purposes, unless otherwise specified by the BLM. In certain areas, roads will be blocked or gates will be installed following completion of construction to restrict future general or public access, as required by the BLM.

4.2. Clearing and Grading Activities for the Right-of-Way, Structure Sites, Staging Areas, and Batch Plants

Clearing of natural vegetation will be required for construction purposes (access roads, structure sites, pulling and tensioning areas, and concrete batch plants/laydown areas), clearances for electrical safety, long-term maintenance, and reliability of the transmission line. Within or adjacent to the right-of-way, mature vegetation will be selectively removed under or near the conductors to provide adequate electrical clearance as required by National Electrical Safety Code (NESC). Trees that could fall onto the transmission line and affect the transmission line during wind-induced conductor swing, or otherwise present an immediate hazard to the transmission line; or have the potential to encroach within safe distance to the conductor as a result of bending, growing, swinging, or falling toward the conductor, will be removed. Where required in selective areas, planned removals and selective clearing plans will be submitted to the CIC for review and approval (see Appendix F – Right of Way Preparation, Restoration, and Rehabilitation).

Individual structure sites will typically be cleared using a bulldozer, to blade the area required to provide a safe working space for placing equipment, vehicles, and materials for tower assembly and erection. Each structure will require a work area of approximately 200 feet by 200 feet (0.92 acre) for temporary construction laydown, tower assembly, and erection. See Table 3-1 in Section 3.1.1 – Transmission Structures, for more information.

Within the work areas described above, the permanent disturbance associated with the structure foundations for the 500 kV structures will be up to 60 feet by 60 feet. The work area will be cleared of vegetation only to the extent necessary. After line construction, all work areas identified as temporary disturbance will be reclaimed in accordance with Appendix F of the Final POD.

Additional equipment may be required if solid rock is encountered at a structure location. Rock-hauling, hammering, or blasting may be required to remove the rock. Excess rock that is too large in size or volume to be spread at the sites will be hauled away and disposed of at approved landfills or at a location specified by the landowner. See Appendix A5 – Blasting Plan Methodology, for a more detailed discussion on blasting protocol, procedures, and requirements.

4.3. Excavating and Installing Foundations

Excavations for foundations will be made with power drilling equipment or excavators. Where soils permit, a vehicle-mounted power auger or backhoe will be used. In rocky areas, the foundation holes will be excavated by drilling or blasting methods, or installing special rock anchors. Foundation holes left open or unguarded will be covered to protect the public and wildlife. If practical, fencing may be used. All safeguards (e.g., blasting mats) associated with using explosives will be employed. Blasting activities will be coordinated with the appropriate agencies, particularly for purposes of safety and protection of sensitive areas and biological resources (see Appendix A5 – Blasting Plan Methodology). In extremely sandy areas, water or a BLM-approved gelling agent will be used to stabilize the soil before excavation. The required water will be procured from municipal sources and/or from landowners.

The typical foundation will be a precast foundation that is delivered to the site on a flat bed truck. An excavation approximately 6 feet in diameter by 5 feet deep will be dug and the base of the foundation will be compacted with select material. The precast foundation will be set into the excavation and onto the compacted base. The excavation will then be backfilled and compacted.

Lattice tower footings will be installed by placing reinforcing steel and a tower stub into the foundation hole, positioning the stub, and encasing it in concrete. Spoil material (excavated soil) will be used for fill where suitable, and the remainder will be spread at the structure site or along graded access roads, or in locations previously agreed upon by the Project Proponent and the BLM. In areas where H-frame structures are being used, increased volumes of spoils (based on foundation size and depth) may require spreading of spoils beyond the general disturbance area, in order to maintain grades and runoff and to facilitate restoration. These locations will be mitigated on a case by case basis and tracked by the CIC. The foundation excavation and installation will require access to the site by power augers or drills, cranes, material trucks, and ready-mix concrete trucks. Foundation holes left open or unguarded will be covered to protect the public and wildlife; if practicable, fencing may be used.

4.4. Assembling and Erecting Structures with Temporary and Permanent Pad Sites

4.4.1. Conventional Method of Assembly and Erection

Structures and associated hardware, insulators, and stringing sheaves will be transported to each structure site by truck. The structure will be assembled on the ground and then lifted onto the foundations (see Figure A1-3 for a general illustration of this procedure).

4.4.2. Helicopter Method of Assembly and Erection (Optional)

The Project Proponent may elect to use a helicopter method of erection in specific locations, where standard construction methods are not considered feasible due to terrain or other factors. The helicopter will be used to transport the structure, insulators, and hardware to the structure site. In addition, the helicopter may be used to erect the structure, instead of a crane (see Section 4.8.4 of this Appendix for additional details on the use and refueling of helicopters during construction).

4.5. String Conductors, Ground Wires, and Fiber Optic Cable

Insulators, hardware, and stringing sheaves will be delivered to each structure site. The structures will be rigged with insulator strings and stringing sheaves at each groundwire and conductor position.

For protection of the public during wire installation, guard structures will be erected over highways, railroads, power lines, structures, and other barriers. Guard structures will consist of H-frame wood poles placed on either side of the barriers or by using boom trucks raising a guard cross-beam. These structures will prevent groundwires, conductors, or equipment from falling across obstacles. Equipment for erecting guard structures will include augers, backhoes, line trucks, boom trucks, pole trailers, and cranes. Guard structures may not be required for small roads; in such cases, safety measures such as barriers, flagmen, or other traffic control will be used. Following stringing and tensioning of all conductors, the guard structures will be removed and the area restored.

Pilot lines will be pulled (strung) from structure to structure by either a helicopter or land-operated equipment, and threaded through the stringing sheaves at each structure. The pilot lines will be used to pull in a stronger, larger diameter line attached to conductors, which pull them onto structures. This process will be repeated until the groundwire or conductor is pulled through all sheaves.

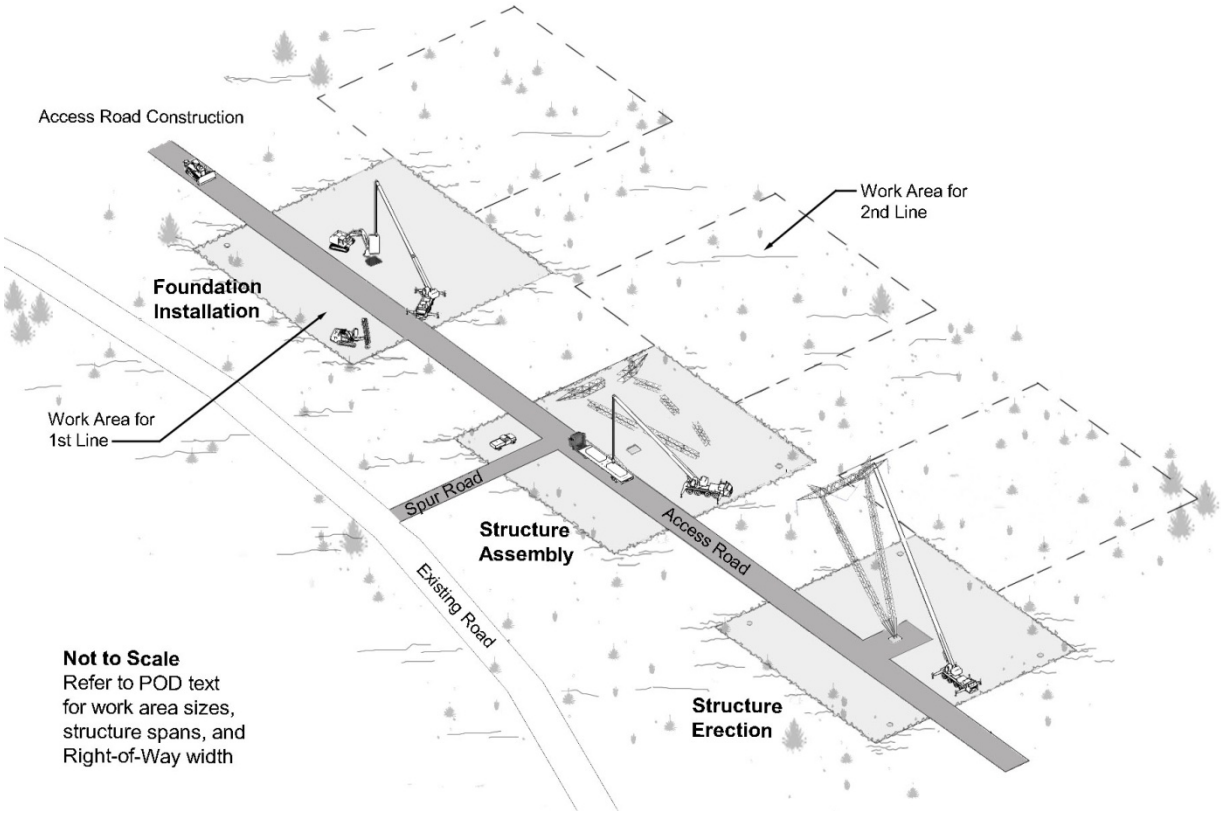

Figure A1-3. Foundation Installation, Structure Assembly, and Structure Erection

Groundwires, fiber optic cable, and conductors will be strung using powered pulling equipment at one end and powered braking or tensioning equipment at the other end of a conductor segment. Sites for tensioning equipment and pulling equipment will be approximately 2 to 4 miles apart, as identified in the POD Volume II (Map Set 2). The tensioning and pulling sites will be an area approximately 200 feet by 400 to 600 feet, depending on the structure's purpose (e.g., mid-span or dead-end). Tensioners, pullers, line trucks, wire trailers, dozers, pickups, and tractors needed for stringing and anchoring the groundwire or conductor will be located at these sites. The tensioner, in concert with the puller, will maintain tension on the groundwire or conductor while they are fastened to the structures (see Figure A1-4 for a general illustration of this procedure). Caution also will be exercised during construction to avoid scratching or nicking the conductor surface, which may provide points for corona to occur.

4.6. <u>Installing Counterpoise (Structure Grounds) Where Needed</u>

Part of standard construction practices prior to conductor installation will involve measuring the resistance of the ground to electrical current near the structures. If the measurements indicate a high resistance, counterpoise will be installed, which will consist of trenching inground wire to a depth of 12 inches in noncultivated land and 18 inches in cultivated land, with a ground rod driven at the end. The counterpoise will be contained within the limits of the right-of-way, and may be altered or doubled back and forth to meet the requirements of the Project. Typical equipment used for installing ground rods includes line trucks, backhoes, trenchers, etc.

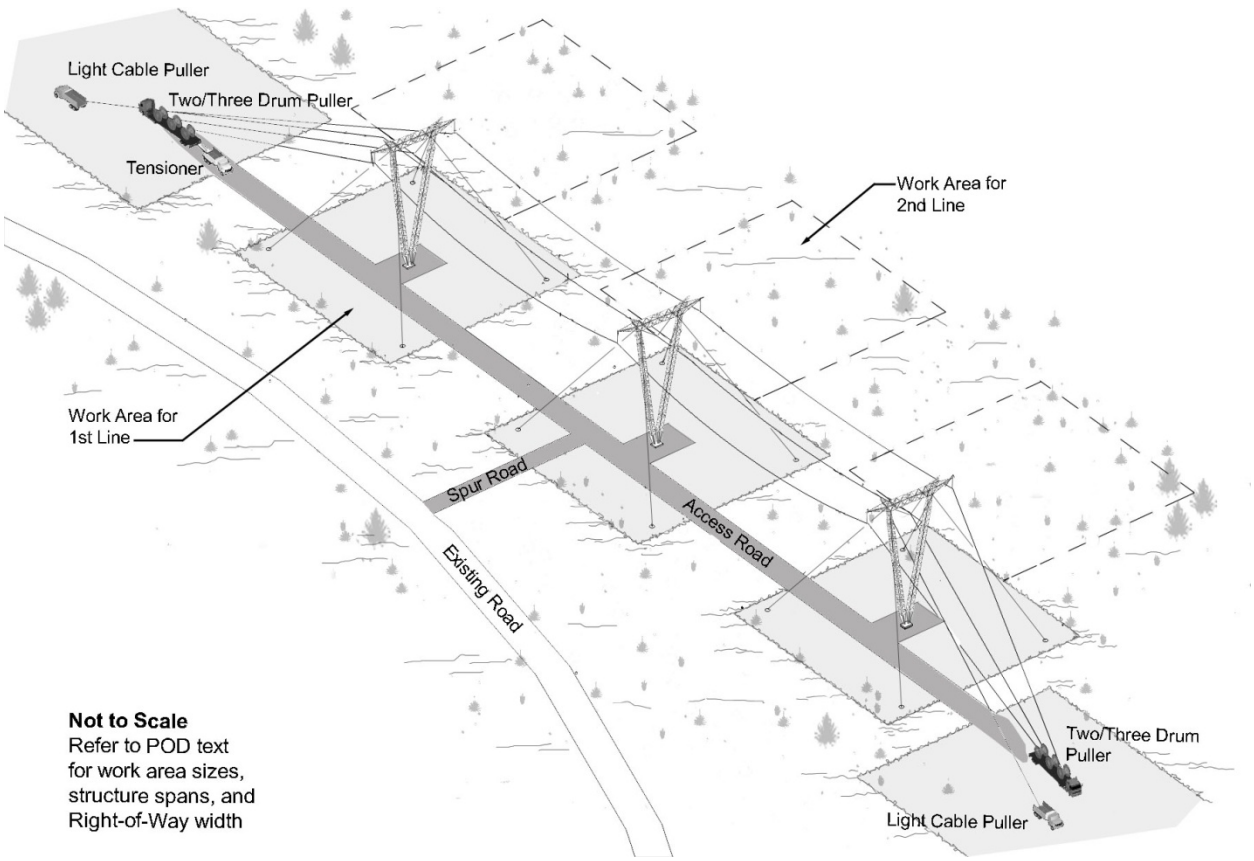

Figure A1-4. Typical Transmission Line Conductor Stringing Activities

4.7. Clean-up and Reclamation of Affected Areas

Construction sites, material storage yards, and access roads will be kept in an orderly condition throughout the construction period. Refuse and trash will be removed from the sites and disposed of in an approved manner (e.g., in an approved landfill). In remote areas, trash and refuse could be removed to a construction staging area and contained temporarily until such time as it could be hauled to an approved site. No open burning of construction trash would occur. Contaminants such as oils, hydraulic fluids, antifreeze, and fuels will not be dumped on the ground, and all spills will be cleaned up (see Appendix A7 – Hazardous Materials Management Plan).

The right-of-way will be restored as near to its original condition as practicable when construction is complete, as specified in Appendix F – Right of Way Preparation, Rehabilitation, and Restoration Plan. The method of reclamation will normally consist of, but is not limited to, returning disturbed areas back to their natural contour, reseeding, installing cross drains for erosion control (where feasible), placing water bars in the road, and filling ditches.

4.8. Additional Construction Components

The following are additional components for the construction of the Project that will be used in conjunction with the general construction activities discussed previously.

4.8.1. Construction Storage Yards and Concrete Batch Plants

Previously disturbed BLM land and/or private property will be used to the maximum extent practicable for construction staging and personnel reporting. It is estimated there will be five to seven material storage yards used during construction of this Project, ranging in size from 15 to 20 acres each. Potential locations for these yards are identified in Section 3, Table 3-1 of this POD and will be used throughout construction of the Project for receiving, storage, and transfer of required materials.

Concrete for use in the structure foundations will be dispensed from a portable concrete batch plant located at approximately 15- to 20-mile intervals (see Volume II, Map Sets 1 and 2). It is estimated there will be 18 to 20 portable batch plant locations required for this Project, ranging in size from 3 to 5 acres each. Equipment typically required at a batch plant site includes generators, concrete trucks, front end loaders, Bobcat loaders, dump trucks, transport trucks and trailers, water tanks, concrete storage tanks, scales, and job site trailers. Rubber-tired trucks and flatbed trailers will be used to assist in relocating the portable plant along the right-of-way. Commercial ready-mix concrete may be used when access to structure construction sites is economically feasible. Concrete chips or slurry generated from the cleaning of concrete from equipment will be disposed of by hauling to a Project construction storage yard or an approved BLM dump site (see Appendix A7).

The construction yards and batch plants may also serve as field offices, reporting locations for workers, parking areas for vehicles and equipment, and locations for equipment maintenance. All required permits and approvals needed for additional construction storage yards and batch plants not previously identified will be obtained by the Construction Contractor.

4.8.2. Equipment Staging

Staging of equipment will be located at pulling and tensioning sites or work areas previously described. Equipment to be used on specific Project activities at nearby locations will be temporarily laid out at these work areas.

4.8.3. Equipment Refueling

The contractor will implement standard refueling procedures for heavy equipment that is left on the right-of-way for long periods of time, such as cranes, blades, dozers, drill rigs, etc. This equipment will be refueled in place. As a rule, no personal or light duty vehicles will be allowed to refuel on the right-of-way. Procedures and precautions similar to those for helicopter refueling would be used (see Appendix A7 – Hazardous Materials Management Plan).

4.8.4. Helicopter Use and Refueling

A helicopter may be used to move personnel and equipment (e.g., pulling lines, assembling structures, etc.). Helicopters will set down in areas previously identified to receive temporary disturbance (e.g., pulling and tensioning sites, temporary work areas, construction yards, etc.). Travelers will be dropped on pulling and tensioning sites or other work areas previously described. Spill protection measures will be in place and all Federal Aviation Administration

regulations will be followed, and notification will be made to coordinate the air space with other possible helicopters or aircraft in the area (i.e., seeding operations, fire support, and Military Operation Areas).

If needed, additional temporary use sites within close proximity or on the right-of-way will be identified by the contractor and approved by the BLM for landing and refueling the helicopter. When and where required, prior to and during landing and refueling, a biological monitor will be dispatched to the site to clear sensitive species. Each fuel truck will be equipped with automatic shutoff valves and will carry spill kits; and in addition to the required preventive spill measures, a water truck may be required to spray the site to reduce dust. The CIC will also be dispatched to the fueling site when required. The contractor is responsible for cleanup of any materials released on the right-of-way. Any accidental spills will be handled according to the guidelines presented in Appendix A7 – Hazardous Materials Management Plan.

4.9. Transmission Line Construction Work Force and Schedule

It is anticipated that total construction time for the Project will be up to 3 years per transmission line. Work could occur up to 7 days per week and may include work during night hours, dependent upon construction scheduling, personnel availability, and local restrictions. The estimated number of workers and types of equipment required to construct the Project per transmission line are shown in Table A1-1. The actual quantity and type of equipment employed will depend on the specific contractor selected for the Project, but an estimated total of 206 workers would be required for the construction of each transmission line. Construction will occur in phases at different locations throughout the construction process, and in some cases at the same time at different locations. Regular field meetings will be held with the CIC and environmental monitors to coordinate construction activities with monitoring requirements.

Table A1-1. Estimated Personnel and Equipment for Transmission Line Construction

Activity	Equipment Type	Option A First (AC) Line		Option B or C Second (AC or DC) Line	
		Quantity of Equipment	Personnel (per line)	Quantity of Equipment	Personnel (per line)
Material Yard/ Receiving/Distribution	¾-ton Pickup	4	14	4	14
	10,000 lb. Forklift	2		2	
	50-ton Crane	2		2	
	Tractor Trailer (flatbed)	6		6	
	20-ton Boom Truck	3		3	
	100-ton Crane	0		0	
Survey (Construction Staking)	½-ton Pickup	2	4	2	4
	ATVs	4		4	
Soil Borings	¾-ton Pickup	2	6	2	6
	Drill Rig	2		2	
Right-of-Way Clearing	¾-ton Pickup	3	4	3	4
	Chainsaw	2		2	
	Hydro Axe	1		1	

Table A1-1. Estimated Personnel and Equipment for Transmission Line Construction

Activity	Equipment Type	Option A First (AC) Line		Option B or C Second (AC or DC) Line	
		Quantity of Equipment	Personnel (per line)	Quantity of Equipment	Personnel (per line)
Roads and Access	1-ton Pickup	2	6	2	6
	Cat D-6	1		1	
	Grader	1		1	
	Semi w/Dump Trailer	1		1	
	Water Truck	3		3	
Foundations (3 crews)	½-ton Pickup	3	36	3	36
	1-ton Pickup	6		6	
	Drill Rig	3		3	
	Loader/Backhoe	3		3	
	Boom Truck	3		3	
	Concrete Truck	6		6	
	Generator	3		3	
	Cat D-6	3		3	
Structure Assembly Lattice (3 crews)	½-ton Pickup	3	30	3	30
	1-ton Line Truck	3		3	
	20-ton Boom Truck	3		3	
	Air Compressor	3		3	
	30-ton R/T Crane	3		3	
Structure Assembly Tubular (1 crew)	½-ton Pickup	1	10	1	10
	1-ton Flatbed Truck	1		1	
	Air Compressor	1		1	
	30-ton R/T Crane	1		1	
Structure Erection (Lattice – 1 crew)	½-ton Pickup	1	10	1	10
	1-ton Flatbed Truck	1		1	
	200-ton Crane	2		2	
	20-ton Boom Truck	2		2	
	Air Compressor	1		1	
Structure Erection (Tubular – 1 crew)	½-ton Pickup	1	10	1	10
	1-ton Flatbed Truck	1		1	
	200-ton Crane	1		1	
	20-ton Boom Truck	1		1	
	Air Compressor	2		2	
Wire Pulling (Conductor, OHGW, OPGW)	1-ton Line Truck	2	20	2	20
	200-ton Crane	2		2	
	20-ton Boom Truck	2		2	
	Air Compressor	0		0	
	Cat D-8	3		3	
	Puller	2		2	

Table A1-1. Estimated Personnel and Equipment for Transmission Line Construction

Activity	Equipment Type	Option A First (AC) Line		Option B or C Second (AC or DC) Line	
		Quantity of Equipment	Personnel (per line)	Quantity of Equipment	Personnel (per line)
	Tensioner	2		2	
Conductor Clipping and Dead-ending (3 clip, 1 dead-end)	½-ton Pickup	4	32	4	32
	1-ton Line Truck	6		6	
	Bucket Truck/ Boom w/Basket	4		4	
Restoration	½-ton Pickup	2	4	2	4
	Tractor with Disc	1		1	
	Cat D-4	1		1	
	Hydro Seed Truck	1		1	
Contractor Management/ Compliance Monitors	½-ton Pickup	20	20	20	20
	ATV (Inspection)	2		2	
Total Personnel[1]			**206**		**206**

[1]Maximum total personnel required during the construction period, considering all tasks (actual personnel at any one time would be less). Multiple crews may be required depending on schedule requirements.

5. GENERAL SUBSTATION CONSTRUCTION

There will be substation construction activities at up to five locations for the Project. A summary of the substation locations, footprints, and major equipment to be installed is included in Section 3.1.11 of this POD. Anticipated layouts for the proposed substations are shown in Section 3, Figures 3-15 through 3-19 of this POD. The following discussion is an overview of the types of construction activities that will take place at the substations.

5.1. Access Roads

Permanent, all weather access roads are required at substation site locations to provide access for personnel, material deliveries, vehicles, trucks, heavy equipment, low-boy tractor trailer rigs (used for moving large transformers), and ongoing maintenance activities at the site. Substation access roads are normally well compacted, graded gravel roads a minimum of 24 feet in width (a maximum of 28 feet with ditches on each side included). All proposed substations with the exception of Pinal Central will require construction of new permanent access roads as a part of this Project.

5.2. Clearing and Grading

All vegetation within the fenced substation area will be required to be removed, as well as vegetation up to approximately 10 feet beyond the fence. This is required for personnel safety, due to grounding concerns and because of lower clearances to energized conductors within the substations as compared to transmission lines. These lower clearances are allowed by the NESC because the entire substation is fenced. An insulating layer on the surface of the substation is

required to protect personnel from high currents and voltages during fault conditions. Typically, vegetation is removed and a 4- to 6-inch layer of crushed rock is applied to the finished surface of the substation. The substation is then usually treated with a soil sterilizer (i.e., herbicide) to prevent vegetation growth, because the vegetation will degrade the insulating qualities of the crushed rock. Herbicides will only be applied in accordance with the requirements of Appendix B2 – Noxious Weed Management Plan of the Final POD. The entire substation area will be graded essentially flat, with just enough slope to provide for runoff of precipitation; and will be graded to use existing drainage patterns to the extent possible. In some cases, drainage structures, such as ditches, culverts, and sumps, may be required. Clearing and grading material will be disposed of in compliance with local ordinances. Material from offsite will be obtained at existing borrow or commercial sites and will be trucked to the substation using existing roads and the substation access road.

5.3. Grounding

A grounding system is required in each substation for detection of faults and for personnel safety. It typically consists of buried copper conductor arranged in a grid system and driven ground rods, typically 8 to 10 feet long. The ground rods and any equipment and structures are connected to the grounding conductor. The amount of conductor and length and number of ground rods required is calculated based on fault current and soil characteristics.

5.4. Fencing

Security fencing is installed around the entire perimeter of each new substation to protect sensitive equipment and prevent accidental contact with energized conductors by third parties. This fence is anticipated to be 8 feet high, topped with barbed wire and will be constructed of chain link with steel posts. All fencing should also be coated in an environmental color, representative of the surrounding landscape, to reduce visual impacts. Locked gates are installed at appropriate locations for authorized vehicle and personnel access.

5.5. Foundation Installation

Two types of foundations for supporting structures will be utilized for the Project; spread footings or drilled piers. Spread footings are placed by excavating the foundation area, placing forms and reinforced-steel and anchor bolts, and pouring concrete into the forms. After the foundation has been poured, the forms will be removed, and the surface of the foundation dressed. Pier foundations are placed in a hole generally made by a track-mounted auger. Reinforced-steel and anchor bolts are placed into the hole using a track-mounted crane. The portion of the foundation above ground will be formed. The portion below ground uses the undisturbed earth of the augured hole as the form. After the foundation has been poured, the forms will be removed, the excavation will be backfilled, and the surface of the foundation dressed. Equipment foundations for circuit breakers and transformers will be slab-on-grade type. These foundations are created by excavating the foundation area; placing forms, reinforced-steel, and anchor bolts (if required), and pouring concrete into the forms. After the foundations have been poured, the forms will be removed, and the surface of the foundation dressed. Where necessary, provision will be made in the design of the foundations to mitigate potential problems

due to frost. Reinforced-steel and anchor bolts will be transported to each site by truck, either as a prefabricated cage or loose pieces, which will then be fabricated into cages on the site. Concrete will be hauled to the site in concrete trucks; excavated material will be spread at the site or disposed of in accordance with local ordinances; and structures and equipment will be attached to the foundations by means of threaded anchor bolts embedded in the concrete. Some equipment such as transformers and reactors may not require anchor bolts.

5.6. Oil Containment

Some types of electrical equipment, such as transformers and some types of reactors and circuit breakers, are filled with an insulating mineral oil. Containment structures are required to prevent oil from this equipment from getting into the ground or water bodies in the event of a rupture or leak. These structures take many forms depending on site requirements, environmental conditions, and regulatory restrictions. The simplest type of oil containment is a pit of a calculated capacity, under the oil filled equipment that has an oil impervious liner. The pit is filled with rock to grade level. In the event of an oil leak or rupture, the oil captured in the containment pit is pumped into tanks or barrels and transported to a disposal facility. If required, more elaborate oil containment systems can be installed. This may take the form of an onsite or offsite storage tank and/or oil-water separator equipment, depending on site requirements.

5.7. Structure and Equipment Erection/Installation

Supporting steel structures are erected on concrete foundations as noted above. These are set with a track-mounted crane and attached to the foundation anchor bolts by means of a steel base plate. These structures will be used to support the energized conductors and certain types of equipment. This equipment is lifted onto the structure by means of a track-mounted crane and bolted to the structures; at which point electrical connections are made. Some equipment, such as transformers, reactors, and circuit breakers, are mounted directly to the foundations without supporting structures and set in place by means of a track-mounted crane. Some of this equipment requires assembly and testing on the pad; at which point electrical connections to the equipment are made.

5.8. Control Building Erection

One or more control buildings are required at each substation to house protective relays, control devices, battery banks for primary control power, and remote monitoring equipment. The size and construction of the building depends on individual substation requirements. Typically, the control building will be constructed of concrete block. Once the control house is erected, equipment is mounted and wired inside.

5.9. Conduit and Control Cable Installation

Most substation equipment requires low-voltage connections to protect relaying and control circuits. These circuits allow metering, protective functions, and control (both remote and local) of the power system. Connections are made from the control building to the equipment through

multi-conductor control cables installed in conduits and/or pre-cast concrete cable trench systems.

5.10. Landscaping and Construction Cleanup

The cleanup operation will be performed after construction activities are completed. All waste and scrap material will be removed from the site and deposited in local permitted landfills in accordance with local ordinances. Ruts and holes outside the substation fence due to construction activities will be filled and regraded. Revegetation and reclamation will be conducted as required. If landscaping is required by the permitting agency, landscaping will be completed with native, site-appropriate plant species preferably salvaged from the substation site during construction activities. Supplemental native and site-appropriate plants may be necessary for substation landscaping in some cases, as determined in coordination with the permitting agency. A permanent access road will be constructed to the new substation.

Appendix A2 – Flagging, Fencing, and Signage Plan

TABLE OF CONTENTS

1. Introduction A2-1
   1.1. Purpose A2-1
2. Demarcating Project Facilities A2-1
3. Environmental Exclusion Areas A2-2
   3.1. Flagging A2-2
   3.2. Fencing A2-3
   3.3. Signage A2-3
4. Installation, Monitoring, Maintenance, and Removal of Flagging, Fencing, and Signage A2-4

LIST OF TABLES

Table A2-1 . Flagging Plans A2-2
Table A2-2. Sign Standards for Project Features A2-3

This page intentionally left blank

1. INTRODUCTION

This Flagging, Fencing, and Signage Plan describes the methods that will be used in the field to delineate Project features and sensitive environmental resources areas and warnings during Project construction. These methods are intended to ensure that ground disturbance is limited to previously approved areas; ensure project personnel stay on approved access routes and within approved work areas; and establish Project notifications (i.e., warning signs, speed limit, and sensitive areas). The measures described in this plan are an integral part of the environmental compliance program for avoiding and minimizing impacts to sensitive resources.

1.1. Purpose

The purpose of this plan is to provide information on the field markings (i.e., flagging, staking, fencing, and signage) that will be used to identify approved Project work areas, as well as sensitive resource areas where construction is to be excluded. No federal, state, or local laws, rules, or regulations specifically address flagging and fencing protocols for construction projects. This plan serves as an informational guide on access restrictions and safety precautions to all individuals that will have access to the Project right-of-way. It will help to avoid adverse impacts to the environment, human health and safety, and property that could potentially result from the activities associated with the construction of the Project.

Several of the mitigation measures in the Project EIS (see Section 6 of the POD) require adequate field marking of sensitive resource areas to avoid or reduce impacts. Flagging or fencing requirements are included within several mitigation measures to help minimize the amount of ground disturbance and protect vegetative cover and habitat, water quality, cultural resources, and special-status species, and to minimize the spread of invasive weeds.

2. DEMARCATING PROJECT FACILITIES

Standard survey flags and stakes will be installed before the start of Project construction. Structure sites (e.g., tower locations, anchor points, reference points) will be marked by the construction contractor(s). Designated Project access roads, spur roads, parking areas, and pullout areas will be marked to facilitate travel to and from the right-of-way. Wire stringing/pulling sites and material yards will be demarcated, as necessary, to indicate the limits of the approved work area. The construction contractor(s) will stake the boundaries of the maximum area needed for work areas and will provide the dimensions to the CIC. If the delineated work areas exceed the approved dimensions for Project facilities (see Table 3-1 and Section 3.3 of this POD), the construction contractor(s) will coordinate with the CIC for approval, and consultation with the BLM and other agencies may be required.

Substation site locations and substation improvements will be delineated, and helicopter fly yards, wire stringing areas, and material yards will be demarcated to indicate the limits of the approved work area.

Table A2-1 provides standards that will be used for marking Project features needed for construction and features to be avoided.

Table A2-1. Flagging Plans		
Colors	**Meaning**	**What to do**
Yellow/Green	Avoidance Area – sensitive plant resource, noxious weeds, and/or sensitive environment areas (cultural, etc.)	Avoid these items/areas; do not drive vehicles or equipment near flagged items or within flagged areas
Pink	Proposed structure locations	Do not disturb survey stakes
Pink/White	Structure offsets	Do not disturb survey stakes
Blue/White	Temporary work areas, including pulling and tensioning, guard structure, and helicopter refueling sites	Do not drive vehicles/equipment or conduct activities outside of temporary use areas, unless authorized to do so
	Construction access points and roads (including drive and crush routes)	Verify that right of entry has been obtained before flagging for use
Many Colors	Cadastral survey points	Protect in place

3. ENVIRONMENTAL EXCLUSION AREAS

Signs, flags, and/or fencing will be used to delineate and protect sensitive environmental resources in the vicinity of construction activities. No paint or permanent discoloring agents will be applied to rocks or vegetation to indicate limits of survey or construction activity. A system of standardized and simplified exclusion markings will be used to reduce potential confusion during construction, and to minimize the risk of highlighting types of sensitive resources that could be targeted by vandals (e.g., if exclusions around archaeological sites were marked differently than those around sensitive natural resource areas, the sites would be at a higher risk of unauthorized artifact collecting or other disturbance). Exclusion areas will be set up to protect these areas, but the specifics of the sensitive environmental resource (i.e., biological, cultural, or paleontological resources) will not be disclosed to the construction contractor(s).

3.1. Flagging

Survey flagging (i.e., surveyor's ribbon tied to wooden stakes, metal posts, or vegetation) will typically be used to delineate the limits of work areas such as material yards, disturbance limits (i.e., boundaries of the right-of-way), wire stringing sites, access roads, etc., unless existing fencing or other features clearly indicate the limits of the area. Survey flagging may be used to demarcate sensitive resource locations situated a safe distance from planned construction activities, but generally will not be used to define resource exclusion areas close to planned construction activities, due to concerns about the visibility and stability of flagging during construction.

The BLM Authorized Officer or CIC, as needed, will determine whether flagging or fencing (as described below) is the appropriate protective device for a given location. Flagging color will conform to the requirements of Table A2-1.

3.2. Fencing

To delineate the limits of construction near sensitive resources that require a high level of protection from inadvertent project disturbance, a combination of one or more of the following fencing materials will be installed by the construction contractor(s):

- Rope (0.25-inch diameter in yellow or orange coloring)
- Plastic or fabric tape
- Safety fencing (plastic orange or red mesh at least 24 inches wide and at least 18 inches off the ground, to address travel by small animals)

Roping with periodic marking by exclusionary signs or lengths of tape is a highly visible and effective exclusion devise. Roping, tape, and safety fence will be installed using metal posts for increased durability. In most cases, it is anticipated that the materials will be installed at the margins of the sensitive resource (including any required buffers), rather than at the edge of the work area. If a buffer zone encroaches into the work area, only the portions that overlap with the work area will be delineated and signed as an exclusion zone.

3.3. Signage

Signs will be used to help identify Project features, such as access roads and certain Project facilities. Signs will be a minimum of 8.5 inches by 11 inches on laminated (7 mil or greater) white/color paper for protection from the elements. Signs will be installed on metal posts, wooden stakes, or attached to exclusion fencing/roping, as appropriate. Background colors will vary to enhance sign recognition from a distance. Table A2-2 provides some standards for marking Project features that will be needed during construction. Signs for sensitive resource areas will be oriented for visibility from both directions of likely travel. Temporary warning signage will be employed to alert the public of blasting, as required (see Appendix A5 – Blasting Plan Methodology).

Table A2-2. Sign Standards for Project Features

Feature	Feature Color	Sign Text	Comments
Speed limit signs	White	Speed Limit 20-25 MPH Strictly Enforced	To be located at various locations along the approved Project access road.
Direction sign	White	Structure 95 Ahead On Line	To be located along the approved Project access road and points of intersection, to provide direction to current structures being constructed.
Cultural sites, special-status wildlife areas, wetlands, drainages, and invasive weed infestations adjacent to construction areas.	Yellow	Sensitive Resource Area Keep Out	Signs to be installed, as needed, in addition to exclusion fencing and flagging.

Table A2-2. Sign Standards for Project Features			
Feature	**Feature Color**	**Sign Text**	**Comments**
Areas temporarily closed to construction due to special-status wildlife breeding, nesting, or seasonal-use range.	Yellow	Sensitive Resource Area Keep Out	Signs to be installed, as needed, at logical points of entry (i.e., access road and/or centerline travel route) to excluded zone.
Invasive weed cleaning stations	Yellow	Weed Cleaning Station	Signs to be installed at logical points of entry.
Top soil stock pilling	Yellow	Top Soil Do Not Disturb	Sign to be placed at the pile, clearly visible for work area.
Unapproved access road, closed roads	Yellow	Do Not Enter	To be located at juncture of approved access roads.
Blasting areas	Orange	Caution – Blasting Zone Ahead	Located at appropriate points to warn the public of blasting activities.
MPH – miles per hour			

4. INSTALLATION, MONITORING, MAINTENANCE, AND REMOVAL OF FLAGGING, FENCING, AND SIGNAGE

The success of this Flagging, Fencing, and Signage Plan hinges on the proper installation, monitoring, and maintenance of protective devices. The construction contractor(s) or his designated surveying contractor(s) will be responsible for the installation and maintenance of the field marking of construction features (e.g., towers, work area boundaries, anchors, substations). These markings will be installed in advance of construction activities in the area, maintained during the course of construction, as necessary, and removed during cleanup activities.

Environmental exclusions, signs, flags, and fencing for general inventory purposes and to denote exclusionary zones will be installed by Flagging and Fencing Crew(s), along with the assistance of appropriate resource specialists (e.g., botanists, biologists, paleontologists, archaeologists) as necessary. These environmental exclusions will be installed prior to the start of construction within a work area. Resources Specialists will be consulted if there is uncertainty as to the type or location of needed exclusion devices for botanical, wildlife, wetlands, springs, streams, or archaeological sites.

Routine monitoring by the CIC will include an ongoing assessment of the need for replacement or repair of exclusionary flagging or fencing. Maintenance needs related to exclusionary devices will either be corrected at the time of observation by the CIC or Resource Specialist, or will be documented as a future need. If maintenance of an exclusionary device is needed within an active construction area, corrective action will be taken within 1 workday. Maintenance of signs, flagging, and fencing within dormant areas will be implemented as necessary. Upon completion of construction activities, and following cleanup and/or reclamation, all staking and flagging will be removed and disposed of by the construction contractor(s).

Appendix A3 – Transportation Management Plan

TABLE OF CONTENTS

1. Introduction A3-1
    1.1. Purpose A3-1
2. Regulatory A3-1
3. Traffic Management Practices A3-1
4. Types of Right-of-Way Access A3-2
5. Transportation Mitigation Measures A3-4
    5.1. Standard Mitigation Measures A3-4
    5.2. Selective Mitigation Measures A3-5
    5.3. Vehicle Operation and Other Mitigation Measures A3-6

This page intentionally left blank

1. INTRODUCTION

This Transportation Management Plan addresses regulatory compliance, traffic management practices, levels of right-of-way access and mitigation measures to help reduce impacts related to transportation and the construction of temporary and long-term access within the vicinity of the Project.

1.1. Purpose

The purpose of this plan is to provide the BLM and other public agencies, the CIC, and the construction contractor(s) with a description of the type of access associated with the construction, operation, and maintenance of this Project, and make evident the potential impacts that could be created by construction and operation of the Project. The goal of this plan is to ensure that impacts from construction of the transmission line and any associated access are kept to a minimum through the use of management practices and mitigation measures described throughout this appendix. These practices and measures are intended to mitigate the effects of transportation on environmental resources, roads, traffic, travel, and road safety.

2. REGULATORY

A number of agencies have jurisdiction over the transportation-related components of the Project. These include the BLM; Arizona Department of Transportation (ADOT); New Mexico Department of Transportation (NMDOT); local law enforcement and road departments in Pima, Pinal, Graham, Greenlee, Cochise, Hidalgo, Luna, Torrance, Lincoln, Socorro, Sierra, and Grant counties; and the Arizona and New Mexico Highway Patrol. Encroachment permit applications will need to be filed with appropriate road agencies for those areas where the transmission line crosses public roads (e.g., I-10, I-25, US 380, US 54, and SR 87) prior to construction.

Other permits and approvals not directly related to transportation could affect the construction, use, and/or maintenance of roads in certain areas. Persons responsible for Project transportation activities must be familiar with all relevant sections of this POD.

3. TRAFFIC MANAGEMENT PRACTICES

Ground travel will be the primary means of transporting construction and maintenance crews and equipment during Project construction; helicopters will be used as deemed necessary. All vehicles will obey jurisdictional traffic speed regulations and the posted speed limit. Speeds along access roads and spur roads within the right-of-way may be limited to 15 miles per hour (mph) in some areas to prevent excessive amounts of construction related dust (see Appendix A5 – Erosion, Dust Control, and Air Quality Plan).

Before construction, authorized access routes will be clearly marked in the field with signs or flagging (see Appendix A2 – Flagging, Fencing, and Signage Plan). The construction contractor(s) will review the location of proposed access and will be responsible for ensuring that construction travel is limited to designated areas that clearly identify the limits of disturbance.

All field personnel will attend an environmental training program. Through this program, field personnel will be instructed to use only approved access roads, drive within the delineated road limits, and obey jurisdictional and posted speed limits to minimize potential impacts to biological, paleontological, and cultural resources.

Every effort will be made to minimize the effects of the Project construction activities on public transportation and to provide for public safety. The construction contractor(s), CIC, and all environmental monitors will maintain a communications network that consists of one or both of the following devices: two-way radios and/or cellular phones. This will allow for coordination of equipment traffic along existing access roads, such that public safety and traffic impacts are minimized.

In general, the number of construction vehicles needed for the Project is not expected to substantially increase traffic volumes. Similarly, road and lane closures are anticipated to be minimal, and will most likely occur during conductor stringing activities or during blasting. If road and lane closures are needed (e.g., to pull line across I-10, I-25, US 380, US 54, and SR 87 or local roads) the appropriate regulatory agencies, affected parties, and emergency service providers will be notified in advance of the anticipated closure.

Although construction traffic is not expected to disrupt access to residences along the right-of-way, adjacent landowners will be notified of the construction schedule (where appropriate). Signs will be posted in the Project area to notify landowners and others of the construction activity (see Appendix A2 – Flagging, Fencing, and Signage Plan). Construction crews will park only in designated areas and will be shuttled to the appropriate work sites, if necessary.

In addition to minimizing the impacts associated with ground travel, the construction contractor(s) will coordinate construction activities with jurisdictional utilities and the Federal Aviation Administration, as needed.

4. TYPES OF RIGHT-OF-WAY ACCESS

Access to the Project transmission line right-of-way and other areas needed for construction (e.g., staging areas) will be needed for Project construction, operation, and maintenance activities. Listed below are five types of access that will be used for this transmission line. The types of access will also be illustrated in the Final POD, Volume II Map Sets 1 and 2.

- **Existing Paved Roads:** These roads are typically highways and state routes (e.g., I-10, I-25, US 380, US 54, and SR 87) and will be used for travel to existing and new dirt roads to access the right-of-way. No staking will be required for this type of access.

- **Existing Unpaved Roads Not Requiring Improvements:** These are existing dirt or gravel roads that generally will not require any improvements to support construction vehicles to access the right-of-way. Regular maintenance for construction (regarding wash-out areas, graveling, and installation of gravel pads for controlling trackout) is allowed in these areas. The outer edge of existing dirt access roads that have been approved for the Project will be staked. If it is determined that one of these roads does need improvement, the CIC must be notified in writing and the necessary environmental inspections (biological, cultural, paleontological) conducted before any improvements

can be initiated (see POD Section 4.4 – Deviations During Construction, and Appendix A9 – Environmental Compliance Management Plan). Activities considered as improvements include road widening, road straightening, and installation of culverts or temporary bridges. It is important to note that some requests may require additional review and approval periods (more than 30 days) if they involve other regulatory agencies.

- **Existing Unpaved Roads Requiring Improvements:** These are existing dirt or gravel roads that may require improvements to support construction vehicles to access the right-of-way, and may be widened to 20 feet, with 2-foot berms on either side (maximum 24 feet wide). Improvements to these existing roads may include mowing, blading, realignment, widening cut/fill, tree removal, and bridge/culvert construction. Improvements to these roads may require restoration to preconstruction condition as determined by the BLM Authorized Officer (see Appendix F – Right-of-Way Preparation, Reclamation, and Monitoring Framework Plan). Approved access roads that require improvement will be staked to a maximum width of 24 feet. In rough terrain conditions, improved roads may require increased grading for access along steep slopes (side-hill roads) and could likely exceed a 24-foot width, depending on the degree of slope and the amount of displaced soil.

- **New Access Roads:** These roads will be constructed where existing access is not sufficient to access the right-of-way and will be generally 20 feet wide with 2-foot berms on either side. In steep or rugged terrain, disturbance for new roads may be greater than the 20-foot-wide travel surface because of necessary cut and fill. Construction of these new access roads may include mowing, blading, tree removal, and bridge/culvert construction. These new roads will require restoration to preconstruction condition, if they are not identified for future operation and maintenance of the transmission line. Methods of clearing for new roads and road restoration are presented in Appendix F – Right-of-Way Preparation, Reclamation, and Monitoring Framework Plan. Approved new access roads will be staked to a standard width of 24 feet. In rough terrain conditions, new roads may require increased grading for access along steep slopes (side-hill roads) and would likely exceed a 24-foot width, depending on the degree of slope and the amount of displaced soil.

- **Overland Access:** In areas where no grading will be needed to access work areas, the construction contractor(s) will use overland access to the greatest extent possible. Overland access will consist of drive and crush and/or clear and cut travel. Drive and crush is vehicular travel to access a site without significantly modifying the landscape. Vegetation is crushed, but not cropped. Soil is compacted, but no surface soil is removed. Even though vegetation may be damaged or destroyed, this creates vertical mulch upon the surface soil and leaves the seed bank in place. Crushed vegetation will likely resprout after temporary use is stopped. Clear and cut is considered as the "brushing off" (removal) of all vegetation, in order to improve or provide suitable access for equipment. All vegetation is removed using above-ground cutting methods that leave the root crown intact. Soils are compacted, but no surface soil is removed. Prior to work beginning, overland access routes will be staked to a maximum width of 24 feet.

The Proponent has identified access that requires improvements inside and out of the right-of-way. If construction of additional access not identified on the maps to be included in the Final POD Volume II is needed, proper approvals will be acquired through the procedures outlined in the POD (see Section 4.4 – Deviations During Construction, and Appendix A9 – Environmental Compliance Management Plan).

5. TRANSPORTATION MITIGATION MEASURES

This section describes practices intended to mitigate potential environmental, traffic, and traffic safety-related impacts associated with access to and from the transmission line.

5.1. Standard Mitigation Measures

Following are standard and selective mitigation measures to reduce potential impacts resulting from ground disturbance and increased levels of public access associated with the construction and operation of the transmission line.

Standard mitigation measures are to be applied to all affected Project areas to help reduce potential access-related impacts. Listed below are transportation-related standard mitigation measures that are to be implemented by the Contractor during construction of the Project facilities:

- Standard Mitigation Measure 2 – All vehicle movement outside the right-of-way would typically be restricted to designated access, Contractor acquired access, or public roads.

- Standard Mitigation Measure 3 – The boundary of construction activities would normally be predetermined, with activity restricted to and confined within those limits. No paint or permanent discoloring agents would be applied to rocks or vegetation to indicate survey or construction activity limits.

- Standard Mitigation Measure 4 – The alignment of any new access roads or overland route will follow the designated area's landform contours where possible, provided that such alignment does not additionally impact resource values. This will minimize ground disturbance and/or reduce scarring (visual contrast).

- Standard Mitigation Measure 5 – In construction areas where grading is not required, vegetation would be left in place wherever possible, and original contour would be maintained to avoid excessive root damage and allow for regrowth. All existing roads would be left in a condition equal to or better than their condition prior to the construction of the transmission line(s), as determined by the appropriate land-managing agency.

- Standard Mitigation Measure 6 – To limit new disturbance, existing access roads in the Project area would be used to the extent practicable, provided that doing so does not additionally impact resource values.

- Standard Mitigation Measure 18 – Roads would be built as near as possible at right angles to the streams and washes. Culverts or temporary bridges would be installed where

necessary. All construction and maintenance activities shall be conducted in a manner that would minimize disturbance to vegetation, drainage channels, and intermittent or perennial stream banks.

- Standard Mitigation Measure 20 – All requirements of those entities having jurisdiction over air quality matters will be adhered to, any necessary dust control plans will be developed, and permits for construction activities will be obtained. Open burning of construction trash will not be allowed unless permitted by appropriate authorities.

- Standard Mitigation Measure 21 – Fences and gates would be repaired or replaced to their original predisturbed condition, as required by the landowner or the BLM Authorized Officer if they are damaged or destroyed by construction activities. New temporary and/or permanent gates will be installed only with the permission of the landowner or the BLM. Temporary gates not required for postconstruction access control (see Selective Mitigation Measure 6 in Section 6 of this POD) will be removed following construction completion and the area restored in accordance with the POD.

5.2. Selective Mitigation Measures

Selectively recommended mitigation measures to be applied on a site-specific basis to reduce access and transportation-related impacts include the following, to be implemented by the construction contractor(s) (see Final POD Volume II):

- Selective Mitigation Measure 1 – No widening or upgrading of existing access roads will be undertaken in the area of construction and operation, except for repairs necessary to make roads passable, where soils and vegetation are very sensitive to disturbance, or where existing archaeological sites are present.

- Selective Mitigation Measure 2 – There will be no blading of new access roads in select areas of construction and operation. Existing crossings will be utilized at perennial streams, designated recreational trails, and irrigation channels. Offroad or cross-country access routes will be used for construction and maintenance in select areas. This will minimize ground disturbance impacts. These access routes must be flagged with an easily seen marker, and the route must be approved, in advance of use, by the BLM Authorized Officer or landowner.

- Selective Mitigation Measure 3 – Overland access (i.e., drive and crush or cut and clear) would be used to the greatest extent possible in areas where no grading would be needed to access work areas. Drive and crush is vehicular travel to access a site without significantly modifying the landscape. Vegetation is crushed, but not cropped. Soil is compacted, but no surface soil is removed. Cut and clear is considered as the brushing off (removal) of all vegetation to improve or provide suitable access for equipment. All vegetation is removed using above-ground cutting methods that leave the root crown intact.

- Selective Mitigation Measure 4 – All new access roads not required for maintenance would be permanently closed using the most effective and least environmentally

damaging methods appropriate to that area (e.g., stock piling and replacing topsoil, or rock replacement), with concurrence of the landowner or appropriate land management agency. This would limit new or improved accessibility into the area.

5.3. Vehicle Operation and Other Mitigation Measures

In addition to mitigation measures pertaining to traffic management and the construction of access roads, the following measures also will be implemented in association with the operation of vehicles during construction:

- All vehicles will be equipped with approved spark arrestors and appropriate fire suppression equipment (see Appendix A4 – Fire Protection Plan).
- All vehicle undercarriages will be washed to prevent the spread of noxious weeds prior to entering the Project site (see Appendix B2 – Noxious Weed Management Plan).
- All vehicles are to maintain current registration and will be maintained in good working condition, including emissions control devices (see Appendix A6 – Erosion, Dust Control, and Air Quality Plan).
- Vehicle refueling and servicing activities will be performed in designated construction zones located more than 100 feet from wetlands and streams (see Appendix A7 – Hazardous Materials Management Plan).
- The construction contractor(s) must secure all construction related equipment and storage yards to prevent unauthorized use of equipment that could result in avoidable environmental impacts.
- The public and agencies will be informed regarding construction activity in the area as determined by the BLM Authorized Officer.

Appendix A4 – Fire Protection Plan

TABLE OF CONTENTS

2. Introduction A4-1
2.1. Purpose A4-1
2.2. Regulatory Compliance A4-1
3. Responsibilities A4-1
3.1. Bureau of Land Management A4-1
3.2. Construction Contractor(s) A4-1
3.3. Compliance Inspection Contractor A4-3
3.4. Notification A4-3
4. Fire Prevention Measures A4-3
4.1. Standard Mitigation Measures A4-3
4.2. Selective Mitigation Measures A4-4
4.3. Other Fire Prevention Measures A4-4
5. Activity-Related Precautions A4-6
5.1. Burning (Not Allowed) A4-6
5.2. Blasting A4-6
5.3. Welding A4-6
5.4. Spark Arrestors A4-6
5.5. Smoking A4-7
5.6. Warning Devices A4-7
5.7. Parking and Vehicle Storage Areas A4-7
5.8. Signage A4-7
5.9. Power Saws A4-7
5.10. Equipment Refueling A4-8
5.11. Access A4-8
6. Minimum Fire Prevention and Suppression Equipment Required A4-8
7. In Case of Fire – Initial Response and Emergency Contacts A4-9
8. PostFire Rehabilitation Strategies A4-9

LIST OF TABLES

Table A4-1. Emergency Fire Contacts A4-3

This page intentionally left blank

2. INTRODUCTION

This plan details measures that should be implemented to: (1) reduce the risk of starting a fire and (2) suppress a fire, in the event one does occur, within the construction area during Project construction, operation, and maintenance.

2.1. Purpose

The risk of fire danger during construction of a transmission line is related largely to the use of vehicles and other motorized equipment operating off roadways, the handling and use of explosive materials and flammable liquids, and welding.

The purpose of this plan is to outline responsibilities, notification procedures, fire prevention measures and precautions, fire suppression equipment, initial response procedures, and postfire rehabilitation strategies related to the Project. The goal is to minimize risk of project-related fires and, in case of fire, provide for immediate suppression within the construction area. Other plans containing information related to fire protection include: Appendix A5 – Blasting Plan Methodology; Appendix A7 – Hazardous Materials Management Plan; and Appendix A8 – Emergency Preparedness and Response Plan.

2.2. Regulatory Compliance

The Project will be subject to state, county, and federally enforced laws, ordinances, rules, and regulations that pertain to fire prevention and suppression activities. Key regulatory agencies include the BLM, Arizona State Forestry Division, New Mexico State Forestry Division, and local fire protection agencies in Arizona and New Mexico.

3. RESPONSIBILITIES

3.1. Bureau of Land Management

The BLM Fire Management Officer (FMO) will oversee all fire control activities in his/her administrative unit. The FMO will discuss fire protection stipulations at the Project kickoff meeting, which will be attended by the BLM Authorized Officer, CIC, construction contractor(s), and environmental monitors.

When fire suppression is the responsibility of the BLM, current BLM standard firefighting rates for labor will be used. Equipment will be paid at negotiated rates established in BLM rental agreement contracts for the particular working season. The BLM may call on the construction contractor(s)'s workers and equipment in emergencies for project-related fires outside the Project area. Payment will be made in a similar manner to that above.

3.2. Construction Contractor(s)

It will be the responsibility of the construction contractor(s) to notify the BLM when a project-related fire occurs within or adjacent to the construction area. The construction contractor(s) will

be responsible for any fire started, in or out of the Project area, by its employees or operations during construction; as well as for fire suppression and rehabilitation. The construction contractor(s) will take aggressive action to prevent and suppress fires on and adjacent to the Project area, and will utilize his/her workers and equipment for fighting fires within the Project area.

All federal, state, and county laws, ordinances, rules, and regulations that pertain to prevention, presuppression, and suppression of fires will be strictly adhered to by the construction contractor(s). All personnel will be advised of their responsibilities under the applicable fire laws and regulations.

Costs involved with contractor-caused fires will be charged to the construction contractor(s). There will be no extension of time for construction based on delays caused by Construction Contractor-related fires. Specific construction-related activities and safety measures will be implemented during construction of the transmission line, in order to prevent fires and to ensure quick response and suppression in the event a fire occurs as specified in this Fire Protection Plan.

3.2.1. Construction Crew

- If a fire starts in the Project area, the construction crew will initiate fire suppression activities on the Project until relieved by the appropriate fire authorities and notify the construction contractor(s)'s Fire Marshall (see below) when a construction fire occurs in the area.
- Available Project crews will be immediately alerted when a Contractor-caused fire occurs in the Project area. Project tools, equipment, and trained workers will be sent immediately to control the fire.

3.2.2. Construction Contractor(s), Designated Fire Marshall

The construction contractor(s) will designate a Fire Marshall that will be responsible for the following:

- Conducting regular inspections of tools, equipment, and first aid kits for completeness
- Conducting regular inspections of storage areas and practices for handling flammable fuels to confirm compliance with applicable laws and regulations
- Posting smoking and fire rules at centrally visible locations
- Coordinating initial response to contractor-caused fires within the Project areas
- Accompanying the CIC on fire inspections of the Project areas
- Ensuring that all construction workers and subcontractors are aware of the contents of this Fire Prevention Plan
- Remaining on duty when construction activity is in progress, and any additional periods where fire safety is an issue
- Reporting all wildfires in accordance with the notification procedures described in the notification section (below)
- If a fire starts in the Project area, initiating and implementing fire suppression activities until relieved by the appropriate fire agencies; fire suppression personnel and equipment, including water trucks, will be dispatched within 15 minutes from the time a fire is reported

- Issuing current fire potential and fire safety warnings

3.3. Compliance Inspection Contractor

The CIC and the Fire Marshall will accompany the BLM FMO on fire inspections and take corrective action when notified that fire protection requirements are not in compliance. The CIC will notify the construction contractor(s) to stop or reduce construction activities that pose a significant fire hazard until appropriate safeguards are taken.

3.4. Notification

The construction contractor(s)'s Fire Marshall will notify the CIC, who will immediately notify the BLM Authorized Officer and the BLM's Safford, Tucson, Las Cruces, Socorro, or Roswell FMOs, if a fire is started in the Project area during construction. During operation and maintenance activities, the Project Proponent's maintenance crews, or contract crews, will be responsible for the immediate notification if a fire is started in the Project area. The construction contractor(s) and the Project Proponent will have notification telephone numbers readily available for all employees in case of fire, and will update the following emergency contact list (Table A4-1) with any changes prior to construction or maintenance within the Project area.

Table A4-1. Emergency Fire Contacts

Call 911 First	
New Mexico State Forestry Division Fire Program Managers: Socorro – (575) 835-9359 Capitan District Office – (575) 354-2231 **Arizona State Forestry Division** Tucson – 520-628-5480 Bureau of Land Management Fire Management Officer : Gila District – (928) 348-4508 Phoenix District – (623) 580-5578 Las Cruces – (575) 525-4305 Socorro – (575) 838-1291 Roswell – (575) 627-0314	**Bureau of Land Management** Fire Calls: 911 Southwest Coordination Center Arizona – (800) 309-7081 Alamogordo – (575) 437-0778 or 1 (877) 695-1663 Silver City – (800) 538-1644 Wildfire Reporting: call Southwest Coordination Center **U.S. Forest Service** Fire Calls: call Southwest Coordination Center

4. FIRE PREVENTION MEASURES

The following fire prevention measures will be implemented at all times by the construction contractor(s) during construction, operation, and maintenance of the Project:

4.1. Standard Mitigation Measures

- Standard Mitigation Measure 2 – All vehicle movement outside the right-of-way would typically be restricted to predesignated access, contractor acquired access, or public roads.

- Standard Mitigation Measure 3 – The boundary of construction activities would normally be predetermined, with activity restricted to and confined within those limits. No paint or permanent discoloring agents would be applied to rocks or vegetation to indicate survey or construction activity limits.

- Standard Mitigation Measure 20 – All requirements of those entities having jurisdiction over air quality matters will be adhered to, any necessary dust control plans will be developed, and permits for construction activities will be obtained. Open burning of construction trash will not be allowed unless permitted by appropriate authorities.

- Standard Mitigation Measure 23 – During operation of the transmission line(s), the right-of-way would be maintained free of nonbiodegradable debris. Slash will be left in place or disposed of in accordance with requirements of the land owner or management agency.

4.2. Selective Mitigation Measures

- Selective Mitigation Measure 4 – All new access roads not required for maintenance would be permanently closed using the most effective and least environmentally damaging methods appropriate to that area (e.g., stock piling and replacing topsoil, or rock replacement), with concurrence of the landowner or appropriate land management agency. This would limit new or improved accessibility into the area.

- Selective Mitigation Measure 6 – To minimize disturbance to sensitive habitats or resources, access roads required for operation and maintenance purposes would be gated or otherwise blocked from public access.

4.3. Other Fire Prevention Measures

- Smoke only in approved areas. No smoking will be allowed while operating equipment or while walking or working in areas with vegetation.

- In areas where smoking is allowed, completely extinguish all burning tobacco and matches and discard them in ash trays, not on the ground.

- Instruct all field personnel about emergency response for fire events.

- Clear away all flammable material for a minimum of 10 feet, including snags (fallen or standing dead trees) from areas of operation where a spark, fire, or flame could be generated.

- If a fire does start by accident, immediate steps will be taken to extinguish it (if it is safe to do so) using available fire suppression equipment and techniques taught at field crew emergency response training that will be provided by the construction contractor(s) or the Project Proponent.

- The Proponent or its contractors would notify the BLM or U.S. Forest Service (USFS) of any fires and comply with all rules and regulations administered by the BLM and/or

USFS concerning the use, prevention, and suppression of fires on federal lands, including any fire prevention orders in effect at the time of the permitted activity. The holder or its contractors may be held liable for the cost of fire suppression, stabilization, and rehabilitation. In the event of a fire, personal safety would be the first priority of the holder or its contractors. The holder or its contractors would:

- Operate all internal and external combustion engines (including off-highway vehicles, chainsaws, generators, heavy equipment, etc.) with a qualified spark arrestor. Qualified spark arrestors will be in a maintained and nonmodified condition and meet U.S. Department of Agriculture Forest Service Standard 5100-1a, or the Society of Automotive Engineers Recommended Practices J335 or J350 (see 43 Code of Federal Regulations [CFR] §8343.1).
- Carry shovels, water, and fire extinguishers on all equipment and vehicles. Equipment will carry extinguishers ABC-rated 10-pound minimum, and vehicles will carry ABC-rated 2.5-pound minimum. If a fire spreads beyond the suppression capability of workers with these tools, all will stop fire suppression action and leave the area immediately via pre-identified escape routes.
- Initiate fire suppression actions in the work area to prevent fire spreading to or on federally administered lands. If fire ignitions cannot be prevented or contained immediately, or it may be foreseeable to exceed the immediate capability of workers, the operation must be modified or discontinued. No risk of ignition or reignition will exist upon leaving the operation area.
- Notify the appropriate agency (see Table A4-1) or 911 immediately of the location and status of any escaped fire.
- Prior to any operation involving potential sources of fire ignition from vehicles, equipment, or other means, review weather forecasts and potential fire danger. Prevention measures to be taken each workday will be included in the specific job briefing. Consideration for additional mitigation or discontinuing the operation must be given in periods of extreme wind and dryness.
- Operate all vehicles on designated roads or park in areas where vegetation is less than 8 inches tall. Vehicles, including the undercarriages, will be cleared of vegetation accumulations and checked periodically to ensure no buildup of flammable vegetation.
- Operate welding, grinding, or cutting activities in areas cleared of vegetation within range of the sparks for that particular action. A spark shield adequate for the sparks may be used to prevent sparks from carrying. A spotter equipped with a round-nose shovel and two ABC-rated 5-pound fire extinguishers and a 5-gallon backpack water pump is required to watch for ignitions during, and 1 hour after, the activity. Water may be used to wet down surrounding vegetation but does not take the place of an adequately cleared area and spark shield.

5. ACTIVITY-RELATED PRECAUTIONS

5.1. Burning (Not Allowed)

No burning activities, campfires, or barbecues will be allowed on the transmission line right-of-way, at material yards, substations, on access roads, or in any other Project construction areas.

5.2. Blasting

No blasting will be performed without the notification of the CIC and the Fire Marshal. Blasting operations will follow the guidelines described in the Blasting Plan Methodology (see Appendix A5). The Blasting Contractor's vehicle will be equipped with adequate fire suppression equipment (see Section 6, below).

5.3. Welding

The construction contractor(s)'s Construction Manager must approve any welding or cutting of power line structures or their component parts. Approved welding or cutting activities will only be performed in areas cleared of vegetation a minimum of 10 feet around the area. Welding or cutting activities will stop 1 hour before all fire response personnel leave a construction area, to reduce the possibility of welding activities smoldering and starting a fire. At least one person will be designated as a "spotter" to watch for ignitions while equipped with suppression tools including fire extinguishers, a shovel, and a backpack water pump. The "spotter" will not be the same person who is engaged in welding, cutting, grinding, or drilling. The "spotter" will remain on scene for at least 1 hour after the work has been completed to ensure no fire risk exists. In addition, these activities will stop 1 hour before all fire suppression personnel leave a construction area, to reduce the possibility of smoldering to ignite a fire. Welder vehicles will be equipped with fire suppression equipment (see Section 6, below).

5.4. Spark Arrestors

All equipment assigned to the Project will be inspected and approved. Internal combustion engines (stationary or mobile) will be equipped with spark arrestors that meet agency standards, and for which the following guidelines will apply:

- light trucks and cars with factory installed (type) mufflers (in good condition) may be used on roads where the roadway is cleared of all vegetation
- on roads where vegetation exists, spark arrestors will be used
- spark arrestors will be in good working order
- vehicles equipped with catalytic converters may represent potential fire hazards and will be parked in areas cleared of vegetation
- if required, flues used in extra work areas will be equipped with spark arrestors in good working order and meet agency standards

5.5. Smoking

Smoking signs and fire rules regarding the Project will be posted on the Project bulletin board at the construction contractor(s)'s field office, at all show-up locations, and on all portable toilet doors during the fire season (to be determined by the BLM Authorized Officer). The construction contractor(s) is responsible for and will require supervisory personnel to enforce all posted rules; will prohibit smoking except in designated areas approved by the BLM; and will prohibit smoking during any season while operating equipment, walking, or working in areas of vegetation.

5.6. Warning Devices

The use of torches, fuses, highway flares, or other warning devices with open flames will be prohibited. The construction contractor(s) will use only electric or battery-operated warning devices within the Project area.

5.7. Parking and Vehicle Storage Areas

Equipment parking areas and small stationary engine sites will be cleared of all flammable materials as determined necessary by the BLM Authorized Officer. Gas and oil storage areas will be cleared of all flammable material for a distance of 100 feet, with "NO SMOKING" signs posted throughout the area. All used and discarded oil filters and oily rags or other waste will be disposed of in an approved landfill. Glass jugs or bottles will not be used as containers for gasoline or other flammable materials.

5.8. Signage

"NO SMOKING" signs and fire rules will be posted at material yards and key construction sites during the fire season, as determined by the BLM.

5.9. Power Saws

All gasoline powered saws will be provided with approved spark arrestors/mufflers. Gasoline powered chain saws will be maintained in proper working condition throughout their assignment to the Project. In addition, chain saws will comply with the following requirements:

- Arrestors/mufflers will contain a 0.023-inch mesh, stainless steel screen.
- During the period of use, the operator will have one long-handled, round point, size 0 shovel that will be maintained in proper working condition; the operator will also carry an approved belt carrying-type fire extinguisher.
- Refueling will be done in an area that has been cleared of flammable materials; power saws will be moved at least 10 feet from the place of refueling before starting (all gas will be carried in approved metal safety containers only).

5.10. Equipment Refueling

Fuel trucks will have at a minimum a 35-pound fire extinguisher charged with necessary chemicals to control electrical and fuel fires. Helicopter fuel trucks will be grounded to the helicopter during refueling.

5.11. Access

The construction contractor(s) will provide continuous access to roads for emergency vehicles during construction. The access roads could have the potential to be used as fire breaks, to help in fire suppression.

6. MINIMUM FIRE PREVENTION AND SUPPRESSION EQUIPMENT REQUIRED

The following fire prevention and suppression equipment will be readily available and maintained in proper working condition (per OSHA publication 3080) at all times during Project construction.

In all motorized vehicles in each active construction area:

- one long handled round point shovel
- one ax or Pulaski fire tool
- one 5-pound ABC Dry Chemical Fire Extinguisher
- one 5-gallon water backpack (or other approved container) full of water or other extinguishing solution
- hardhat, work gloves, and eye protection.

In addition to the fire suppression equipment required in motorized vehicles, construction work sites shall comply with the following:

- Power saws, if required for construction, equipped with an approved spark arrestor and accompanied by one 5-pound ABC dry chemical fire extinguisher and a long handled, round point shovel when used away from a vehicle (see Section 5.9, above).
- Fuel service trucks shall contain one 35-pound capacity fire extinguisher charged with the necessary chemicals to control electrical and fuel fires.
- Wood cutting, welding, or other construction work sites that have a higher risk of starting fires shall have at least two long handled round point shovels and two 5-pound ABC dry chemical fire extinguishers available onsite.
- Every construction work site shall have at least one radio and/or cellular/satellite telephone to contact fire suppression agencies or Project management.
- Every at-risk work site shall include backpumps filled with water (2 at each wood cutting site, 1 at each welding site, and 2 at each tower installation or construction site, or any other at-risk activity site).

During periods of heightened fire danger, the following equipment shall be available in the construction area to aid in response to a fire situation, or stationed near high-risk construction work sites:

- One fire suppression vehicle equipped with a water tank, minimum 500-gallon capacity, 250 feet of ¾-inch heavy-duty rubber hose, and a pump with a discharge capacity of at least 20 gallons per minute. The pump shall have fuel capacity to operate for at least 2 hours.
- The fire suppression vehicle shall be outfitted with one tool cache for fire use only, containing at a minimum: 2 long-handled round-point shovels, 2 axes or Pulaski fire tools, and 1 chainsaw of 3.5 or more horsepower, with a cutting bar of at least 20 inches in length.

7. IN CASE OF FIRE – INITIAL RESPONSE AND EMERGENCY CONTACTS

If a fire does start in the Project area and if the fire is manageable, safely attempt to control it with a fire extinguisher or other available equipment (e.g., using shovel to throw dirt on the fire or remove small patches of vegetation). As part of the environmental compliance training program, the construction contractor(s) will receive training on initial fire suppression techniques, reporting requirements, how to determine if a fire is manageable and what control measures should be implemented by onsite field crews, and at what point field crews should evacuate. The training also will address how to respond to wildfires in the area and maintain knowledge of and plans for evacuation routes.

If the fire is unmanageable, field crews will evacuate and first call 911, followed by a call to the district dispatch for the area (see emergency contacts listed on Table A4-1). All fires must be reported to the jurisdictional fire agency regardless of size and actions taken.

8. POSTFIRE REHABILITATION STRATEGIES

If the cause of a fire is determined to be the result of the Project, the Construction Contractor will implement rehabilitation measures as required by the BLM (see Appendix F – Right-of-Way Preparation, Rehabilitation, and Restoration), and the following postfire rehabilitation measures will be implemented by the construction contractor(s):

- After a fire has been extinguished, the burn areas will be reclaimed in accordance with BLM requirements. Small burn areas will be revegetated to the native vegetation using appropriate seed mixtures as identified in Appendix F. Larger burn areas may require specific restoration plans. Coordination with the BLM is necessary to determine requirements for each particular area, depending upon the size and location of a fire, and the location of sensitive resources.
- To prevent the spread of noxious weeds and invasive species during postfire rehabilitation, the measures as outlined in the Appendix B2 – Noxious Weed Management Plan will be implemented by the construction contractor(s).

This page intentionally left blank

Appendix A5 – Blasting Plan Methodology

TABLE OF CONTENTS

1. Introduction A5-1
  1.1. Purpose A5-1
  1.2. Regulatory Compliance and Procedures A5-1
2. Blasting Plan Guidance A5-1
  2.1. Overview of Blasting Principles A5-2
  2.2. Blasting Plan Contents A5-2
3. Safety Procedures A5-3
  3.1. Storage A5-4
  3.2. Blasting Notification and Safety Procedures A5-4
  3.3. Fire Safety A5-5
  3.4. Transportation of Explosives A5-5
4. Blasting Mitigation Measures A5-6
  4.1. Standard Mitigation Measures A5-6
  4.2. Selective Mitigation Measures A5-7
  4.3. Other Blasting Mitigation Measures A5-7

LIST OF TABLES

Table A5-1. Blasting Avoidance Periods A5-8

This page intentionally left blank

1. INTRODUCTION

This Blasting Plan Methodology outlines methods to mitigate risks and potential impacts associated with blasting procedures, should blasting be required for the construction of the Project. Also included in this section is a preliminary outline for the Blasting Plan, to be prepared by the construction contractor(s) and submitted to the BLM for final review and approval.

1.1. Purpose

Once completed, the Blasting Plan will provide construction crews, the CIC, and environmental monitors with Project-specific information concerning blasting procedures, including the safe use and storage of explosives. The objective of the Blasting Plan is to prevent adverse impacts to human health and safety, property, and the environment that could potentially result from the use of explosives during Project construction.

Blasting may be needed in certain areas with rocky terrain to excavate structure foundations, prepare substation pads, and for construction of access roads. Blasting will be used only in areas where traditional excavation and earth moving equipment and practices are not able to accomplish the excavation. In addition, the construction contractor(s) may elect to use implosive sleeves during line stringing activities to splice conductor and shield wire together. Areas where blasting will likely occur will be identified based on the geological setting of the proposed alignment, as identified in the geotechnical investigation to be conducted for the Project.

1.2. Regulatory Compliance and Procedures

The construction contractor(s) will be responsible for preparing and implementing the Blasting Plan and must comply with all applicable federal, state, and local laws and regulations that pertain to explosives. No blasting operations will be undertaken until approval and appropriate permits have been obtained from the applicable agencies. Failure to comply with such laws could result in substantial financial penalty and/or imprisonment.

The construction contractor(s) will use a qualified, experienced, and licensed Blasting Contractor that will perform the blasting using current and professionally accepted methods, products, and procedures to maximize safety during blasting operations. Blasting procedures will be carried out according to, and in compliance with, applicable laws and will be closely monitored by the CIC.

2. BLASTING PLAN GUIDANCE

Prior to blasting, the construction contractor(s) shall prepare a Blasting Plan for review and approval by the BLM, CIC, and other applicable parties. The Plan will address safety, as well as design for production and controlled blasting. It will also contain the full details of the drilling and blasting patterns, as well as the controls the Blasting Contractor proposes to use for both production and controlled blasting. Review of the Plan by the parties shall not relieve the Blasting Contractor of the responsibility for the accuracy and adequacy of the Blasting Plan when implemented in the field. A minimum of 2 weeks should be allowed for review and approval of the Blasting Plan by the BLM and appropriate agencies. If at any time changes are

proposed to the Blasting Plan, the construction contractor(s) shall submit them to the BLM and CIC for review and approval.

2.1. Overview of Blasting Principles

2.1.1. Locations

The construction contractor(s)'s Blasting Contractor will avoid blasting in potential rockslide/landslide areas to the maximum extent possible, and will consult with a geologist before blasting in such areas should avoidance not be possible (see Preconstruction Activities). A common practice for splicing conductor wire together is the use of 'implosive sleeves,' which use explosive materials. The Blasting Contractor should be knowledgeable about this practice and should coordinate with the CIC, particularly with regard to the locations of these practices.

2.1.2. Materials

The Blasting Contractor will determine the specific materials needed for blasting operations. These materials will be included on the hazardous materials list for the Project, and their use and storage will comply with applicable federal, state, and local laws and regulations.

2.2. Blasting Plan Contents

The Blasting Plan prepared by the construction contractor(s) shall contain the following minimum information in the following format:

1. Purpose
2. Scope of the Blasting
3. Definitions
4. Responsibilities
    a. Management Organization
    b. Authority Responsibility
    c. Blaster in Charge (licensed in Arizona and New Mexico)
5. Location of Blasting Area
    a. Description of Blasting Area
    b. Description of Bedrock and Geological Problems
    c. Description of Adjacent Utility Facilities
6. Environmental Considerations
7. Safety Considerations
    a. General
    b. Warning Signs and Signals
    c. Procedures around Adjacent Utility Facilities
    d. Traffic Control
    e. Emergency Blast Initiation
    f. Safety Publications
    g. Fire Prevention
    h. Safety Hazards
    i. Emergency Services and Communication

j. Minor or Non-Emergency Medical Care
k. First Aid

8. Risk Management
   a. Protection of Adjacent Utility Facilities
   b. Lightning
   c. Flyrock (note: flyrock will be controlled with blasting mats)
   d. Carbon Monoxide
   e. Ground Vibrations
   f. Seismically Sensitive Receptors
   g. Preblast Survey and Inspection
   h. Blast Damage Complaints
   i. Airblast
9. Blast Design Concept
   a. Station limits of proposed shot
   b. Plan and section views of proposed drill pattern, including free face, burden, blasthole spacing, blasthole diameter, blasthole angles, lift height, and subdrill depth
   c. Loading diagram showing type and amount of explosives, primers, initiators, and location and depth of stemming
   d. Initiation sequence of blastholes, including delay times and delay system
   e. Manufacturers' data sheets for all explosives, primers, and initiators to be employed
10. Procedures
   a. Delivery of Explosives
   b. Storage of Explosives and Blasting Agents
   c. Blast Hole Drilling
   d. General Handling of Explosives
   e. Blast Hole Loading
   f. Notification
   g. Initiation of Blast
   h. Misfire Management
   i. Test Blasting
11. Records
12. Attachments

3. SAFETY PROCEDURES

Safe storage and use of explosive materials will be a top priority during construction. The safety measures discussed in this section are intended to prevent theft and/or vandalism of the explosive materials; protect the explosive materials against fire; and prevent personal injury and property damage. These measures are intended as general guidelines only. Additional safety procedures specific to the blasting requirements for construction of the Project will be identified by the construction contractor(s) in the Blasting Plan.

3.1. Storage

Explosives must be stored in an approved structure (magazine) and kept cool, dry, and well-ventilated. The Project Proponent's construction contractor(s) will provide the Bureau of Alcohol, Tobacco, Firearms and Explosives (BATF) Regulatory Enforcement Office in Arizona and New Mexico, with a list of dates and locations for the explosives and blasting agent storage facilities to be used on the Project, at least 14 days before the establishment of such storage facilities.

At a minimum, the following storage requirements will be implemented:

- Explosives must be stored in an approved magazine; storage facilities will be bullet-resistant, weather-resistant, theft-resistant, and fire-resistant.
- Magazine sites will be located in remote (out-of-sight) areas with restricted access, kept cool, dry, and well ventilated, and will be properly labeled and signed.
- Detonators will be stored separately from other explosive materials.
- The most stringent spacing between individual magazines will be determined according to the guidelines contained in the BATF publication or state or local explosive storage regulations.
- Both the quantity and duration of temporary onsite explosives storage will be minimized.

The Blasting Contractor will handle and dispose of dynamite storage boxes in accordance with relevant federal, state, and local laws.

3.2. Blasting Notification and Safety Procedures

The construction contractor(s) will obtain a permit from the appropriate county, as needed, for the period when blasting may occur, and will comply with the following requirements developed by the BLM:

- The holder shall publish a proposed blasting schedule in the local newspaper, 1 week prior to any blasting taking place. The schedule shall identify the location, dates, and times that blasting will occur. No blasting shall occur outside of the published schedule, except in emergency situations.
- The holder shall post warning signs at all entry points for the Project. Warning signs shall contain information on blasting, including the general hours blasting might take place and the audible signals to be used that warn of impending blasting, indicating that the site is all clear.
- Access points to areas where blasting will take place will be blocked, to prevent access by the public, at least 30 minutes prior to blasting. The site shall be swept 5 minutes prior to any shot being put off, to ensure that no unauthorized personnel have wandered onto the site. An audible warning signal, capable of carrying for 0.5 mile, shall be used at least

2 minutes prior to the shot being put off. An "all clear" signal will be given once it has been determined that the area is safe.

- Blasting in the vicinity of pipelines will be coordinated with the pipeline operator and will follow operator-specific procedures, as necessary.

A determination of "all clear" from danger will be derived once the blasting area has been inspected for undetonated or misfired explosives. The blasting area will also be inspected for hazards such as falling rock and rock slides. Once the area has been inspected and these issues have been addressed, the "all-clear" signal as described above will sound, and persons will be able to safely re-enter the blast zone.

Additional safety precautions will be developed to address site-specific conditions at the time of the blast. Special attention will be given to preventing potential hazards in the blasting area resulting from flying rock, destabilized walls, structures, presence of low flying aircraft, and dispersion of smoke and gases.

3.3. Fire Safety

The presence of explosive materials on the Project site could potentially increase the risk of fire during construction. Special precautions will be taken to minimize this risk in conjunction with the Fire Protection Plan (Appendix A4), including but not limited to:

- prohibiting ignition devices within 50 feet of explosives storage areas
- properly maintaining magazine sites so that they are clear of fuels and combustible materials, are well ventilated, and are fire-resistant
- protecting magazines from wildfires that could occur in the immediate area
- posting fire suppression personnel at the blast site during high fire danger periods
- prohibiting blasting during extreme fire danger periods

3.4. Transportation of Explosives

Transportation of explosives will comply with all applicable federal, state, and local laws, including Title 49 of the Code of Federal Regulations, Chapter III. These regulations are administered by the U.S. Department of Transportation (U.S. DOT) and govern the packaging, labeling, materials compatibility, driver qualifications, and safety of transported explosives. In general, these regulations require that vehicles carrying explosive materials must be well maintained, properly marked with placards, and have a nonsparking floor. Materials in contact with the explosives will be nonsparking, and the load will be covered with a fire- and water-resistant tarpaulin. Vehicles must also be equipped with fire extinguishers and a copy of the Emergency Response Guidebook (U.S. DOT 1993). Every effort will be made to minimize transportation of explosives through congested or heavily populated areas.

Prior to loading a vehicle that is appropriate for carrying explosives, the vehicle shall be fully fueled and inspected to ensure its safe operation. Refueling of vehicles carrying explosives shall be avoided. Smoking shall be prohibited during the loading, transporting, or unloading of

explosives. In addition, the following specific restrictions apply to transport of other items in vehicles carrying explosives:

- tools may be carried in the vehicle, but not in the cargo compartment
- detonation devices can, in some cases, be carried in the same vehicle as the explosives, but must be stored in a specially constructed compartment(s)
- batteries and firearms shall never be carried in a vehicle with explosives
- vehicle drivers must comply with the specific laws related to the materials being transported

Vehicles carrying explosives shall not be parked or left unattended, except in designated parking areas with approval of the State Fire Marshall. When traveling, vehicles carrying explosives will avoid congested areas to the maximum extent possible.

4. BLASTING MITIGATION MEASURES

Blasting has the potential to cause environmental impacts. Implementing the protection measures listed below will mitigate these impacts. Stipulations developed by the BLM will be followed for protection of sensitive species, as well as the required notification discussed in Section 3.2 (above). The construction contractor(s) will notify the CIC and environmental monitors 24 to 48 hours prior to scheduled blasting, and comply with the permit requirements for notification by the appropriate counties, including any requirements for dust abatement. Regular field meetings will be held with the CIC and environmental monitors to review the process and its implementation. If changes are needed to the notification process, changes will be made to facilitate protection of environmental resources.

4.1. Standard Mitigation Measures

- Standard Mitigation Measure 7 – Construction holes left open overnight would be appropriately fenced or covered, to prevent wildlife or livestock from damage.

- Standard Mitigation Measure 8 – In construction areas (e.g., marshalling yards, tower sites, spur roads from existing access roads) where ground disturbance is significant or where grading is required, surface restoration would occur as required by the landowner or BLM Authorized Officer. The method of restoration would normally consist of returning disturbed areas back to their natural contour, reseeding (where required), installing cross drains for erosion control, placing water bars in the road, and filling ditches.

- Standard Mitigation Measure 9 – Watering facilities (e.g., tanks, developed springs, water lines, wells, etc.) would be repaired or replaced to their predisturbed condition, as required by the landowner or land management agency, if they are damaged or destroyed by construction activities. Temporary watering facilities would be provided for wildlife and livestock until permanent repair or replacement is complete.

- Standard Mitigation Measure 21 – Fences and gates would be repaired or replaced to their original predisturbed condition, as required by the landowner or the BLM Authorized Officer, if they are damaged or destroyed by construction activities. New

temporary and/or permanent gates will be installed only with the permission of the landowner or the BLM. Temporary gates not required for postconstruction access control (see Selective Mitigation Measure 6 in Section 6 of this POD) will be removed following construction completion, and the area restored in accordance with the Appendix F of the Final POD.

4.2. Selective Mitigation Measures

- Selective Mitigation Measure 5 – In addition to standard reseeding and recontouring practices (see Standard Mitigation Measure 8), a detailed Project reclamation plan would be developed to mitigate site-specific resource impacts.
- Selective Mitigation Measure 11 – To reduce visual contrast, mineral or asphalt emulsions (e.g., PermeonTM or approved equivalent) would be applied in rocky areas where newly exposed rock color would create strong landscape contrasts.
- Selective Mitigation Measure 12 – With the exception of emergency repair situations, right-of-way construction, restoration, maintenance, and termination activities in designated areas would be modified or discontinued during sensitive periods (e.g., nesting and breeding periods) for candidate, proposed threatened and endangered, or other sensitive animal species. Sensitive periods, species affected, and areas of concern would be approved in advance of construction or maintenance by the BLM Authorized Officer.

4.3. Other Blasting Mitigation Measures

- Avoid potential rockslide/landslide areas to the maximum extent possible and consult the blasting geologist before blasting in such areas.
- Design blasts to minimize ground vibrations that can cause slope instability and impact wells and springs.
- Limit hours of blasting to Monday through Saturday from 7:00 am to 7:00 pm, when blasting within 3,000 feet of sensitive receptors.
- Avoid blasting within 500 feet of wells/springs to the maximum extent possible.
- Adhere to species avoidance periods in Appendix B1 – Biological Resources Protection Plan.
- The Blasting Plan will identify blasting procedures, including safety, use, storage, and transportation of explosives that will be employed where blasting is needed, and will specify the locations of needed blasting.
- All blasting will be performed by registered licensed blasters who will be required to secure all necessary permits and comply with regulatory requirements in connection with the transportation, storage, and use of explosives and blast vibration limits for nearby structures, utilities, wildlife, and fish (where blasting is conducted in waterbodies).

- Appropriate flags, barricades, and warning signals will be used to ensure safety during blasting operations. Blast mats will be used when needed to prevent damage and injury from flyrock.
- Blasting in the vicinity of pipelines will be coordinated with the pipeline operator and will follow operator-specific procedures, as necessary.
- Damage that results from blasting will be repaired, or the owner will be fairly compensated.
- Proper blasting techniques, including proper cover of charges, should be followed.
- Matting will be used in rock blasting operations to minimize and control dust.
- Notification of blasting activities will be provided to nearby residents.
- The blasting contractor will prepare site-specific blasting plans.
- The blasting plan for the proposed Project will also stipulate the following:
  - Explosives will not be stored on federal land without prior written permission from the land management agency. Copies of this permission will be posted on each magazine.
  - Seventy-two-hour advance notice of blasting activities will be given to the land management agency, railroads, highway departments, and local communities; occupants of nearby residences, buildings, and businesses; and local farmers.
  - Warning signs will be erected and maintained at all approaches to the blast areas and flaggers will be stationed on all roadways passing within 1,000 feet of blasting activities.
  - Explosives will not be primed or fused until just before use.
  - Blasting will take place during daylight hours only and will be monitored with three axis seismographs to ensure safe vibration levels are not exceeded.
  - Vibration measured as peak particle velocity will not exceed 4 inches per second adjacent to an underground pipeline, and 2 inches per second for any aboveground structure (including water wells).

Blasting will be scheduled to avoid sensitive wildlife areas and seasons as identified in Table A5-1 and as illustrated in the Final POD Volume II (Map Sets 1 and 2). In addition, should preconstruction bird surveys identify occupied nests, appropriate avoidance periods and nondisturbance buffers will be established on a case-by-case basis, in accordance with each species' specific needs and as agreed upon by the BLM[1].

Table A5-1. Blasting Avoidance Periods

Resource	Avoidance Period	Buffer Zone (miles)
Mule Deer	11/1-4/15	Crucial Mule Deer Winter Range

[1] If pre-construction surveys find nests are not occupied, blasting may be allowed in the buffer zones during the avoidance period.

Appendix A6 – Erosion, Dust Control, and Air Quality Plan

TABLE OF CONTENTS

1. Introduction A6-1
  1.1. Purpose A6-1
  1.2. Regulatory Compliance A6-1
2. Environmental Concerns A6-2
  2.1. Soil Conservation and Erosion A6-2
  2.2. Air Quality and Dust Control A6-2
3. Mitigation A6-3
  3.1. Mitigation A6-3
  3.2. Other Specific Stipulations and Methods A6-6
4. Monitoring A6-9
  4.1. Construction and Reclamation Phase A6-9
  4.2. Operation and Maintenance Phase A6-10

This page intentionally left blank

1. INTRODUCTION

This Erosion, Dust Control, and Air Quality Plan addresses regulatory compliance, environmental concerns, mitigation recommendations, and monitoring to ensure impacts associated with construction activities are minimized as they relate to soil conservation and air quality.

1.1. Purpose

This plan provides measures to be utilized by the BLM, CIC, and construction contractor(s) to ensure the protection of the soils and air quality that will be affected by the Project, and to be implemented during the construction, operation, and maintenance phases of the Project. These measures are intended to address (1) soil erosion and sedimentation, and (2) minimization of dust and emissions from construction-related activities.

This plan describes a number of mitigation measures that can be used to achieve these goals. Determination of the appropriate control measures to use in a particular area will depend on a variety of factors, including weather conditions, selected construction techniques, site characteristics, extent of area to be disturbed, and other factors.

1.2. Regulatory Compliance

Construction, operation, and maintenance activities for the Project are subject to various regulations designed to protect environmental resources and the public from erosion, dust, and other possible effects to air quality. The following permits and documents contain the requirements for preventing accelerated erosion and minimizing dust and emissions. Refer to these permits and documents, along with this plan, when assessing which mitigation measures are appropriate for a specific area. At a minimum, the Proponent or the construction contractor(s) will need to adhere to or obtain the following permits.

1.2.1. Federal

- BLM – Right-of-Way Grant
- Environmental Protection Agency– National Pollutant Discharge Elimination System Permit: Clean Water Act (CWA) (33 United States Code [USC] 1342)
- U.S. Army Corps of Engineers – CWA, Section 404 Permit (Nationwide Permit Number 12)

1.2.2. State

1.2.2.1. Arizona

- Arizona Department of Environmental Quality (ADEQ), Arizona Pollutant Discharge Elimination System (AZPDES)
- Air Quality Division, Air Quality Permit

1.2.2.2. New Mexico

- New Mexico Air Quality Bureau, Construction and Operating permits

1.2.3. Local

- To be provided upon selection of preferred Project alternative.

2. ENVIRONMENTAL CONCERNS

2.1. Soil Conservation and Erosion

Soil conservation within the Project area includes minimizing impacts that could potentially affect soils from the construction and operation of the transmission line, such as minimizing wind and water erosion, soil compaction, surface disturbance, and construction activities in wet soils. Prior to ground disturbance, geotechnical studies will be conducted and a report for affected areas will be prepared to provide the Project Proponent more specific detail/measures regarding soil conservation within the Project area.

Erosion potential is the result of several factors, including slope, vegetation cover, climate, and the physical and chemical characteristics of the soil. Increased soil erosion may occur when vegetation is removed during construction or in areas where the surface is disturbed by heavy equipment. Increased water erosion often occurs during high-intensity or long-duration rainstorms, and may reduce the productivity of the soil as well as affect water quality of streams by accelerating sediment loading. Wind is also an erosion factor throughout portions of the Project area. Soil compaction could also be of concern if there is repeated traffic use on sections of access roads.

Where disturbance is anticipated in areas of steep terrain with high potential for erosion, vegetation clearing and grading will be conducted in the least invasive manner practicable, and soil stabilization and reclamation practices will be implemented in order to reduce erosion. In select locations, helicopter construction may be used to further reduce these impacts. In areas of soil compaction (e.g., temporary access roads), soil treatment and restoration will be implemented as directed in Appendix F – Right-of-Way Preparation, Rehabilitation, and Monitoring Framework Plan.

2.2. Air Quality and Dust Control

Construction of the transmission line and related facilities will cause a temporary increase in fugitive dust. Ambient levels of nitrogen oxides, hydrocarbons, and carbon monoxide near the construction zone will also be temporarily increased due to emissions from heavy construction equipment. Related facilities will cause a minimal increase in fugitive dust.

Air quality control measures are intended to minimize fugitive dust and air emissions and to maintain conditions as free from air pollution as is practical. All requirements of those entities having jurisdiction over air quality matters will be adhered to, and any permits needed for construction activities will be obtained (see Section 1, Table 1-2 of this POD). The construction contractor(s) will not proceed with any construction activities without taking reasonable

precaution to prevent excessive particulate matter from becoming airborne and creating nuisance conditions.

Excessive exhaust emissions from vehicles and heavy equipment will be prevented by proper maintenance, and no open burning of construction trash will be allowed unless permitted by the authorized officer.

Where necessary, water may be used for dust control during construction, including the grading of roads or the clearing of land and the right-of-way, and will be applied on unpaved roads, material stockpiles, and other surfaces that can create airborne dust. Where application of water is not significant, material stockpiles will be enclosed. In addition, open-bodied trucks transporting materials likely to become airborne will be covered, and earth or other materials that may become airborne will promptly be removed from paved roads. Where required, matting will be used in rock blasting operations to minimize and control dust (see Appendix A5 – Blasting Plan Methodology).

3. MITIGATION

The mitigation measures described in this section are applicable to Project construction, reclamation, operation, and maintenance of the Project. If new disturbances occur during the operation and maintenance phases of the Project, or if erosion control and air quality measures implemented during construction and reclamation are not effectively minimizing accelerated erosion and reducing dust, these mitigation measures will be reviewed and where necessary reimplementation will occur under the direction of the BLM Authorized Officer, CIC, and construction contractor(s).

3.1. Mitigation

Because of potential impacts from construction activities, several measures may be necessary to mitigate particular impacts. Following are the standard mitigation measures that will be adhered to during construction on a Project area-wide basis.

3.1.1. Standard Mitigation

- Standard Mitigation Measure 2 – All vehicle movement outside the right-of-way would typically be restricted to predesignated access, contractor acquired access, or public roads.

- Standard Mitigation Measure 3 – The boundary of construction activities would normally be predetermined, with activity restricted to and confined within those limits. No paint or permanent discoloring agents would be applied to rocks or vegetation to indicate survey or construction activity limits.

- Standard Mitigation Measure 4 – The alignment of any new access roads or overland route will follow the designated area's landform contours where possible, provided that such alignment does not additionally impact resource values. This will minimize ground disturbance and/or reduce scarring (visual contrast).

- Standard Mitigation Measure 5 – In construction areas where grading is not required, vegetation would be left in place wherever possible, and original contour would be maintained to avoid excessive root damage and allow for regrowth. All existing roads would be left in a condition equal to or better than their condition prior to the construction of the transmission line(s), as determined by the appropriate land-managing agency.

- Standard Mitigation Measure 6 – To limit new disturbance, existing access roads in the Project area would be used to the extent practicable, provided that doing so does not additionally impact resource values.

- Standard Mitigation Measure 8 – In construction areas (e.g., marshalling yards, tower sites, spur roads from existing access roads) where ground disturbance is significant or where grading is required, surface restoration would occur as required by the landowner or BLM Authorized Officer. The method of restoration would normally consist of returning disturbed areas back to their natural contour, reseeding (where required), cross drains installed for erosion control, placing water bars in the road, and filling ditches.

- Standard Mitigation Measure 18 – Roads would be built as near as possible at right angles to the streams and washes. Culverts or temporary bridges would be installed where necessary. All construction and maintenance activities shall be conducted in a manner that would minimize disturbance to vegetation, drainage channels, and intermittent or perennial stream banks.

- Standard Mitigation Measure 19 – To the extent practicable, structures will be sited with a minimum distance of 200 feet from streams.

- Standard Mitigation Measure 20 – All requirements of those entities having jurisdiction over air quality matters will be adhered to, any necessary dust control plans will be developed, and permits for construction activities will be obtained. Open burning of construction trash will not be allowed unless permitted by appropriate authorities.

3.1.2. Selective Mitigation

In selective areas, and on a case-by-case basis, the following mitigation measures will be implemented by the construction contractor(s):

- Selective Mitigation Measure 1 – No widening or upgrading of existing access roads will be undertaken in the area of construction and operation, except for repairs necessary to make roads passable, where soils and vegetation are very sensitive to disturbance, or where existing archaeological sites are present.

- Selective Mitigation Measure 2 – There will be no blading of new access roads in select areas of construction and operation. Existing crossings will be utilized at perennial streams, designated recreational trails, and irrigation channels. Off-road or cross-country access routes will be used for construction and maintenance in select areas. This will minimize ground disturbance impacts. These access routes must be flagged with an easily

seen marker, and the route must be approved in advance of use by the BLM Authorized Officer or landowner.

- Selective Mitigation Measure 3 – Overland access (i.e., drive and crush or cut and clear) would be used to the greatest extent possible in areas where no grading would be needed to access work areas. Drive and crush is vehicular travel to access a site without significantly modifying the landscape; vegetation is crushed but not cropped, and soil is compacted but no surface soil is removed. Cut and clear is considered as the brushing off (removal) of all vegetation to improve or provide suitable access for equipment; all vegetation is removed using above-ground cutting methods that leave the root crown intact.

- Selective Mitigation Measure 4 – All new access roads not required for maintenance would be permanently closed using the most effective and least environmentally damaging methods appropriate to that area (e.g., stock piling and replacing topsoil, or rock replacement), with concurrence of the landowner or appropriate land management agency. This would limit new or improved accessibility into the area.

- Selective Mitigation Measure 5 – In addition to standard reseeding and recontouring practices (see Standard Mitigation Measure 8), a detailed Project reclamation plan would be developed to mitigate site-specific resource impacts.

- Selective Mitigation Measure 6 – To minimize disturbance to sensitive habitats or resources, access roads required for operation and maintenance purposes would be gated or otherwise blocked from public access.

- Selective Mitigation Measure 8 – In designated areas, structures would be placed so as to avoid and/or to allow conductors to span sensitive features such as riparian areas, water courses, roads, trails, bat roosts, and cultural sites, and/or to allow conductors to span the features within limits of standard tower design. This would minimize the amount of sensitive features disturbed and/or reduce visual contrast.

- Selective Mitigation Measure 13 – Helicopter placement of structures may be used to reduce ground disturbance (e.g., to minimize soil erosion, vegetation loss, and visual impacts).

- Selective Mitigation Measure 14 – To minimize disturbance to timber resources and reduce visual contrast, the clearing of trees in and adjacent to the right-of-way would be minimized to the extent practicable to satisfy conductor-clearance requirements (NESC and up to 10 years of timber growth). Trees and other vegetation will be removed selectively (e.g., edge feathering) to blend the edge of the right-of-way into adjacent vegetation patterns, as practicable and appropriate.

3.2. Other Specific Stipulations and Methods

3.2.1. Working in Wet Soils

Construction, operation, and maintenance activities will be restricted when the soil is too wet to adequately support construction or maintenance equipment (i.e., when heavy equipment creates ruts in excess of 5 inches deep over a distance of 100 feet or more in wet or saturated soils). This standard will not apply in areas with silty soils, which easily form depressions even in dry weather. Where the soil is deemed too wet, one or more of the following measures will apply:

- When feasible, reroute all construction or maintenance activities around the wet areas, so long as the route does not cross into sensitive resource areas.

- If wet areas cannot be avoided, implement use of wide-track or balloon-tire vehicles and equipment, or other weight dispersing systems approved by the appropriate resource agencies. The use of geotextile cushions (prefabricated equipment pads) and other materials could also be used to minimize damage to the substrate where determined necessary by resource specialists. If these measures cannot be successfully applied to wet or saturated soil areas, construction or routine maintenance activities will not be allowed in these areas until the CIC and/or BLM Authorized Officer determines it is acceptable to proceed.

- Limit access of construction equipment to the minimum area feasible, remove and separate topsoil in wet or saturated areas, and stabilize subsurface soils with a combination of one or more of the following: grading to dewater problem areas, use weight dispersion mats, and maintain erosion control measures such as surface rilling and back-dragging. After construction is complete, regrade and recontour the area, replace topsoil, and reseed to achieve the required plant densities as required by the BLM.

- If equipment creates excessive ruts in wet or saturated soils as determined by the CIC, and these areas require supplemental dewatering, stabilization, erosion control, and reclamation measures to continue construction during wet conditions, increased impacts on soils and vegetation will be mitigated by restoration and preservation of disturbed soils and vegetation communities offsite. The restoration and/or preservation will take place offsite in the Project area, at a ratio to be determined in consultation with the BLM and the Project Proponent. The final acreage for compensation will be determined by quantifying the postconstruction disturbance area and condition. Even though it is not considered a significant impact, a compensation ratio of 1:1 offsite is proposed to mitigate for any increased permanent or temporary impacts to soils and vegetation related to continuing construction during wet conditions. This mitigation measure will be in addition to the onsite reclamation of the soil and vegetation disturbed by construction activities during wet conditions.

3.2.2. Vegetation Removal Methods

Vegetation removal and soil disturbances (including temporary road improvements) will be minimized in areas where soil constraints occur. In areas of overland construction, where vegetation removal is required, mowing or cutting will be the primary method used (see

Appendix F – Right-of-Way Preparation, Rehabilitation, and Monitoring Framework Plan). Plants will generally be cut at a height that results in the least damage to the root crown during cutting or subsequent damage by vehicles and equipment. Blading will be restricted to those areas as identified in the Final POD Volume II (Map Sets 1 and 2).

3.2.3. Construction on Expansive Soils

Prior to construction, soils will be evaluated by the Project's geotechnical engineer to determine if they are expansive and if they may have potential effects on the proposed facilities. Where they represent a potential hazard, solutions recommended by the Project's geotechnical engineer, such as excavation and replacement of the expansive soils with compacted backfill, will be required. If imported backfill material is used, it must be from a BLM-approved source and certified as free of invasive weeds and propagules (i.e., seeds and root fragments).

3.2.4. Reducing Short-Term Erosion and Sedimentation

The objectives of these measures are to reduce short-term erosion and sedimentation, as well as quickly restore topography and vegetation to preconstruction conditions in all areas required and approved by the BLM. A qualified resource specialist or the CIC will monitor implementation during construction through the operation phase until successful revegetation is achieved. Monitoring of the erosion control measures will continue until reclamation efforts are considered complete and successful. Implementation of the following practices will minimize the effects of grading, excavation, and other surface disturbances in Project areas.

- Limit disturbance of soils and vegetation removal to the minimum area necessary for access and construction.
- Inform all construction personnel, before they are allowed to work on the Project, of environmental concerns, pertinent laws and regulations, and elements of the erosion control plan.
- Minimize grading; when required and practicable, grading should be conducted away from watercourses (receiving waters) to reduce the risk of material entering the watercourse.
- Graded material should be sloped and bermed where possible, to reduce surface water flows across the graded area.
- Replace excavated materials in disturbed areas and minimize the time between excavation and backfilling.
- Direct the dewatering of excavations onto stable surfaces to avoid soil erosion.
- Use detention basins, certified weed-free straw bales, or silt fences where appropriate.
- Use drainage control structures, where necessary, to direct surface drainage away from disturbance areas and to minimize runoff and sediment deposition downslope from all

disturbed areas. These structures include culverts, ditches, waterbars (berms and cross ditches), rolling dips, and sediment traps.

- In areas of highly erodible soils, nonstandard construction equipment and techniques that minimize surface disturbance, soil compaction, and loss of topsoil will be used, such as vehicles with low ground pressure ties or helicopters when feasible and practicable. Vegetation clearing should be minimized to the degree possible. Erodible slopes that do not require grading should be cleared using equipment that results in little to no soil disturbance to the degree practicable.

- Reestablish native vegetation cover in highly erodible areas as quickly as possible following construction, where determined necessary (see Appendix F – Right-of-Way Preparation, Rehabilitation, and Monitoring Framework Plan).

3.2.5. Drainage Control

A variety of drainage control structures will be used to direct surface runoff away from the road surface to prevent rill and rut development and to control runoff and sediment discharges. The road improvements will include culverts, water bars at appropriate intervals related to slope and geological material, ditches, and appropriate grades and inclination.

3.2.6. Dust Control

Water or dust suppressant trucks will be the primary means of dust abatement during all phases of construction. At each structure site, the disturbed soil will be watered or treated with a BLM-approved dust suppressant to form a crust. Roads will be treated continuously as needed to minimize dust. Liquid application will be controlled so that pooling will be avoided to the extent possible.

Construction water and water used for dust control will come from permitted sources identified by the construction contractor(s), and a map showing the locations of these sources will be provided by the CIC. If the quality of the water is found to be causing any environmental changes (i.e., dying vegetation, excessively hard crusting of soils), the construction contractor(s) will test the quality of the water and provide the results to the BLM for review.

All Project personnel will be educated on dust control procedures.

3.2.7. Reducing Wind or Water Erosion

To prevent accelerated wind or water erosion on dirt roads, gravel mulches may be added if the mitigation measures described above are not adequate or if the area is not in a sensitive receptor zone. Gravel of approximately 0.75- to 1.5-inch diameter should be used and cover a minimum of 90 percent of the soil surface. Slopes steeper than 3:1 may require additional sediment and erosion control structures.

3.2.8. Topsoil Replacement

Topsoil salvage and replacement will follow the guidelines in Appendix F – Right-of-Way Preparation, Rehabilitation, and Monitoring Framework Plan.

3.2.9. Surface Roughening

Surface roughening aids establishment of vegetative cover, reduces runoff velocities, increases infiltration, and reduces erosion by providing sediment trapping. Graded areas with smooth surfaces increase the potential for accelerated erosion; therefore, surfaces should be left in a roughened condition whenever possible.

3.2.10. Natural Rock Riprap and Erosion Control Matting

On steep slopes (greater than 30 percent) or in areas of concentrated flows (e.g., waterways), erosion control matting or riprap may be used to stabilize the surface and increase infiltration times.

4. MONITORING

Monitoring of erosion control mitigation measures will continue until reclamation efforts are considered complete and successful, and accelerated erosion has been controlled. The following provides guidance for monitoring the mitigation measures.

4.1. <u>Construction and Reclamation Phase</u>

4.1.1. Erosion Control Structures

During construction, temporary erosion control structures should be inspected daily by the CIC in areas of active construction or equipment operation; on a weekly basis in areas with no equipment operation; and in all affected areas within 24 hours of each 0.5-inch or greater rainfall event, soil or weather conditions permitting.

If structures clog, deteriorate, fail, are damaged, require maintenance, or are ineffective, the CIC and construction contractor(s) will ensure that remedial actions are taken within 24 hours, soil or weather conditions permitting.

4.1.2. Graveled Areas

Areas graveled for stabilization should be inspected to ensure that depressions caused by vehicle traffic are filled and that runoff is not being directed toward wetlands or other receiving waters.

4.1.3. Surface Roughening

Roughened surfaces should be periodically inspected for rills and washes. Areas exhibiting accelerated erosion will be modified with grade control structures and reseeded and/or revegetated as necessary, or as determined by the BLM Authorized Officer.

4.2. Operation and Maintenance Phase

After construction and reclamation, monitoring of the erosion control mitigation measures will continue on an annual basis according to the monitoring provisions identified in Appendix F of this POD, during the operation and maintenance phase, until affected soils have been stabilized so that there is no accelerated erosion or minimal accelerated erosion, and until reclamation efforts are considered complete and successful.

Appendix A7 – Hazardous Materials Management Plan

TABLE OF CONTENTS

1. Introduction A7-1
  1.1. Purpose A7-1
  1.2. Regulatory Compliance A7-2
2. Guidelines for Developing the Hazardous Materials Management Plan A7-3
  2.1. Certifications, Acknowledgments, and Designation of Coordinator/Responsible Person A7-4
  2.2. Facilities Description and Inventory of Material A7-5
3. Spill Prevention Procedures A7-5
  3.1. Overview of Hazardous Materials Proposed for Use A7-5
  3.2. Refueling and Servicing A7-6
  3.3. Transportation of Hazardous Materials A7-7
  3.4. Storage of Hazardous Materials A7-7
  3.5. Disposal of Hazardous Wastes A7-9
  3.6. Contaminated Containers A7-9
  3.7. Waste Oil Filters A7-10
  3.8. Used Lubricating Oil A7-10
4. Hazardous Materials Mitigation Measures A7-10
  4.1. Other Hazardous Materials Mitigation Measures A7-11
5. Spill Control and Countermeasures A7-12
  5.1. Physical and Procedural Response Measures A7-12
  5.2. Employee Spill Prevention/Response Training and Education A7-13
6. Notification and Documentation Procedures A7-14
  6.1. Required Notification A7-14
  6.2. Documentation A7-15
7. Operations and Maintenance A7-16
Attachment A7: Sample Hazardous Materials Management Forms ..... Attachment A7-1

LIST OF TABLES

Table A7-1. Standard Spill Information Requested by Agencies A7-15

LIST OF FIGURES

Figure A7-1. Sample Hazardous Waste Label for Onsite Storage A7-9

This page intentionally left blank

1. INTRODUCTION

Hazardous materials management guidelines for the Project are intended to reduce the risks associated with the use, storage, transportation, production, and disposal of hazardous materials, including hazardous substances and waste. These guidelines address spill prevention, response, and cleanup procedures for the Project, and provide a template for the development of a more detailed Hazardous Materials Management Plan. If necessary, they could also provide a template for the development of a Spill Prevention Control and Countermeasures (SPCC) Plan, to be developed by the construction contractor(s), which will identify specific legal requirements and practices to achieve these goals.

The Hazardous Materials Management Plan will clearly identify which legal requirements apply to specific types of hazardous materials; and will identify best management practices that, although not legally required, will be followed to reduce risks associated with hazardous materials. Nothing in these guidelines or in the Hazardous Materials Management Plan shall be construed as an admission regarding the legal applicability of requirements or practices to any particular class of hazardous material.

The term "hazardous materials," as presented in these guidelines, will refer to hazardous substances, hazardous waste, marine pollutants, elevated temperature materials, and materials designated as hazardous for transportation as defined in 49 Code of Federal Regulations (CFR) 171.8.

1.1. Purpose

The goals of these guidelines are to: (1) minimize the potential for a spill of fuel or other hazardous materials; (2) contain any spillage to the smallest possible area; (3) protect areas that are environmentally sensitive; and (4) provide a template for the development of a more detailed Hazardous Materials Management Plan (to be developed by the construction contractor(s)). These guidelines include the following components:

- guidelines for the development of the Hazardous Materials Management Plan
- spill prevention procedures related to the transportation, storage, and disposal of hazardous materials
- spill control, response, and cleanup methods
- an overview of the notification and documentation procedures to be followed in the event of a spill
- operation and maintenance considerations

In addition, sample hazardous materials management forms (that may be used as examples by the construction contractor[s]) are provided at the end of this appendix.

In general, hazardous materials, hazardous waste, and cleanup equipment will be stored in approved containers until they can be properly transported and disposed of at an approved treatment, storage, and disposal facility (TSDF). Persons responsible for handling or transporting hazardous materials for this Project will be trained in the proper use/management of the materials

and should be familiar with all applicable laws, policies, procedures, and mitigation measures related to such handling or transportation.

1.2. Regulatory Compliance

Major legislation pertaining to hazardous materials includes the Comprehensive Environmental Response, Compensation, and Liability Act (CERCLA); the Resource Conservation and Recovery Act (RCRA); and the Clean Air Act (CAA) and the CWA.

Numerous other federal, state, and local regulations also govern the use, storage, transport, production, and disposal of hazardous materials. Some of the key requirements of these laws are outlined in:

Occupational Safety and Health Administration (29 CFR 1900-1910)

- 28 CFR 1900-1910 Occupational Safety and Health Act
- 29 CFR 1904 Recording and Reporting Occupational Injuries and Illness
- 29 CFR 1910.1200 Hazard Communication
- 29 CFR 1926 Safety and Health Regulations for Construction

Clean Water Act (40 CFR 100-149)

- 40 CFR 110 Discharges of Oil
- 40 CFR 112 Oil Pollution Prevention
- 40 CFR 116 Designation of Hazardous Substances
- 40 CFR 117 Determination of Reportable Quantities for Hazardous Substances
- 40 CFR 122 The National Pollutant Discharge Elimination System (NPDES) Permit Program
- 40 CFR 125 Criteria and Standards for the NPDES
- 40 CFR 129 Toxic Pollutant Effluent Standards
- 40 CFR 131 Water Quality Standards
- 40 CFR 141 – 149 Safe Drinking Water Act

Clean Air Act (40 CFR 50-99)

- 40 CFR 50 National Ambient Air Quality Standards
- 40 CFR 61-63 National Emissions Standards for Hazardous Air Pollutants

Toxic Substances Control Act (40 CFR 700-799)

- 40 CFR 710 Toxic Substances Control Act Chemical Inventory Regulations
- 40 CFR 761 PCBs Manufacturing, Processing, Distribution in Commerce, and Use Prohibitions

CERCLA/Superfund Amendments and Reauthorization Act (40 CFR 300-399)

- 40 CFR 300 National Oil and Hazardous Substances Pollution Contingency Plan

- 40 CFR 302 Designation, Reportable Quantities, and Notification
- 40 CFR 355 Emergency Planning and Notification
- 40 CFR 370 Hazardous Chemical Reporting: Community Right-to-Know
- 40 CFR 372 Toxic Chemical Release Reporting: Community Right-to-Know

Solid and Hazardous Wastes (40 CFR 239-299)

- 40 CFR 201-211 Noise Abatement Programs
- 40 CFR 243 Guidelines for the Storage and Collection of Residential, Commercial, and Institutional Solid Waste
- 40 CFR 260 Hazardous Waste Management System: General
- 40 CFR 261 Identification and Listing of Hazardous Waste
- 40 CFR 262 Standards Applicable to Generators of Hazardous Waste
- 40 CFR 263 Standards Applicable to Transporters of Hazardous Waste
- 40 CFR 273 Standards for Universal Waste Management
- 40 CFR 279 Standards for the Management of Used Oil

Hazardous Materials Transportation Act (49 CFR 100-199)

- 49 CFR 130 Oil Spill Prevention and Response Plans
- 49 CFR 171 General Information, Regulations, and Definitions
- 49 CFR 172 Hazardous Materials Table, Special Provisions, Hazardous Materials Communications, Emergency Response Information, and Training Requirements
- 49 CFR 177 Carriage by Public Highway

Arizona Specific Regulations

- Arizona Revised Statues (ARS) Title 49, Chapter 2 Water Quality Control, Compliance, and Enforcement
- ARS Title 49 Chapter 3, Air Quality Control
- ARS Title 49 Chapter 5, Hazardous Waste Permitting, Compliance; and ARS Title 49 Environmental Requirements
- ARS Title 40, Article 6.4 High Voltage Power Lines and Safety Requirements

New Mexico Specific Regulations

- New Mexico Environmental Department (NMED) Title 20 Environmental Protection
- NMED Title 20.2 Air Quality
- NMED Title 20.4 Hazardous Waste
- NMED Title 20.6 Water Quality

2. GUIDELINES FOR DEVELOPING THE HAZARDOUS MATERIALS MANAGEMENT PLAN

The following sections provide specific guidelines for the construction contractor(s) to prepare the Hazardous Materials Management Plan and the SPCC Plan, if required. The construction

contractor(s) shall provide all information requested in the forms (found at the end of this appendix) to the Project Proponent. In addition, the construction contractor(s) shall complete any other required county, state, or federal forms.

2.1. Certifications, Acknowledgments, and Designation of Coordinator/Responsible Person

2.1.1. Certifications

The construction contractor(s) shall certify that all of the information provided in the Hazardous Materials Management Plan is accurate and complete, to the best of their knowledge. The construction contractor(s) shall also certify that they are committed to implementing the plan as written. If an SPCC plan is required, per the requirements of 40 CFR Part 112, the construction contractor(s) shall have the plan reviewed and certified by a registered professional engineer.

2.1.2. Amendments

The construction contractor(s) shall agree to make all necessary and appropriate amendments to the Hazardous Materials Management Plan, and submit any and all such amendments to the Project Proponent and the appropriate county (if required), state, or federal authorities within 7 days of finding that an amendment is necessary.

Amendments to the Hazardous Materials Management Plan shall be necessary under any of the following circumstances:

- applicable laws or regulations are revised
- a 100 percent or more increase of a previously disclosed hazardous material
- any handling of a previously undisclosed hazardous material subject to inventory requirements
- a change in formulation of a previously disclosed material (e.g., solid to liquid)
- a change of business address, name, or ownership
- the list of emergency coordinators changes
- the list of emergency equipment changes

The construction contractor(s) may be required to amend any SPCC Plan, as required by the applicable regulations.

2.1.3. Responsible Person

The construction contractor(s) shall identify an emergency coordinator responsible for hazardous materials management and emergency response. Two alternates shall also be identified. Business, residential, and cellular or pager telephone numbers shall be provided for all three persons, as necessary, to allow for contact on a 24-hour basis. Primary and alternate emergency response coordinators shall be knowledgeable of the chemicals and processes involved in construction of the Project, and will have the authority to commit construction contractor(s) resources toward implementation of the plan. They also shall have stop-task authority in case of noncompliance or danger to human health or the environment.

2.2. Facilities Description and Inventory of Material

2.2.1. Site Map

The construction contractor(s) will provide a site map/facility map in the Hazardous Materials Management Plan that contains material yards, which indicates storage and safety precautions for hazardous materials and hazardous wastes. All maps must be provided on standard 8½ x 11-inch paper. The construction contractor(s)'s site map shall, at a minimum, indicate the following:

- orientation and scale
- total land area in square feet
- access and egress points
- buildings and/or temporary trailers
- parking areas
- adjacent land uses (if business, indicate business name)
- surrounding roads, storm drains, and waterways (including streams and wetlands)
- locations of hazardous materials and hazardous waste storage
- underground and aboveground tanks
- containment or diversion structures (dikes, berms, retention ponds)
- shutoff valves and/or circuit breakers
- location of emergency response materials and equipment
- location of material safety data sheets (MSDS) and Hazardous Materials Management Plan, and the Spill Prevention Plan
- location of emergency assembly area

2.2.2. Inventory

The construction contractor(s) shall provide a complete inventory of all hazardous materials that meet reportable quantities, and shall be responsible for consulting with the relevant agencies if acutely hazardous materials are handled. All inventory forms shall be provided to the Project Proponent by the construction contractor(s) as a part of their Hazardous Materials Management Plan.

3. SPILL PREVENTION PROCEDURES

Construction, operation, and maintenance of the Project will require the use of certain potentially hazardous materials such as fuels, oils, explosives, and herbicides. By definition, hazardous materials (substances and wastes) have the potential to pose a significant threat to human health and the environment based upon their quantity, concentration, or chemical composition. When stored, used, transported, and disposed of properly (as described below), the risks associated with these materials can be reduced substantially.

3.1. Overview of Hazardous Materials Proposed for Use

The following Project-specific measures pertain to all vehicle refueling and servicing activities, as well as the storage, transportation, production, and disposal of hazardous materials/waste. These measures are intended to prevent the discharge of fuels, oils, gasoline, and other harmful

substances to waterways, groundwater aquifers, and/or other sensitive resource areas during Project construction and maintenance.

Hazardous materials used during Project construction may include petroleum products such as gasoline, diesel fuel, and hydraulic fluid; lubricating oils and solvents; cleansers; explosives; and other substances. Some of these materials will be used in relatively large quantities at material yards, and in rare instances on the right-of-way to operate and maintain equipment during construction. Explosives will be used for blasting rock where needed to install transmission towers and associated access roads (see Appendix A5 – Blasting Plan Methodology).

Smaller quantities of other materials such as pesticides and fertilizers, paints, and chemicals (i.e., sulfur hexafluoride), may be used during Project operation and maintenance. Pesticides and herbicides are hazardous materials and will be used according to labeling (see Appendix B2 – Noxious Weed Management Plan). The construction contractor(s) will maintain the inventory of all hazardous materials used; and shall maintain copies of the required MSDS for each hazardous chemical, ensuring that they are readily accessible during each work shift to all employees when they are in their work area(s). The MSDS will provide basic emergency response information for small and large releases of the hazardous materials. In the case that bulk hazardous materials are used, the Emergency Response Guidebook, produced by the U.S. DOT, is an acceptable reference. The construction contractor(s) should have a well-developed Hazardous Material Program in place, and work to use nonhazardous substances in routine construction and maintenance activities to the extent possible.

3.2. Refueling and Servicing

Construction vehicles (trucks, bulldozers, etc.), helicopters, and equipment (pumps, generators, etc.) generally will be fueled and serviced in designated areas at least 100 feet from streams (including intermittent and perennial) and wetlands (including dry or seasonal), to be determined and enforced by the CIC. Refueling locations generally should be flat to minimize the chance of a spilled substance reaching a stream. In most cases, smaller rubber-tired vehicles will be refueled and serviced at local gas stations or material yards. Tracked vehicles typically will be refueled and serviced onsite. In some cases, pickup trucks or tankers will be used to refuel and service construction vehicles on the right-of-way. Every effort will be made to minimize the threat of a fuel spill during refueling and servicing. Fuel/service vehicles will carry sufficient quantities of a suitable absorbent material capable of collecting approximately 20 gallons of spilled materials. In addition, all vehicles will be inspected for leaks prior to being brought onsite, and regularly throughout the construction period.

Washing of construction vehicles, such as concrete trucks, will be allowed only in designated areas at least 100 feet from streams and wetlands (as defined above). Washing areas will be contained with berms/barriers to prevent migration of wastewater and/or sediments into streams and waterways, and waste concrete material will be removed and properly disposed of once it has hardened. Additionally, all preventive measures—identified in Appendix B2 – Noxious Weed Plan, Section 3.2—will be followed, specifically relating to vehicle washing procedures.

3.3. Transportation of Hazardous Materials

Procedures for loading and transporting fuels and other hazardous materials will meet the minimum requirements established by the U.S. DOT, ADOT, and NMDOT, as well as other pertinent regulations (including applicable county department of transportations). Prior to transporting hazardous materials, appropriate shipping papers shall be completed. Transportation of hazardous materials should be performed by a hazardous material transport firm, in accordance with U.S. DOT regulations. In addition, the construction contractor(s) will ensure that all handling or packaging of hazardous materials and all paperwork for transport of hazardous materials shall be performed by properly trained personnel, in accordance with U.S. DOT, ADOT, and NMDOT regulations.

All hazardous materials used for the Project will be properly stored in approved U.S. DOT containers and labeled at all times, including during transportation. Smaller containers will be used onsite to transport needed amounts of hazardous materials to a specific location. Transfer of materials from large to small containers will not be done by hand pouring, but will instead be accomplished using appropriate equipment including pumps, hoses, and safety equipment. These smaller ("service") containers will also be clearly labeled. Special provisions apply to the transportation of explosives (see Appendix A5 – Blasting Plan Methodology).

3.4. Storage of Hazardous Materials

Hazardous materials will be stored only in designated material yards. Material yards will be located at least 100 feet from the edge of perennial and intermittent streams, wetlands (including dry or seasonal), and sensitive areas, and shall be able to contain the single largest quantity/unit stored at any one time, plus 10 percent. If material yards cannot be located at least 100 feet from streams and wetlands because of topographic conditions or space limitations, special precautions will be taken to prevent the spill or release of hazardous materials into the waterway. These precautions will include limiting the quantity and amount of time such materials are stored near waterways, fortifying barriers or providing additional containment between hazardous materials and the waterway, and using trained personnel to monitor activities at the yard. Cleanup materials, including absorbent spill pads and plastic bags, will also be stored in these areas. The construction contractor(s) will specify the appropriate spill kit containing these materials in the Hazardous Materials Management Plan. Hazardous materials will not be stored in areas subject to flooding or inundation.

The construction contractor(s) shall coordinate with the CIC when storage areas cannot be located at least 100 feet from streams and wetlands.

3.4.1. Physical Storage Requirements

- *Storage Containers*: Containers holding hazardous waste or materials shall be compatible with the waste or materials stored. If the container is damaged or leaks, the waste must be transferred to a container in good condition. The construction contractor(s) shall inspect containers at least weekly to verify the integrity of the containers or the containment systems. Containers used for transportation must comply with the U.S. DOT, ADOT, and NMDOT requirements.

- *Incompatible Materials:* Materials, including hazardous waste, shall not be placed in containers if they previously held an incompatible material.

- *Ignitable or Reactive Materials*: Materials or wastes that may ignite or are reactive must be located at least 50 feet from the material yard's property line. "NO SMOKING" signs shall be conspicuously placed wherever there is a hazard from ignitable or reactive material.

- *Container Management*: Containers holding hazardous waste shall be kept closed during transfer and storage, except when it is necessary to add or remove contents. Before the handling and/or transportation of containers carrying hazardous wastes, the containers should be inspected to ensure that they are sealed such that no material spillage occurs.

- *Secondary Containment*: Secondary containment will consist of bermed or diked areas that are lined and capable of holding 110 percent of the volume of the stored material, and shall be provided for liquid hazardous materials stored onsite.

- *Security*: Hazardous wastes and materials will be stored in secure areas to prevent damage, vandalism, or theft. All storage containers shall remain sealed when not in use, and storage areas shall be secured (gated, locked, and/or guarded) at night and/or during nonconstruction periods.

- *Explosives*: Storage of explosives is discussed in Appendix A5 – Blasting Plan Methodology.

3.4.2. Container Labeling Requirements

The construction contractor(s) shall comply with the following labeling requirements for any container (including tanks) used onsite to store accumulated hazardous wastes. Figure A7-1 shows an example of a hazardous waste label for onsite storage. The containers shall be labeled with the information below and as required in 40 CFR 262.31:

- words: "Hazardous Waste"
- composition and physical state of the wastes
- accumulation start date and/or the date the 9-day storage period began
- warning words indicating the particular hazards of the waste, such as: flammable, corrosive, or reactive
- name and address of the facility that generated the waste
- contact person and telephone number

HAZARDOUS WASTE
Contents: _____ Physical State (gas, liquid, solid): _____ Accumulation Start Date: _____ Hazards: _____ Name and Address of Generator: _____ _____ _____ Contact Person: _____ Telephone: _____
HANDLE WITH CARE! CONTAINS HAZARDOUS OR TOXIC WASTES

Figure A7-1. Sample Hazardous Waste Label for Onsite Storage

3.5. Disposal of Hazardous Wastes

Hazardous waste will be collected regularly and disposed of in accordance with all applicable laws and regulations. The construction contractor(s) shall determine details on the proper handling and disposal of hazardous waste, and shall assign responsibility to specific individuals prior to construction of the Project.

Every effort will be made to minimize the production of hazardous waste during Project construction including, but not limited to, minimizing the amount of hazardous materials needed for the project; using alternative nonhazardous substances when available; recycling usable material such as oils, paints, and batteries to the maximum extent; and filtering and reusing solvents and thinners whenever possible.

Any generator of hazardous waste (except households) must apply for an Environmental Protection Agency Identification Number; this number is needed to complete the Uniform Hazardous Waste Manifest to ship wastes offsite. A generator can store hazardous wastes onsite for a period of up to 90 days, without having to obtain a permit as a storage facility.

3.6. Contaminated Containers

Containers that once held hazardous materials or hazardous waste must be considered as potential hazardous waste, due to possible presence of residual hazardous material. If certain requirements are met, as specified in regulations and listed below, the empty container can be handled as a nonhazardous waste.

- The containers must be empty (as much of the contents as possible have been removed), using the practices commonly employed to remove materials from that type of container (e.g., pouring, pumping, and aspirating) so that none will pour out in any orientation.
- A container that held compressed gas is empty when the pressure in the container approaches atmospheric.
- If empty containers are less than 5 gallons, they may be disposed of as nonhazardous solid waste or scrapped.

- If the empty containers are greater than 5 gallons, they must be handled in the following manner:
  - returned to the vendor for reuse
  - sent to a drum recycler for reconditioning
  - used or recycled onsite

All these actions must occur within 1 year of the container being emptied.

3.7. Waste Oil Filters

Used metal canister oil filters can be managed as nonhazardous wastes:

- as long as they are thoroughly drained of "free flowing" oil (oil exiting drop-by-drop is not considered "free flowing")
- the filters are accumulated, stored, and transferred in a closed, rainproof container
- the filters are transferred for the purposes of recycling
- the filters are not terne-plated (an alloy of tin and lead)

Terne-plated oil filters are a hazardous waste, exhibiting the hazardous characteristic of lead. Terne-plated oil filters that are not recycled must be managed as a hazardous waste.

3.8. Used Lubricating Oil

Lubrication oil is considered used, as listed below:

- any oil that has been refined from crude oil and has been used, and as a result of use has been contaminated with physical or chemical impurities
- any oil that has been refined from crude oil and, as a consequence of extended storage, spillage, or contamination with nonhazardous impurities such as dirt, rags, and water, is no longer useful to the original purchaser
- spent lubricating fluids that have been removed from a bus, truck, automobile, or heavy equipment

Used oil may be a hazardous waste if:

- the concentrations of polychlorinated biphenyls exceed 50 parts per million
- total halogens exceed 1,000 parts per million
- mixed with a hazardous waste

Used oil not being recycled must be managed as a hazardous waste unless it is determined to be nonhazardous through laboratory analysis.

4. HAZARDOUS MATERIALS MITIGATION MEASURES

Because of potential impacts from construction activities, several measures may be necessary to mitigate impacts from hazardous materials. Following are the measures that will be applied to mitigate hazardous materials impacts.

4.1. Other Hazardous Materials Mitigation Measures

- Physical response actions are intended to ensure all spills are promptly and thoroughly cleaned up. However, the first priority in responding to any spill is personal and public safety. Construction personnel will be notified of evacuation procedures to be used in the event of a spill emergency, including evacuation routes. In general, the first person on the scene will:

  - attempt to identify the source, composition, and hazard of the spill
  - notify appropriately trained personnel immediately
  - isolate and stop the spill, if possible, and begin cleanup (if it is safe)
  - initiate evacuation of the area, if necessary
  - initiate reporting actions

- Persons should only attempt to clean up or control a spill if they have received proper training and possess the appropriate protective clothing and cleanup materials. Untrained individuals should notify the appropriate response personnel. In addition to these general measures, persons responding to spills will consult the Emergency Preparedness Plan and the MSDSs or U.S. DOT Emergency Response Guidebook (to be maintained by the construction contractor[s] onsite during all construction activities), which outlines physical response guides for hazardous materials spills.

- In general, expert advice will be sought to properly clean up major spills. For spills on land, berms will be constructed to contain the spilled material and prevent migration of hazardous materials toward waterways. Dry materials will not be cleaned up with water or buried. Contaminated soils will be collected using appropriate machinery, stored in suitable containers, and properly disposed of in appropriately designated and approved areas offsite. After contaminated soil is recovered, all machinery used will be decontaminated, and recovered soil will be treated as hazardous waste. Contaminated cleanup materials (absorbent pads, etc.) and vegetation will be disposed of in a similar manner. For spills, cleanup may be verified by sampling and laboratory analysis at the discretion of the Project Proponent.

- If spilled materials reach water, appropriate materials such as booms and skimmers will be used to contain and remove contaminants. Other actions will be taken, as necessary, to clean up contaminated waters. If construction activity occurs within a wetland with standing water or a flowing stream prior to construction, absorbent booms will be placed on the water surface either around or downstream of the construction zone. For example, during construction of a stream crossing, an absorbent boom would be placed in a flowing stream just downstream of the construction site. In addition to this measure, cleanup materials, including absorbent spill pads and plastic bags, will be placed onsite at flowing streams and “wet” wetlands when construction is occurring within 100 feet of these areas (see also Appendix E – Stormwater Pollution Prevention Plan Framework).

5. SPILL CONTROL AND COUNTERMEASURES

The following section outlines the physical and procedural steps to be taken in the event of a spill to be included in conjunction with any countermeasures identified in the SPCC, if applicable. In general, the construction contractor(s) will oversee all cleanup activities, including providing necessary materials and labor, and performing all reporting and documentation as required. All spills, regardless of quantity, will be reported to the CIC. The responsibilities of the CIC are defined in Section 2.1.3 and Appendix A9 of this POD.

5.1. Physical and Procedural Response Measures

Physical response actions are intended to ensure that all spills are promptly and thoroughly cleaned up. However, the first priority in responding to any spill is personal and public safety. Construction personnel will be notified of evacuation procedures to be used in the event of a spill emergency, including evacuation routes. In general, the first person on the scene will:

- attempt to identify the source, composition, and hazard of the spill
- notify appropriately trained personnel immediately
- isolate and stop the spill if possible, and begin cleanup (i.e., if it is safe)
- initiate reporting actions
- initiate evacuation of the area if necessary

Persons should only attempt to clean up or control a spill if they have received proper training and possess the appropriate protective clothing and cleanup materials. Untrained individuals should proceed first by notifying the appropriate response personnel. In addition to these general guidelines, persons responding to spills will consult the Emergency Preparedness Plan and the MSDS or U.S. DOT Emergency Response Guidebook (to be maintained by the construction contractor[s] onsite during all construction activities), which outlines physical response guidelines for hazardous materials spills.

In general, expert advice will be sought to properly clean up major spills. For spills on land, berms will be constructed to contain the spilled material and prevent migration of hazardous materials toward waterways. Dry materials will not be cleaned up with water or buried. Contaminated soils will be collected using appropriate machinery, stored in suitable containers, and properly disposed of in appropriately designated and approved areas offsite. After contaminated soil is removed, all machinery used will be decontaminated, and removed soil will be treated as hazardous waste. Contaminated cleanup materials (absorbent pads, etc.) and vegetation will be disposed of in a similar manner. For major spills, cleanup may be verified by sampling and laboratory analysis, at the discretion of the Project Proponent.

If spilled materials reach water, appropriate materials such as booms and skimmers will be used to contain and remove contaminants. Other actions will be taken as necessary to clean up contaminated waters. If construction activity occurs within a wetland with standing water or a flowing stream, prior to construction, absorbent booms will be placed on the water surface either around or downstream of the construction zone. For example, during construction of a stream crossing, an absorbent boom would be placed in a flowing stream just downstream of the construction site. In addition to this measure, cleanup materials including absorbent spill pads and plastic bags will be placed onsite at flowing streams and “wet” wetlands when construction

is occurring within 100 feet of these areas (see also Appendix E – Storm Water Pollution Prevention Plan Methodology).

5.1.1. Onsite Equipment

The construction contractor(s) is responsible for designating locations and contents of spill kits to be used during Project construction. The following guidance is provided in developing the contents of a spill kit. The location and minimum inventory for each spill kit must be documented in the Hazardous Materials Management Plan.

Emergency spill response kits will be maintained at all locations where hazardous materials are stored, in sufficient quantities based on the amount of materials stored onsite. Spill response equipment must be compatible with types of materials stored onsite, and should be inventoried regularly to ensure the equipment is adequate for the type and quantities of materials being used. The following are examples of spill response equipment for use in cleanup situations:

- shovels
- absorbent pads/materials
- personal protective gear
- medical first-aid supplies
- bung wrench (nonsparking)
- phone list with emergency contact numbers
- storage containers
- communications equipment

In addition, radios or other communication equipment will be maintained in construction vehicles and other easily accessible locations. Additional cleanup materials may be required, as specified in the SPCC Plan.

5.2. Employee Spill Prevention/Response Training and Education

The construction contractor(s) and subcontractors shall provide spill prevention and response training to appropriate construction personnel (see Occupational Safety and Health Act requirements in Arizona and New Mexico [29 CFR Sec. 1910.1200]). Persons accountable for carrying out the procedures specified herein will be designated prior to construction and informed of their specific duties and responsibilities, with respect to environment compliance and hazardous materials. The training shall inform appropriate personnel of site-specific environmental compliance procedures, and should be completed at least once a year. All training events should be documented, including the date and names of personnel in attendance. These records shall be maintained with the SPCC Plan and/or Hazardous Materials Management Plan. At a minimum, this training shall include the following:

- an overview of regulatory requirements
- methods for the safe handling/storage of hazardous materials
- spill prevention procedures
- emergency response procedures
- use of personal protective equipment
- use of spill cleanup equipment

- procedures for coordinating with emergency response teams
- procedures for notifying agencies
- procedures for documenting spills
- identification of sites/areas requiring special treatment, if any

6. NOTIFICATION AND DOCUMENTATION PROCEDURES

Notification and documentation procedures for spills that occur during Project construction, operation, or maintenance will conform to applicable federal, state, and local laws and regulations. Adherence to such procedures will be the top priority once initial safety and spill response actions have been taken. The following sections describe the notification and documentation procedures, and should be implemented in conjunction with the response procedures listed in the Hazardous Materials Management Plan.

6.1. Required Notification

Notification will begin as soon as possible after discovery of a spill. The individual who discovers the spill will contact the CIC. If the construction contractor(s) determines that the spill may seriously threaten human health or the environment, he/she will orally report the discharge as soon as possible, but no later than 24 hours from the time they become aware of the circumstances, as directed below. A written report must be submitted to the ADEQ or the NMED within 10 days. Prior to initiating notification, the construction contractor(s) (or individual initiating notification) should obtain as much information as possible (see Table A7-1 for standard information requested by agencies).

The following mandatory notifications will be made by the construction contractor(s). Selection and notification to the appropriate government agency(ies) will be based on geographic location of the spill site.

- NMED (for emergencies – 24 hours) 505-827-9329
- NMED (for non-emergencies) 866-428-6535
- ADEQ – Southern Regional Office (Pima, Graham, Greenlee and Cochise counties) – 602-771-2330 (emergencies) 800-234-5677 (toll-free)
- For Pinal County, contact Water Quality Compliance and Inspections – 602-771-4651

The construction contractor(s) will verify and update these emergency phone numbers before and during construction. Additionally, the construction contractor(s) (or other person in charge) will notify the CIC of all spills or potential spills within construction areas.

When a spill poses a direct and immediate threat to health and safety and/or property, the BLM and landowners potentially affected by a spill will be notified directly by the construction contractor(s). Immediate notification is required for all situations in which the spill poses a direct and immediate threat to health and safety and/or property. Failure to report a spill could result in substantial penalties and fines (up to $25,000 per day).

Table A7-1. Standard Spill Information Requested by Agencies
When notifying a regulatory agency, the following information should be provided:
☐ current threats to human health and safety; include known injuries, if any ☐ spill location, including landmarks and nearest access route ☐ reporter's name and phone number ☐ time and spill occurred ☐ type and estimated amount of hazardous materials involved ☐ potential threat to property and environmental resources, especially streams and waterways ☐ status of response actions

6.1.1. Reporting Criteria

The construction contractor(s) and subcontractors are required to report all hazardous materials spills to the CIC. The following reporting criteria apply for petroleum product releases:

- greater than 25 gallons of petroleum products released to land surface
- any petroleum release in or on the groundwater
- greater than 3 cubic yards of petroleum contaminated soil discovered during any subsurface activity
- any release to surface water

The reportable quantities for hazardous substances are based on Federal Environmental Protection Agency guidelines established under 40 CFR 302.

6.2. Documentation

The construction contractor(s) will maintain records for all spills. State and federal agencies that have been verbally notified of a spill will be informed in writing within 10 days for state agencies and 30 days for federal agencies.

The construction contractor(s) shall record spill information in a daily log. The following is a list of items that should be included in the daily log (as appropriate, based on the spill incident):

- time and date of each log entry
- name of individual recording log entry
- list of all agencies notified, including name of individual notified, time, and date
- type and amount of material spill
- resources affected by spill
- list of response actions taken, including relative success
- copies of letters, permits, or other communications received from government agencies throughout the duration of the spill
- copies of all outgoing correspondence related to the spill
- photographs of the response effort (and surrounding baseline photographs, if relevant)

Maintaining detailed and organized records during a spill incident is an important and prudent task. One construction contractor(s) representative should be designated to manage the records for an incident. If extensive spill response and cleanup operations are required, the construction

contractor(s) may choose to assign an individual to assist in the documentation process. This person will track and manage all expenditures (i.e., equipment, personnel/labor hours, and associated resources) and will help supplement the information provided in the daily log book.

7. OPERATIONS AND MAINTENANCE

During the Project's operation and maintenance phase, the Project Proponent will ensure that its facilities, personnel, and contractors comply with federal, state, and local laws and regulations pertaining to the use, storage, transport, and disposal of hazardous materials and adhere to required emergency response and cleanup procedures in the event of a hazardous material spill. Project Proponent and all operations and maintenance subcontractors shall develop hazardous materials management and response plans, as well as properly train employees for handling, packaging, and shipping hazardous materials and responding to hazardous materials spills or emergency events.

Attachment A7: Sample Hazardous Materials Management Forms

CERTIFICATIONS, ACKNOWLEDGMENTS, AND DESIGNATION OF EMERGENCY COORDINATOR

The construction contractor(s) responsible for managing the material yards shall complete and submit the following information:

GENERAL INFORMATION

Business Name

Facility Street Address

			( )
City	County	Zip Code	Phone

Mailing Address (if different)

			( )
City	County	Zip Code	Phone

EMERGENCY COORDINATOR

	( )	( )	( )
Primary Emergency Coordinator Phone	Business Phone	24-hour Phone	Pager/Cellular

	( )	( )	( )
1st Alternate Phone	Business Phone	24-hour Phone	Pager/Cellular

	( )	( )	( )
2nd Alternate Phone	Business Phone	24-hour Phone	Pager/Cellular

* Certification is only necessary if an SPCC Plan is required (see Section 2.1)

SPILL PREVENTION, CONTROL, AND COUNTERMEASURE

The construction contractor(s) shall identify all potential sources of potential spills, including tank overflow, rupture, or leakage. If SPCC requirements are applicable, SPCC information must be included for all containers **with a capacity of 55 gallons or greater** that contain oil, including petroleum, fuel oil, sludge, oil refuse, and oil mixed with waste.

(1) Material:_____Total Quantity:_____
Location of use:_____
Potential direction of flow:_____ Maximum rate of flow:_____
Structures of equipment to contain spills:_____
_____

(2) Material:_____Total Quantity:_____
Location of use:_____
Potential direction of flow:_____ Maximum rate of flow:_____
Structures of equipment to contain spills:_____
_____

(3) Material:_____Total Quantity:_____
Location of use:_____
Potential direction of flow:_____ Maximum rate of flow:_____
Structures of equipment to contain spills:_____
_____

(4) Material:_____Total Quantity:_____
Location of use:_____
Potential direction of flow:_____ Maximum rate of flow:_____
Structures of equipment to contain spills:_____
_____

EMERGENCY CHECKLIST

** DIAL 911 FOR EMERGENCY RESPONSE**

Emergency Coordinator:	_____	( ) _____ (day phone)	( ) _____ (night phone)
First Alternate:	_____	( ) _____ (day phone)	( ) _____ (night phone)
Second Alternate:	_____	( ) _____ (day phone)	( ) _____ (night phone)

_____ _____
Contractor Telephone Number

_____
Address

EMERGENCY NUMBERS

Emergency Response
(Ambulance, Fire, Police, Sheriff, Arizona Department of Public Safety, or New Mexico State Police) 911

Poison Control Center (800) 222-1222

Nearest Hospitals (2) _____ Phone:_____

_____ Phone:_____

Cleanup Contractor _____ Phone:_____

Other (specify) _____ Phone:_____

AGENCY NOTIFICATIONS (to be made by the Project Proponent's environmental manager or environmental field supervisor or emergency response coordinator)

Arizona Division of Emergency Management	1-800-411-2336
Arizona Division of Environmental Protection	602-771-2300 or 800-234-5677
New Mexico Office of Emergency Management	505-476-9600
New Mexico Environment Department	505-827-2855 or 800-219-6157
National Response Center	(800) 424-8802

Other (specify) _____: Phone #:_____

Other (specify) _____: Phone #_____

[Note: The construction contractor(s) shall verify and update the emergency numbers on this page before and during project construction.]

WEEKLY HAZARDOUS MATERIALS/WASTE INSPECTION LOG

For each item listed below, the construction contractor(s) shall indicate whether existing conditions are acceptable (A) or unacceptable (U). Resolution of all unacceptable conditions must be documented. The construction contractor(s) shall inspect all storage facilities on a regular basis, but not less than weekly. The construction contractor(s) shall keep records of all inspections on file.

I. STORAGE AREAS FOR FUELS, LUBRICANTS, AND CHEMICALS

General
A/U

____ Material yard and storage areas secured
____ National Fire Protection Association symbol posted in storage area or at material yard entrance
____ Storage areas properly prepared and signed
____ No evidence of spilled or leaking materials
____ Incompatible materials separated
____ All containers labeled properly
____ All containers securely closed
____ All containers upright
____ No evidence of container bulging, damage, rust, or corrosion
____ Material Safety Data Sheets available
____ Hazardous Materials Management and Spill Prevention Plan available

Secondary Containment Areas
A/U

____ Containment berm intact and capable of holding 110 percent of material stored
____ Lining intact
____ No materials overhanging berms
____ No materials stored on berms
____ No flammable materials used for berms

Compressed Gases
A/U

____ Cylinders labeled with contents
____ Cylinders secured from falling
____ Oxygen stored at least 25 feet away from fuel
____ Cylinders in bulk storage are separated from incompatible materials by fires, barriers, or by appropriate distance

II. HAZARDOUS WASTE MANAGEMENT

Waste Container Storage
A/U

____ No evidence of spilled or leaking wastes
____ Adequate secondary containment for all wastes
____ Separate containers for each waste stream – no piles
____ Waste area not adjacent to combustibles or compressed gases
____ All containers securely closed
____ Bungs secured tightly
____ Open-top drum hoops secured
____ All containers upright
____ No evidence of container bulging, corrosion
____ No severe container damage or rust
____ Containers are compatible with waste (e.g., plastic liner for corrosives, metal liner for solvents)
____ No smoking and general danger/warning signs posted

Waste Container Labeling
A/U

____ Containers properly labeled
____ Name, address, and Environmental Protection Agency ID number or ID Number of generator listed
____ Accumulation start date listed
____ Storage start date listed
____ Chemical and physical composition of waste listed
____ Hazardous properties listed

Nonhazardous Waste Areas
A/U

____ No litter in material yard
____ No hazardous wastes with trash (e.g., contaminated soil, oily rags, or other oily materials)
____ Empty oil and aerosol containers for disposal as non-hazardous waste are completely emptied

III. EMERGENCY RESPONSE EQUIPMENT

A/U

____ Shovels
____ Absorbent material
____ Personal protective equipment (tyvek suit, gloves, goggles and booties, as appropriate)
____ Fire-fighting equipment
____ First aid supplies (e.g., medical supplies, squeeze bottle eye wash)
____ Communication equipment
____ Bung wrench (nonsparking)

IV. CORRECTIVE ACTIONS TAKEN (Required for all unacceptable conditions)

_____

_____

_____

_____

_____

_____

_____

_____

_____

_____

Date: _____**Company (print):**_____

Inspected by (print):_____

Signature:_____

This page intentionally left blank

Appendix A8 – Emergency Preparedness and Response Plan Guidelines

TABLE OF CONTENTS

1. Introduction A8-1
1.1. Purpose and Need A8-1
1.2. Regulatory Compliance A8-1
2. Responsibilities A8-1
3. Response Coordination A8-2
4. Emergency Communications A8-2
4.1. Emergency Contact List A8-2
5. Hazard Identifications and Key Response Criteria A8-2

LIST OF TABLES

Table A8-1. Emergency Contact List A8-3

This page intentionally left blank

1. INTRODUCTION

Emergency Preparedness and Response Plan Guidelines are intended to provide an overview of methods to be implemented, should the need for emergency management become necessary. The existing support structure, chain of command, and emergency communications protocols discussed herein are to be used as a guide for this Plan, to be completed by the Project Proponent's construction contractor(s) and approved by the BLM. Specific emergency procedures for fire, blasting, and hazardous materials are included in Appendices A4 – Fire Protection Plan, A5 – Blasting Plan Methodology, and A7 – Hazardous Materials Management Plan.

Emergency response procedures will be implemented for the following potential events, or similar events:

- downed transmission lines, structures, or equipment failure
- fires
- sudden loss of power
- natural disasters
- serious personal injury

1.1. Purpose and Need

The purpose of an Emergency Preparedness and Response Plan is to provide clear procedures and information that will enable the Project Proponents, construction contractor(s), the CIC, and BLM Authorized Officer to prepare for and effectively respond to emergency situations. The primary objective of the Emergency Preparedness and Response Plan is to prevent adverse impacts to human health and safety, property, and the environment that could potentially occur as a result of the construction, operation, and maintenance of the Project.

1.2. Regulatory Compliance

Health and safety guidelines related to high-voltage transmission lines are provided by a number of sources, including the NESC, American National Standards Institute, American Medical Association Council on Scientific Affairs, American Conference of Governmental Industrial Hygienists, Occupational Safety and Health Administration (OSHA), various state regulations, and other organizations.

2. RESPONSIBILITIES

The Project Proponent and the construction contractor(s) are responsible for the effective response to any emergency situation or event related to the construction, operation, and maintenance of the Project. In order to ensure a coordinated and effective response, a chain of command will be developed as part of the Emergency Preparedness and Response Plan, and followed in the event of an emergency.

3. RESPONSE COORDINATION

The amount of resources and coordination required for response to a specific hazard or emergency is determined by type, severity, location, and duration of the event. Most events require management at the field operations level, and an increase of resource requirements to match the severity and duration of the event. This emergency management organization will be included as part of the Emergency Preparedness and Response Plan.

In the event of an emergency, crews will be dispatched quickly to repair or replace any damaged equipment. Repair of the transmission line will have priority under emergency conditions, and all reasonable efforts will be made to protect plants, wildlife, and other resources. Reclamation procedures following completion of repair work will be similar to those prescribed during construction.

4. EMERGENCY COMMUNICATIONS

Effective communication and exchange of information is essential in every emergency response. Misdirected, incorrect, or untimely information can be detrimental and even increase the threat to life or property. As an emergency event escalates, the rapid increase of information creates chaos and confusion. Simple communication diagrams can help to alleviate this situation.

4.1. Emergency Contact List

In case of emergency, call 911 first. Additional potential emergency contacts are listed in Table A8-1 and should be called, as appropriate, depending on the situation (e.g., fire, injury). Further guidance on emergency response, notification, and reporting protocols are included in Appendix A4 – Fire Protection Plan, Appendix A5 – Blasting Plan Methodology, and Appendix A7 – Hazardous Materials Management Plan.

This Emergency Contact List shall be verified at the beginning of Project construction and updated throughout its duration by the construction contractor(s), to ensure accurate contact information.

5. Hazard Identifications and Key Response Criteria

The right-of-way corridor for the Project can pose potential hazards or threats in association with construction activities. The most effective response to any situation is awareness of the hazard, its potential effects and consequences, and an understanding of the resources and actions necessary to respond. It would be unreasonable to list all the potential hazards and detail each response. Responses to different events may vary as the event evolves, but response methods and responsibilities to be determined in the Emergency Preparedness and Response Plan will be essential for any possible situation.

Effective Emergency Response training is based on plausible scenarios and then developing the understanding, elements, and actions necessary to respond. Scenarios to consider are: electrocution, fatality, massive equipment failure, structure failure, weather/environment, etc.

Table A8-1. Emergency Contact List		
IN CASE OF EMERGENCY Call 911		
FIRE – Call 911 First		
Safford BLM Field Office Call: (928) 348-4400	**Tucson BLM Field Office Call:** (520) 25-7200	**Lower Sonoran BLM Field Office Call:** (623) 580-5500
Socorro BLM Field Office Call: (575) 835-0412	**Las Cruces BLM Field Office Call:** (575) 525-4300	**Roswell BLM Field Office Call:** (575) 627-0272
Rio Puerco BLM Field Office Call: (505) 761-8700	**New Mexico State Forestry Division: (505) 476-3325** Socorro: (575) 835-9359 Capitan District Office: (575) 354-2231	**Arizona State Forestry Division: (602) 771-1400** Tucson: (520) 628-5480 Bureau of Fire Management Officer – Phoenix District: (623) 445-0274
COUNTY SHERIFFS		
Luna County Sheriff: Raymond Cobos (575) 546-0494	**Hidalgo County Sheriff:** Guadalupe "Lupe" Trevino (956) 383-8114	**Sierra County Sheriff:** John Evans (530) 289-3700
Torrance County Sheriff: Clarence Gibson (505) 246-4773	**Lincoln County Sheriff:** R.E. (Rick) Virden (575) 648-2342	**Pinal County Sheriff:** Paul Babeu 1-800-420-8689
Cochise County Sheriff: Larry A. Dever (520) 432-9505	**Pima County Sheriff:** Clarence W. Dupnik (520) 351-4900	**Graham County Sherriff:** Preston J. Allred (928) 428-3141
Greenlee County Sherriff: Steve Tucker (928) 865-4149		
POISON CONTROL		
National: (800) 222-1222 Provides connection to counties		
HOSPITALS AND CLINICS		
In Luna and Hidalgo Counties: Mimbres Memorial Hospital 900 West Ash Street Deming, NM 88030-4098 (575) 546-5886	**In Sierra County** Sierra Vista Hospital 800 East 9th Avenue Truth Or Consequences, NM 87901 (575) 894-2111	**In Torrance County:** Mountainair Family Health Center 105 E. Piñon St. Mountainair, NM 87036 (505) 847-2271

Table A8-1. Emergency Contact List		
IN CASE OF EMERGENCY **Call 911**		
In Pima County: Benson Hospital 450 South Ocotillo Avenue Benson, AZ 85602-6490 (520) 586-2261 OR University Medical Center Tucson, AZ 85724 (520) 694-0111	**In Socorro and Lincoln Counties:** Socorro General Hospital 1202 Highway 60 West, Socorro, NM 87801 (575) 835-1140	
In Cochise County: Northern Cochise Community Hospital 901 West Rex Allen Drive Willcox, AZ 85643-1009 (520) 384-3541	**In Graham and Greenlee Counties:** Mt. Graham Hospital 1600 20th Ave Safford, AZ 85546 (928) 348-4000	**In Pinal County:** Casa Grande Regional Medical Center 1676 East McMurray Boulevard Casa Grande, AZ 85222 (520) 316-0688
HAZARDOUS SPILL RESPONSE AND NOTIFICATION – Call 911 Directly after 911 notification, the following mandatory notifications will be made by CIC. Select and notify the appropriate government agency(ies) based on geographic location of the spill site. Also see Appendix A7 – Hazardous Materials Management Plan.		
Arizona Division of Emergency Management 24 Hours 7 Days Statewide: 1-800-411-2336	**New Mexico** Call National Response Center (24 hours) 1-800-424-8802	**New Mexico Hazardous Waste Bureau:** (non-emergency) (505) 476-6000
Arizona Hazardous Waste Management: (non-emergency) Inspections and Compliance (602) 390-7894	**National Response Center:** (800) 424-8802	
BUREAU OF ALCOHOL, TOBACCO, AND FIREARMS OFFICES		
Albuquerque Field Office: 201 Third Street, Suite 1550 Albuquerque, New Mexico 87102 USA Voice (505) 346-6914 Fax (505) 346-6913	**Las Cruces Field Office:** 1140 Commerce Drive, Ste B Las Cruces, New Mexico 88011 USA Voice (575) 521-2300 Fax (575) 521-2301	**Tucson I Field Office:** 300 W. Congress Street, Room 8B Tucson, Arizona 85701 USA Voice (520) 770-5100 Fax (520) 770-5111
OTHER NUMBERS		

Table A8-1. Emergency Contact List		
IN CASE OF EMERGENCY Call 911		
OTHER NUMBERS		

This Emergency Contact List shall be verified at the beginning of construction and updated throughout the Project by the construction contractor(s) to ensure accurate contact information.

This page intentionally left blank

Appendix A9 – Environmental Compliance Management Plan

TABLE OF CONTENTS

1. Introduction A9-1
2. Environmental Compliance Management Plan Elements and Authority A9-1
3. Roles and Responsibilities A9-2
   3.1. Project Proponent A9-3
   3.2. Bureau of Land Management A9-9
   3.3. Construction Contractor(s) A9-12
4. Environmental Compliance Recording Procedures A9-13
   4.1. Environmental Compliance Levels A9-13
   4.2. Variance Procedures (Project Deviations) A9-16
   4.3. Reporting and Documentation A9-21
5. Communications A9-22
   5.1. Primary Inter-Party Communication Channels A9-22
   5.2. Daily Communications A9-23
6. Project Closeout A9-23
   6.1. End of Construction Project Report A9-24
   6.2. Construction Closeout Meeting A9-24
Attachment A9-1: Organization Chart ..... Attachment A91-1
Attachment A9-2: Variance Request Process ..... Attachment A92-1
Attachment A9-3: Variance Request Form ..... Attachment A93-1
Attachment A9-4: Daily Inspection Form ..... Attachment A94-1
Attachment A9-5: Noncompliance Report ..... Attachment A95-1

LIST OF TABLES

Table A9-1. Summary of Variance Procedures A9-17

1. INTRODUCTION

The BLM will be responsible for enforcement of the terms and conditions of its right-of-way grant on federal land, during the term of the grant. As the lead federal agency, the BLM will approve a third-party CIC to act on behalf of the BLM, providing construction oversight and ensuring compliance with the terms and conditions of the right-of-way grant on federal lands. On non-federal lands, the CIC will inspect and monitor preconstruction and construction activities, document disturbance of the entire Project on all lands analyzed in the EIS and enforce requirements related to BLM responsibilities under the National Historic Preservation Act (NHPA) and the Endangered Species Act (ESA). Additional federal, state, and local permits, as well as private landowner agreements that include conditions to construct and operate the Project, will also be acquired. Because of the Project's potential to impact sensitive environmental resources, required mitigation plans have been developed to minimize these potential impacts.

Project construction requirements and conditions are outlined in the approved plans (including this Project's POD), permits, and right-of-way grants issued for the Project. Their proactive implementation will facilitate timely and efficient construction of the Project, while minimizing impacts on environmental resources. The terms and requirements from the Project permitting and related documents described above are specified in Section 1 and the Appendices of the POD.

2. ENVIRONMENTAL COMPLIANCE MANAGEMENT PLAN ELEMENTS AND AUTHORITY

This Environmental Compliance Management Plan (ECMP) describes how the Proponent will uphold, document, and manage environmental compliance with the terms specified in the right-of-way grant, POD, land owner agreements, and all federal, state, and local permits. It is a centralized Project environmental compliance reference, intended to facilitate environmental compliance across the entire Project, and describes the following essential elements:

- roles and responsibilities of the participants
- comprehensive inspection and monitoring program
- corrective procedures in the event of noncompliance
- standard protocol for variance requests
- reporting process
- comprehensive Project-specific environmental compliance training program

The Proponent's commitment to environmental compliance will be demonstrated by activities prior to, during, and following construction. As with the rest of the POD, the ECMP is intended to be a living document that may be revised as needed throughout the construction process. Because the Project will cross federal and state lands, as well as lands that are owned privately and/or under the jurisdiction of multiple agencies, the ECMP will be applicable for multiple jurisdictional permitting entities and landowners.

Authority for implementation of this ECMP originates from the terms and conditions of the BLM's right-of-way grant and the USFS's special-use permit, POD, Final EIS, ROD, and other conditions associated with nonfederal agency permits. As part of the Proponent's environmental

compliance commitment, the construction contractor(s) will be contractually bound to comply with all laws, regulations, and permit requirements, including the mitigation measures and other specific stipulations and methods set forth in POD, Final EIS, and other permits.

Project specific permitting documents, including but not limited to those identified above, must be reviewed prior to any construction activities to identify all Project-wide and site-specific requirements. These documents will be distributed to the appropriate parties for review, prior to the initial construction kickoff meeting. At that time, a document control system to manage distribution of all documents and revisions will be presented and demonstrated.

As described in Section 2.1.3 of this POD, a third-party CIC will be employed to act on behalf of the BLM to provide onsite compliance inspections and monitoring for the Project and promote environmental protection. The CIC will be hired by the Proponent, with the BLM's approval, prior to BLM offering the right-of-way grant to allow adequate time to review documents and develop on-the-ground familiarity with the Project.

The Proponent will also engage a team of environmental inspectors to ensure compliance with all permit requirements. The environmental inspectors will be an integral part of the Proponent's overall team and will have complete knowledge of all scheduled construction activities occurring at all times and locations. The environmental inspectors' primary focus will be to make certain that all construction activities in all Project segments and phases are performed in accordance with the environmental commitments set forth in the POD, permits, and individual agreements. The environmental inspectors will be of particular importance on non-federal lands, where the CIC has no authority and in some cases, may not be allowed to access the Project right-of-way. In such cases, in addition to monitoring for environmental compliance with the POD, permits, and individual agreements, the environmental inspectors must document all construction activities and Project disturbance that occurs at each work area, which will be included in the total Project disturbance tracking maintained by the CIC (see section 6.1 of this appendix).

Environmental inspectors will be retained by the Proponent, who will then report to the BLM (as indicated in the organizational chart in Attachment A9-1 by the dashed line). Both the BLM and the Proponent will provide direct oversight of the construction contractor's environmental compliance performance, with any specific work direction to the construction contractor(s) coming only from the Proponent. With the exception of stop-work direction due to environmental compliance issues, the CIC will not give any specific work direction to the construction contractor(s). Additional information regarding the construction contractor's role in this ECMP is explained in section 3.3 of this appendix.

3. ROLES AND RESPONSIBILITIES

The following section describes the minimum roles necessary to facilitate environmental compliance with the terms and conditions of the right-of-way grant and the POD; it is not intended to provide direction for management of the Project for the Proponent, construction contractor(s), or BLM. This section also describes the responsibilities, reporting relationships, and roles in executing the ECMP for each entity involved (see Attachment A9-1: Project Implementation Roles). If other parties become engaged in the Project as additional participants, they would be responsible to function and abide by the protocols, terms, and conditions outlined

in this ECMP, and their reporting relationships would be case-specific according to their jurisdiction, expertise, and/or nature of Project involvement.

3.1. Project Proponent

The Proponent will act as holder of all rights-of-way and easements (public and private), and will be the grant holder for the BLM right-of-way. As such, the Proponent is ultimately accountable for adherence to the environmental permit requirements specified in the terms of its agreements and is responsible for ensuring that environmental impacts do not exceed those approved in the Final POD. To facilitate this goal, the Proponent will maintain regular and consistent communication with the CIC, environmental inspectors, and construction contractor(s) to track the success of mitigation and compliance efforts prior to, during, and following construction. As the permit holder, the Proponent is responsible for ensuring that all instances of noncompliance are corrected.

3.1.1. Proponent's Project Manager

The Proponent's project manager is responsible for all aspects of Project execution, completion, and delivery. The Proponent's project manager ensures that effective coordination occurs between the Proponent and the BLM's Authorized Officer, the CIC, and the construction contractor(s)'s project manager to verify that environmental compliance meets the requirements of all applicable laws, permits, and agreements.

The Proponent's project manager also informs the construction contractor(s) they are contractually bound to comply with all of the Project's environmental requirements, including the implementation of the ECMP. Typical daily responsibilities of the Proponent's Project Manager will include, but are not limited to:

- Enforcing construction contractor(s) compliance with all environmental laws and regulations, including the right-of-way grant, POD, permits (federal, state, and local), and landowner agreements during Project construction.
- Managing all Proponent personnel before, during, and after Project construction.

3.1.1.1. Reporting

- Reviewing and evaluating weekly reports.
- Reporting environmental compliance violations to the Proponent's project sponsor, as needed.

3.1.1.2. Variances

- Reviews and approves construction contractor(s)'s written variance requests for submittal to the CIC.
- Delegates authority to approve submittal of construction contractor(s)'s variance requests to the BLM as needed.

3.1.2. Environmental Compliance Manager

The Environmental Compliance Manager will be responsible for implementing the overall environmental compliance of the Project, as stipulated in the POD on behalf of the Proponent. The Environmental Compliance Manager will have stop-work authority in the event of a violation of the procedures or stipulations identified in the right-of-way grant, POD, permits (federal, state, and local), and land owner agreements, as well as the authority to make in-the-field decisions for additional environmental avoidance and/or mitigation issues clearly described in the POD, but that may not have been previously identified in the field (e.g., additional plants requiring salvage, additional noxious weed infestations, sensitive species avoidance areas, etc.). Typical daily responsibilities of the Environmental Compliance Manager will include, but are not limited to:

- Regularly inspecting or coordinating the inspection of construction activities for compliance with all environmental laws and regulations, including the right-of-way grant, POD, permits (federal, state, and local), and land owner agreements, during the length of construction for the Project.
- Managing implementation and completion of all preconstruction and post-construction environmental commitments.
- Attending construction meetings, as needed.
- Coordinating with the Proponent on a daily basis to communicate potential environmental compliance issues, and to discuss schedule and forecasted monitoring workload based on discussions with the construction contractor(s) and CIC.
- Serving as the primary contact and means of communication with the construction contractor(s), CIC, BLM Authorized Officer, and other agency personnel regarding environmental compliance issues and tracking resolution of issues to completion.
- Identifying sensitive resources and areas of concern prior to upcoming construction activities, and coordinating with construction and monitoring personnel accordingly.
- Acting as a resource and technical lead to the environmental inspectors.
- Acting as a resource to construction personnel and explaining environmental regulations and how they are applied in the field.
- Coordinating appropriate corrective actions to resolve noncompliance issues.
- Coordinating with environmental inspectors and construction personnel to provide any necessary information and facilitating regular communication among all parties.
- Inspecting areas of concern identified by environmental inspectors and making appropriate recommendations to construction personnel.

- Coordinating field visits with the construction contractor(s) management and CIC, as necessary.

- Communicating with the Lead Environmental Inspector (see Section 3.1.3) and construction contractor(s) (see Section 3.3) on issues needing resolution in the field.

3.1.2.1. Reporting

- Reviewing daily logs from environmental inspectors for completion and accuracy, and communicating action items or follow-up items to appropriate parties.

- Compiling daily logs into weekly summary reports. Notification of weekly reports will be sent to the appropriate parties (e.g., Environmental Compliance Manager, CIC, construction contractor(s), BLM Authorized Officer, Proponent, etc.).

- Submitting weekly summaries to the CIC, BLM Authorized Officer, and Proponent, documenting construction activities and compliance issues.

- Maintaining centralized storage of daily/weekly environmental inspection reports and making reports available at the request of the BLM Authorized Officer.

3.1.2.2. Variances

- Reviewing and assisting in preparation of written variance requests.

- Ensuring variance requests are complete and accurate prior to submittal to the CIC and/or BLM.

- Communicating variance status to environmental inspectors and construction personnel.

3.1.3. Lead Environmental Inspector

The Lead Environmental Inspector will be primarily responsible for coordinating daily environmental compliance activities and monitoring duties of the Project as stipulated in the POD, including daily direction and positioning of the environmental monitors and resource specialists. The Lead Environmental Inspector will ensure that all environmental inspectors are appropriately staffed, supplied, and positioned. This includes creating weekly monitoring schedules and locations for each of the environmental inspectors, in accordance with the construction schedule and activities for the Project. In addition, the Lead Environmental Inspector will have stop-work authority in the event of a violation of the procedures or stipulations identified in the right-of-way grant, POD, permits (federal, state, and local), and land owner agreements, as well as the authority to make in-the-field decisions for additional environmental avoidance and/or mitigation issues clearly described in the POD but that may not have been previously identified in the field (e.g., additional plants requiring salvage, additional noxious weed infestations, sensitive species avoidance areas, etc.). Typical daily responsibilities of the Lead Environmental Inspector will include, but are not limited to:

- Being on the right-of-way full-time for the duration of the Project, conducting daily inspection of construction activities, and attending construction meetings.
- Coordinating the inspection of all construction activities for compliance with the right-of-way grant, POD, permits (federal, state and local), and land owner agreements, for Project construction.
- Acting as a resource and technical lead to environmental inspectors.
- Acting as a resource to construction personnel, and explaining environmental regulations and how they are applied in the field.
- Serving as a point of contact for the CIC, Proponent, and construction contractor(s) (in coordination with the Environmental Compliance Manager).
- Verifying that construction work areas, access roads, and features such as wetlands or sensitive habitat are properly marked and flagged before work is done in the area.
- Coordinating daily with environmental inspectors to discuss upcoming construction activities, existing and potential problem areas, and potential areas of concern.
- Assigning field monitoring responsibilities to environmental inspectors.
- Coordinating with environmental inspectors and construction personnel to provide necessary information and facilitating regular communication among all parties.
- As needed, inspecting areas of concern identified by environmental inspectors and making appropriate recommendations to construction personnel.
- Communicating with the Environmental Compliance Manager on issues needing resolution in the field, and coordinating appropriate corrective actions to resolve noncompliance issues.
- Reviewing and assisting in preparation of written variance requests.
- Communicating variance status to environmental inspectors and construction personnel.
- Reviewing daily reports and logs from environmental inspectors for completion and accuracy, and communicating action items or follow-up items to appropriate parties.
- Compiling daily reports and logs documenting construction activities and compliance issues for submission to the Environmental Compliance Manager.
- Identifying, documenting, and overseeing corrective actions to resolve noncompliance issues.

3.1.3.1. Reporting

- Reviewing field reports for consistency and accuracy.
- Tracking problem areas and noncompliance reports, and ensuring follow-up and resolution reports are filed.
- Documenting the resolution of any compliance issues in daily reports.

3.1.3.2. Variances

- Reviewing and assisting in preparation of written variance requests, as needed.
- Tracking progress and completion of any required field surveys (biological resources, cultural resources, etc.) and technical reports to support variances.
- Tracking variances and communicating variance status with the construction contractor(s).
- Processing and archiving variances.

3.1.4. Environmental Inspectors

Environmental inspectors for the Project will monitor and report on construction-related activities with respect to the general permit requirements of the BLM (as stipulated in the Final POD), Proponent, and other cooperating/permitting agencies; as well as monitor and report on construction-related activities in areas of pre-determined biological, cultural, and paleontological sensitive resources. Among the environmental inspectors' primary responsibilities will be to locate and facilitate protection and/or avoidance of environmentally sensitive resources such as migratory bird and raptor nests (see Appendix B1 of this POD), rare plants and noxious weeds, high sensitivity paleontological resources (see Appendix C2 of this POD), and National Register of Historic Places (NRHP)-eligible cultural resources, as well as provide monitoring of construction activities within specific areas requiring protection (e.g., segments of the right-of-way in high sensitivity paleontological areas, cultural resource sites required by the BLM, biological requirements, etc.). In addition, environmental inspectors will monitor and report general environmental compliance by the construction contractor(s) and sub-contractors to the Proponent, regarding proper implementation of Section 6, Appendices A1–A7, Appendix D, and Appendix F of the Final POD, with particular attention to fire, dust, hazardous materials, and restoration guidelines.

While the length and type of construction activities will determine the necessary number of environmental inspectors to facilitate Project compliance, each environmental inspector will be retained and assigned to the Project according to his resource specialty. Each environmental inspector will oversee the proper implementation of their specialty resource requirements identified in the Final POD and other environmental documents including, but not limited to, biological resources, cultural resources, paleontological resources, fire, dust, hazardous materials, and restoration requirements, as appropriate.

Upon completion of Project facility construction activities, environmental inspectors will monitor the implementation of the appropriate restoration treatments as stipulated in Appendix F of the Final POD. The CIC and BLM Authorized Officer must approve site stabilization/restoration, before construction activities are considered complete for the Project.

The environmental inspectors will report directly to the Lead Environmental Inspector, and will submit daily detailed monitoring records and photo logs. The environmental inspectors will be in daily contact with the CIC, under the direction of the Lead Environmental Inspector and Environmental Compliance Manager, to ensure the Final POD is properly implemented.

Typical daily responsibilities of the environmental inspectors will include, but are not limited to:

- Assisting in inspection of construction activities for compliance with the right-of-way grant, Final POD, permits (federal, state and local), and land owner agreements, for construction of the Project.
- Conducting daily inspections of construction activities.
- Identifying sensitive resources and areas of concern prior to upcoming construction activities, and coordinating with construction personnel to discuss.
- Acting as a resource to construction personnel to explain environmental regulations and relevant application to construction activity.
- Verifying that construction work areas, access roads, and environmentally sensitive features have been properly marked and flagged before work is initiated in the area.
- Ensuring that erosion control or other best management practices do not inadvertently cause impact to other sensitive resources.
- Acting as a point of contact for the CIC.
- Informing the construction contractor(s) of all potential and existing compliance issues, and coordinating with the Lead Environmental Inspector to determine appropriate corrective actions.
- Coordinating with the Environmental Compliance Manager and/or Lead Environmental Inspector for potential stop-work when construction activities violate the environmental conditions of the right-of-way grant, permits, or landowner conditions.
- Identifying, documenting, and overseeing corrective actions to resolve noncompliance issues.
- Monitoring and documenting restoration activities.
- Documenting the resolution of any compliance issues in daily reports.

3.1.4.1. Reporting

- Maintaining and submitting daily reports and logs to the Lead Environmental Inspector that document construction activities and associated compliance status for that day.
- Document the resolution of any compliance issues in daily reports.

3.2. Bureau of Land Management

The objective of the BLM is to ensure right-of-way grant compliance during construction, operation, and maintenance phases. The CIC shall represent the BLM in this matter, and ensure environmental impacts do not exceed those analyzed in the Final EIS and ROD, and approved in the Final POD. The CIC assists the BLM by providing regular and consistent field observations, documenting his findings, processing and approving Minor Variance requests, and working with the Proponent and construction contractor(s) to identify compliance issues and maintain compliance during construction of the Project.

3.2.1. Authorized Officer

The BLM will serve as the lead federal agency, and will designate a project manager (authorized federal officer) who will provide oversight for the Project. The BLM Authorized Officer will, on behalf of the BLM, be responsible for administering and enforcing the right-of-way grant and permit provisions for the BLM. They will also ensure that mitigation measures and conditions of approval contained in the Final POD are adhered to during Project construction, operation, and maintenance. The BLM Authorized Officer will be responsible for writing stop-and-resume work orders, and resolving any conflicts that arise relating to the Project on land administered by the BLM. Compliance will be monitored by the BLM Authorized Officer and other BLM resource specialists as needed, in conjunction with the CIC.

If any additional environmental compliance oversight representative is required by agencies other than the BLM, their responsibilities would be consistent with those outlined for the BLM and CIC in this ECMP, although their authority and enforcement would be solely applicable in their respective agency's area of jurisdiction.

Typical responsibilities of the BLM Authorized Officer will include, but are not limited to:

- Ultimate authority and decision maker for issues pertaining to the BLM's right-of-way grant.
- Enforcing the Proponent's compliance with all environmental laws and regulations, including the right-of-way grant, Final POD, and federal permits during Project construction.
- Ensuring that right-of-way grant compliance during construction is done in a manner that facilitates timely and efficient construction, while protecting the public interests and the environment.
- Managing the project CIC.

- Coordinating with BLM resource specialists for technical expertise and input.
- Determining, in coordination with others, if any environmental noncompliance events, for which the Proponent is accountable, qualify as violations to the terms and conditions of the right-of-way grant.
- Informing the Proponent of any right-of-way violations due to environmental noncompliance, and enforcing their remedy.
- In accordance with 43 CFR 2807.17(a), suspending or terminating the right-of-way grant if the Proponent and/or its construction contractor(s) does not comply with applicable laws and regulations or any terms, conditions, or stipulations of the grant (e.g., excessive or continuous noncompliance activities that demonstrate a willful disregard for right-of-way grant(s) terms and conditions.
- Issuing BLM Project decisions.

3.2.1.1. Reporting

- Compiling or directing others to compile all Project reports for the Project Administrative Record.

3.2.1.2. Variances

- Authorizing approval of major variances or designating authority to other BLM representatives for approval.

3.2.2. Compliance Inspection Contractor

The CIC is an on-the-ground agent of the BLM and other cooperating agencies, retained by the Proponent, and provides onsite compliance inspections and monitoring for the Project. This service helps to promote environmental protection and ensures compliance with the lead federal agency's requirements (including any cooperating agency requirements), based on the commitments as established in the Final POD. The CIC will report directly to the BLM, who will coordinate with other cooperating agencies, where appropriate.

The CIC will work under the direct supervision and control of the BLM. No direction with respect to time, place, or manner of conducting monitoring shall be taken from the Proponent or construction contractor(s), provided that the CIC and the Proponent work together to ensure the Project's timely and effective construction. If the CIC determines an action is in noncompliance, the CIC has the authority to issue an immediate temporary suspension or work stoppage order (WSO) for that specific work activity. However, all efforts shall be made to coordinate closely with the Proponent and construction contractor(s) to report and document compliance concerns not otherwise identified by these parties, giving them the opportunity to resolve the concerns. Every effort shall be made to limit any work stoppage to situations involving immediate threats to sensitive resources or emergency situations. The CIC is not otherwise authorized to direct work undertaken by the construction contractor(s). If any additional environmental compliance

oversight representative is required by agencies other than the BLM, their responsibilities would be consistent with those outlined for the BLM and CIC in this ECMP, although their authority and enforcement would be solely applicable in their respective agency's area of jurisdiction.

It is not the role of the CIC to direct the work of either the Proponent or the construction contractor(s). Rather, the CIC's primary role is to observe work activities and bring noncompliant situations to the attention of the appropriate party, and offer recommendations on how to prevent noncompliance.

Typical responsibilities of the CIC will include, but are not limited to:

- Representing the BLM in the field for compliance activities.
- Verifying and reporting the Proponent's compliance with all environmental requirements, and tracking all reported noncompliance events and resolutions.
- Tracking all Project construction disturbance for inclusion in an End of Construction Project Report (see Section 6 of this ECMP)
- Reporting directly to the BLM Authorized Officer (or designee).
- Remaining assigned to the Project through completion of construction (including initial restoration activities per Appendix F of the Final POD) or termination of the Project, unless redirected by BLM.
- Reviewing and understanding the right-of-way grant, Final POD, and all other Project-specific environmental documents (to be delivered upon award of the CIC contract).
- Maintaining copies of the right-of-way grant and Final POD in their possession while on the right-of-way.
- Performing compliance monitoring work in the field and from the CIC's office. At a minimum, the CIC or designated monitors are required to be on the right-of-way when activities involving the use of construction equipment have the potential for significant surface disturbance or harm to sensitive resources. Exceptions can be made should the CIC, using professional judgment, determine that reductions in presence would not adversely impact compliance oversight (e.g., when Project phases have approached conclusion, or when onsite activities are minimal).
- Coordinating regular compliance monitoring during construction.
- Discussing any potential compliance issues with the construction contractor(s)'s staff as soon as possible.
- Providing recommendations to the BLM Authorized Officer on ways to resolve or prevent noncompliance issues.
- Meeting weekly with the BLM Authorized Officer (or designee), in person or by telephone, to review construction activities and the status of compliance.

- Communicating regularly with Proponent and Environmental Compliance Manager.
- Coordinating compliance activities with the Proponent and Environmental Compliance Manager.
- Coordinating variance requests with the BLM Authorized Officer, Proponent, and Environmental Compliance Manager.
- Participating in supplemental meetings, as necessary, with the BLM Authorized Officer and Proponent.
- Conducting the final route review and developing final report documenting the status of the right-of-way and the final construction disturbance numbers.
- Performing activities as instructed by the BLM Authorized Officer.

3.2.2.1. Reporting

- Documenting all instances of noncompliance, or other problems that would reasonably be expected to result in environmental impacts. This may include staking, flagging, or photographing problem areas, verifying locations with GPS, and comparing them to the right-of-way grant and Final POD map volumes as specified in the ECMP.
- Providing weekly summary reports of compliance inspection to the BLM. Weekly reports shall summarize the prior week's activities and include a brief description of construction activities, compliance issues, any additional acreage disturbed resulting from variances, corrective actions taken, and any foreseeable issues.
- Participating in all preconstruction meetings, safety meetings, safety training, environmental training, and other meetings called by the BLM, Proponent, or construction contractor(s) that involve environmental compliance aspects of the Project. The CIC is responsible for preparing meeting notes that highlight all decisions made during these meetings.

3.2.2.2. Variances

- Coordinating as necessary with the BLM Authorized Officer to review and approve variance requests.
- Authorizing approval of minor variances or designating authority to others, as delegated and approved by the BLM.

3.3. <u>Construction Contractor(s)</u>

The construction contractor(s) will be contractually bound to comply with all laws, regulations, and permit requirements, including the mitigation measures and other stipulations and methods set forth in the right-of-way grant, Final POD, and ROD throughout all phases of the Project. All

construction personnel will participate in environmental trainings and work with the Proponent's environmental inspectors to build the Project safely and in compliance with the environmental protection measures identified in the Final POD. Should a noncompliance situation occur, the construction contractor(s) will cooperate with the direction of the CIC and BLM, and will implement a solution as soon as possible to return the Project to a compliant condition.

It is not the intent of this ECMP to determine the anticipated positions necessary for the construction contractor(s) to successfully complete construction of the Project (see Section 4.2, Table 4-1 of the POD); however, the construction contractor(s) will be required to maintain and facilitate compliance with the environmental protection measures identified in the Final POD, and to ensure appropriate Project communication between the construction contractor(s), CIC, BLM, Proponent, and environmental inspectors.

4. ENVIRONMENTAL COMPLIANCE RECORDING PROCEDURES

This section describes the general recording procedures for environmental compliance to be implemented on a daily or as needed basis during construction activities for the Project. While daily construction and monitoring activities will vary throughout the construction phase of the Project, recording procedures, compliance determinations, and variance requirements will remain constant for all construction activities in accordance with the environmental regulations identified in the right-of-way grant, Final POD, ROD, and other environmental documents specific to the Project. Specifically, this section addresses Project compliance levels and Project variances for construction activities.

4.1. Environmental Compliance Levels

Each construction spread and activity will be monitored (as appropriate), inspected, and documented in a daily report. This report will assign an environmental compliance level for the day's construction activity, as defined below. In determining the environmental compliance level, the environmental inspectors, CIC, Environmental Compliance Manager, and Lead Environmental Inspector will assess construction activities based on the extent and nature of actual impacts on a resource, the potential for additional impacts to a resource, the intent behind the action, and the history of occurrence of a potential noncompliant situation.

4.1.1. Compliant

All construction activities are in compliance with the environmental requirements stipulated in the right-of-way grant, Final POD, and other project environmental permits, and will be documented as compliant for the day.

4.1.2. Problem Area

A problem area is a construction location or construction activity that does not meet the definition of compliant, but is not in noncompliance. The problem area category can be used in a variety of situations, including:

- A minor incident that is corrected in a timely manner (generally within the same construction work day), as determined by the CIC and/or BLM Authorized Officer.

- A location where the Project is not in direct noncompliance, but is one where the inspector or CIC determines that damage to a resource could occur if corrective actions are not taken.

- An activity that is isolated and determined unintentional that causes no direct damage to a resource.

If a problem area is corrected in a timely manner, it will not be considered a noncompliance. If a problem area is found to be a repeat situation or has happened in multiple locations or is not corrected within an agreed upon time frame, the environmental inspector, CIC, Environmental Compliance Manager, or Lead Environmental Inspector may document the situation as a noncompliance one. The environmental inspector, CIC, or Environmental Compliance Manager or Lead Environmental Inspector will inform the lead construction contractor(s) employee onsite of the problem area before issuing a noncompliance determination, and will discuss appropriate procedures for its prompt correction. Environmental inspectors will document problem areas and their corrections in daily monitoring reports. Problem areas identified by the CIC will be reported to and discussed with the environmental inspectors, Environmental Compliance Manager, and Lead Environmental Inspector, for attention in their appropriate construction areas. If the problem area is not corrected in the agreed upon time frame, resource damage occurs, or similar problem area activities occur repeatedly, a noncompliance report may be issued.

4.1.3. Noncompliance

A noncompliance report will be issued when construction activities violate the Project's environmental requirements, result in damage to a resource, or place sensitive resources at unnecessary risk (as determined by the CIC and/or BLM Authorized Officer). Factors that contribute to noncompliance will be the extent of damage to the resource, the intent of the action, and the determination of the action being a repeat occurrence. A noncompliance report may also be issued for direct disregard for Project requirements that do not directly cause harm to sensitive resources (e.g., using unapproved access roads, construction activities resulting in disturbance outside of established Project boundaries, etc.).

Should the CIC observe a noncompliant activity, they will notify the Environmental Compliance Manager and Lead Environmental Inspector, and the lead construction contractor(s) employee onsite immediately to discuss the noncompliance situation prior to issuing a noncompliance report. If a noncompliance report is issued, it will include the name of the lead construction contractor(s) employee at the site of the noncompliance, the noncompliance situation, date, and time of the determination. Unless otherwise specified by the CIC, work at the site of the noncompliance situation will temporarily stop until the noncompliance is corrected. A resolution report will be filed documenting its resolution. The monitor will inform the construction contractor(s) and the Proponent of the noncompliance.

If the environmental inspectors observe a noncompliance, they will notify the lead construction contractor(s) employee onsite immediately. The environmental inspector will also notify the

Lead Environmental Inspector and/or the Environmental Compliance Manager, and CIC of the noncompliance activity. Unless otherwise specified by the CIC, work at the site of the noncompliance situation will temporarily stop until the noncompliance is corrected. The environmental inspector will document the noncompliance in the daily monitoring report, which will be filed with the Lead Environmental Inspector. The Lead Environmental Inspector will submit all noncompliance reports and reports documenting resolution to the Environmental Compliance Manager, CIC, and BLM Authorized Officer.

The environmental inspectors, Environmental Compliance Manager, and/or Lead Environmental Inspector will coordinate to establish the appropriate corrective actions and time frames for the resolution of noncompliance. The environmental inspectors will be responsible for communicating the corrective actions to the lead construction contractor(s) employee onsite. If necessary, the CIC, Environmental Compliance Manager, and the construction contractor(s) will determine the level of retraining for the crew involved. Following a noncompliance, the CIC, construction contractor(s), Environmental Compliance Manager, environmental inspector, and Proponent will discuss the noncompliance situation and how to best implement measures to prevent a recurrence.

4.1.4. Response to Noncompliant Activities

If resolution of a noncompliance is not achieved through the process described above, the following may occur:

4.1.4.1. Temporary Suspension

For incidents of noncompliance by the Proponent or the construction contractor(s) that remain unresolved after the notifications described in section 4.1.3, the CIC or BLM Authorized Officer may issue a temporary suspension to halt specific activities or all activities in a localized work area. The temporary suspension shall be issued orally and in writing to the Proponent's project manager or designee, and the Proponent shall immediately provide notice of the temporary suspension to the construction contractor(s).

4.1.4.2. Work Stoppage Order

In the event of serious noncompliance that could reasonably be expected to result in a risk of death or harm to persons, or repeated violations of environmental requirements that have a detrimental effect to sensitive resources, a WSO will be issued by the CIC or BLM Authorized Officer. A WSO will temporarily suspend all construction activities at the noncompliant construction spread and may be issued orally or in writing to the Proponent by the CIC or BLM Authorized Officer.

A conference call will be held with the CIC, BLM Authorized Officer, Proponent, Environmental Compliance Manager, and construction contractor(s) within 24 hours to discuss the noncompliance incident requiring a WSO and, if necessary, a face-to-face meeting will be scheduled to resolve the incident. Should a face-to-face meeting be warranted, it will be held with all parties to discuss the noncompliance resolution within 24 hours of the initial conference call (excluding weekends and federal holidays). Upon successful resolution (including

documentation) of the noncompliance situation, the Proponent may file a written request to the BLM to resume construction activities. The BLM shall review and respond to the Proponent's written request to resume activities, within 24 hours after receipt. The BLM's response shall either approve the request or provide additional criteria that must be met, prior to resumption of construction activities. Any additional noncompliance resolution criteria must cite the applicable law(s), agreement (s), and/or permit requirements. No construction activities shall be undertaken (except emergency or safety-related) until formal approval of the noncompliance situation is provided by the CIC or BLM Authorized Officer.

4.1.4.3. Grant Suspension or Termination

In accordance with 43 CFR 2807.17(a), the BLM may suspend or terminate the right-of-way grant if the Proponent and/or its construction contractor(s) does not comply with applicable laws and regulations or any terms, conditions, or stipulations of the grant (e.g., excessive or continuous noncompliance activities, which demonstrate a willful disregard for right-of-way grant(s) terms and conditions). Prior to suspension or termination, the Proponent will be notified in writing and allowed a reasonable opportunity, as determined by the BLM Authorized Officer, to correct any noncompliance pursuant to 43 CFR 2807.18(a); and, if applicable, provided a hearing pursuant to 43 CFR 2807.18(b).

4.2. Variance Procedures (Project Deviations)

The intent of this section is to inform the Proponent, the BLM, construction contractor(s), and other Project personnel of the variance request process in order to minimize potential costly construction delays. It is understood by the BLM and Proponent that unforeseen circumstances will likely occur during construction. The need for realignments to the proposed route, access roads, and/or work areas that are not within the permitted Project right-of-way and EIS analysis may arise. In addition, the need to make changes to construction procedures, schedule, and/or approved mitigation measures and other specific stipulations and methods may be required. Under these or similar circumstances on nonprivate lands, a variance will need to be filed and approved by the BLM to stay in compliance.

Where Project changes occur on private lands, including changes to the Project route, access roads, work areas, construction procedures, schedule, mitigation measures, or other stipulations agreed upon in private land easements, written approval of the Project change from the affected landowner to the Proponent must be obtained and provided to the CIC for inclusion in the Project record and End of Construction Project Report (see section 6 of this ECMP). The remainder of this section pertains to Project changes on nonprivate lands.

Variance requests will be generated by the construction contractor(s) and provided in writing to the Proponent, who will then review the request. The construction contractor(s) will provide a brief description of the variance, the need for it, and a copy of the Final POD map sheet showing the location of the proposed change. In addition, the construction contractor(s) will include a field review by the environmental inspectors assessing the potential effects to cultural, biological, paleontological, or other resources, as appropriate. The Proponent will evaluate the variance request and submit it and the supporting documentation to the CIC.

The CIC is responsible for providing supporting documentation and an on-the-ground perspective of the requested variance to the BLM Authorized Officer or designee. The CIC is given authority by the BLM to approve a Level 1 variance in the field. In addition, upon consulting with the BLM Authorized Officer, the CIC is also given the authority to approve a Level 2 variance. Authority to approve or deny Level 3 variance requests rests with the BLM Authorized Officer or designee. (See Attachment A9-2: Variance Request Process).

A variance request form will be developed by the construction contractor(s), reviewed and approved by the Proponent, and then reviewed and approved by the BLM prior to the start of construction. The variance request form will be incorporated into the preconstruction environmental training program, and will describe the variance request in detail, provide justification and documentation for the variance (including maps and photos, calculation of the proposed permanent or temporary acreage affected), describe the original disturbance acreage analyzed in the EIS/POD, and show the difference in acreage between the proposed variance and the original disturbance. It will also describe any potentially impacted resources and identify if additional resource surveys will be required.

The variance may be implemented in the field as soon as the approved variance is received by the construction contractor(s). The CIC is responsible for communicating with the Proponent regarding variance status, and the Proponent is responsible for communicating with the construction contractor(s) prior to modifications being made on the ground.

Table A9-1 summarizes the different variance levels, potential uses, and approvals required in order to obtain the Project variance.

Table A9-1. Summary of Variance Procedures

Variance Level	Potential Use	Approval
Level 1	Minor field adjustments	CIC
Level 2	Modify POD	CIC w/concurrence of BLM Authorized Officer
Level 3	Amend right-of-way grant	BLM Authorized Officer

4.2.1. Level 1 Variance – Variances Accomplished through Field Resolution

A Level 1 variance is a minor field adjustment within the approved BLM right-of-way grant that conforms to the Final POD. The CIC has been given authority by the BLM to approve these variances in the field in consultation with the Proponent's Environmental Compliance Manager. However, the desired adjustments or deviations would be documented in a variance request form for inclusion in the Project record. The CIC would inform the Proponent's Environmental Compliance Manager and the BLM Authorized Officer of these minor changes by including any changes in that week's progress report.

Examples of minor field adjustments include, but are not limited to, the following:

- Relocating erosion control devices (this could also require a modification to the Stormwater Pollution Prevention Plan [SWPPP])
- Locating temporary fences inside authorized work areas
- Permitting water bars to be extended, if applicable, off the area designated for the transmission line, and into native vegetation "one dozer length" (this includes providing permission for construction equipment to work outside designated work areas)
- Allowing rubber-tired vehicles to use additional designated access roads (in addition to those approved in BLM approval documents) where improvements to the road would not be necessary (not intended for authorizing additional haul roads for equipment and materials)
- Temporarily (7 days or less) placing transmission structure parts or other assemblies outside areas designated in the Final POD, but within the authorized Project area. This does not include any surface disturbance associated with temporary storage.

Level 1 Variance Approval or Denial

A CIC can approve or deny Level 1 variance requests in the field, if the results of implementing the changes are not significant. In some cases, the CIC may consult with the BLM Authorized Officer. If a Level 1 request is approved by the CIC, signatures on the variance request form (see Attachment A9-3) will also be required from the Proponent's project manager or delegate. Once approved and signed by the CIC, a Level 1 variance can be implemented in the field. The CIC will document the approved variance in the daily reports.

If a Level 1 variance is denied, the CIC will inform the Proponent's project manager within 24 hours. The Proponent's project manager may then choose to resubmit the request as a Level 2 variance, or to discontinue pursuit of the request.

Level 1 Variance Distribution

The CIC will give/send the approved Level 1 variance request to the Proponent's project manager, who will then distribute the variance on the construction side of the Project. The CIC will provide the BLM Authorized Officer with copies of approved Level 1 variances on a daily basis, and will generate a report at the end of each week identifying all Level 1 variances approved during the previous week.

4.2.2. Level 2 Variance – Variances beyond Field Resolution, Not Requiring an Amendment to the Right-of-Way Grant

Level 2 variances pertain to requests that exceed the field decision authority of the CIC, and which require approval by the BLM Authorized Officer, with concurrence of BLM resource specialists. These requests generally involve Project changes that would affect an area outside of the previously approved work area, but within the area previously surveyed and/or analyzed for

cultural resources, Section 404 of the Clean Water Act, and paleontological and biological resources. Such variance requests typically require review of supplemental documents, correspondence with additional agencies or jurisdictions, and records to be provided with the request. Examples include, but are not limited to the following:

- Shifting extra workspace outside the approved construction corridor, but within the area previously surveyed where overall disturbance type and acreage remains approximately the same, and no additional cultural, paleontological, biological resources, or invasive weed infestations could be affected
- Using additional extra workspace outside of the previously approved work areas (within or outside the Project right-of-way)
- Shifting temporary workspace to previously disturbed areas
- Allowing construction or maintenance activities to be conducted in Project areas when seasonal restrictions are in place (see Appendix B1 of this POD)
- Moving proposed culvert location(s), to better accommodate natural drainages (may also require a modification to the SWPPP)
- Providing extra work space for topsoil and spoil material storage to prevent mixing of soils
- Moving a range fence a specified distance laterally, and permanently installing it to avoid proposed construction (this may also require an amendment to the Allotment Management Plan, if applicable)
- Modifying seed mixes specified in the POD, typically due to unavailability (may also require a modification to Appendix F of this POD
- Modifying an access road due to safety hazards

Variance requests may also be submitted for minor changes that would extend beyond the previously surveyed work area and corridor for sensitive resources. In these situations, additional cultural, biological, noxious weed, and/or paleontological surveys may be required. Documentation of any applicable survey and other applicable correspondence would need to be submitted with the variance request. If sensitive biological or cultural resources are encountered during the additional surveys, documentation of consultation with applicable agencies (e.g., U.S. Fish and Wildlife Service [USFWS], Arizona Game and Fish Department [AZGFD], New Mexico Department of Game and Fish [NMDGF], Arizona or New Mexico SHPO, etc.) must be provided with the variance request. All BLM-approved stipulations, and if applicable the Terms and Conditions of the USFWS BA/BO (Biological Opinion), must be adhered to in order for the variance to be approved.

To initiate a Level 2 variance request, the Proponent's project manager will determine the need for the variance. The request form, with attached supporting documents, will be submitted by the Proponent's project manager to the CIC for review. Following this review, the CIC will submit

the request form and attachments to the BLM Authorized Officer, who then will provide the Proponent's project manager through the CIC written approval or denial (including an explanation) of the request by using the spaces provide on the form. The BLM Authorized Officer or BLM representative may request additional information, or a modification of the request, before the variance can be approved. In addition, the Proponent's project manager will be informed if an amendment to the BLM right-of-way grant will be required.

Level 2 Variance Approval or Denial

The BLM Authorized Officer will review the variance request form and any attachments, in consultation with the appropriate BLM resource specialists. If additional information or a modification to the request is required, the Proponent's project manager will submit the requested information within 5 business days to the BLM Authorized Officer, who will then provide the Proponent's project manager with written approval of the request by using the space provided on the form, within 5 business days of receipt for a complete request.

If a Level 2 variance is denied, the BLM Authorized Officer will provide the Proponent's project manager a written explanation for the denial of the request, by using the spaces provided on the form within 5 business days from receipt of a complete request. The Proponent's project manager may choose to resubmit the request as a Level 3 variance request, or to discontinue pursuit of the request.

Level 2 Variance Distribution

The CIC will give/send the approved Level 2 variance request to the Proponent's project manager, who will then distribute the variance on the construction side of the Project. The CIC will provide the BLM Authorized Officer copies of approved Level 2 variances daily, and will generate a report at the end of each week identifying all Level 2 variances approved during the previous week.

4.2.3. Level 3 Variance – Variances Requiring an Amendment to the Right-of-Way Grant

The BLM Authorized Officer will assist the CIC and Proponent in determining whether a significant proposed change, outside the approved BLM right-of-way grant, will necessitate submittal of an amendment, or whether the change can be handled with a Variance Request Form.

An example of a variance requiring an amendment to the BLM right-of-way grant is presented below:

Any proposed construction modification that the BLM Authorized Officer and CIC have determined to involve substantial deviations from the right-of-way grant will require a grant amendment, in accordance with 43 CFR 2807.20. A variance requiring an amendment to the right-of-way grant requires completion of an application on a Standard Form 299, and a decision by the BLM Authorized Officer. The Proponent's project manager will prepare the Standard Form 299 with supporting documentation, including but not be limited to a POD and map of the

variance area (1:24,000 scale), and will forward it to the appropriate BLM office. The BLM will process the amendment application pursuant to 43 CFR 2800 and 36 CFR _____. The BLM may request additional information, or a modification of the request, before the amendment can be approved.

Grant amendments will be reviewed by BLM staff who will consult with other federal, state, and local agencies as needed. Grant amendment approvals or denials will come directly from the BLM. Approval of the grant amendment also requires issuance of a Notice to Proceed (NTP) addressing the amendment, should it be a requirement of the original right-of-way grant. Examples of grant amendment requests include:

- Route realignments or facility relocations onto BLM land not analyzed in the EIS and included in the right-of-way grant
- Expansion of the Project area defined in the right-of-way grant and Final POD
- Requests affecting sites potentially eligible for the NRHP or involving state or federally protected species or their habitat

4.3. Reporting and Documentation

There will be multiple forms and reports that are completed on a regular basis during the course of construction. The reports and forms will include:

- Daily Monitoring Record – At the end of each construction day, environmental inspectors will fill out daily monitoring records to document environmental compliance of the day's construction activities, with respect to environmental compliance. Photo documentation of construction activities for the day will also be included, as appropriate. Environmental Inspector reports will be submitted to the Lead Environmental Inspector and will be available to the BLM upon request. See Attachment A9-4: Daily Inspection Report Form for an example form.
- Weekly Summary Reports – The Lead Environmental Inspector will produce a weekly report documenting the week's activities and compliance issues, to be submitted to the Proponent and the CIC, and will be available to the BLM upon request. The CIC will submit a weekly compliance report to the BLM to be delivered to a secured website.
- Variance Request Forms – Variance requests will be produced by the construction contractor(s), reviewed by the Proponent, and submitted to the CIC for review before submittal to the BLM for approval. It is critical that these forms include the proper accompanying documentation (photos, maps, alignment sheet exerts, drawings, etc.). The Proponent's Environmental Compliance Manager will track, distribute, and archive all approved and denied variances. See Attachment A9-3: Variance Request Form for an example form.
- Problem Area Report Forms – This section of the daily report will capture all information pertaining to a problem area documented that day. Photo documentation is required. A

separate resolved problem area report may be required if the problem area is not resolved on the same day.

- Noncompliance Report Form – This section of the daily report will capture all information pertaining to a noncompliance documented that day. Photo documentation is required. A separate resolved noncompliance report may be required if the noncompliance is not resolved on the same day. See Attachment A9-5: Noncompliance Report Form.

- Weekly Training Log – As necessary, a training log with the names and signatures of all employees that went through environmental training that week will be compiled and distributed by the Environmental Compliance Manager. The weekly training log will be distributed to the Lead Environmental Inspector, CIC, BLM Authorized Officer, construction contractor(s), and Proponent.

5. COMMUNICATIONS

Communication between all parties is critical to maintain environmental compliance throughout Project Construction. As specified in Appendix A2 of the POD, the construction contractor(s), CIC, and all environmental inspectors will maintain a communications network that consists of one or both of the following devices: two-way radios or cellular phones. This will allow for immediate coordination between all parties, which will facilitate resolution of any questions and/or monitoring requirements prior to or during construction activities. Oral communication will not be an acceptable substitute for written approvals.

5.1. Primary Inter-Party Communication Channels

The following relationships are not intended to limit communication on the Project, but demonstrate the primary channels of routine communication between parties for compliance related issues.

- **BLM Authorized Officer** – CIC, Environmental Compliance Manager, and Proponent's project manager

- **CIC**: BLM Authorized Officer, Environmental Compliance Manager, Lead Environmental Inspector, Environmental Inspectors, Proponent's project manager, and lead construction contractor(s) employee at each construction spread

- **Proponent's Project Manager**: construction contractor(s), BLM Authorized Officer, CIC, and Environmental Compliance Manager

- **Environmental Compliance Manager**: Lead Environmental Inspector, BLM Authorized Officer, CIC, lead construction contractor(s) employee at each construction spread, environmental monitors and resource specialists

- **Environmental Inspectors**: Environmental Compliance Manager, Lead Environmental Inspector, lead construction contractor(s) employee at each construction site

- **Construction Contractor(s)**: Proponent's project manager and construction contractor(s) employees (construction contractor(s) communication protocol to be developed and provided to the Project Proponent upon their request)

5.2. Daily Communications

The construction contractor(s) will schedule and host daily morning meetings to review the location and extent of each day's construction activities. Discussion should highlight safety and environmental issues, including a summary of activities that require monitoring by environmental inspectors and coordination with the CIC. Evidence of proper approvals must be furnished for any activities scheduled to occur outside designated areas. Attendees should include the CIC (or designee), the Environmental Compliance Manager (or designee), and the lead construction contractor(s) employee(s) for each construction spread. Meeting topics should include:

- safety review
- planned work activities and locations for the day
- right-of-way and land owner restrictions
- available access roads
- reminders of environmental requirements specific to the day's construction activities
- discussion of procedures required for work in proximity to sensitive resources
- upcoming, potential environmental issues

In addition to the morning meeting, construction contractor(s) employees and environmental monitors and resource specialists will conduct "tailgate" meetings, as needed, in the field to address issues that come up during the day.

6. PROJECT CLOSEOUT

Upon notification of completion Project construction (including initial restoration activities as described in Appendix F of the Final POD), the CIC will coordinate with the BLM Authorized Officer and resource staff to conduct final on-the-ground inspections. Inspections will take place within 30 days of notification from the Proponent and construction contractor(s) to ensure work was completed in accordance with the right-of-way grant, ROD, Final POD, and any other applicable permits. If the BLM Authorized Officer determines that construction (including initial restoration activities) has been completed in compliance with the right-of-way grant, ROD, Final POD, and any other applicable permits, the construction roles of the CIC, construction contractor(s), and Proponent will be considered complete. Upon this determination, the construction contractor(s) will be released from any further environmental compliance requirements for the Project. This determination will initiate the 7-year post-construction monitoring for restoration success (as described in Appendix F of the POD) period, for which the Proponent will remain responsible.

6.1. End of Construction Project Report

Within 60 days of the BLM's determination of successful construction completion, the CIC will submit a final summary report to the BLM Authorized Officer, documenting the construction process and activities in relation to the items listed below.

- Amount of actual temporary and permanent project disturbance (acres) in comparison with the POD
- Number of known special status species (plants or animals) taken, including the capture, displacement, mortality, and injury and/or harassment by other means, during project construction activities
- Compilation of all daily compliance reports (including digital pictures)
- Deviation requests and corresponding CIC/BLM decisions
- Temporary work suspensions and work stoppage orders for violation of environmental compliance terms, and documentation of resolution

6.2. Construction Closeout Meeting

As required by the BLM, the CIC will coordinate a construction closeout meeting with the BLM, Proponent, construction contractor(s), other field monitors and affected agencies to document that all agency requirements have been met, determine areas of improvement, and ensure all issues have been satisfactorily resolved.

Attachment A9-1: Organization Chart

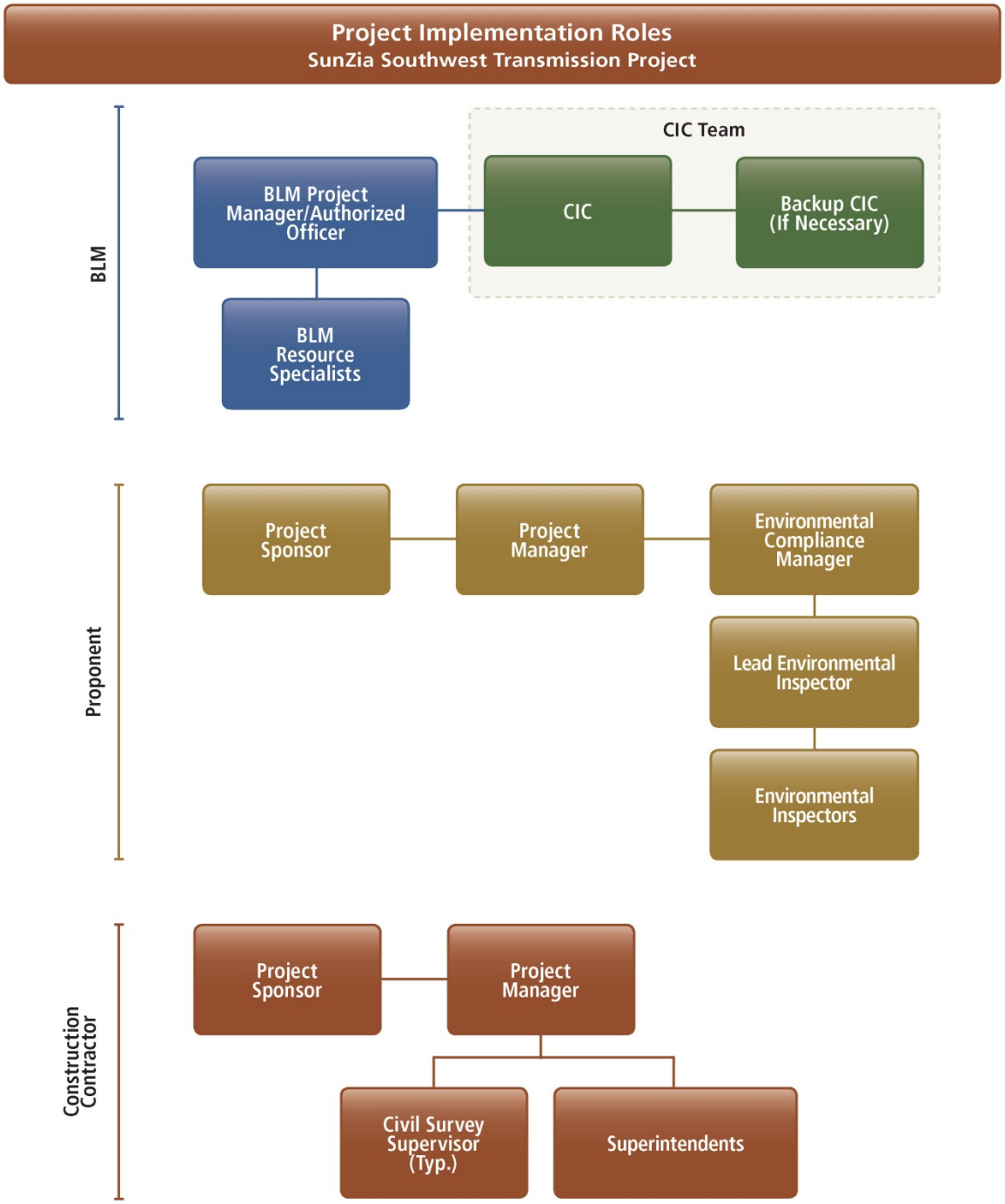

Attachment A9-2: Variance Request Process

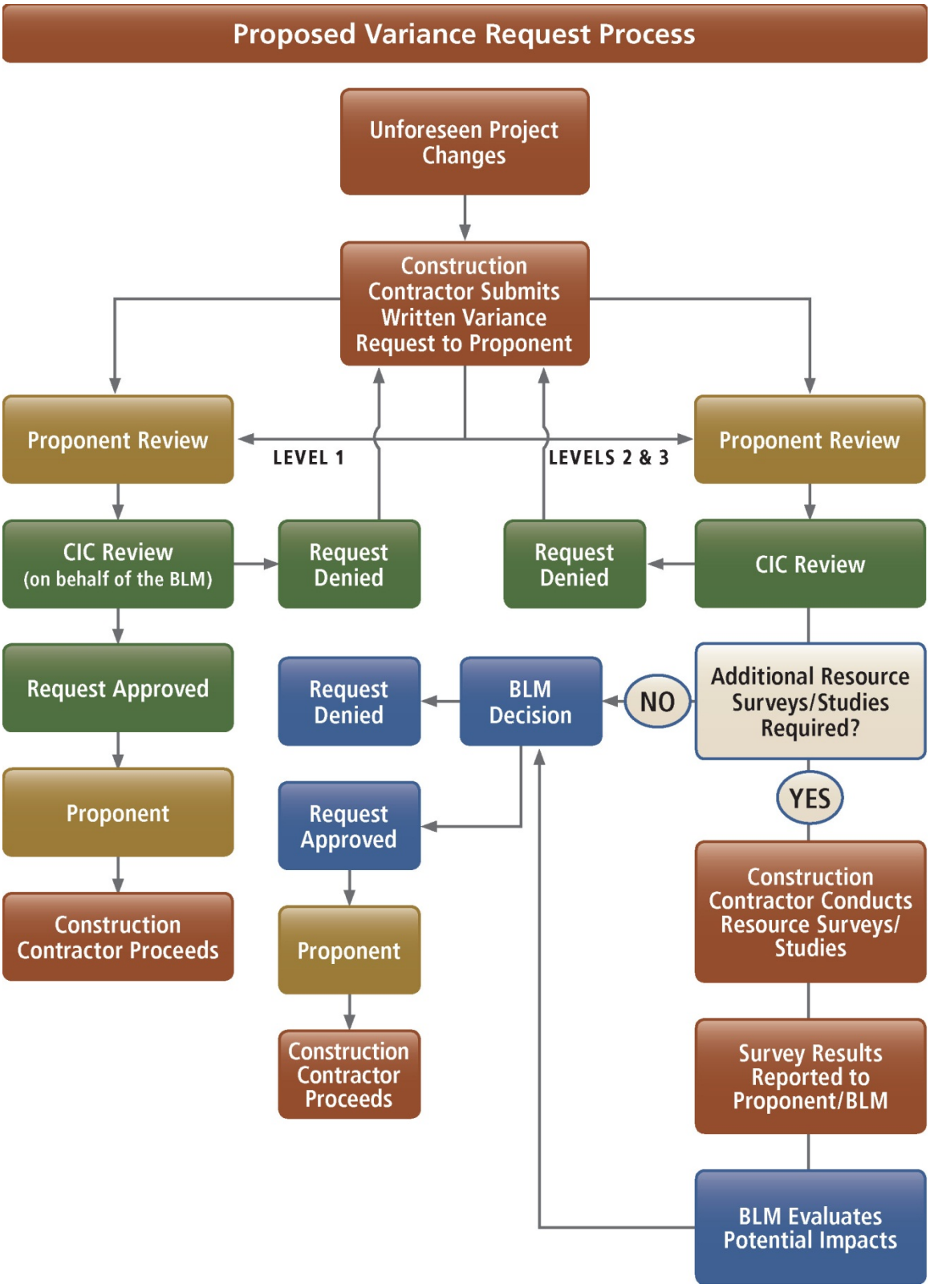

Attachment A9-3: Variance Request Form

SunZia Southwest Transmission Project

EXAMPLE Variance Request Form
(Note: All fields shaded in yellow are to be completed as applicable.)

Variance Request No.:

		Date Submitted to Proponent:	
		Date Proponent Submitted to BLM:	
		Date BLM Approves or Denies:	
Requested by:		BLM Approval Reference No.	
Request prepared by:		**Variance Type:**	
Spread:		**Variance Sequence Number:**	

Location (Use either Station or Milepost)

Station:		**To:**		**Milepost:**		**To:**	
Alignment Sheet Number:				**Tract No.:**			
Landowner:				**Other Agency Jurisdiction:**			
Current Land Use/Vegetative Cover:							

Nearby Features (Waerbody, T&E Habitat, Wetland, Noxious Weed Area, Residence [distance], Cultural Resource Site [distance], etc.):

☐ Noxious Weed Area	☐ Residence (distance)		**In or within 100 feet of a wetland:** ☐ Yes ☐ No
☐ T/E Species Habitat	☐ Cultural Resource Site (distance)		**In or within 100 feet of a waterbody:** ☐ Yes ☐ No
☐ Raptor Nest	☐ Water Well		**Wetland or Waterbody ID:**
☐ Other (Specify):			

Net acreage affected:

To be Completed by the LEI or CIC

Variance Level: ☐ Minor ☐ Major

Variance From: ☐ Permit ☐ POD ☐ ROW Grant ☐ FEIS ☐ Specification ☐ Drawing ☐ Mitigation Measure ☐ Landowner ☐ Other Describe:

Detailed Description of Variance: Attachments? ☐ Yes ☐ No Photographs? ☐ Yes ☐ No

List Attachments:

Variance Justification:

For Proponent Variance Management Use Only

Additional Surveys Required			Surveyed Corridor Description	Additional Surveys Completed	
Cultural Survey	☐ Yes	☐ No		☐ Yes	☐ No
T&E Survey	☐ Yes	☐ No		☐ Yes	☐ No

Proof of Previous Biological and Cultural Survey Clearance

Sign-off (as appropriate)	Name (Print)	Approval Signature	Conditions (See Attached)
RMP Environmental Compliance Manager			☐ Yes ☐ No
Lead Environmental Inspector			☐ Yes ☐ No
Land Agent			☐ Yes ☐ No
Contractor Environmental Coordinator			☐ Yes ☐ No

Page 1 of 2

For BLM Compliance Monitor and compliance manager Use Only					☐ Yes ☐ No
Variance Approved:		Variance Denied:		Beyond Authority:	
Signature::					
Date:					
Stipulations:					

Variance Conditions					
Name:		Title:		Organization:	
Conditions:					
Name:		Title:		Organization:	
Conditions:					
Name:		Title:		Organization:	
Conditions:					

VARIANCE REPORT FORM DEFINITIONS

CODE	TYPE
AR	Request new access road
CM	Request new or different construction
MM	Request new or different mitigation method
PM	Request permit modification
RA	Request new realignment of centerine
RR	Request re-route (outside cleared footprint)
WS	Request additional temporary workspace
CY	Request additional contractor yard
BLM	BLM EIS requirement
AG	Agency request

Page 2 of 2

Attachment A9-4: Daily Inspection Form

SunZia Southwest Transmission Project

EXAMPLE Daily Inspection Form

(Note: All fields shaded in yellow are to be completed as applicable.)

Employee No.:		Daily Report Sequence Number:		Daily Inspection Report Number:	
Name:		Station Begin:		Crew:	
Date:		Station End:		Foreman:	
Spread:	Time:	Milepost Begin:		Photo Documentation	
Tract:		Milepost End:		Date:	
Activity Observed:		Use only stationing.		Time Stamp:	

Site Conditions	
Weather Conditions (Clear, Cloudy, Partly Cloudy):	
Precipitation (None, Light Rain, Rain, Heavy Rain, Snow):	
Wind (None, Light Breeze, Windy, Heavy Wind):	
Temperature:	°F
ROW Conditions (Frozen, Dry, Wet, Saturated):	

Specification Source							
FEIS	☐	ROD	☐	SPCC	☐	Noxious Weed Plan	☐
POD	☐	ROW Grant	☐	Seeding	☐	Land Owner Agreement	☐
SWPPP	☐	Unexpected Discoveries Plan	☐			Other	
Drawing	☐	Drawing Number (s)					

Inspection Due Diligence Checklist	Check Box
Stormwater Plan Followed	☐
Measurable Rainfall in Area	☐
Weed Management Plan Followed	☐
ROW Boundaries Clearly Marked	☐
Restricted Areas Being Properly Handled	☐
Refueling/Storage Done Properly	☐
Signage Properly Placed	☐
Erosion/Sediment controls	☐
Installed/Maintained	☐
Land Owenr Conditions Implemented	☐
Workspace Clean and Debris Picked Up	☐

Compliance Level	
Acceptable	☐
Problem Area	☐
Non-Compliance	☐
Serious Violation	☐

Major Topic:	
Sub-Topic:	
Requirement:	

Page 1 of 2

Comments

Corrective Problem Area/Noncompliance/Serious Violation

Follow-up NC/PA Information

Time/Date Contractor Environmental Inspector Contacted		**Timeline**	☐ 24 hours	☐ 48 hours	☐ 72 hours
			Yes	**No**	
Due Date for Acceptable Resolution:		**Follow Up Required:**	☐	☐	
Inspector Affirmation:	☐	By checking this box, I affirm that the above observations are correct to the best of my knowledge.			

Page 2 of 2

1

Attachment A9-5: Noncompliance Report

SunZia Southwest Transmission Project

EXAMPLE Noncompliance Report			
Inspector:		**Date:**	

Description of Location:					
Legal Description:	**Township**		**Range**		**Section**
Map Sheet Number:		**Nearest Tower Number:**			

Description of Noncompliance:	
Person and Company	
Responsible for the noncompliance:	
Resolution: (Continue on reverse if necessary)	

Photographs: ☐ No ☐ Yes

Did the noncompliance result in surface disturbance? (if yes, map location and extent of disturbance and photograph)	☐ Yes	☐ No
Description of Disturbance and Assessment of Impact:		

Was a protected plant taken or affected?	☐ Yes	☐ No
Was a cultural or paleontological resource affected? (if yes, contact BLM and Rocky Mountain Power immediately)	☐ Yes	☐ No

Page 1 of 2

Sketch surface disturbance and measurements:

CIC Signature:	

Page 2 of 2

1

Appendix B – Biological Considerations

Appendix B1 – Biological Resources Protection Plan

TABLE OF CONTENTS

1 Introduction B1-3
1.1 Purpose B1-3
2 Regulatory Compliance B1-3
2.1 Federal Laws, Plans, and Policies B1-3
2.1.1 Endangered Species Act B1-3
2.1.2 Bald and Golden Eagle Protection Act B1-3
2.1.3 Migratory Bird Treaty Act B1-4
2.1.4 Clean Water Act, Section 404 ..... B1-4
2.1.5 Bureau of Land Management Land Use Plans B1-5
2.1.6 Bureau of Land Management Policies on Special-status Species B1-5
2.2 New Mexico State Requirements B1-6
2.3 Arizona State Requirements B1-6
3 Concerns Regarding Biological Resources B1-6
3.1 Identification of Key Issues B1-6
3.2 Potential Effects of the Proposed Project B1-7
3.2.1 Noise B1-7
3.2.2 Ground Disturbance B1-8
3.2.3 Vegetation Removal B1-8
3.2.4 Habitat Fragmentation B1-9
3.2.5 Invasive Plants B1-9
3.2.6 Vegetation Change B1-10
3.2.7 Erosion B1-11
3.2.8 Effects to Water Quality B1-11
3.2.9 Construction Site Hazards B1-11
3.2.10 Predation and Structure Avoidance B1-11
3.2.11 Collision B1-12
3.2.12 Increased Access B1-12
3.2.13 Human Disturbance B1-12
3.2.14 Road Mortality B1-13
4 Key Biological Resources and Mitigation Measures B1-13
4.1 ESA-listed, candidate, and proposed species B1-14
4.1.1 Lesser Long-nosed Bat (*Leptonycteris curasoae yerbabuenae*) B1-14
4.1.2 Northern Aplomado Falcon (*Falco femoralis septentrionalis*) B1-16
4.1.3 Western Yellow-billed Cuckoo (*Coccyzus americanus*) B1-19
4.1.4 Southwestern Willow Flycatcher (*Empidonax traillii extimus*) B1-22
4.1.5 Sonoran Population of the Desert Tortoise (*Gopherus agassizii*) B1-25
4.1.6 Northern Mexican Garter Snake (*Thamnophis eques megalops*) B1-28
4.1.7 Tucson Shovel-nosed Snake (*Chionactis occipitalis klauberi*) B1-31
4.1.8 ESA-listed and Candidate Fish Species B1-33
4.1.9 Pima Pineapple Cactus (*Coryphantha scheeri var. robustispina*) B1-33
4.1.10 Acuña Cactus (*Echinomastus erectocentrus var. acunensis*) B1-35
4.2 State of New Mexico threatened and endangered species B1-37
4.2.1 Desert Bighorn Sheep (*Ovis canadensis*) B1-37
4.2.2 Chihuahua Scurf-pea (*Pediomelum pentaphyllum*) B1-37

4.3 Migratory Birds B1-39
4.3.1 Nesting Birds B1-39
4.3.2 Raptor and Raptor Nests B1-42
4.3.3 Migratory Birds at Risk of Collision with or Electrocution from Project Facilities....B1-47
4.4 Big Game Species B1-51
4.4.1 Introduction....B1-51
4.4.2 Pronghorn....B1-51
4.4.3 Desert Bighorn Sheep B1-52
4.5 Effects to Habitat....B1-54
4.5.1 Fragmentation and Other Effects to Terrestrial Habitat B1-54
4.5.2 Effects to Aquatic Systems and Riparian Habitat....B1-57
4.6 Other Sensitive Species B1-66
4.6.1 Wildlife B1-66
4.6.2 Rare Plants B1-68
5 References Cited B1-72

LIST OF TABLES

Table B1-1. Flight Diverter Placement....B1-51
Table B1-2. DRAFT Special-status Aquatic and Riparian Species That May Occur Within the Project Area B1-58
Table B1-3. DRAFT Rare Plants with a Likelihood of Occurrence within the Project Study Area B1-68
Table B1-4. Special-status Animal and Plant Species Known or Expected to Occur within the Project Area B1-74

LIST OF FIGURES

(FIGURES WILL BE DEVELOPED UPON SELECTION OF PREFERRED ROUTE)

Figure B1-1. Raptor nest locations (To Be Determined) B1-46
Figure B1-2. Migratory bird with flight diverter locations B1-50
Figure B1-3. Locations of Aquatic areas (To Be Determined) B1-65
Figure B1-4. Other sensitive species locations (Source: AZGFD, NMGFD Heritage Programs)....B1-67
Figure B1-5. Rare Plant Locations (To Be Determined)....B1-71

1 INTRODUCTION

This Biological Protection Plan (BPP) is in support of design, construction, and operation of the SunZia Southwest Transmission Project (Project), a 500-kilovolt (kV) transmission line and ancillary facilities with alternatives located in portions of Hidalgo, Luna, Torrance, Lincoln, Socorro, Sierra, and Grant counties, New Mexico; and Graham, Greenlee, Cochise, Pinal, and Pima counties, Arizona. The plan includes information on regulatory requirements related to biological resources, concerns, and mitigation, including priority concerns and measures to specifically address key biological resources.

1.1 PURPOSE

The purpose of the BPP is to ensure the protection of sensitive biological resources (i.e., plants, wildlife, and their habitat) through the appropriate and effective application of mitigation measures. The BPP provides guidance on specific biological concerns associated with the Project and identifies the mitigation measures, stipulations, protocols, and/or techniques that are required to minimize impacts to biological resources.

2 REGULATORY COMPLIANCE

Following is a brief overview of regulatory compliance acts, and federal and state requirements that will be adhered to, and that have been considered in the development of the BPP.

2.1 FEDERAL LAWS, PLANS, AND POLICIES

2.1.1 Endangered Species Act

Pursuant to the Endangered Species Act of 1973 (ESA), the U.S. Fish and Wildlife Service (USFWS) has authority over actions that may take or otherwise affect terrestrial or freshwater species listed as threatened or endangered under the ESA. Under the ESA, the definition of "take" includes to kill, harm, or harass any listed species. The USFWS has interpreted the definition of "harm" to include adverse habitat modification.

If an action with a federal nexus has potential to affect a listed species, consultation under Section 7 of the ESA is required between the lead federal agency and USFWS. The biological assessment (BA) under development for the proposed Project is the primary supporting document required during Section 7 consultation. The BA provides information on the status of all listed, proposed, and candidate species that may be present in the Project area, and how they may be affected by the Project. (*Note: as the Project develops and the BA is finalized, involvement from the USFWS will increase*).

2.1.2 Bald and Golden Eagle Protection Act

The Bald and Golden Eagle Protection Act of 1940 (16 USC 668) applies primarily to taking, hunting, and trading activities that involve Bald or Golden Eagles. The act prohibits the "taking" of any individuals of these two species, as well as any part, nest, or egg. The term "take" as used

in the act includes to "pursue, shoot, shoot at, poison, wound, kill, capture, trap, collect, molest, or disturb."

2.1.3 Migratory Bird Treaty Act

The Migratory Bird Treaty Act (MBTA) (16 USC 703) makes it unlawful to pursue, hunt, take, capture, kill, or possess any migratory bird, or part, nest, or egg of such bird listed in treaties among the United States, Great Britain (on behalf of Canada), Mexico, Japan, and the former USSR (succeeded as signatory by Russia). This act also contains a clause that prohibits baiting or poisoning of these bird species. The current list of species covered by the MBTA can be found in Title 50 CFR Section 10.13. Compliance with the MBTA will require surveying for and delineating nondisturbance buffers (to be determined by a qualified biological monitor and the Compliance Inspection Contractor [CIC] on a case-by-case basis) for nesting birds during the breeding season.

2.1.4 Clean Water Act, Section 404

The U.S. Army Corps of Engineers (USACE) Nationwide Permit Number 12 (NWP12), Utility Line Activities authorizes the construction, maintenance, or repair of utility lines, including outfall and intake structures, and the associated excavation, backfill, or bedding for the utility lines, in all waters of the United States, provided there is no change in preconstruction contours and that the activity does not result in the loss of greater than .5 acre of waters of the United States. In accordance with NWP12, the Proponent must submit a preconstruction notification (PCN) to the USACE district engineer prior to commencement of activity if any of the following criteria is met:

1. The activity involves mechanized land clearing in a forested wetland for the utility line right-of-way
2. A Section 10 permit (obstruction or alteration of navigable waters of the United States) is required
3. The utility line (in waters), excluding overhead lines, exceeds 500 feet
4. The utility line is placed within a jurisdictional area (waters) and runs parallel to a stream bed that is within that jurisdictional area
5. The discharges result in the loss of more than 0.1 acre of regulated waters
6. Permanent access roads are constructed above grade in regulated waters for a distance of more than 500 feet
7. Permanent access roads are constructed in regulated waters with impervious materials

Following examination of all potential waters of the United States associated with the Project on U.S. Geological Survey quad maps, and the field check of the larger wash crossings with potential to meet 0.1 acre disturbance, it will be determined if the Project features trigger a requirement for submittal of a PCN under any of the thresholds identified in items 1, 2, 3, 4, and 7 above. If any locations would trigger a requirement for submittal of a PCN, further engineering solutions will be employed to attempt to reduce the impact below the PCN threshold.

The construction contractor(s) must follow the "below PCN approach" (i.e., not triggering any of the thresholds identified in items 1 through 7 above) for each disturbance of potential waters of

the United States; otherwise, if a PCN is triggered for any single location, the preconstruction notification could be required to be submitted for all potential waters of the United States to be disturbed by the Project. During the construction phase, the construction contractor(s) will continue to demonstrate that the Project does not trigger any of the PCN requirements, by keeping records during construction documenting that the permanent disturbance resulting from the Project does not exceed thresholds outlined in items 5 and 6 above.

The construction contractor(s) shall comply with the applicable General Conditions and Regional Conditions of NWP12. For all construction associated with the Project, the construction contractor(s) shall maintain records of compliance with the applicable conditions of NWP12 and provide those records to the Proponent.

2.1.5 Bureau of Land Management Land Use Plans

The Bureau of Land Management's (BLM) Resource Management Plans (RMP) provide management guidance and standards for wildlife and wildlife habitat on public land managed by the BLM. The BLM manages habitat for wildlife species by assessing the ability of a land area to supply the forage, cover, water, and space requirements of wildlife. Trend studies determine the directional change of a habitat away from or toward desired conditions. These habitat and trend studies (BLM Manual 6630.2, 6630.3, and 6630.4) allow the BLM to adjust management prescriptions through grazing or other public uses to improve habitat for big game. Ongoing analysis will determine whether portions of the route require seasonal restrictions for wildlife avoidance during construction and/or operation activities.

2.1.6 Bureau of Land Management Policies on Special-status Species

In New Mexico and Arizona, the BLM implements policies for "special-status" species found on BLM managed land. The following three categories comprise the BLM's list of special-status species:

- Federally listed as Threatened or Endangered, Proposed, and Candidate Species
- State Listed Species
- BLM Sensitive Species

BLM Manual 6840, Special-status Species Management, authorizes each BLM State Director to designate and protect sensitive species on lands managed by the BLM. In New Mexico, the BLM list of Special-status Species is adopted from the Biota Information System of New Mexico (BISON-M) list of sensitive wildlife species, and the New Mexico Rare Plant Technical Council's list of New Mexico rare plants. In Arizona, the BLM State Director has issued a list of species designated as BLM Sensitive. As stated in Instruction Memorandum No. AZ-2006-002 (BLM 2005), "BLM Sensitive species are not covered by any other 'safety net' of status designation. Therefore, the Arizona BLM Sensitive Species List does not include species that are already Federally-listed or State-listed."

The BLM affords its designated sensitive species the same level of protection as ESA Candidate Species. BLM Sensitive Species are those for which population viability is a concern, which is warranted by a downward trend in population numbers, density, or habitat conditions that would

reduce a species' existing distribution. The BLM is responsible for ensuring that its actions do not further contribute to the need for Sensitive Species to become listed as threatened or endangered.

2.2 NEW MEXICO STATE REQUIREMENTS

The New Mexico Department of Game and Fish (NMDGF), in accordance with the New Mexico Wildlife Conservation Act of 1978 (NMSA 1978 § 17-2-37, et seq.), established a list of animal species considered threatened or endangered within the state of New Mexico. The Forestry Division of the New Mexico Energy, Minerals, and Natural Resources Department administers plant resources listed under the New Mexico Endangered Plant Species Act of 1985 (NMSA 1978 § 75-6-1). ESA-listed species may be included as state-listed species, as appropriate. When these species occur on BLM-administered land, the BLM affords them the same level of protection as BLM Sensitive Species, previously described.

2.3 ARIZONA STATE REQUIREMENTS

The state of Arizona has no legislated protection for individual threatened and endangered species. Legislation pertaining to wildlife resources is contained in Chapter 17 of the Arizona Revised Statutes (ARS), and administered by the Arizona Game and Fish Department (AZGFD). Some protection for species of conservation concern is provided by the Arizona Game and Fish Commission through bag limits and regulation of hunting seasons, including permanent hunting season closure for some sensitive species.

The Arizona Native Plant Law (ARS § 3-901-907), administered by the Arizona Department of Agriculture, establishes a list of native plants afforded legal protection under the law, and defines four categories of protected native plants. Highly Safeguarded plant species, the highest protection category, are included in this review of sensitive resources within the study corridor. The remaining three categories of protected native plants are not included as they are not considered to be in jeopardy, and regulatory permitting and compensation measures are in place for these categories. When Highly Safeguarded species occur on BLM-administered land, the BLM affords them the same level of protection as BLM Sensitive Species, previously described.

3 CONCERNS REGARDING BIOLOGICAL RESOURCES

3.1 IDENTIFICATION OF KEY ISSUES

Throughout the planning stages of the Project, key biological resource concerns were identified in coordination with the BLM, NMDGF, AZGFD, and USFWS. The agencies identified the following biological resource categories as key issues:

- ESA-listed, candidate, and proposed species
- State of New Mexico threatened and endangered species
- Big game species, primarily Pronghorn and Desert Bighorn Sheep
- Migratory birds, including impacts to nesting birds, raptors, and the collision risk associated with transmission lines in areas of high bird use

- Loss and fragmentation of terrestrial habitats, and erosion or other potential effects to aquatic habitats
- Other special-status wildlife and rare plants
- Noxious weeds (addressed in Appendix B2 – Noxious Weed Management Plan)

Details for each of these resources, including their known distribution or potential for occurring within the Project area of influence, are found in the Project Environmental Impact Statement (EIS) and its appendices, the BA, and in this BPP, as appropriate.

The BA addresses endangered, threatened, candidate, and proposed species that could potentially be affected by the Project. Other special-status species identified by the BLM, NMDGF, and AZGFD were not included as an Appendix of the BA, but are addressed in the EIS (also see Section 4.6). During the development of the Final Plan of Development (POD), and to assist in mitigation planning, additional meetings will be held with BLM biologists and representatives from the two state wildlife agencies. (*Note: as the project develops and the BA is prepared, involvement from the USFWS will increase*). A list of key species and priority concerns were developed and a preliminary set of mitigation measures were identified during Project meetings. Specific and detailed information for addressing and protecting these biological concerns is the focus of this BPP. General guidelines and mitigation procedures also have been identified to assist in minimizing impacts (to the degree possible) to the remaining wildlife and plants that are found within the Project area. These mitigation measures, including stipulations to minimize disturbance levels, along with reclamation practices, are included throughout the appendices of the POD.

3.2 POTENTIAL EFFECTS OF THE PROPOSED PROJECT

The following sections describe 14 types of effects that may be expected to occur to biological resources as a result of the construction and operation of the Project. The mitigation measures developed for this Project focus on minimizing impacts to biological resources where possible, although some effects may be mitigated more effectively than others.

3.2.1 <u>Noise</u>

Noise generated during construction and operation of a transmission line can disturb wildlife. Noise and associated activity during construction may result in the avoidance of the immediate area by relatively tolerant species, or avoidance of much larger areas by highly sensitive species. The effects of noise may be greater during sensitive seasons. Some wildlife may be very sensitive to disturbance during key reproductive periods, and nearby construction noise could result in a substantial effect on reproductive success.

Short-term, high-intensity noise may occur under some circumstances. Blasting may be required for placement of structure foundations, loud noise may be generated during vegetation maintenance, and helicopters may assist construction crews in areas with high slopes or in other sensitive areas. Loud noises may cause short-term or long-term damage to the hearing of nearby wildlife, affecting their ability to detect predators (Bondello and Brattstrom 1979) or respond to vocalizations.

Long-term noise may occur during extended periods of construction or at low intensities due to corona discharge during operation of transmission lines. This noise may affect resident wildlife by masking other environmental sounds, and may result in avoidance of the immediate vicinity for some noise-sensitive species. Birds often sing louder when placed in noisy environments, with a substantial energetic cost (Brumm 2004). This could decrease the suitability of bird territories during periods of high corona discharge noise. Long-term noise that affects species that act as pollinators or seed dispersers can indirectly affect vegetation communities, as plants dependent on those species may experience reduced reproductive success (Francis et al. 2012).

3.2.2 Ground Disturbance

Ground-disturbing activities would be primarily associated with the construction phase of the Project, but would also occur during repair, maintenance, and decommissioning processes. Heavy equipment and other vehicles pose a direct risk to wildlife present on the surface or taking shelter in burrows that may be collapsed. In addition to physical impacts on key habitat features such as burrows or other sources of cover, operating heavy earth moving equipment includes vibration and noise effects that may adversely affect animal foraging, breeding, and nesting behaviors. The associated effects of vegetation damage or removal, habitat fragmentation, and erosion are discussed separately.

Ground disturbance may either loosen or compact soils, with potential negative effects resulting from either effect. Loosened soils are more susceptible to colonization by invasive plant species, and are more easily eroded by rainfall and wind. Compaction of soils reduces precipitation infiltration, thereby decreasing water availability for plants but increasing runoff and offsite erosion potential. Seed germination and native plant revegetation may be less successful in compacted soils, which can be difficult for burrowing animals to excavate, delaying their recolonization of these areas.

3.2.3 Vegetation Removal

Mechanical clearing of vegetation is highly disruptive to wildlife. Vegetation provides cover, nesting habitat, and forage for a wide variety of birds, mammals, reptiles, and invertebrates that depend on these resources. Removal of vegetation may result in habitat fragmentation, and can be compounded by edge effects, which may change wildlife behavior and plant communities at significant distances from the cleared area (Theobald et al. 1997).

Exposed, disturbed ground areas resulting from vegetation removal can present opportunities for colonization by invasive plant species that can have a wide variety of negative effects on native habitats. Invasive plants are commonly capable of out-competing native species for resources, usually provide less suitable forage for wildlife, and may ultimately permanently alter the local ecosystem. Loss of native plant communities may result in a monoculture of invasive plants that may cause habitat fragmentation, and can change the local fire regime. Once invasive plants obtain a foothold, they can in many cases expand into adjacent undisturbed habitat, further exacerbating the effect of their presence.

3.2.4 Habitat Fragmentation

Development of linear structures such as roads and transmission lines may result in habitat fragmentation of ecosystems that can affect both wildlife and local plant communities. Removal of vegetation creates areas of open ground that do not provide protective cover for animals, resulting in their reluctance to move within or cross such areas due to threat of predation. This affects their foraging and other life-cycle functions. Because linear rights-of-way are often continuous for great distances, they affect some species at a landscape scale by affecting wildlife movements and gene flow among metapopulations.

Except where they have been affected by human impact, wildlife movement corridors exist at some level between most wildland blocks in adjacent mountain ranges in the Southwest. Mobile species, such as large carnivores, use movement corridors to access distant hunting, foraging, and breeding areas in wildland blocks. Fragmentation of movement corridors can make these resources unavailable for wildlife, reducing their options for accessing resources that may be regionally variable from year to year. Wildland blocks also may serve as important refugia for species when stochastic events such as fire or long-term drought make some areas uninhabitable. Fragmentation can alter the viability of such refugia.

Wildlife species have minimum home range size requirements that are needed to supply adequate food and other habitat elements to support successful reproduction. Removal of vegetation, particularly in large contiguous areas or over long linear distances, may affect suitability of these areas as home ranges for species dependent on large, intact blocks of habitat.

Effects of vegetation removal on plant communities and wildlife use do not end at the disturbed-undisturbed interface, but extend some distance into adjacent areas not subject to direct disturbance (*ibid*). Removal of vegetation allows additional sunlight and air movement into edge areas, which may alter the plant community through changes in humidity and competition for light. Such changes in the vegetation community can directly or indirectly affect wildlife.

Changes in habitat structure related to fragmentation can favor certain species over others, changing the community structure for plants and wildlife. Typically, species that benefit from fragmentation are not species of conservation concern. The Brown-headed Cowbird (*Molothrus ater*) and Bronzed Cowbird (*M. aeneus*) are brood parasites on other birds, and prefer diverse, fragmented habitat rather than large blocks of either woodlands or open vegetation communities. Fragmentation of woodland communities can allow cowbird populations to increase, with potentially negative effects on other bird species.

3.2.5 Invasive Plants

Invasive plants are identified as a major threat to native ecosystems and multiple-use public land resources. Their impacts include, but are not limited to, “adverse effects on productivity, value, and management of publicly administered and private land and water resources; effects to both yield and quality of agriculturally important crops; livestock poisoning; impacts to threatened and endangered species and native biodiversity; adverse effects upon human health as allergens, through poisoning and by harboring plant disease vectors; reduction of water quality and habitat for fish and wildlife in streams, lakes, and reservoirs; interference with electrical power

transmission and other utility functions; and detracting from the aesthetic and recreational values of wildlands, parklands, and other areas" (United States Department of the Interior 1995).

Invasive plants are often competitors with native plants for resources, and may ultimately permanently change plant communities. Because invasive plants may lack any naturally controlling biological agents, they can spread uncontrolled into adjacent areas, may result in large-scale habitat modifications, and may alter the local fire regime by increasing the fire fuel load. Such changes can preclude re-establishment of the native plant community, and may represent a long-term or permanent change in the local ecology. Invasive plants often do not provide forage or shelter for wildlife comparable with native plants.

Many invasive plants are habitat generalists or adapted to cope with disturbance, and can be the first plants to recolonize areas after events such as fires or ground-clearing activities. Invasive plants that were previously uncommon may become dominant in disturbed areas. Additionally, human activities can create an opportunity for seeds of invasive plants to reach new areas. Such seeds may be transported by wind or water, and lodge directly in vehicles, in mud transported by vehicles, and in hay or seed mixes used to reclaim disturbed areas.

3.2.6 Vegetation Change

Aridlands vegetation communities may reach their climax condition only after decades or even centuries following disturbance. Successional communities that develop during that time may support wildlife, but will be functionally different from surrounding undisturbed vegetation. Certain plant species, rare in climax communities, may increase in abundance or become dominant. Vegetation removal, habitat fragmentation, and the effects of colonization by non-native invasive plants are all significant agents of vegetation change. A reduction of plant species diversity resulting from such change may affect soil moisture retention, plant community structure, and the effects of erosion. Vegetation change may have substantial effects on the local ecology by affecting the suite of plants and wildlife that it will support.

Even in the absence of non-native plant species, changes in land management can dramatically alter vegetation communities. Cattle graze selectively on certain plants and avoid others. This effect can interact with fire prevention to result in landscape-scale changes. Mesquite, creosote bush, and numerous species of subshrub are sensitive to high fire frequency, are not preferred browse plants for cattle, and are often uncommon in natural grasslands. However, fire suppression and cattle grazing can favor these plants over grasses, resulting in a shift from grassland to desertscrub (Brooks 2008). As a result, many Southwestern grassland species have experienced reductions in the amount of suitable habitat available. Natural fires or controlled burns may aid in habitat restoration, but safety concerns with operation of the overhead transmission lines may constrain fire use as a land management tool.

Biological soil crusts can be an important component of aridlands ecosystems, playing a substantial role in soil stabilization and nitrogen fixation. Soil crusts are composed of organisms such as lichens, mosses, bacteria, cyanobacteria, and fungi. These organisms may occur and contribute to stabilization in nearly all surface soils, although certain areas may develop extensive crusts covering the majority of open ground. The irregular surface of the crusts greatly increases water infiltration, and can retain and aid germination of wind-blown seeds. Damaged

crusts become more susceptible to wind and water erosion, and do not provide other beneficial functions to the same degree as intact crusts.

3.2.7 Erosion

Vegetation removal and other ground-disturbing activities may result in soil erosion by wind or runoff from precipitation. Heavy summer thunderstorms may occur in the Project area, and can rapidly erode destabilized soils. The upper soil layers contain the highest amounts of organic matter and nutrients; components that may take a long time to replace once lost to erosion. Desert biomes receive low annual precipitation and are dominated by slow-growing plants, resulting in long recovery times from disturbance. This increases the length of time that disturbed soils may experience unnatural erosion rates.

3.2.8 Effects to Water Quality

Potential impacts to aquatic resources may result from increased runoff and erosion associated with vegetation and other ground-disturbing construction activities. Runoff can transport sediments to waterways, affecting water quality through several mechanisms. Sediments in suspension may interfere with respiration in fishes, and sediments that settle out can alter stream substrates important for fishes and aquatic invertebrates. Chemical water quality may be altered by dissolved solids, including plant nutrients, that can be carried in runoff. Nutrients may increase productivity of an aquatic system, altering community dynamics and potentially decreasing dissolved oxygen levels as organic matter decomposes. Spills of petroleum products or other chemicals during construction or maintenance can present potential hazards for aquatic resources.

Alteration of vegetation and bank structure at stream crossings may adversely affect aquatic and riparian wildlife. Trimming or removal of bank vegetation may affect fish habitat by increasing water temperature, which results in lowered levels of dissolved oxygen. Traffic in low-water stream crossings, or any other physical disturbance of the stream bed and banks, may affect fish, amphibians, and their eggs directly or indirectly.

3.2.9 Construction Site Hazards

Wildlife entering construction sites may be exposed to several types of hazards. Excavations that are not securely covered may trap or injure animals. If not detected and removed rapidly during temperature extremes, the animals may die of exposure. Small mammals or reptiles may take cover under supplies and equipment, and may be injured or transported outside of their home ranges as the materials are moved.

3.2.10 Predation and Structure Avoidance

Grasslands and other open vegetation communities naturally provide very few high perches or suitable nest sites for raptors. Construction of transmission lines across these habitats provides numerous nest sites and hunting perches, and can result in increased predation on some species.

High impacts related to transmission line construction have been documented extensively for species such as the Desert Tortoise, many small mammals, and some ground-nesting birds.

The majority of species at risk of predation do not appear to inherently avoid tall structures. However, some species do use the presence of trees, buildings, and other vertical structures as an indicator of unsuitable habitat, apparently due to the increased predation risk. Sprague's Pipit has been found to avoid vertical elements in grassland nesting habitat. The area of these impacts can extend considerably beyond the right-of-way (USFWS 2010).

3.2.11 Collision

Transmission line structures, lines, and guy wires are known collision hazards for birds and bats. Birds may be killed or receive crippling injuries in collisions with these structures. The greatest potential collision hazards exist within avian flyways, particularly where lines cross perpendicular to the flight path. Transmission lines in close proximity to nesting or feeding habitats that support large numbers of birds increases the potential avian impact hazard. Such proximity represents a greater hazard to larger, less-agile birds such as cranes and geese. Placement of lines in these areas increases human presence in the area and may result in flushing of large numbers of birds, which may collide with lines. Collision potential is highest at night and during inclement weather, when visibility may be greatly reduced (Manville 2005).

Most bats can detect stationary objects adequately with echolocation, including transmission structures and wires, and are generally not at risk of collision. Under some circumstances, particularly during migration, bats may not constantly echolocate. This may be a cause of some bat collisions with structures, although mortality near wind turbines is recorded more often than collisions with stationary structures.

3.2.12 Increased Access

Creation of new roads required for Project development may allow postconstruction access by vehicles to previously inaccessible areas. Adverse effects may result from human use of these areas from improper use of off-highway vehicles (OHV), legal or illegal recreational shooting, vandalism, littering, and other activities. Increased traffic on utility roads will result in increased noise, ground disturbance that may contribute to erosion, increased road mortality of animals, and the potential for the introduction of non-native invasive plant species. OHVs operated off of established routes crush vegetation and small animals on the surface, and may collapse burrows, resulting in entrapment and loss of animals. Off-road OHV use can significantly affect sensitive resources, including riparian areas, dunes, and biological soil crusts. Dense networks of informal roads often develop over time in popular areas for OHV use, with an attendant increase in overall adverse impacts that may include vegetation loss, erosion, compaction of soils, and littering.

3.2.13 Human Disturbance

Noise created by humans is not the only human-related element that is disruptive to wildlife. The very presence of humans may inadvertently haze animals or cause disruption of behaviors, including foraging, hunting, breeding, and nesting. Continued or repeated disturbances can result

in nest abandonment in birds, and can keep animals from crucial resources such as water. Humans may intentionally harass, shoot, or otherwise kill wildlife. Snakes suffer disproportionate impacts of intentional killing due to irrational fear many people have of the animals. Turtles, tortoises, lizards, and snakes are commonly removed from the environment for use as pets. Humans may return captured animals to the wild, which may introduce diseases into unaffected wild populations. Invasive animals such as American Bullfrogs, non-native sport fish, and crayfish are commonly introduced into previously unoccupied aquatic habitats by humans, resulting in significant adverse ecological effects.

3.2.14 Road Mortality

Development of new utility access roads may introduce vehicle traffic into previously inaccessible areas or increase the number of roads in an area. Any road that supports vehicle traffic, including OHVs, potentially results in an increase in road mortality of wildlife. Animals that are particularly susceptible to road mortality include amphibians, reptiles, and small mammals. Utility right-of-way roads that service multiple utilities within a corridor may be better developed and may support higher rates of travel by vehicles. Such roads usually will result in a higher level of wildlife road mortality and will affect more agile and mobile species such as Coyotes and various raptors. Such roads are seldom paved, and thus do not present the added thermal attraction to snakes, which commonly results in high levels of road mortality of the animals. Postconstruction maintenance use of utility roads does not typically result in large impacts to wildlife because traffic is periodic, speeds are responsible, and the level of use is not high. Recreational use of utility access roads commonly involves OHVs, sometimes at high speeds, and presents a significant threat for small animals in the area.

4 KEY BIOLOGICAL RESOURCES AND MITIGATION MEASURES

This section of the BPP describes detailed mitigation intended to achieve the goals for the key biological resources previously identified. Included in this discussion are (1) a background summary for each resource or species; (2) concerns related to each resource or species; and (3) mitigation measures to address these concerns during the design, construction, and operation and maintenance phases of Project facilities.

Mitigation measures were developed during the planning phase of the Project. Proposed standard and selective mitigation measures included in the Project Draft EIS received agency and public review. Agency and public review comments were subsequently incorporated into a set of final mitigation measures, which are found in tables 6-1 (Standard Mitigation Measures) and 6-2 (Selective Mitigation Measures) of the POD. Standard mitigation measures are those that apply to the Project as a whole, and typically address specific environmental policies and regulatory requirements. Selective mitigation measures beyond the standard measures have been developed to further reduce potential impacts, often in specific locations or to resources that are not widely distributed.

The construction contractor(s) shall adhere to the measures applicable to the engineering/design phase of the Project, as well as those measures that address construction and reclamation activities. The CIC is responsible for the oversight of the implementation of these measures, to

ensure that the Applicant and the construction contractor(s) meet the intent of the mitigation measures.

4.1 ESA-LISTED, CANDIDATE, AND PROPOSED SPECIES

The following species include those known or expected to occur in the Project area, which depend on habitat elements that may be affected by the proposed Project. Other listed species, including some migratory birds and tropical cats, may also occur in the Project area infrequently and unpredictably. In those cases, identification of site-specific mitigation measures may not be feasible. All ESA-listed, proposed, and candidate species with potential to occur in the Project area are discussed in detail in the BA, and further mitigation measures may be developed for any species if determined to be appropriate.

4.1.1 Lesser Long-nosed Bat (*Leptonycteris curasoae yerbabuenae*)

4.1.1.1 Background

The Lesser Long-nosed Bat is a nectar-feeding bat associated with Sonoran and Chihuahuan desertscrub in southern Arizona and southwestern New Mexico. The species migrates from Mexico into the United States in late spring, following the blooming seasons of saguaros and certain species of agave. Lesser Long-nosed Bats reproduce in large maternity colonies, several of which are located in Arizona. Forage plants for the species are widespread throughout the Project area, from the Peloncillo Mountains west to the Picacho Mountains near the Pinal Central substation.

4.1.1.2 Concerns

No roost sites for the species are known or expected to occur near any of the proposed alternatives. However, agaves and saguaros are present and may be affected by any ground-disturbing activities. Saguaros are long-lived and slow-growing, and agaves flower only once after several decades of growth. Loss of large numbers of these plants could result in long-term impacts.

4.1.1.3 Mitigation

Design and Engineering

- In construction areas where grading is not required, vegetation would be left in place wherever possible, and original contour would be maintained to avoid excessive root damage and allow for regrowth. All existing roads would be left in a condition equal to or better than their condition prior to the construction of the transmission lines, as determined by the appropriate land-managing agency.
- To limit new disturbance, existing access roads in the Project area would be used to the extent practicable, provided that doing so does not additionally impact resource values.

- Prior to construction, all supervisory construction personnel would be instructed on the protection of cultural and ecological resources. To assist in this effort, the construction CIC or a resource specialist would address: (a) federal and state laws regarding antiquities and plants and wildlife, including collection and removal; (b) the importance of these resources and the purpose and necessity of protecting them.
- Preconstruction surveys for species listed under the ESA or specified by the appropriate land management agency as sensitive or of concern would be conducted in areas of known occurrence or suitable habitat. Timing of the surveys would be determined by the construction schedule. Monitoring of construction activities would be required in some areas to ensure that effects to these species are avoided during construction.
- Preconstruction native plant inventories and surveys for noxious weed species as stipulated by the appropriate land-administering agency would also be conducted once transmission line centerline, access roads, and tower sites have been located.
- Surveys for bat roosts would be conducted within ¼ mile of the Project right-of-way in areas that potentially contain caves, karst features, or mines. Occupied bat roosts would be avoided.
- Paniculate agave plants (*Agave palmeri*, *A. parryi*, and *A. chrysantha*) and saguaro cacti (*Carnegiea gigantea*) within the known range of the Lesser Long-nosed Bat or Cactus Ferruginous Pygmy-owl would be avoided or salvaged for replanting within the right-of-way or suitable adjacent habitat. Only agaves not possessing flower stalks would be salvaged, and only saguaros of transplantable size (15 feet or less in height) would be salvaged.
- In designated areas, structures would be placed so as to avoid, and/or to allow conductors to span sensitive features such as riparian areas, water courses, roads, trails, bat roosts, and cultural sites within limits of standard tower design. This would minimize the amount of sensitive features disturbed and/or reduce visual contrast.

Construction

- The boundary of construction activities would typically be predetermined, with activity restricted to and confined within those limits. No paint or permanent discoloring agents would be applied to rocks or vegetation to indicate survey or construction activity limits.
- In construction areas where grading is not required, vegetation would be left in place wherever possible, and original contour would be maintained to avoid excessive root damage and allow for regrowth. All existing roads would be left in a condition equal to or better than their condition prior to the construction of the transmission lines, as determined by the appropriate land-managing agency.
- To limit new disturbance, existing access roads in the Project area would be used to the extent practicable, provided that doing so does not additionally impact resource values.
- In construction areas (e.g., marshalling yards, structure sites, spur roads from existing access roads) where grading is required, surface restoration would be implemented as required by the landowner or BLM Authorized Officer. The method of restoration would normally consist of returning disturbed areas back to their natural contour, reseeding

(where required), cross drains installed for erosion control, placing water bars in the road, and filling ditches.

- Prior to construction, all supervisory construction personnel would be instructed on the protection of cultural and ecological resources. To assist in this effort, the construction CIC or a resource specialist would address: (a) federal and state laws regarding antiquities and plants and wildlife, including collection and removal; (b) the importance of these resources and the purpose and necessity of protecting them.
- Preconstruction surveys for species listed under the ESA or specified by the appropriate land management agency as sensitive or of concern would be conducted in areas of known occurrence or suitable habitat. Timing of the surveys would be determined by the construction schedule. Monitoring of construction activities would be required in some areas to ensure that effects to these species are avoided during construction.
- Surveys for bat roosts would be conducted within ¼ mile of the Project right-of-way in areas that potentially contain caves, karst features, or mines. Occupied bat roosts would be avoided.
- Paniculate agave plants (*Agave palmeri*, *A. parryi*, and *A. chrysantha*) and saguaro cacti (*Carnegiea gigantea*) within the known range of the Lesser Long-nosed Bat or Cactus Ferruginous Pygmy-owl would be avoided or salvaged for replanting within the right-of-way or suitable adjacent habitat. Only agaves not possessing flower stalks would be salvaged, and only saguaros of transplantable size (15 feet or less in height) would be salvaged.
- In addition to standard reseeding and recontouring practices, a detailed Project reclamation plan would be developed to mitigate site-specific resource impacts.

Operations and Maintenance

- Preconstruction surveys for species listed under the ESA or specified by the appropriate land management agency as sensitive or of concern would be conducted in areas of known occurrence or suitable habitat. Timing of the surveys would be determined by the construction schedule. Monitoring of construction activities would be required in some areas to ensure that effects to these species are avoided during construction.
- In addition to standard reseeding and recontouring practices, a detailed Project reclamation plan would be developed to mitigate site-specific resource impacts.

4.1.2 Northern Aplomado Falcon (*Falco femoralis septentrionalis*)

4.1.2.1 Background

Northern Aplomado Falcons were extirpated from the Project area, but were reintroduced to New Mexico as a non-essential experimental population (NEP) beginning in 2006. Releases have taken place at multiple locations in the Rio Grande Valley and grasslands in Luna County. Aplomado Falcons are strongly associated with grasslands, preferring habitat with a low shrub density. Aplomado Falcons use existing nests constructed by other large birds, often in plants

such as soaptree yuccas (*Yucca elata*) and mesquite trees, and may even nest in riparian trees, if suitable grasslands are present adjacent to the riparian woodland.

4.1.2.2 Concerns

Many raptors may benefit from the presence of transmission lines, as the structures can provide nest substrates in open areas where trees, cliffs, and other suitable nest locations were previously absent. Aplomado Falcons have been observed using nests on transmission structures, although the structure height was reported as being less than 60 feet (Jenny et al. 2004); the potential for them to use nests on structures approximately twice that height, such as those that would be used for the proposed Project, is unknown. Nesting Aplomado Falcons could be disturbed during construction or maintenance of the proposed Project, although the species does not appear to be as sensitive to disturbance as some raptors (USFWS 2006).

4.1.2.3 Mitigation

Design and Engineering

- In construction areas where grading is not required, vegetation would be left in place wherever possible, and original contour would be maintained to avoid excessive root damage and allow for regrowth. All existing roads would be left in a condition equal to or better than their condition prior to the construction of the transmission lines, as determined by the appropriate land-managing agency.
- To limit new disturbance, existing access roads in the Project area would be used to the extent practicable, provided that doing so does not additionally impact resource values.
- Prior to construction, all supervisory construction personnel would be instructed on the protection of cultural and ecological resources. To assist in this effort, the construction CIC or a resource specialist would address: (a) federal and state laws regarding antiquities and plants and wildlife, including collection and removal; (b) the importance of these resources and the purpose and necessity of protecting them.
- Preconstruction surveys for species listed under the ESA or specified by the appropriate land management agency as sensitive or of concern would be conducted in areas of known occurrence or suitable habitat. Timing of the surveys would be determined by the construction schedule. Monitoring of construction activities would be required in some areas to ensure that effects to these species are avoided during construction.
- To reduce ground disturbance and visual contrast, the separation between the transmission lines and existing utilities, roads, or railroads would be minimized to the extent practicable.

Construction

- Overland access (i.e., drive-and-crush or cut-and-clear) would be used to the greatest extent possible in areas where no grading would be needed to access work areas. Drive-and-crush is vehicular travel to access a site without significantly modifying the landscape. Vegetation is crushed, but not cropped. Soil is compacted, but no surface soil

is removed. Cut-and-clear is considered as brushing off (removal) of all vegetation to improve or provide suitable access for equipment. All vegetation is removed using above-ground cutting methods that leave the root crown intact.

- The boundary of construction activities would typically be predetermined, with activity restricted to and confined within those limits. No paint or permanent discoloring agents would be applied to rocks or vegetation to indicate survey or construction activity limits.
- In construction areas where grading is not required, vegetation would be left in place wherever possible, and original contour would be maintained to avoid excessive root damage and allow for regrowth. All existing roads would be left in a condition equal to or better than their condition prior to the construction of the transmission lines, as determined by the appropriate land-managing agency.
- To limit new disturbance, existing access roads in the Project area would be used to the extent practicable, provided that doing so does not additionally impact resource values.
- In construction areas (e.g., marshalling yards, structure sites, spur roads from existing access roads) where grading is required, surface restoration would be implemented as required by the landowner or BLM Authorized Officer. The method of restoration would normally consist of returning disturbed areas back to their natural contour, reseeding (where required), cross drains installed for erosion control, placing water bars in the road, and filling ditches.
- Prior to construction, all supervisory construction personnel would be instructed on the protection of cultural and ecological resources. To assist in this effort, the construction CIC or a resource specialist would address: (a) federal and state laws regarding antiquities and plants and wildlife, including collection and removal; (b) the importance of these resources and the purpose and necessity of protecting them.
- Preconstruction surveys for species listed under the ESA or specified by the appropriate land management agency as sensitive or of concern would be conducted in areas of known occurrence or suitable habitat. Timing of the surveys would be determined by the construction schedule. Monitoring of construction activities would be required in some areas to ensure that effects to these species are avoided during construction.
- With the exception of emergency repair situations, right-of-way construction, restoration, maintenance, and termination activities in designated areas would be modified or discontinued during sensitive periods (e.g., nesting and breeding periods) for candidate, proposed threatened and endangered, or other sensitive animal species. Sensitive periods, species affected, and areas of concern would be approved in advance of construction or operations by the BLM Authorized Officer.

<u>Operations and Maintenance</u>

- Overland access (i.e., drive-and-crush or cut-and-clear) would be used to the greatest extent possible in areas where no grading would be needed to access work areas. Drive-and-crush is vehicular travel to access a site without significantly modifying the landscape. Vegetation is crushed, but not cropped. Soil is compacted, but no surface soil is removed. Cut-and-clear is considered as brushing off (removal) of all vegetation to

improve or provide suitable access for equipment. All vegetation is removed using above-ground cutting methods that leave the root crown intact.

- Preconstruction surveys for species listed under the ESA or specified by the appropriate land management agency as sensitive or of concern would be conducted in areas of known occurrence or suitable habitat. Timing of the surveys would be determined by the construction schedule. Monitoring of construction activities would be required in some areas to ensure that effects to these species are avoided during construction.
- In addition to standard reseeding and recontouring practices, a detailed Project reclamation plan would be developed to mitigate site-specific resource impacts.
- With the exception of emergency repair situations, right-of-way construction, restoration, maintenance, and termination activities in designated areas would be modified or discontinued during sensitive periods (e.g., nesting and breeding periods) for candidate, proposed threatened and endangered, or other sensitive animal species. Sensitive periods, species affected, and areas of concern would be approved in advance of construction or operations by the BLM Authorized Officer.

4.1.3 Western Yellow-billed Cuckoo (*Coccyzus americanus*)

4.1.3.1 Background

The Western distinct population segment of the Yellow-billed Cuckoo is a candidate for listing under the ESA as threatened or endangered. The Yellow-billed Cuckoo occupies large stands of mature cottonwoods, dense willows, or other vegetation with a multi-storied canopy, typically associated with riparian corridors, that provides adequate invertebrate prey and cover for foraging juveniles. The Yellow-billed Cuckoo is present within the Project area along the Rio Grande in New Mexico, and occasionally on Cienega Creek in Arizona. The species also occurs along portions of the San Pedro River in Arizona, but mostly upstream and downstream of the Project area. There is a low potential for the species occurring in the San Pedro River within the Project area. Yellow-billed Cuckoos occur at many locations along the Rio Grande, and there is a moderate potential for them occurring within the Project area.

4.1.3.2 Concerns

Continued pressures on the species resulting from degradation and loss of riparian nesting habitat due to dam construction, stream channelization, groundwater pumping, conversion of land for agriculture and other uses, livestock grazing, and invasive exotic plants (particularly saltcedar) have significantly reduced suitable available habitat for the species in the Southwest.

4.1.3.3 Mitigation

Design and Engineering

- In construction areas where grading is not required, vegetation would be left in place wherever possible, and original contour would be maintained to avoid excessive root damage and allow for regrowth. All existing roads would be left in a condition equal to or

better than their condition prior to the construction of the transmission lines, as determined by the appropriate land-managing agency.

- To limit new disturbance, existing access roads in the Project area would be used to the extent practicable, provided that doing so does not additionally impact resource values.
- Prior to construction, all supervisory construction personnel would be instructed on the protection of cultural and ecological resources. To assist in this effort, the construction CIC or a resource specialist would address: (a) federal and state laws regarding antiquities and plants and wildlife, including collection and removal; (b) the importance of these resources and the purpose and necessity of protecting them.
- To the extent practicable, structures would be sited with a minimum distance of 200 feet from streams.
- Preconstruction surveys for species listed under the ESA or specified by the appropriate land management agency as sensitive or of concern would be conducted in areas of known occurrence or suitable habitat. Timing of the surveys would be determined by the construction schedule. Monitoring of construction activities would be required in some areas to ensure that effects to these species are avoided during construction.
- There would be no blading of new access roads in select areas of construction and operations. Existing crossings would be utilized at perennial streams, designated recreational trails, and irrigation channels. Off-road or cross-country access routes would be used for construction and maintenance in select areas. This would minimize ground disturbance impacts. These access routes must be flagged with an easily seen marker, and the route must be approved in advance of use by the BLM Authorized Officer or landowner.
- In designated areas, structures would be placed so as to avoid, and/or to allow conductors to span sensitive features such as riparian areas, water courses, roads, trails, bat roosts, and cultural sites within limits of standard tower design. This would minimize the amount of sensitive features disturbed and/or reduce visual contrast.

Construction

- In construction areas where grading is not required, vegetation would be left in place wherever possible, and original contour would be maintained to avoid excessive root damage and allow for regrowth. All existing roads would be left in a condition equal to or better than their condition prior to the construction of the transmission lines, as determined by the appropriate land-managing agency.
- To limit new disturbance, existing access roads in the Project area would be used to the extent practicable, provided that doing so does not additionally impact resource values.
- Prior to construction, all supervisory construction personnel would be instructed on the protection of cultural and ecological resources. To assist in this effort, the construction CIC or a resource specialist would address: (a) federal and state laws regarding antiquities and plants and wildlife, including collection and removal; (b) the importance of these resources and the purpose and necessity of protecting them.

- Roads would be built as near as possible at right angles to the streams and washes. Culverts or temporary bridges would be installed where necessary. All construction and operations activities shall be conducted in a manner that would minimize disturbance to vegetation, drainage channels, and intermittent or perennial stream banks.
- Preconstruction surveys for species listed under the ESA or specified by the appropriate land management agency as sensitive or of concern would be conducted in areas of known occurrence or suitable habitat. Timing of the surveys would be determined by the construction schedule. Monitoring of construction activities would be required in some areas to ensure that effects to these species are avoided during construction.
- There would be no blading of new access roads in select areas of construction and operations. Existing crossings would be utilized at perennial streams, designated recreational trails, and irrigation channels. Off-road or cross-country access routes would be used for construction and maintenance in select areas. This would minimize ground disturbance impacts. These access routes must be flagged with an easily seen marker, and the route must be approved in advance of use by the BLM Authorized Officer or landowner.
- In addition to standard reseeding and recontouring practices, a detailed Project reclamation plan would be developed to mitigate site-specific resource impacts.
- With the exception of emergency repair situations, right-of-way construction, restoration, maintenance, and termination activities in designated areas would be modified or discontinued during sensitive periods (e.g., nesting and breeding periods) for candidate, proposed threatened and endangered, or other sensitive animal species. Sensitive periods, species affected, and areas of concern would be approved in advance of construction or operations by the BLM Authorized Officer.
- To minimize disturbance to riparian vegetation and woodlands, and to reduce visual contrast, clearing of trees in and adjacent to the right-of-way would be minimized to the extent practicable to satisfy conductor-clearance requirements (NESC and up to 10 years of timber growth). Trees and other vegetation would be removed selectively (e.g., edge feathering) to blend the edge of the right-of-way into adjacent vegetation patterns, as practicable and appropriate.
- To minimize bird collisions, bird diverters would be installed and maintained on groundwires, transmission lines, and/or guywires in areas of heavy bird use (i.e., Rio Grande and other riparian corridors). Groundwires would be replaced with one-inch diameter OHGWs to increase visibility where practicable and appropriate.

<u>Operations and Maintenance</u>

- To limit new disturbance, existing access roads in the Project area would be used to the extent practicable, provided that doing so does not additionally impact resource values.
- Roads would be built as near as possible at right angles to the streams and washes. Culverts or temporary bridges would be installed where necessary. All construction and operations activities shall be conducted in a manner that would minimize disturbance to vegetation, drainage channels, and intermittent or perennial stream banks.

- Preconstruction surveys for species listed under the ESA or specified by the appropriate land management agency as sensitive or of concern would be conducted in areas of known occurrence or suitable habitat. Timing of the surveys would be determined by the construction schedule. Monitoring of construction activities would be required in some areas to ensure that effects to these species are avoided during construction.
- In addition to standard reseeding and recontouring practices, a detailed Project reclamation plan would be developed to mitigate site-specific resource impacts.
- With the exception of emergency repair situations, right-of-way construction, restoration, maintenance, and termination activities in designated areas would be modified or discontinued during sensitive periods (e.g., nesting and breeding periods) for candidate, proposed threatened and endangered, or other sensitive animal species. Sensitive periods, species affected, and areas of concern would be approved in advance of construction or operations by the BLM Authorized Officer.
- To minimize bird collisions, bird diverters would be installed and maintained on groundwires, transmission lines, and/or guywires in areas of heavy bird use (i.e., Rio Grande and other riparian corridors). Groundwires would be replaced with one-inch diameter OHGWs to increase visibility where practicable and appropriate.

4.1.4 Southwestern Willow Flycatcher (*Empidonax traillii extimus*)

4.1.4.1 Background

The Southwestern Willow Flycatcher is an ESA-listed endangered species with designated critical habitat. Within the Project area Southwestern Willow Flycatchers are known to be present or potentially occur along portions of the San Pedro River in Arizona and the Rio Grande in New Mexico. Designated critical habitat for the species is present within the Project area. In the southern portion of their breeding range in Arizona and New Mexico, Southwestern Willow Flycatchers prefer dense, seasonally flooded willow, cottonwood, or tamarisk stands along rivers or reservoirs.

4.1.4.2 Concerns

The principal threats to the species are degradation and loss of riparian habitat and brood parasitism by brown-headed cowbirds (*Molothrus ater*). The primary causes for riparian alteration and degradation include urban and agricultural development, water diversion and impoundment, stream channelization, livestock grazing, off-road vehicles and other recreational activities, and hydrological changes resulting from these uses. Potential Project impacts to the species include effects to habitat at river crossings. Removal of vegetation can remove or fragment nesting habitat, and transmission lines crossing riparian areas may present a collision hazard for birds.

4.1.4.3 Mitigation

Design and Engineering

- In construction areas where grading is not required, vegetation would be left in place wherever possible, and original contour would be maintained to avoid excessive root damage and allow for regrowth. All existing roads would be left in a condition equal to or better than their condition prior to the construction of the transmission lines, as determined by the appropriate land-managing agency.
- To limit new disturbance, existing access roads in the Project area would be used to the extent practicable, provided that doing so does not additionally impact resource values.
- Prior to construction, all supervisory construction personnel would be instructed on the protection of cultural and ecological resources. To assist in this effort, the construction CIC or a resource specialist would address: (a) federal and state laws regarding antiquities and plants and wildlife, including collection and removal; (b) the importance of these resources and the purpose and necessity of protecting them.
- To the extent practicable, structures would be sited with a minimum distance of 200 feet from streams.
- Preconstruction surveys for species listed under the ESA or specified by the appropriate land management agency as sensitive or of concern would be conducted in areas of known occurrence or suitable habitat. Timing of the surveys would be determined by the construction schedule. Monitoring of construction activities would be required in some areas to ensure that effects to these species are avoided during construction.
- There would be no blading of new access roads in select areas of construction and operations. Existing crossings would be utilized at perennial streams, designated recreational trails, and irrigation channels. Off-road or cross-country access routes would be used for construction and maintenance in select areas. This would minimize ground disturbance impacts. These access routes must be flagged with an easily seen marker, and the route must be approved in advance of use by the BLM Authorized Officer or landowner.
- In designated areas, structures would be placed so as to avoid, and/or to allow conductors to span sensitive features such as riparian areas, water courses, roads, trails, bat roosts, and cultural sites within limits of standard tower design. This would minimize the amount of sensitive features disturbed and/or reduce visual contrast.

Construction

- In construction areas where grading is not required, vegetation would be left in place wherever possible, and original contour would be maintained to avoid excessive root damage and allow for regrowth. All existing roads would be left in a condition equal to or better than their condition prior to the construction of the transmission lines, as determined by the appropriate land-managing agency.
- To limit new disturbance, existing access roads in the Project area would be used to the extent practicable, provided that doing so does not additionally impact resource values.

- Prior to construction, all supervisory construction personnel would be instructed on the protection of cultural and ecological resources. To assist in this effort, the construction CIC or a resource specialist would address: (a) federal and state laws regarding antiquities and plants and wildlife, including collection and removal; (b) the importance of these resources and the purpose and necessity of protecting them.
- Roads would be built as near as possible at right angles to the streams and washes. Culverts or temporary bridges would be installed where necessary. All construction and operations activities shall be conducted in a manner that would minimize disturbance to vegetation, drainage channels, and intermittent or perennial stream banks.
- Preconstruction surveys for species listed under the ESA or specified by the appropriate land management agency as sensitive or of concern would be conducted in areas of known occurrence or suitable habitat. Timing of the surveys would be determined by the construction schedule. Monitoring of construction activities would be required in some areas to ensure that effects to these species are avoided during construction.
- There would be no blading of new access roads in select areas of construction and operations. Existing crossings would be utilized at perennial streams, designated recreational trails, and irrigation channels. Off-road or cross-country access routes would be used for construction and maintenance in select areas. This would minimize ground disturbance impacts. These access routes must be flagged with an easily seen marker, and the route must be approved in advance of use by the BLM Authorized Officer or landowner.
- In addition to standard reseeding and recontouring practices, a detailed Project reclamation plan would be developed to mitigate site-specific resource impacts.
- With the exception of emergency repair situations, right-of-way construction, restoration, maintenance, and termination activities in designated areas would be modified or discontinued during sensitive periods (e.g., nesting and breeding periods) for candidate, proposed threatened and endangered, or other sensitive animal species. Sensitive periods, species affected, and areas of concern would be approved in advance of construction or operations by the BLM Authorized Officer.
- To minimize disturbance to riparian vegetation and woodlands, and to reduce visual contrast, clearing of trees in and adjacent to the right-of-way would be minimized to the extent practicable to satisfy conductor-clearance requirements (NESC and up to 10 years of timber growth). Trees and other vegetation would be removed selectively (e.g., edge feathering) to blend the edge of the right-of-way into adjacent vegetation patterns, as practicable and appropriate.
- To minimize bird collisions, bird diverters would be installed and maintained on groundwires, transmission lines, and/or guywires in areas of heavy bird use (i.e., Rio Grande and other riparian corridors). Groundwires would be replaced with one-inch diameter OHGWs to increase visibility where practicable and appropriate.

Operations and Maintenance

- To limit new disturbance, existing access roads in the Project area would be used to the extent practicable, provided that doing so does not additionally impact resource values.
- Roads would be built as near as possible at right angles to the streams and washes. Culverts or temporary bridges would be installed where necessary. All construction and operations activities shall be conducted in a manner that would minimize disturbance to vegetation, drainage channels, and intermittent or perennial stream banks.
- Preconstruction surveys for species listed under the ESA or specified by the appropriate land management agency as sensitive or of concern would be conducted in areas of known occurrence or suitable habitat. Timing of the surveys would be determined by the construction schedule. Monitoring of construction activities would be required in some areas to ensure that effects to these species are avoided during construction.
- In addition to standard reseeding and recontouring practices, a detailed Project reclamation plan would be developed to mitigate site-specific resource impacts.
- With the exception of emergency repair situations, right-of-way construction, restoration, maintenance, and termination activities in designated areas would be modified or discontinued during sensitive periods (e.g., nesting and breeding periods) for candidate, proposed threatened and endangered, or other sensitive animal species. Sensitive periods, species affected, and areas of concern would be approved in advance of construction or operations by the BLM Authorized Officer.
- To minimize bird collisions, bird diverters would be installed and maintained on groundwires, transmission lines, and/or guywires in areas of heavy bird use (i.e., Rio Grande and other riparian corridors). Groundwires would be replaced with one-inch diameter OHGWs to increase visibility where practicable and appropriate.

4.1.5 Sonoran Population of the Desert Tortoise (*Gopherus agassizii*)

4.1.5.1 Background

The Sonoran population of the Desert Tortoise is a candidate for listing as threatened or endangered under the ESA. Sonoran Desert Tortoises prefer rocky slopes and bajadas at the base of desert mountain ranges in Sonoran desertscrub or semidesert grassland plant communities. Desert Tortoises are surface-active in the Project area primarily between early March and late October, with peak activity during spring and the summer rainy season.

4.1.5.2 Concerns

Desert Tortoises can experience high natural mortality as juveniles, primarily to predators, but adults are very long-lived. Unnatural mortality of adult Desert Tortoises can have long-term effects on population stability. Desert Tortoises are slow-moving, and are at high risk from traffic, construction vehicles, and ground-disturbing activities. Desert Tortoises may be taken illegally as pets, may be injured by domestic dogs, and may be targets of vandalism. Upper Respiratory Tract Disease is an emerging infectious disease that can affect Desert Tortoises,

particularly if infected captive individuals are illegally released into the wild. Raptors and ravens often use transmission structures as nest substrates and hunting perches. Addition of transmission lines to areas where suitable nesting sites were rare or absent can increase predation pressure on juvenile Desert Tortoises.

4.1.5.3 Mitigation

In addition to the measures listed below, impacts to Desert Tortoises will be mitigated in accordance with measures described in Recommended Standard Mitigation Measures for Projects in Sonoran Desert Tortoise Habitat (Arizona Interagency Desert Tortoise Team 2008), Guidelines for Handling Sonoran Desert Tortoises Encountered on Development Projects (AZGFD 2007), and the 2009 BLM Instruction Memorandum No. AZ-2009-010 which details compensation requirements for lost acreage of Desert Tortoise habitat on BLM-administered land.

<u>Design and Engineering</u>

- The alignment of any new access roads or overland route would follow the designated area's landform contours where possible, provided that such alignment does not additionally impact resource values. This would minimize ground disturbance and/or reduce scarring (visual contrast).
- In construction areas where grading is not required, vegetation would be left in place wherever possible, and original contour would be maintained to avoid excessive root damage and allow for regrowth. All existing roads would be left in a condition equal to or better than their condition prior to the construction of the transmission lines, as determined by the appropriate land-managing agency.
- To limit new disturbance, existing access roads in the Project area would be used to the extent practicable, provided that doing so does not additionally impact resource values.
- Prior to construction, all supervisory construction personnel would be instructed on the protection of cultural and ecological resources. To assist in this effort, the construction CIC or a resource specialist would address: (a) federal and state laws regarding antiquities and plants and wildlife, including collection and removal; (b) the importance of these resources and the purpose and necessity of protecting them.
- Preconstruction surveys for species listed under the ESA or specified by the appropriate land management agency as sensitive or of concern would be conducted in areas of known occurrence or suitable habitat. Timing of the surveys would be determined by the construction schedule. Monitoring of construction activities would be required in some areas to ensure that effects to these species are avoided during construction.
- Preconstruction native plant inventories and surveys for noxious weed species as stipulated by the appropriate land-administering agency would also be conducted once transmission line centerline, access roads, and tower sites have been located.
- To reduce ground disturbance and visual contrast, the separation between the transmission lines and existing utilities, roads, or railroads would be minimized to the extent practicable.

Construction

- All vehicle movement outside the right-of-way would typically be restricted to designated access, contractor acquired access, or public roads.
- The boundary of construction activities would typically be predetermined, with activity restricted to and confined within those limits. No paint or permanent discoloring agents would be applied to rocks or vegetation to indicate survey or construction activity limits.
- The alignment of any new access roads or overland route would follow the designated area's landform contours where possible, provided that such alignment does not additionally impact resource values. This would minimize ground disturbance and/or reduce scarring (visual contrast).
- In construction areas where grading is not required, vegetation would be left in place wherever possible, and original contour would be maintained to avoid excessive root damage and allow for regrowth. All existing roads would be left in a condition equal to or better than their condition prior to the construction of the transmission lines, as determined by the appropriate land-managing agency.
- To limit new disturbance, existing access roads in the Project area would be used to the extent practicable, provided that doing so does not additionally impact resource values.
- Construction holes left open overnight would be appropriately fenced or covered to prevent damage to wildlife or livestock.
- In construction areas (e.g., marshalling yards, structure sites, spur roads from existing access roads) where grading is required, surface restoration would be implemented as required by the landowner or BLM Authorized Officer. The method of restoration would normally consist of returning disturbed areas back to their natural contour, reseeding (where required), cross drains installed for erosion control, placing water bars in the road, and filling ditches.
- Prior to construction, all supervisory construction personnel would be instructed on the protection of cultural and ecological resources. To assist in this effort, the construction CIC or a resource specialist would address: (a) federal and state laws regarding antiquities and plants and wildlife, including collection and removal; (b) the importance of these resources and the purpose and necessity of protecting them.
- Preconstruction surveys for species listed under the ESA or specified by the appropriate land management agency as sensitive or of concern would be conducted in areas of known occurrence or suitable habitat. Timing of the surveys would be determined by the construction schedule. Monitoring of construction activities would be required in some areas to ensure that effects to these species are avoided during construction.
- To minimize disturbance to sensitive habitats or resources, access roads required for operations purposes would be gated or otherwise blocked from public access.
- With the exception of emergency repair situations, right-of-way construction, restoration, maintenance, and termination activities in designated areas would be modified or discontinued during sensitive periods (e.g., nesting and breeding periods) for candidate, proposed threatened and endangered, or other sensitive animal species. Sensitive periods,

species affected, and areas of concern would be approved in advance of construction or operations by the BLM Authorized Officer.

Operation and Maintenance

- To limit new disturbance, existing access roads in the Project area would be used to the extent practicable, provided that doing so does not additionally impact resource values.
- Preconstruction surveys for species listed under the ESA or specified by the appropriate land management agency as sensitive or of concern would be conducted in areas of known occurrence or suitable habitat. Timing of the surveys would be determined by the construction schedule. Monitoring of construction activities would be required in some areas to ensure that effects to these species are avoided during construction.
- All new access roads not required for maintenance would be permanently closed using the most effective and least environmentally damaging methods appropriate to that area (e.g., stock piling and replacing topsoil, or rock replacement), with concurrence of the landowner or appropriate land management agency. This would limit new or improved accessibility into the area.
- To minimize disturbance to sensitive habitats or resources, access roads required for operations purposes would be gated or otherwise blocked from public access.
- With the exception of emergency repair situations, right-of-way construction, restoration, maintenance, and termination activities in designated areas would be modified or discontinued during sensitive periods (e.g., nesting and breeding periods) for candidate, proposed threatened and endangered, or other sensitive animal species. Sensitive periods, species affected, and areas of concern would be approved in advance of construction or operations by the BLM Authorized Officer.

4.1.6 Northern Mexican Garter Snake (*Thamnophis eques megalops*)

4.1.6.1 Background

The Northern Mexican Garter Snake, a candidate for listing under the ESA, occurs in streams in Arizona and New Mexico. The species is highly aquatic, and preys primarily on fish, amphibians, and aquatic invertebrates. Mexican Garter Snakes are restricted to high-elevation streams in New Mexico and central Arizona, but occur in Cienega Creek and other low-elevation streams in southern Arizona.

4.1.6.2 Concerns

Northern Mexican Garter Snakes may be affected directly by traffic and ground-disturbing activities that occur near streams. However, the species typically remains in or very near water and away from areas where traffic and ground disturbance associated with the proposed Project would occur. Any effects of the proposed Project that could affect water quality or physically alter streambed habitat could affect the prey base for the species. Snakes are often a target for harassment and injury when encountered by humans.

4.1.6.3 Mitigation

Design and Engineering

- In construction areas where grading is not required, vegetation would be left in place wherever possible, and original contour would be maintained to avoid excessive root damage and allow for regrowth. All existing roads would be left in a condition equal to or better than their condition prior to the construction of the transmission lines, as determined by the appropriate land-managing agency.
- To limit new disturbance, existing access roads in the Project area would be used to the extent practicable, provided that doing so does not additionally impact resource values.
- Prior to construction, all supervisory construction personnel would be instructed on the protection of cultural and ecological resources. To assist in this effort, the construction CIC or a resource specialist would address: (a) federal and state laws regarding antiquities and plants and wildlife, including collection and removal; (b) the importance of these resources and the purpose and necessity of protecting them.
- To the extent practicable, structures would be sited with a minimum distance of 200 feet from streams.
- Preconstruction surveys for species listed under the ESA or specified by the appropriate land management agency as sensitive or of concern would be conducted in areas of known occurrence or suitable habitat. Timing of the surveys would be determined by the construction schedule. Monitoring of construction activities would be required in some areas to ensure that effects to these species are avoided during construction.
- There would be no blading of new access roads in select areas of construction and operations. Existing crossings would be utilized at perennial streams, designated recreational trails, and irrigation channels. Off-road or cross-country access routes would be used for construction and maintenance in select areas. This would minimize ground disturbance impacts. These access routes must be flagged with an easily seen marker, and the route must be approved in advance of use by the BLM Authorized Officer or landowner.
- In designated areas, structures would be placed so as to avoid, and/or to allow conductors to span sensitive features such as riparian areas, water courses, roads, trails, bat roosts, and cultural sites within limits of standard tower design. This would minimize the amount of sensitive features disturbed and/or reduce visual contrast.

Construction

- In construction areas where grading is not required, vegetation would be left in place wherever possible, and original contour would be maintained to avoid excessive root damage and allow for regrowth. All existing roads would be left in a condition equal to or better than their condition prior to the construction of the transmission lines, as determined by the appropriate land-managing agency.
- To limit new disturbance, existing access roads in the Project area would be used to the extent practicable, provided that doing so does not additionally impact resource values.

- Prior to construction, all supervisory construction personnel would be instructed on the protection of cultural and ecological resources. To assist in this effort, the construction CIC or a resource specialist would address: (a) federal and state laws regarding antiquities and plants and wildlife, including collection and removal; (b) the importance of these resources and the purpose and necessity of protecting them.
- Roads would be built as near as possible at right angles to the streams and washes. Culverts or temporary bridges would be installed where necessary. All construction and operations activities shall be conducted in a manner that would minimize disturbance to vegetation, drainage channels, and intermittent or perennial stream banks.
- Preconstruction surveys for species listed under the ESA or specified by the appropriate land management agency as sensitive or of concern would be conducted in areas of known occurrence or suitable habitat. Timing of the surveys would be determined by the construction schedule. Monitoring of construction activities would be required in some areas to ensure that effects to these species are avoided during construction.
- There would be no blading of new access roads in select areas of construction and operations. Existing crossings would be utilized at perennial streams, designated recreational trails, and irrigation channels. Off-road or cross-country access routes would be used for construction and maintenance in select areas. This would minimize ground disturbance impacts. These access routes must be flagged with an easily seen marker, and the route must be approved in advance of use by the BLM Authorized Officer or landowner.
- To minimize disturbance to riparian vegetation and woodlands, and to reduce visual contrast, clearing of trees in and adjacent to the right-of-way would be minimized to the extent practicable to satisfy conductor-clearance requirements (NESC and up to 10 years of timber growth). Trees and other vegetation would be removed selectively (e.g., edge feathering) to blend the edge of the right-of-way into adjacent vegetation patterns, as practicable and appropriate.

Operations and Maintenance

- To limit new disturbance, existing access roads in the Project area would be used to the extent practicable, provided that doing so does not additionally impact resource values.
- Roads would be built as near as possible at right angles to the streams and washes. Culverts or temporary bridges would be installed where necessary. All construction and operations activities shall be conducted in a manner that would minimize disturbance to vegetation, drainage channels, and intermittent or perennial stream banks.
- Preconstruction surveys for species listed under the ESA or specified by the appropriate land management agency as sensitive or of concern would be conducted in areas of known occurrence or suitable habitat. Timing of the surveys would be determined by the construction schedule. Monitoring of construction activities would be required in some areas to ensure that effects to these species are avoided during construction.

4.1.7 Tucson Shovel-nosed Snake (*Chionactis occipitalis klauberi*)

4.1.7.1 Background

The Tucson subspecies of the Western Shovel-nosed Snake is a candidate for listing under the ESA. Western Shovel-nosed Snakes prefer sandy soils, including dune systems, sand flats, and washes. Sand dunes are nearly absent from the range of the Tucson subspecies, which is primarily restricted to the sandy floodplain of the Santa Cruz and Gila rivers, and sandy washes on adjacent lower bajadas. Dominant vegetation within its range consists of creosote-bursage or creosote-mesquite communities. Tucson Shovel-nosed Snakes have a narrow season of peak surface activity in early summer, and remain underground nearly the entire year.

4.1.7.2 Concerns

The primary threat to the Tucson Shovel-nosed Snake has been loss of habitat through conversion of lands for agriculture or urban development. Roads may result in direct mortality of individuals and fragment habitat. The proposed Project may result in permanent losses of some suitable habitat for the species at structure sites and access roads, and would allow increased recreational and maintenance traffic.

4.1.7.3 Mitigation

Design and Engineering

- In construction areas where grading is not required, vegetation would be left in place wherever possible, and original contour would be maintained to avoid excessive root damage and allow for regrowth. All existing roads would be left in a condition equal to or better than their condition prior to the construction of the transmission lines, as determined by the appropriate land-managing agency.
- To limit new disturbance, existing access roads in the Project area would be used to the extent practicable, provided that doing so does not additionally impact resource values.
- Preconstruction surveys for species listed under the ESA or specified by the appropriate land management agency as sensitive or of concern would be conducted in areas of known occurrence or suitable habitat. Timing of the surveys would be determined by the construction schedule. Monitoring of construction activities would be required in some areas to ensure that effects to these species are avoided during construction.
- Preconstruction native plant inventories and surveys for noxious weed species as stipulated by the appropriate land-administering agency would also be conducted once transmission line centerline, access roads, and tower sites have been located.
- To reduce ground disturbance and visual contrast, the separation between the transmission lines and existing utilities, roads, or railroads would be minimized to the extent practicable.

Construction

- All vehicle movement outside the right-of-way would typically be restricted to designated access, contractor acquired access, or public roads.
- The boundary of construction activities would typically be predetermined, with activity restricted to and confined within those limits. No paint or permanent discoloring agents would be applied to rocks or vegetation to indicate survey or construction activity limits.
- To limit new disturbance, existing access roads in the Project area would be used to the extent practicable, provided that doing so does not additionally impact resource values.
- Construction holes left open overnight would be appropriately fenced or covered to prevent damage to wildlife or livestock.
- In construction areas (e.g., marshalling yards, structure sites, spur roads from existing access roads) where grading is required, surface restoration would be implemented as required by the landowner or BLM Authorized Officer. The method of restoration would normally consist of returning disturbed areas back to their natural contour, reseeding (where required), cross drains installed for erosion control, placing water bars in the road, and filling ditches.
- Preconstruction surveys for species listed under the ESA or specified by the appropriate land management agency as sensitive or of concern would be conducted in areas of known occurrence or suitable habitat. Timing of the surveys would be determined by the construction schedule. Monitoring of construction activities would be required in some areas to ensure that effects to these species are avoided during construction.
- Overland access (i.e., drive-and-crush or cut-and-clear) would be used to the greatest extent possible in areas where no grading would be needed to access work areas. Drive-and-crush is vehicular travel to access a site without significantly modifying the landscape. Vegetation is crushed, but not cropped. Soil is compacted, but no surface soil is removed. Cut-and-clear is considered as brushing off (removal) of all vegetation to improve or provide suitable access for equipment. All vegetation is removed using above-ground cutting methods that leave the root crown intact.

Operations and Maintenance

- All vehicle movement outside the right-of-way would typically be restricted to designated access, contractor acquired access, or public roads.
- The boundary of construction activities would typically be predetermined, with activity restricted to and confined within those limits. No paint or permanent discoloring agents would be applied to rocks or vegetation to indicate survey or construction activity limits.
- To limit new disturbance, existing access roads in the Project area would be used to the extent practicable, provided that doing so does not additionally impact resource values.
- Preconstruction surveys for species listed under the ESA or specified by the appropriate land management agency as sensitive or of concern would be conducted in areas of known occurrence or suitable habitat. Timing of the surveys would be determined by the

construction schedule. Monitoring of construction activities would be required in some areas to ensure that effects to these species are avoided during construction.

- Overland access (i.e., drive-and-crush or cut-and-clear) would be used to the greatest extent possible in areas where no grading would be needed to access work areas. Drive-and-crush is vehicular travel to access a site without significantly modifying the landscape. Vegetation is crushed, but not cropped. Soil is compacted, but no surface soil is removed. Cut-and-clear is considered as brushing off (removal) of all vegetation to improve or provide suitable access for equipment. All vegetation is removed using above-ground cutting methods that leave the root crown intact.

4.1.8 ESA-listed and Candidate Fish Species

4.1.8.1 Background

Several ESA-listed and candidate fish species occur in streams that would be crossed by one or more alternatives for the proposed Project. Potential effects and mitigation measures to fish would be nearly identical regardless of species, particularly where multiple species share the same streams; all are discussed together in Section 4.5.2. The following species are known to occur within the Project area, all in Arizona, except for the Rio Grande Silvery Minnow in central New Mexico:

- Spikedace, *Meda fulgida* (Endangered, designated critical habitat). Aravaipa Creek, Hot Springs Canyon, Redfield Canyon.
- Loach Minnow, *Tiaroga cobitis* (Endangered, designated critical habitat). Aravaipa Creek, Hot Springs Canyon, Redfield Canyon.
- Gila Chub, *Gila intermedia* (Endangered, designated critical habitat). Cienega Creek.
- Roundtail Chub, *Gila robusta* (Candidate). Aravaipa Creek.
- Rio Grande Silvery Minnow, *Hybognathus amarus* (Endangered, designated critical habitat). Rio Grande.
- Gila Topminnow, *Poeciliopsis occidentalis* (Endangered). Cienega Creek, tributaries of Aravaipa Creek.
- Desert Pupfish, *Cyprinodon macularius* (Endangered). Tributaries of Aravaipa Creek.

4.1.9 Pima Pineapple Cactus (*Coryphantha scheeri var. robustispina*)

4.1.9.1 Background

The Pima pineapple cactus is listed endangered under the ESA. The plants grow on alluvial fans in the Arizona Upland subdivision of Sonoran desertscrub, along ridges in semidesert grassland, and at the lower edge of southwestern oak woodland, generally below 4,000 feet elevation. The range of the species is limited to the Altar and Santa Cruz Valley watersheds in southern Arizona and northern Mexico.

4.1.9.2 Concerns

The limited distribution and low density of this species, loss of habitat to development, habitat impacts from livestock grazing, pressures from invasive plant infestation, and illegal collecting all threaten the survival of the species. Project development could affect some habitat or individuals of this species southeast of Tucson.

4.1.9.3 Mitigation

Design and Engineering

- In construction areas where grading is not required, vegetation would be left in place wherever possible, and original contour would be maintained to avoid excessive root damage and allow for regrowth. All existing roads would be left in a condition equal to or better than their condition prior to the construction of the transmission lines, as determined by the appropriate land-managing agency.
- To limit new disturbance, existing access roads in the Project area would be used to the extent practicable, provided that doing so does not additionally impact resource values.
- Preconstruction surveys for species listed under the ESA or specified by the appropriate land management agency as sensitive or of concern would be conducted in areas of known occurrence or suitable habitat. Timing of the surveys would be determined by the construction schedule. Monitoring of construction activities would be required in some areas to ensure that effects to these species are avoided during construction.
- Preconstruction native plant inventories and surveys for noxious weed species as stipulated by the appropriate land-administering agency would also be conducted once transmission line centerline, access roads, and tower sites have been located.
- In designated areas, structures would be placed so as to avoid, and/or to allow conductors to span sensitive features such as riparian areas, water courses, roads, trails, bat roosts, and cultural sites within limits of standard tower design. This would minimize the amount of sensitive features disturbed and/or reduce visual contrast.

Construction

- All vehicle movement outside the right-of-way would typically be restricted to designated access, contractor acquired access, or public roads.
- The boundary of construction activities would typically be predetermined, with activity restricted to and confined within those limits. No paint or permanent discoloring agents would be applied to rocks or vegetation to indicate survey or construction activity limits.
- In construction areas where grading is not required, vegetation would be left in place wherever possible, and original contour would be maintained to avoid excessive root damage and allow for regrowth. All existing roads would be left in a condition equal to or better than their condition prior to the construction of the transmission lines, as determined by the appropriate land-managing agency.

- To limit new disturbance, existing access roads in the Project area would be used to the extent practicable, provided that doing so does not additionally impact resource values.
- Preconstruction surveys for species listed under the ESA or specified by the appropriate land management agency as sensitive or of concern would be conducted in areas of known occurrence or suitable habitat. Timing of the surveys would be determined by the construction schedule. Monitoring of construction activities would be required in some areas to ensure that effects to these species are avoided during construction.

Operations and Maintenance

- All vehicle movement outside the right-of-way would typically be restricted to designated access, contractor acquired access, or public roads.
- To limit new disturbance, existing access roads in the Project area would be used to the extent practicable, provided that doing so does not additionally impact resource values.
- Preconstruction surveys for species listed under the ESA or specified by the appropriate land management agency as sensitive or of concern would be conducted in areas of known occurrence or suitable habitat. Timing of the surveys would be determined by the construction schedule. Monitoring of construction activities would be required in some areas to ensure that effects to these species are avoided during construction.

4.1.10 Acuña Cactus (*Echinomastus erectocentrus var. acunensis*)

4.1.10.1 Background

The Acuña cactus is a candidate for listing under the ESA; it occurs in two disjunct regions of Arizona, each with multiple small populations. One population occurs in the Project area north of the Tortolita Mountains in Arizona. The Acuña cactus is restricted to low hills and gravel ridges on granitic or andesite-derived soils in the Arizona Upland subdivision of Sonoran Desertscrub habitat.

4.1.10.2 Concerns

Threats to the Acuña cactus include illegal collecting, habitat loss from mining and land development, and livestock grazing. The Acuña cactus is known to occur near an alternative to the proposed Project, but the population may not occur within the proposed right-of-way. If the species does occur within the right-of-way, individual plants or suitable habitat could potentially be impacted by Project development. Access roads required for the Project could result in increased public access, facilitating off-road vehicle damage to habitat or illegal collection of plants.

4.1.10.3 Mitigation

Design and Engineering

- In construction areas where grading is not required, vegetation would be left in place wherever possible, and original contour would be maintained to avoid excessive root damage and allow for regrowth. All existing roads would be left in a condition equal to or better than their condition prior to the construction of the transmission lines, as determined by the appropriate land-managing agency.
- To limit new disturbance, existing access roads in the Project area would be used to the extent practicable, provided that doing so does not additionally impact resource values.
- Preconstruction surveys for species listed under the ESA or specified by the appropriate land management agency as sensitive or of concern would be conducted in areas of known occurrence or suitable habitat. Timing of the surveys would be determined by the construction schedule. Monitoring of construction activities would be required in some areas to ensure that effects to these species are avoided during construction.
- Preconstruction native plant inventories and surveys for noxious weed species as stipulated by the appropriate land-administering agency would also be conducted once transmission line centerline, access roads, and tower sites have been located.
- In designated areas, structures would be placed so as to avoid, and/or to allow conductors to span sensitive features such as riparian areas, water courses, roads, trails, bat roosts, and cultural sites within limits of standard tower design. This would minimize the amount of sensitive features disturbed and/or reduce visual contrast.

Construction

- All vehicle movement outside the right-of-way would typically be restricted to designated access, contractor acquired access, or public roads.
- The boundary of construction activities would typically be predetermined, with activity restricted to and confined within those limits. No paint or permanent discoloring agents would be applied to rocks or vegetation to indicate survey or construction activity limits.
- In construction areas where grading is not required, vegetation would be left in place wherever possible, and original contour would be maintained to avoid excessive root damage and allow for regrowth. All existing roads would be left in a condition equal to or better than their condition prior to the construction of the transmission lines, as determined by the appropriate land-managing agency.
- To limit new disturbance, existing access roads in the Project area would be used to the extent practicable, provided that doing so does not additionally impact resource values.
- Preconstruction surveys for species listed under the ESA or specified by the appropriate land management agency as sensitive or of concern would be conducted in areas of known occurrence or suitable habitat. Timing of the surveys would be determined by the construction schedule. Monitoring of construction activities would be required in some areas to ensure that effects to these species are avoided during construction.

Operations and Maintenance

- All vehicle movement outside the right-of-way would typically be restricted to designated access, contractor acquired access, or public roads.
- To limit new disturbance, existing access roads in the Project area would be used to the extent practicable, provided that doing so does not additionally impact resource values.
- Preconstruction surveys for species listed under the ESA or specified by the appropriate land management agency as sensitive or of concern would be conducted in areas of known occurrence or suitable habitat. Timing of the surveys would be determined by the construction schedule. Monitoring of construction activities would be required in some areas to ensure that effects to these species are avoided during construction.

4.2 STATE OF NEW MEXICO THREATENED AND ENDANGERED SPECIES

4.2.1 Desert Bighorn Sheep (*Ovis canadensis*)

Please see Section 4.4, Big Game Species, for a discussion of the Desert Bighorn Sheep.

4.2.2 Chihuahua Scurf-pea (*Pediomelum pentaphyllum*)

4.2.2.1 Background

The Chihuahua scurf-pea is a State of New Mexico endangered species, and is also under review for listing under the ESA. The Chihuahua scurf-pea typically inhabits areas of bare ground between vegetation in desert grassland or desertscrub dominated by creosote bush, and is apparently also associated with mesquite in New Mexico. Soils where the plants occur are usually sandy or gravelly loam. The species is known from several disjunct populations in southeastern Arizona and southwestern New Mexico. No records of the species are known within the Project area, but suitable habitat is present over a large portion of the Project area.

4.2.2.2 Concerns

The species is limited to a few relatively small populations. Potential threats include degradation or loss of habitat associated with ground-disturbing activities, which may include energy development, conversion of land for agriculture, and grazing. Invasive plant species could impact suitable habitat for the species, and Project development could impact individual plants and habitat. Surveys for the species are difficult, as the plant rarely supports live growth above ground.

4.2.2.3 Mitigation

Design and Engineering

- In construction areas where grading is not required, vegetation would be left in place wherever possible, and original contour would be maintained to avoid excessive root damage and allow for regrowth. All existing roads would be left in a condition equal to or

better than their condition prior to the construction of the transmission lines, as determined by the appropriate land-managing agency.

- To limit new disturbance, existing access roads in the Project area would be used to the extent practicable, provided that doing so does not additionally impact resource values.
- Preconstruction surveys for species listed under the ESA or specified by the appropriate land management agency as sensitive or of concern would be conducted in areas of known occurrence or suitable habitat. Timing of the surveys would be determined by the construction schedule. Monitoring of construction activities would be required in some areas to ensure that effects to these species are avoided during construction.
- Preconstruction native plant inventories and surveys for noxious weed species as stipulated by the appropriate land-administering agency would also be conducted once transmission line centerline, access roads, and tower sites have been located.
- In designated areas, structures would be placed so as to avoid, and/or to allow conductors to span sensitive features such as riparian areas, water courses, roads, trails, bat roosts, and cultural sites within limits of standard tower design. This would minimize the amount of sensitive features disturbed and/or reduce visual contrast.

Construction

- All vehicle movement outside the right-of-way would typically be restricted to designated access, contractor acquired access, or public roads.
- The boundary of construction activities would typically be predetermined, with activity restricted to and confined within those limits. No paint or permanent discoloring agents would be applied to rocks or vegetation to indicate survey or construction activity limits.
- In construction areas where grading is not required, vegetation would be left in place wherever possible, and original contour would be maintained to avoid excessive root damage and allow for regrowth. All existing roads would be left in a condition equal to or better than their condition prior to the construction of the transmission lines, as determined by the appropriate land-managing agency.
- To limit new disturbance, existing access roads in the Project area would be used to the extent practicable, provided that doing so does not additionally impact resource values.
- Preconstruction surveys for species listed under the ESA or specified by the appropriate land management agency as sensitive or of concern would be conducted in areas of known occurrence or suitable habitat. Timing of the surveys would be determined by the construction schedule. Monitoring of construction activities would be required in some areas to ensure that effects to these species are avoided during construction.

Operations and Maintenance

- All vehicle movement outside the right-of-way would typically be restricted to designated access, contractor acquired access, or public roads.

- To limit new disturbance, existing access roads in the Project area would be used to the extent practicable, provided that doing so does not additionally impact resource values.
- Preconstruction surveys for species listed under the ESA or specified by the appropriate land management agency as sensitive or of concern would be conducted in areas of known occurrence or suitable habitat. Timing of the surveys would be determined by the construction schedule. Monitoring of construction activities would be required in some areas to ensure that effects to these species are avoided during construction.

4.3 MIGRATORY BIRDS

4.3.1 Nesting Birds

4.3.1.1 Background

Nesting birds protected under the MBTA occur in every habitat throughout the Project area (for discussion on raptors, see Section 4.3.2 of this appendix). Several hundred species may winter in the Project area, migrate through the region, or occur infrequently as "accidentals." Fewer species are year-round residents or migrate into the Project area to nest, given the high temperatures and low humidity at lower elevations during the nesting season.

4.3.1.2 Concerns

As presented in Section 2.1.3 of this BPP, the MBTA makes it unlawful to pursue, hunt, take, capture, kill, bait, poison, or possess any migratory bird, or part, nest, or egg of such bird, listed in the MBTA. The foremost concerns for migratory birds are disturbance and human contact, primarily associated with vegetation removal and ground disturbance within construction areas. These activities could disturb migratory birds during critical nesting seasons, potentially resulting in nest abandonment, loss of nests, eggs, or young, in turn resulting in loss of productivity for the breeding season. Temporary and permanent losses of some vegetation, including foraging habitat and trees or shrubs that could be used as nest sites, would occur. Vegetation clearing may allow colonization by invasive plant species that may compete with native vegetation, potentially altering the native plant community and local fire regime.

4.3.1.3 Mitigation

Mitigation measures to protect nesting migratory birds and that meet the requirements of the MBTA have been developed through discussions with the BLM, AZGFD, and NMDGF. The following mitigation measures will help minimize impacts to migratory birds during the design, construction, and operation of the Project.

Design and Engineering

- In construction areas where grading is not required, vegetation would be left in place wherever possible, and original contour would be maintained to avoid excessive root damage and allow for regrowth. All existing roads would be left in a condition equal to or

better than their condition prior to the construction of the transmission lines, as determined by the appropriate land-managing agency.

- To limit new disturbance, existing access roads in the Project area would be used to the extent practicable, provided that doing so does not additionally impact resource values.
- Prior to construction, all supervisory construction personnel would be instructed on the protection of cultural and ecological resources. To assist in this effort, the construction CIC or a resource specialist would address: (a) federal and state laws regarding antiquities and plants and wildlife, including collection and removal; (b) the importance of these resources and the purpose and necessity of protecting them.
- Preconstruction nesting-season surveys for migratory birds, and surveys for Burrowing Owls in suitable habitat, would be conducted as needed to comply with the MBTA.

Construction

- All vehicle movement outside the right-of-way would typically be restricted to designated access, contractor acquired access, or public roads.
- The boundary of construction activities would typically be predetermined, with activity restricted to and confined within those limits. No paint or permanent discoloring agents would be applied to rocks or vegetation to indicate survey or construction activity limits.
- In construction areas where grading is not required, vegetation would be left in place wherever possible, and original contour would be maintained to avoid excessive root damage and allow for regrowth. All existing roads would be left in a condition equal to or better than their condition prior to the construction of the transmission lines, as determined by the appropriate land-managing agency.
- To limit new disturbance, existing access roads in the Project area would be used to the extent practicable, provided that doing so does not additionally impact resource values.
- In construction areas (e.g., marshalling yards, structure sites, spur roads from existing access roads) where grading is required, surface restoration would be implemented as required by the landowner or BLM Authorized Officer. The method of restoration would normally consist of returning disturbed areas back to their natural contour, reseeding (where required), cross drains installed for erosion control, placing water bars in the road, and filling ditches.
- Watering facilities (e.g., tanks, developed springs, water lines, wells, etc.) would be repaired or replaced if they are damaged or destroyed by construction activities to their predisturbed condition, as required by the landowner or land management agency. Temporary watering facilities would be provided for wildlife and livestock until permanent repair or replacement is complete.
- Prior to construction, all supervisory construction personnel would be instructed on the protection of cultural and ecological resources. To assist in this effort, the construction CIC or a resource specialist would address: (a) federal and state laws regarding antiquities and plants and wildlife, including collection and removal; (b) the importance of these resources and the purpose and necessity of protecting them.

- Roads would be built as near as possible at right angles to the streams and washes. Culverts or temporary bridges would be installed where necessary. All construction and operations activities shall be conducted in a manner that would minimize disturbance to vegetation, drainage channels, and intermittent or perennial stream banks.
- Preconstruction nesting-season surveys for migratory birds, and surveys for Burrowing Owls in suitable habitat, would be conducted as needed to comply with the MBTA.
- Overland access (i.e., drive-and-crush or cut-and-clear) would be used to the greatest extent possible in areas where no grading would be needed to access work areas. Drive-and-crush is vehicular travel to access a site without significantly modifying the landscape. Vegetation is crushed, but not cropped. Soil is compacted, but no surface soil is removed. Cut-and-clear is considered as brushing off (removal) of all vegetation to improve or provide suitable access for equipment. All vegetation is removed using above-ground cutting methods that leave the root crown intact.
- With the exception of emergency repair situations, right-of-way construction, restoration, maintenance, and termination activities in designated areas would be modified or discontinued during sensitive periods (e.g., nesting and breeding periods) for candidate, proposed threatened and endangered, or other sensitive animal species. Sensitive periods, species affected, and areas of concern would be approved in advance of construction or operations by the BLM Authorized Officer.

Operation and Maintenance

- All vehicle movement outside the right-of-way would typically be restricted to designated access, contractor acquired access, or public roads.
- To limit new disturbance, existing access roads in the Project area would be used to the extent practicable, provided that doing so does not additionally impact resource values.
- Roads would be built as near as possible at right angles to the streams and washes. Culverts or temporary bridges would be installed where necessary. All construction and operations activities shall be conducted in a manner that would minimize disturbance to vegetation, drainage channels, and intermittent or perennial stream banks.
- Preconstruction nesting-season surveys for migratory birds, and surveys for Burrowing Owls in suitable habitat, would be conducted as needed to comply with the MBTA.
- Overland access (i.e., drive-and-crush or cut-and-clear) would be used to the greatest extent possible in areas where no grading would be needed to access work areas. Drive-and-crush is vehicular travel to access a site without significantly modifying the landscape. Vegetation is crushed, but not cropped. Soil is compacted, but no surface soil is removed. Cut-and-clear is considered as brushing off (removal) of all vegetation to improve or provide suitable access for equipment. All vegetation is removed using above-ground cutting methods that leave the root crown intact.
- With the exception of emergency repair situations, right-of-way construction, restoration, maintenance, and termination activities in designated areas would be modified or discontinued during sensitive periods (e.g., nesting and breeding periods) for candidate, proposed threatened and endangered, or other sensitive animal species. Sensitive periods,

species affected, and areas of concern would be approved in advance of construction or operations by the BLM Authorized Officer.

4.3.2 Raptor and Raptor Nests

4.3.2.1 Background

A variety of raptor species are known to nest and forage in the Project area. *(Once identified, raptor nest locations will be presented on Figure B1-1.)* All raptors native to the United States are protected under the MBTA (see Section 4.3.1 for details on concerns and mitigation measures developed for all migratory birds). In addition to protection under the MBTA, several raptor species occurring in the Project area are also designated as BLM Sensitive Species, including: Bald Eagle (*Haliaeetus leucocephalus*), Golden Eagle (*Aquila chrysaetos*), American Peregrine Falcon (*Falco peregrinus anatum*), Ferruginous Hawks (*Buteo regalis*), Northern Goshawk (*Accipiter gentilis atricapillus*), Cactus Ferruginous Pygmy-owl (*Glaucidium brasilianum cactorum*), and Western Burrowing Owl (*Athene cunicularia hypugaea*). The Bald Eagle and Golden Eagle are also protected under the Bald and Golden Eagle Protection Act, which prohibits the taking, hunting, and trading of these two species.

4.3.2.2 Concerns

The primary concerns regarding raptor nests include: (1) removal of nests and natural nesting substrate along access roads, within the transmission line right-of-way, and at substation sites; (2) disturbance of breeding and nesting behavior, nest failure, and loss of prey resulting from vegetation clearing; (3) behavioral disturbance and displacement of nesting or foraging raptors within and adjacent to the Project area during construction and maintenance; (4) behavioral disturbance and mortality of raptors due to increased public access and associated illegal shooting; and (5) groundwires, conductors, and structures possibly presenting electrocution or collision hazards for raptors.

4.3.2.3 Mitigation

Mitigation measures to minimize potential adverse effects to nesting raptors were developed in consultation with the BLM, AZGFD, and NMDGF. Standard mitigation includes limiting removal of nesting habitat, implementing seasonal restrictions for construction activities, and restricting public use of access roads. Selective mitigation measures for raptors are included below. (*Note: Raptors are protected under the MBTA; therefore, mitigation measures developed for migratory birds [see Section 4.3.1] apply to raptors as well.*)

Design and Engineering

- To limit new disturbance, existing access roads in the Project area would be used to the extent practicable, provided that doing so does not additionally impact resource values.
- Prior to construction, all supervisory construction personnel would be instructed on the protection of cultural and ecological resources. To assist in this effort, the construction CIC or a resource specialist would address: (a) federal and state laws regarding

antiquities and plants and wildlife, including collection and removal; (b) the importance of these resources and the purpose and necessity of protecting them.

- Preconstruction surveys for species listed under the ESA or specified by the appropriate land management agency as sensitive or of concern would be conducted in areas of known occurrence or suitable habitat. Timing of the surveys would be determined by the construction schedule. Monitoring of construction activities would be required in some areas to ensure that effects to these species are avoided during construction. If Bald Eagle or Golden Eagle nests are identified during preconstruction surveys, seasonal restrictions on construction within a specified buffer would be implemented where applicable, according to current USFWS protocols, to comply with the BGEPA. Preconstruction nesting-season surveys for migratory birds, and surveys for Burrowing Owls in suitable habitat, would be conducted as needed to comply with the MBTA.

Construction

- All vehicle movement outside the right-of-way would typically be restricted to designated access, contractor acquired access, or public roads.
- The boundary of construction activities would typically be predetermined, with activity restricted to and confined within those limits. No paint or permanent discoloring agents would be applied to rocks or vegetation to indicate survey or construction activity limits.
- In construction areas where grading is not required, vegetation would be left in place wherever possible, and original contour would be maintained to avoid excessive root damage and allow for regrowth. All existing roads would be left in a condition equal to or better than their condition prior to the construction of the transmission lines, as determined by the appropriate land-managing agency.
- To limit new disturbance, existing access roads in the Project area would be used to the extent practicable, provided that doing so does not additionally impact resource values.
- In construction areas (e.g., marshalling yards, structure sites, spur roads from existing access roads) where grading is required, surface restoration would be implemented as required by the landowner or BLM Authorized Officer. The method of restoration would normally consist of returning disturbed areas back to their natural contour, reseeding (where required), cross drains installed for erosion control, placing water bars in the road, and filling ditches.
- Watering facilities (e.g., tanks, developed springs, water lines, wells, etc.) would be repaired or replaced if they are damaged or destroyed by construction activities to their predisturbed condition, as required by the landowner or land management agency. Temporary watering facilities would be provided for wildlife and livestock until permanent repair or replacement is complete.
- Prior to construction, all supervisory construction personnel would be instructed on the protection of cultural and ecological resources. To assist in this effort, the construction CIC or a resource specialist would address: (a) federal and state laws regarding antiquities and plants and wildlife, including collection and removal; (b) the importance of these resources and the purpose and necessity of protecting them.

- Roads would be built as near as possible at right angles to the streams and washes. Culverts or temporary bridges would be installed where necessary. All construction and operations activities shall be conducted in a manner that would minimize disturbance to vegetation, drainage channels, and intermittent or perennial stream banks.
- Preconstruction surveys for species listed under the ESA or specified by the appropriate land management agency as sensitive or of concern would be conducted in areas of known occurrence or suitable habitat. Timing of the surveys would be determined by the construction schedule. Monitoring of construction activities would be required in some areas to ensure that effects to these species are avoided during construction. If Bald Eagle or Golden Eagle nests are identified during preconstruction surveys, seasonal restrictions on construction within a specified buffer would be implemented where applicable, according to current USFWS protocols, to comply with the BGEPA. Preconstruction nesting-season surveys for migratory birds, and surveys for Burrowing Owls in suitable habitat, would be conducted as needed to comply with the MBTA.
- Overland access (i.e., drive-and-crush or cut-and-clear) would be used to the greatest extent possible in areas where no grading would be needed to access work areas. Drive-and-crush is vehicular travel to access a site without significantly modifying the landscape. Vegetation is crushed, but not cropped. Soil is compacted, but no surface soil is removed. Cut-and-clear is considered as brushing off (removal) of all vegetation to improve or provide suitable access for equipment. All vegetation is removed using above-ground cutting methods that leave the root crown intact.
- With the exception of emergency repair situations, right-of-way construction, restoration, maintenance, and termination activities in designated areas would be modified or discontinued during sensitive periods (e.g., nesting and breeding periods) for candidate, proposed threatened and endangered, or other sensitive animal species. Sensitive periods, species affected, and areas of concern would be approved in advance of construction or operations by the BLM Authorized Officer.

Operation and Maintenance

- All vehicle movement outside the right-of-way would typically be restricted to designated access, contractor acquired access, or public roads.
- To limit new disturbance, existing access roads in the Project area would be used to the extent practicable, provided that doing so does not additionally impact resource values.
- Roads would be built as near as possible at right angles to the streams and washes. Culverts or temporary bridges would be installed where necessary. All construction and operations activities shall be conducted in a manner that would minimize disturbance to vegetation, drainage channels, and intermittent or perennial stream banks.
- Preconstruction surveys for species listed under the ESA or specified by the appropriate land management agency as sensitive or of concern would be conducted in areas of known occurrence or suitable habitat. Timing of the surveys would be determined by the construction schedule. Monitoring of construction activities would be required in some areas to ensure that effects to these species are avoided during construction. If Bald Eagle or Golden Eagle nests are identified during preconstruction surveys, seasonal restrictions

on construction within a specified buffer would be implemented where applicable, according to current USFWS protocols, to comply with the BGEPA. Preconstruction nesting-season surveys for migratory birds, and surveys for Burrowing Owls in suitable habitat, would be conducted as needed to comply with the MBTA.

- Overland access (i.e., drive-and-crush or cut-and-clear) would be used to the greatest extent possible in areas where no grading would be needed to access work areas. Drive-and-crush is vehicular travel to access a site without significantly modifying the landscape. Vegetation is crushed, but not cropped. Soil is compacted, but no surface soil is removed. Cut-and-clear is considered as brushing off (removal) of all vegetation to improve or provide suitable access for equipment. All vegetation is removed using above-ground cutting methods that leave the root crown intact.
- With the exception of emergency repair situations, right-of-way construction, restoration, maintenance, and termination activities in designated areas would be modified or discontinued during sensitive periods (e.g., nesting and breeding periods) for candidate, proposed threatened and endangered, or other sensitive animal species. Sensitive periods, species affected, and areas of concern would be approved in advance of construction or operations by the BLM Authorized Officer.

Figure B1-1. Raptor nest locations (To Be Determined)

4.3.3 Migratory Birds at Risk of Collision with or Electrocution from Project Facilities

4.3.3.1 Background

Bird collisions with man-made structures are a substantial portion of overall bird mortality across North America (Erickson et al. 2005). Glass windows and tall, lighted structures such as communications towers appear to cause the highest levels of collisions, much higher than observed for transmission lines. The majority of birds fly well above the height of transmission structures during migration. However, site-specific conditions or poor weather can substantially increase the risk.

In the Southwest, major bird migration routes often follow rivers, such as the Rio Grande in New Mexico and the San Pedro River in Arizona. Particularly along the Rio Grande, large numbers of wintering waterfowl and other birds concentrate in protected roost areas and forage in surrounding farmland. Large numbers of Sandhill Cranes concentrate in the Sulphur Springs Valley around Willcox, Arizona. Several other locations, such as seasonally flooded wetlands, may support smaller concentrations of birds in years with high winter rainfall.

4.3.3.2 Concerns

Large-bodied birds that do not maneuver well when in flight are at the highest risk for collision with transmission lines, in contrast with nocturnal migrant songbirds that are at the highest risk for collision with communication towers. Within the Project area, waterfowl and Sandhill Cranes occur in high numbers in multiple locations. Areas with high daily bird use, including many takeoffs and landings, increase the collision risk further, as the birds regularly pass through the height of the wire zone, unlike longer flights that typically take place at higher altitudes

High-voltage conductors are often adequately visible to birds in flight, although some collisions may still occur in poor visibility. However, the overhead groundwires used for lightning protection and communications is a much smaller gauge, and birds that successfully avoid the conductor may collide with the groundwire.

Properly designed 500 kV facilities typically present little to no risk of electrocution to birds, as the clearance between all energized components and potential paths to ground is inherently required to be greater than the wingspan of any bird native to the Project area. Substations where connections to lower-voltage sources exist may present an electrocution risk, if not properly designed.

4.3.3.3 Mitigation

The following mitigation measures aid in reducing the risk of collision or electrocution to migratory birds, with the greatest focus on increasing the overall visibility of structures, conductors, groundwires, and guywires in areas of high bird use.

Design and Engineering

- Electrical facility design would be in accordance with "Suggested Practices for Raptor Protection on Power Lines" (Avian Power Line Interaction Committee 2006).
- Modified tower design or alternate tower type would be used to minimize ground disturbance, operational conflicts, visual contrast, and/or avian conflicts.
- In designated areas, structures would be placed so as to avoid, and/or to allow conductors to span sensitive features such as riparian areas, water courses, roads, trails, bat roosts, and cultural sites within limits of standard tower design. This would minimize the amount of sensitive features disturbed and/or reduce visual contrast.
- To reduce ground disturbance and visual contrast, the separation between the transmission lines and existing utilities, roads, or railroads would be minimized to the extent practicable.

Construction

- Roads would be built as near as possible at right angles to the streams and washes. Culverts or temporary bridges would be installed where necessary. All construction and operations activities shall be conducted in a manner that would minimize disturbance to vegetation, drainage channels, and intermittent or perennial stream banks.
- To minimize disturbance to riparian vegetation and woodlands, and to reduce visual contrast, clearing of trees in and adjacent to the right-of-way would be minimized to the extent practicable to satisfy conductor-clearance requirements (NESC and up to 10 years of timber growth). Trees and other vegetation would be removed selectively (e.g., edge feathering) to blend the edge of the right-of-way into adjacent vegetation patterns, as practicable and appropriate.
- To minimize bird collisions, bird diverters would be installed and maintained on groundwires, transmission lines, and/or guywires in areas of heavy bird use (i.e., Rio Grande and other riparian corridors). Groundwires would be replaced with one-inch diameter OHGWs to increase visibility where practicable and appropriate. (*Note: once identified, locations requiring bird diverters will be presented in Figure B1-2 and Table B1-1*.)

Operation and Maintenance

- Roads would be built as near as possible at right angles to the streams and washes. Culverts or temporary bridges would be installed where necessary. All construction and operations activities shall be conducted in a manner that would minimize disturbance to vegetation, drainage channels, and intermittent or perennial stream banks.
- Modified tower design or alternate tower type would be used to minimize ground disturbance, operational conflicts, visual contrast, and/or avian conflicts.
- To minimize bird collisions, bird diverters would be installed and maintained on groundwires, transmission lines, and/or guywires in areas of heavy bird use (i.e., Rio

Grande and other riparian corridors). Groundwires would be replaced with one-inch diameter OHGWs to increase visibility where practicable and appropriate. (*Note: once identified, locations requiring bird diverters will be presented in Figure B1-2 and Table B1-1*.)

Figure B1-2. Migratory bird with flight diverter locations

Table B1-1. Flight Diverter Placement	
General Location	**Tower Numbers**
To Be Determined	

4.4 BIG GAME SPECIES

4.4.1 Introduction

Generally, impacts to big game mammals may include effects to habitat and disturbance of animals (e.g., movement, foraging, breeding, birthing, or bedding). Individual animals on roadways during construction or maintenance activities are at greater risk for collisions, and increased noise due to the presence of humans and construction activities in the Project area may disturb large mammals. Construction debris and trash may be attractive to wildlife and may attract predators such as Coyotes. Development of new access required for Project construction, operation, and maintenance may have post-development impacts from increased maintenance and recreational access in these areas.

Big game animals occurring in the Project area that were identified by the BLM, AZGFD, and NMDGF are Mountain Lion, Black Bear, Mule Deer, White-tailed Deer, Javelina, Wild Turkey, Pronghorn, and Desert Bighorn Sheep. However, only the Pronghorn and Desert Bighorn Sheep were identified as having specific, highly sensitive areas where selective mitigation measures would be necessary. Standard mitigation measures will assist in reducing impacts to all big game species, and the following discussion details specific concerns and mitigation measures for Pronghorn and Desert Bighorn Sheep.

4.4.2 Pronghorn

4.4.2.1 Background

The American Pronghorn (*Antilocapra americana americana*) is an Arizona BLM priority big game species. The American Pronghorn requires long-range visibility to avoid predators, so prefers open grasslands, or grassland with low shrubs where the majority of the vegetation has a low profile. A population of approximately 100 Pronghorn is resident in the northern Sulphur Springs Valley, and is actively managed by the AZGFD. A smaller herd is present on Allen Flat to the west of the Sulphur Springs Valley.

The Bonita Grasslands Restoration Project was initiated by the AZGFD in partnership with private land owners, on Arizona State Trust Lands and private land in the northern Sulphur

Springs Valley, located north of Willcox, Arizona. The purpose of the project is to restore 20,000 acres of grassland habitat over the next 10 to 15 years, ultimately aiming to restore 100,000 acres of grassland habitat in the area. The restoration will support the existing Pronghorn population and important fawning areas, and restore connectivity between the Bonita and Southern Greasewood Pronghorn herds (AZGFD 2010).

4.4.2.2 Concerns

Pronghorns have been affected by long-term invasion of semidesert grasslands by shrubs such as mesquite, due in part to a combination of fire suppression and grazing practices. Additional habitat has been lost to development and agriculture. Remaining patches of suitable habitat are often isolated by large, unsuitable areas. Major roads, railways, canals, and fences can form barriers. Pronghorns prefer to cross under fences, and require suitable fence designs to allow movement. Pronghorns in the Project area are year-round residents, and would be highly sensitive to disturbance during the fawning season.

4.4.2.3 Mitigation

Mitigation measures for this species are presented together with those for Desert Bighorn Sheep (Section 4.4.3.3).

4.4.3 Desert Bighorn Sheep

4.4.3.1 Background

Within the New Mexico portion of the Project area, there are several areas managed, in part, for the preservation of Desert Bighorn Sheep and their habitat. The Sevilleta National Wildlife Refuge, located approximately 20 miles north of Socorro, provides an environment within the Chihuahuan Desert that is the focus of long-term ecological research efforts. Desert Bighorn Sheep and Pronghorn are two of the sensitive species occurring within the refuge (USFWS 2011). A BLM Special Recreation Management Area (SRMA) known as *The Box*, located just southwest of Socorro, includes protection of Desert Bighorn Sheep habitat among the various SRMA management objectives. West of the Rio Grande between Polvadera Mountain and Socorro Peak, is a BLM-identified migration corridor for a reintroduced population of Desert Bighorn Sheep.

4.4.3.2 Concerns

Desert Bighorn Sheep prefer rugged terrain with high visibility. Areas with high tree densities provide cover for predators, and are not preferred habitat. Vegetation management needs within a transmission line right-of-way may provide some degree of benefit to the species by removing predator cover, if other adverse effects are adequately reduced. Bighorn Sheep are sensitive to disturbance during the fawning season, and may be affected by construction or maintenance activities as well as by recreational traffic using new access roads.

4.4.3.3 Mitigation

The following mitigation measures may apply to either Pronghorns or Desert Bighorn Sheep, although the measures would differ in the timing and locations where they are applied. Similar measures may be employed for other big game species, if determined to be appropriate.

Design and Engineering

- In construction areas where grading is not required, vegetation would be left in place wherever possible, and original contour would be maintained to avoid excessive root damage and allow for regrowth. All existing roads would be left in a condition equal to or better than their condition prior to the construction of the transmission lines, as determined by the appropriate land-managing agency.
- Prior to construction, all supervisory construction personnel would be instructed on the protection of cultural and ecological resources. To assist in this effort, the construction CIC or a resource specialist would address: (a) federal and state laws regarding antiquities and plants and wildlife, including collection and removal; (b) the importance of these resources and the purpose and necessity of protecting them.

Construction

- All vehicle movement outside the right-of-way would typically be restricted to designated access, contractor acquired access, or public roads.
- In construction areas where grading is not required, vegetation would be left in place wherever possible, and original contour would be maintained to avoid excessive root damage and allow for regrowth. All existing roads would be left in a condition equal to or better than their condition prior to the construction of the transmission lines, as determined by the appropriate land-managing agency.
- Construction holes left open overnight would be appropriately fenced or covered to prevent damage to wildlife or livestock.
- In construction areas (e.g., marshalling yards, structure sites, spur roads from existing access roads) where grading is required, surface restoration would be implemented as required by the landowner or BLM Authorized Officer. The method of restoration would normally consist of returning disturbed areas back to their natural contour, reseeding (where required), cross drains installed for erosion control, placing water bars in the road, and filling ditches.
- Watering facilities (e.g., tanks, developed springs, water lines, wells, etc.) would be repaired or replaced if they are damaged or destroyed by construction activities to their predisturbed condition, as required by the landowner or land management agency. Temporary watering facilities would be provided for wildlife and livestock until permanent repair or replacement is complete.
- Prior to construction, all supervisory construction personnel would be instructed on the protection of cultural and ecological resources. To assist in this effort, the construction CIC or a resource specialist would address: (a) federal and state laws regarding

antiquities and plants and wildlife, including collection and removal; (b) the importance of these resources and the purpose and necessity of protecting them.

- Overland access (i.e., drive-and-crush or cut-and-clear) would be used to the greatest extent possible in areas where no grading would be needed to access work areas. Drive-and-crush is vehicular travel to access a site without significantly modifying the landscape. Vegetation is crushed, but not cropped. Soil is compacted, but no surface soil is removed. Cut-and-clear is considered as brushing off (removal) of all vegetation to improve or provide suitable access for equipment. All vegetation is removed using above-ground cutting methods that leave the root crown intact.

Operation and Maintenance

- All vehicle movement outside the right-of-way would typically be restricted to designated access, contractor acquired access, or public roads.
- Overland access (i.e., drive-and-crush or cut-and-clear) would be used to the greatest extent possible in areas where no grading would be needed to access work areas. Drive-and-crush is vehicular travel to access a site without significantly modifying the landscape. Vegetation is crushed, but not cropped. Soil is compacted, but no surface soil is removed. Cut-and-clear is considered as brushing off (removal) of all vegetation to improve or provide suitable access for equipment. All vegetation is removed using above-ground cutting methods that leave the root crown intact.
- All new access roads not required for maintenance would be permanently closed using the most effective and least environmentally damaging methods appropriate to that area (e.g., stock piling and replacing topsoil, or rock replacement), with concurrence of the landowner or appropriate land management agency. This would limit new or improved accessibility into the area.
- To minimize disturbance to sensitive habitats or resources, access roads required for operations purposes would be gated or otherwise blocked from public access.
- With the exception of emergency repair situations, right-of-way construction, restoration, maintenance, and termination activities in designated areas would be modified or discontinued during sensitive periods (e.g., nesting and breeding periods) for candidate, proposed threatened and endangered, or other sensitive animal species. Sensitive periods, species affected, and areas of concern would be approved in advance of construction or operations by the BLM Authorized Officer.

4.5 EFFECTS TO HABITAT

4.5.1 Fragmentation and Other Effects to Terrestrial Habitat

4.5.1.1 Background

Many wildlife species of conservation concern are those that require large, intact blocks of suitable habitat. They may have large home range requirements, may be sensitive to noise and other forms of disturbance, or require microclimate conditions that are not found in fragmented

habitat (e.g., humid microclimates within mature riparian woodlands). Removal of portions of habitat blocks may have effects that extend into adjacent, undisturbed habitat. Removal of a portion of a closed-canopy woodland can increase light levels and decrease humidity levels within the newly exposed forest interior. Open, arid, or semiarid vegetation communities may not be affected by microclimate changes, although access roads may affect surrounding vegetation through deposition of dust or serve as a source of invasive plants.

The creation of physical barriers, or locations that wildlife may perceive as hazardous, can affect dispersal between important seasonal habitats or may isolate portions of the home ranges of individual animals. Barriers that isolate small portions of larger blocks may cause the loss of some species from the resulting fragments, if insufficient habitat remains in any or all fragments to maintain a viable population.

4.5.1.2 Concerns

Within the Project area, physical effect to microclimate are unlikely to be substantial in most cases, as upland vegetation communities are typically open and exposed to temperature and humidity extremes. Closed-canopy vegetation where physical effects of fragmentation may occur includes riparian woodlands, and potentially includes dense patches of juniper woodland or pine-oak woodland at higher elevations within the Project area.

Transmission lines and associated disturbance within the right-of-way do not physically prevent most wildlife from dispersal, except under certain circumstances when fencing may be required for security or to protect the interests of landowners. However, the access road and maintained vegetation within the right-of-way may be avoided by animals that prefer dense cover, such as some small mammals.

4.5.1.3 Mitigation

<u>Design and Engineering</u>

- The alignment of any new access roads or overland route would follow the designated area's landform contours where possible, provided that such alignment does not additionally impact resource values. This would minimize ground disturbance and/or reduce scarring (visual contrast).
- In construction areas where grading is not required, vegetation would be left in place wherever possible, and original contour would be maintained to avoid excessive root damage and allow for regrowth. All existing roads would be left in a condition equal to or better than their condition prior to the construction of the transmission lines, as determined by the appropriate land-managing agency.
- To limit new disturbance, existing access roads in the Project area would be used to the extent practicable, provided that doing so does not additionally impact resource values.
- Preconstruction native plant inventories and surveys for noxious weed species as stipulated by the appropriate land-administering agency would also be conducted once transmission line centerline, access roads, and tower sites have been located.

- Surveys for bat roosts would be conducted within ¼ mile of the Project right-of-way in areas that potentially contain caves, karst features, or mines. Occupied bat roosts would be avoided.

Construction

- All vehicle movement outside the right-of-way would typically be restricted to designated access, contractor acquired access, or public roads.
- The boundary of construction activities would typically be predetermined, with activity restricted to and confined within those limits. No paint or permanent discoloring agents would be applied to rocks or vegetation to indicate survey or construction activity limits.
- The alignment of any new access roads or overland route would follow the designated area's landform contours where possible, provided that such alignment does not additionally impact resource values. This would minimize ground disturbance and/or reduce scarring (visual contrast).
- In construction areas where grading is not required, vegetation would be left in place wherever possible, and original contour would be maintained to avoid excessive root damage and allow for regrowth. All existing roads would be left in a condition equal to or better than their condition prior to the construction of the transmission lines, as determined by the appropriate land-managing agency.
- To limit new disturbance, existing access roads in the Project area would be used to the extent practicable, provided that doing so does not additionally impact resource values.
- In construction areas (e.g., marshalling yards, structure sites, spur roads from existing access roads) where grading is required, surface restoration would be implemented as required by the landowner or BLM Authorized Officer. The method of restoration would normally consist of returning disturbed areas back to their natural contour, reseeding (where required), cross drains installed for erosion control, placing water bars in the road, and filling ditches.
- During operation of the transmission lines, the right-of-way would be maintained free of nonbiodegradable debris. Slash would be left in place or disposed of in accordance with requirements of the land owner or management agency.
- Surveys for bat roosts would be conducted within ¼ mile of the Project right-of-way in areas that potentially contain caves, karst features, or mines. Occupied bat roosts would be avoided.
- Overland access (i.e., drive-and-crush or cut-and-clear) would be used to the greatest extent possible in areas where no grading would be needed to access work areas. Drive-and-crush is vehicular travel to access a site without significantly modifying the landscape. Vegetation is crushed, but not cropped. Soil is compacted, but no surface soil is removed. Cut-and-clear is considered as brushing off (removal) of all vegetation to improve or provide suitable access for equipment. All vegetation is removed using above-ground cutting methods that leave the root crown intact.

- In addition to standard reseeding and recontouring practices, a detailed Project reclamation plan would be developed to mitigate site-specific resource impacts.
- To minimize disturbance to sensitive habitats or resources, access roads required for operations purposes would be gated or otherwise blocked from public access.
- Helicopter placement of structures may be used to reduce ground disturbance (e.g., to minimize soil erosion, vegetation loss, and visual impacts).

Operation and Maintenance

- All vehicle movement outside the right-of-way would typically be restricted to designated access, contractor acquired access, or public roads.
- To limit new disturbance, existing access roads in the Project area would be used to the extent practicable, provided that doing so does not additionally impact resource values.
- During operation of the transmission lines, the right-of-way would be maintained free of nonbiodegradable debris. Slash would be left in place or disposed of in accordance with requirements of the land owner or management agency.
- Overland access (i.e., drive-and-crush or cut-and-clear) would be used to the greatest extent possible in areas where no grading would be needed to access work areas. Drive-and-crush is vehicular travel to access a site without significantly modifying the landscape. Vegetation is crushed, but not cropped. Soil is compacted, but no surface soil is removed. Cut-and-clear is considered as brushing off (removal) of all vegetation to improve or provide suitable access for equipment. All vegetation is removed using above-ground cutting methods that leave the root crown intact.
- All new access roads not required for maintenance would be permanently closed using the most effective and least environmentally damaging methods appropriate to that area (e.g., stock piling and replacing topsoil, or rock replacement), with concurrence of the landowner or appropriate land management agency. This would limit new or improved accessibility into the area.
- In addition to standard reseeding and recontouring practices, a detailed Project reclamation plan would be developed to mitigate site-specific resource impacts.
- To minimize disturbance to sensitive habitats or resources, access roads required for operations purposes would be gated or otherwise blocked from public access.

4.5.2 Effects to Aquatic Systems and Riparian Habitat

4.5.2.1 Background

A number of special-status species are strongly associated with or restricted to aquatic habitats. Aquatic habitats are rare in the arid Southwest, particularly after decades of groundwater withdrawals and diversion or impoundment of surface water to support agriculture and urban development. Many of the remaining streams and rivers are highly altered physically, and may contain a number of species of introduced plants and wildlife. Those that remain in a relatively natural state have a very high value to wildlife.

The following permanent rivers and streams may be crossed by the proposed Project, although permanent water may not be present at some crossing locations. Isolated springs, ephemeral washes, livestock tanks, ornamental ponds, canals, and other sites may also provide temporary or permanent aquatic habitat. Aquatic sites will be shown in Figure B1-3, as this information is developed further.

- Rio Grande (Socorro County, New Mexico)
- Aravaipa Creek (Graham County, Arizona)
- Hot Springs Canyon (Cochise County, Arizona)
- Redfield Canyon (Graham County, Arizona)
- San Pedro River (Cochise and Pinal counties, Arizona)
- Cienega Creek (Pima County, Arizona)
- Pantano Wash – Rillito River (Pima County, Arizona)
- Santa Cruz River (Pima County, Arizona)

Table B1-2 lists special-status species associated with aquatic habitat that may occur in the Project area, the features of aquatic habitat they require, and whether they may occur in New Mexico or Arizona. The following discussion of concerns and mitigation measures may apply to any or all of these special-status species, as well as any other species dependent on aquatic and riparian habitat.

Table B1-2. DRAFT Special-status Aquatic and Riparian Species That May Occur Within the Project Area

Species	Status	Use of Aquatic Habitat	Occurrence in Project Area
MAMMALS			
Western Red Bat *Lasiurus blossevillii*	FS; SC; WSC; NMS; SGCN (AZ, NM); PVS	Roosts in riparian woodlands.	AZ
Western Yellow Bat *Lasiurus xanthinus*	NMT; FS; WSC; SGCN (AZ, NM); PVS	Roosts in riparian woodlands.	AZ
American Beaver *Castor canadensis*	SGCN (NM, AZ)	Requires permanent water with small-diameter trees.	NM, AZ
BIRDS			
Eared Grebe *Podiceps nigricollis*	SGCN (NM, AZ)	Requires permanent standing water.	NM, AZ
Double-crested Cormorant *Phalacrocorax occidentalis*	SGCN (AZ)	Requires permanent standing water or large rivers.	NM, AZ
Neotropic Cormorant *Phalacrocorax brasilianus*	NMT, FS, SGCN (NM)	Requires permanent standing water or large rivers.	NM, AZ
Great Egret *Ardea alba*	SGCN (AZ)	Uses a variety of wetlands or irrigated fields.	NM, AZ
American Bittern *Botaurus lentiginosus*	SGCN (NM, AZ), BCC	Requires permanent standing water with marshy vegetation.	NM, AZ
Snowy Egret *Egretta thula*	SGCN (AZ)	Uses a variety of wetlands or irrigated fields.	NM, AZ
Least Bittern *Ixobrychus exilis*	WSC	Requires permanent standing water with marshy vegetation.	NM, AZ

Table B1-2. DRAFT Special-status Aquatic and Riparian Species That May Occur Within the Project Area			
Species	**Status**	**Use of Aquatic Habitat**	**Occurrence in Project Area**
White-faced Ibis *Plegadis chihi*	BLMS (NM), FS, SC, SGCN (NM)	Uses a variety of wetlands or irrigated fields.	NM, AZ
Black-bellied Whistling-duck *Dendrocygna autumnalis*	WSC, SGCN (AZ)	Prefers riparian areas or forested wetlands.	AZ
Wood Duck *Aix sponsa*	SGCN (AZ)	Requires permanent standing water and mature woodlands.	NM, AZ
Northern Pintail *Anas acuta*	SGCN (NM, AZ)	Requires permanent standing water.	NM, AZ
Osprey *Pandion haliaetus*	WSC, SGCN (NM, AZ)	Forages at bodies of water with large fish present.	NM, AZ
Bald Eagle *Haliaeetus leucocephalus*	BGEPA, DM, SC, NMT, BLMS, FS, SGCN (NM, AZ), BCC	Forages at bodies of water with large fish present.	NM, AZ
Zone-tailed Hawk *Buteo albonotatus*	FS	Associated with riparian woodlands.	NM, AZ
Common Black Hawk *Buteogallus anthracinus*	NMT, FS, WSC, SGCN (NM, AZ), BCC	Associated with riparian woodlands.	AZ
Yuma Clapper Rail *Rallus longirostris yumanensis*	E, WSC, SGCN (AZ)	Requires permanent standing water with marshy vegetation.	AZ
Sandhill Crane *Grus canadensis*	SGCN (NM)	Uses a variety of wetlands or irrigated fields.	NM, AZ
Western Snowy Plover *Charadrius alexandrinus nivosus*	SGCN (NM, AZ), BCC	Uses open, sandy shorelines of wetlands.	NM, AZ
Piping Plover *Charadrius melodus*	T (CH), NMT	Uses open, sandy shorelines of wetlands.	NM, AZ
Long-billed Curlew *Numenius americanus americanus*	SGCN (NM), BCC	Uses shallow wetlands or irrigated fields.	NM, AZ
American Avocet *Recurvirostra americana*	SGCN (AZ)	Forages in shallow wetlands and flooded fields.	AZ
Wilson's Phalarope *Phalaropus tricolor*	SGCN (NM)	Forages in shallow, open water.	NM
Wilson's Snipe *Gallinago delicate*	SGCN (AZ)	Uses wet grasslands and dense vegetation near water.	NM, AZ
Black Tern *Chlidonias niger*	BLMS (NM)	Forages over wetlands and irrigated fields.	NM
Belted Kingfisher *Megaceryle alcyon*	WSC	Forages at permanent bodies of water with small fish present.	NM, AZ
Yellow-billed Cuckoo *Coccyzus americanus*	C; FS; WSC; NMS; PVS; SGCN (AZ); BCC	Requires large blocks of intact, mature riparian woodland.	NM, AZ

Table B1-2. DRAFT Special-status Aquatic and Riparian Species That May Occur Within the Project Area			
Species	**Status**	**Use of Aquatic Habitat**	**Occurrence in Project Area**
Southwestern Willow Flycatcher *Empidonax traillii extimus*	E (CH); NME; WSC; SGCN (AZ, NM); PVS	Requires seasonally flooded, dense riparian woodland.	NM, AZ
Tropical Kingbird *Tyrannus melancholicus*	WSC	Associated with riparian woodlands.	AZ
Thick-billed Kingbird *Tyrannus crassirostris*	NME; FS; WSC; SGCN (AZ, NM)	Associated with riparian woodlands.	AZ
AMPHIBIANS			
Barred Tiger Salamander *Ambystoma tigrinum mavortium* (*nebulosum*)	SGCN (NM, AZ)	Reproduces in seasonally flooded ponds and streams.	NM, AZ
Western Chorus Frog *Pseudacris triseriata*	SGCN (NM, AZ)	Reproduces in a variety of aquatic sites.	NM
Plains Leopard Frog *Lithobates blairi*	FS, WSC, SGCN (NM, AZ)	Requires permanent or near-permanent wetlands.	NM, AZ
Lowland Leopard Frog *Lithobates yavapaiensis*	NME, BLMS (NM, AZ), FS, SC, WSC, SGCN (NM, AZ), PVS	Requires permanent or near-permanent wetlands.	AZ
Great Plains Narrow-mouthed Toad *Gastrophryne olivacea*	NME, BLMS (AZ), FS, WSC, SGCN (NM, AZ)	Reproduces in seasonally flooded pools.	AZ
REPTILES			
Western Painted Turtle *Chrysemys picta bellii*	SGCN (NM)	Associated with large bodies of permanent water.	NM
Big Bend Slider *Trachemys gaigeae*	NMS, SGCN (NM)	Associated with large bodies of permanent water.	NM
Yellow Mud Turtle *Kinosternon flavescens*	SGCN (AZ)	Associated with permanent or near-permanent streams.	NM, AZ
Sonora Mud Turtle *Kinosternon sonoriense sonoriense*	BLMS (AZ), SGCN (NM, AZ)	Associated with permanent or near-permanent streams.	NM, AZ
Black-necked Garter Snake *Thamnophis cyrtopsis*	SGCN (AZ)	May occur near a wide range of aquatic habitats.	NM, AZ
Northern Mexican Garter Snake *Thamnophis eques megalops*	C, NME, FS, WSC, SGCN (NM, AZ), PVS	Requires permanent or near-permanent wetlands.	AZ
FISH			
Longfin Dace *Agosia chrysogaster*	BLMS (NM, AZ), FS, SC, SGCN (AZ), PVS	Present in Aravaipa Creek and Cienega Creek.	AZ
Gila Chub *Gila intermedia*	E (CH), NME, WSC, SGCN (NM, AZ), PVS	Present in Aravaipa Creek and Cienega Creek.	AZ
Roundtail Chub (Lower Colorado River Basin DPS) *Gila robusta*	C, NME, FS, WSC, SGCN (NM, AZ)	Present in Aravaipa Creek.	AZ

Table B1-2. DRAFT Special-status Aquatic and Riparian Species That May Occur Within the Project Area			
Species	**Status**	**Use of Aquatic Habitat**	**Occurrence in Project Area**
Rio Grande Silvery Minnow *Hybognathus amarus*	E (CH), NME, SGCN (NM)	Present in the Rio Grande.	NM
Smallmouth Buffalo *Ictiobus bubalus*	SGCN (NM)	Present in the Rio Grande.	NM
Spikedace *Meda fulgida*	E (CH), NME, WSC, SGCN (NM, AZ)	Present in Aravaipa Creek, Hot Springs Canyon, and Redfield Canyon.	AZ
Speckled Dace *Rhinichthys osculus*	BLMS (NM, AZ)	Present in Aravaipa Creek.	AZ
Loach Minnow *Tiaroga cobitis*	E (CH), NMT, WSC, SGCN (NM, AZ)	Present in Aravaipa Creek, Hot Springs Canyon, and Redfield Canyon.	AZ
Desert Sucker *Catostomus clarki*	BLMS (NM, AZ), FS, SC, NMS, SGCN (NM, AZ), PVS	Present in Aravaipa Creek.	AZ
Sonora Sucker *Catostomus insignis*	BLMS (NM, AZ), FS, SC, NMS, SGCN (NM, AZ), PVS	Present in Aravaipa Creek.	AZ
Rio Grande Sucker *Catostomus plebeis*	FS, SC, SGCN (NM)	Present in the Rio Grande.	NM
Blue Catfish *Ictalurus furcatus*	SGCN (NM)	Present in the Rio Grande.	NM
Desert Pupfish *Cyprinodon macularius*)	E (CH), WSC, SGCN (AZ), PVS	Present in tributaries to Aravaipa Creek.	AZ
Gila Topminnow *Poeciliopsis occidentalis*	E, NMT, WSC, SGCN (NM, AZ), PVS	Present in Cienega Creek and tributaries to Aravaipa Creek.	AZ
INVERTEBRATES			
Hydrobiid Springsnails *Pyrgulopsis* spp.	BLMS (AZ)	May occur in isolated springs.	AZ
Socorro Springsnail *Pyrgulopsis neomexicana*	E, NME, SGCN (NM)	Restricted to a single spring near Socorro, New Mexico.	NM
Moore's Fairy Shrimp *Streptocephalus moorei*	NMS, SGCN (NM)	Occurs in seasonally flooded ponds and closed basins.	NM
Bowman's Fairy Shrimp *Streptocephalus thomasbowmani*	SGCN (NM)	Occurs in seasonally flooded closed basins.	NM
Lynch Tadpole Shrimp *Lepidurus lemmoni*	SGCN (NM)	Occurs in seasonally flooded ponds and closed basins.	NM
Maricopa Tiger Beetle *Cicindela oregona maricopa*	SC	Requires wet, sandy soils adjacent to water.	AZ
PLANTS			
Giant Sedge *Carex spissa* var. *ultra*	BLMS (AZ)	Saturated soils at seeps, springs, and streams.	AZ
Playa Spider Plant *Cleome multicaulis*	NME, BLMS (NM), SC	Saline playas and springs.	NM

Table B1-2. DRAFT Special-status Aquatic and Riparian Species That May Occur Within the Project Area			
Species	**Status**	**Use of Aquatic Habitat**	**Occurrence in Project Area**
Huachuca Water-umbel *Lilaeopsis schaffneriana* var. *recurva*	E (CH), HS, PVS	Shallow water or saturated soils at springs, seeps or edges of streams.	AZ
Status Definitions: E: Listed Endangered (ESA) CH: Critical Habitat (ESA) C: Candidate for listing (ESA) DM: ESA delisted species, undergoing monitoring PE: Petitioned to list as Endangered SC: USFWS Species of Concern BGEPA: Bald and Golden Eagle Protection Act NME: State of New Mexico Endangered Species		NMT: State of New Mexico Threatened Species NMS: State of New Mexico Sensitive Species NMSC: State of New Mexico Species of Concern WSC: AZGFD Wildlife Species of Concern FS: U.S. Forest Service Sensitive Species BLMS: BLM Sensitive Species SGCN: Species of Greatest Conservation Need BCC: Bird Species of Conservation Concern PVS: Pima County Priority Vulnerable Species.	

4.5.2.2 Concerns

Transmission line siting typically avoids direct impacts to aquatic habitat for logistical, engineering, safety, and environmental concerns. However, some impacts may occur at river and stream crossings, primarily related to vegetation management and ground disturbance that may generate sediments that can affect water quality. These impacts may directly affect some species and their habitat, or indirectly affect others by altering their prey base.

Vegetation management practices are driven by the need to prevent vegetation from causing a safety hazard through direct contact with conductors, by reaching close enough to create a flashover risk, or by supporting an intense fire that may damage structures or allow a flashover through smoke. Mature riparian trees such as cottonwoods may reach heights greater than 100 feet, and would create a direct hazard to conductors. In some cases, terrain surrounding narrow floodplains may allow structures to be placed on elevated sites, minimizing or avoiding impacts to riparian vegetation.

Ground disturbance increases the susceptibility of soils to wind and water erosion. Water erosion in particular has the potential to increase suspended sediment loads in streams, and can directly or indirectly affect aquatic species. Introduction of sediment into streams may clog or abrade fish gills, and can alter food webs by decreasing production of algae and reducing invertebrate populations. Severe sedimentation, such as may occur following fires or heavy flooding, can alter stream substrate, filling in gravel or cobble stream beds, and may even fill entire pools and result in the loss of that habitat. Any spilled hazardous materials would present a risk to aquatic species if allowed to reach a stream system.

4.5.2.3 Mitigation

<u>Design and Engineering</u>

- In construction areas where grading is not required, vegetation would be left in place wherever possible, and original contour would be maintained to avoid excessive root

damage and allow for regrowth. All existing roads would be left in a condition equal to or better than their condition prior to the construction of the transmission lines, as determined by the appropriate land-managing agency.

- To limit new disturbance, existing access roads in the Project area would be used to the extent practicable, provided that doing so does not additionally impact resource values.
- To the extent practicable, structures would be sited with a minimum distance of 200 feet from streams.
- No widening or upgrading of existing access roads would be undertaken in the area of construction and operations, except for repairs necessary to make roads passable, where soils and vegetation are very sensitive to disturbance, or where existing archaeological sites are present.
- There would be no blading of new access roads in select areas of construction and operations. Existing crossings would be utilized at perennial streams, designated recreational trails, and irrigation channels. Off-road or cross-country access routes would be used for construction and maintenance in select areas. This would minimize ground disturbance impacts. These access routes must be flagged with an easily seen marker, and the route must be approved in advance of use by the BLM Authorized Officer or landowner.
- In designated areas, structures would be placed so as to avoid, and/or to allow conductors to span sensitive features such as riparian areas, water courses, roads, trails, bat roosts, and cultural sites within limits of standard tower design. This would minimize the amount of sensitive features disturbed and/or reduce visual contrast.

Construction

- In construction areas where grading is not required, vegetation would be left in place wherever possible, and original contour would be maintained to avoid excessive root damage and allow for regrowth. All existing roads would be left in a condition equal to or better than their condition prior to the construction of the transmission lines, as determined by the appropriate land-managing agency.
- To limit new disturbance, existing access roads in the Project area would be used to the extent practicable, provided that doing so does not additionally impact resource values.
- Roads would be built as near as possible at right angles to the streams and washes. Culverts or temporary bridges would be installed where necessary. All construction and operations activities shall be conducted in a manner that would minimize disturbance to vegetation, drainage channels, and intermittent or perennial stream banks.
- No widening or upgrading of existing access roads would be undertaken in the area of construction and operations, except for repairs necessary to make roads passable, where soils and vegetation are very sensitive to disturbance, or where existing archaeological sites are present.
- There would be no blading of new access roads in select areas of construction and operations. Existing crossings would be utilized at perennial streams, designated

recreational trails, and irrigation channels. Off-road or cross-country access routes would be used for construction and maintenance in select areas. This would minimize ground disturbance impacts. These access routes must be flagged with an easily seen marker, and the route must be approved in advance of use by the BLM Authorized Officer or landowner.

- To minimize disturbance to riparian vegetation and woodlands, and to reduce visual contrast, clearing of trees in and adjacent to the right-of-way would be minimized to the extent practicable to satisfy conductor-clearance requirements (NESC and up to 10 years of timber growth). Trees and other vegetation would be removed selectively (e.g., edge feathering) to blend the edge of the right-of-way into adjacent vegetation patterns, as practicable and appropriate.

Operation and Maintenance

- To limit new disturbance, existing access roads in the Project area would be used to the extent practicable, provided that doing so does not additionally impact resource values.
- Roads would be built as near as possible at right angles to the streams and washes. Culverts or temporary bridges would be installed where necessary. All construction and operations activities shall be conducted in a manner that would minimize disturbance to vegetation, drainage channels, and intermittent or perennial stream banks.
- No widening or upgrading of existing access roads would be undertaken in the area of construction and operations, except for repairs necessary to make roads passable, where soils and vegetation are very sensitive to disturbance, or where existing archaeological sites are present.

Figure B1-3. Locations of Aquatic areas (To Be Determined)

4.6 OTHER SENSITIVE SPECIES

4.6.1 Wildlife

4.6.1.1 Background

In addition to the key biological resource concerns previously described, additional special-status wildlife and plant species that potentially could occur within the Project area will continue to be identified (Figure B1-4) and will be listed in Table B1-4, (Attachment B2), of this BPP. This section will be developed further regarding the selected route or as additional information becomes available regarding specific needs for mitigation.

4.6.1.2 Concerns

Given the wide range of species and habitats that could be affected by the proposed Project, any of the 14 types of impacts described in Section 3.2 could occur.

4.6.1.3 Mitigation

Standard mitigation measures, as well as selective mitigation measures identified previously in this document for other species, would assist in reducing impacts to many special-status species. As a route is selected and more information on species that may be affected becomes available, additional locations where selective mitigation measures may be appropriate may be identified. Additional selective mitigation measures may be developed at any point during development of the proposed Project, if impacts cannot be sufficiently mitigated with existing measures.

Figure B1-4. Other sensitive species locations (Source: AZGFD, NMGFD Heritage Programs)

4.6.2 Rare Plants

4.6.2.1 Background

As a part of preconstruction studies and surveys, a refined list of potential rare plant species that could occur in the Project rights-of-way will be developed through surveys of suitable habitat, and geographical information regarding rare plant species in New Mexico and Arizona (Figure B1-5). The goal of field surveys will be to identify and map the locations of special-status plants within the Project area and to incorporate survey results into Project design. Special-status plants that may occur within the Project area are summarized in Table B1-3, and will be shown on Figure B1-5.

Table B1-3. DRAFT Rare Plants with a Likelihood of Occurrence within the Project Study Area

Species	Status	Distribution and Habitat	Occurrence in Project Area
Acuña cactus *Echinomastus erectocentrus* var. *acunensis*	C, BLMS (AZ), HS, PVS	North of the Tortolita Mountains in Pinal County.	AZ
Broadleaf Groundcherry *Physalis latiphysa*	FS	Washes in desertscrub or semidesert grassland.	AZ
Chihuahua Scurf-pea *Pediomelum pentaphyllum*	NME, BLMS (NM), FS, SC	Chihuahuan desertscrub and grasslands. Distribution unclear.	NM, AZ
Fugate's Blue-star *Amsonia fugatei*	BLMS (NM), SC, NMSC	Ridges in Chihuahuan desertscrub in Socorro County.	NM
Griffith's Saltbush *Atriplex griffithsii*	BLMS (NM), SC, NMSC	Saline soils at playa margins.	NM, AZ
Huachuca Water Umbel *Lilaeopsis schaffneriana* var. *recurva*	E, HS, PVS,	Permanent streams and wetlands.	AZ
Needle-spined Pineapple Cactus *Echinomastus erectocentrus* var. *erectocentrus*	SC, PVS	Limestone soils in desertscrub and semidesert grassland.	AZ
Night-blooming Cereus *Peniocereus greggii* var. *greggii*	NME, BLMS (NM), SC	Sonoran and Chihuahuan desertscrub.	NM, AZ
Pima Pineapple Cactus *Coryphantha scheeri* var. *robustispina*	E, HS, PVS	Level ground and flat hilltops in Sonoran desertscrub.	AZ
Saguaro (crested individuals) *Carnegiea gigantea*	HS	Throughout Sonoran desertscrub. Crested individuals rare.	AZ
San Carlos Wild Buckwheat *Eriogonum capillare*	BLMS (NM), SC	Gravelly or loose soils with little competition from other plants.	NM, AZ
Sand Prickly-pear *Opuntia arenaria*	NME, SC	Sandy soils, not confirmed from Project area.	NM
Todsen's Pennyroyal *Hedeoma todsenii*	E, NME, BLMS (NM)	Rocky hillsides, not confirmed from Project area.	NM
Wright's Globemallow *Sphaeralcea wrightii*	SC, NMSC	Chihuahuan desertscrub and grasslands. Distribution unclear.	NM, AZ

Table B1-3. DRAFT Rare Plants with a Likelihood of Occurrence within the Project Study Area			
Species	**Status**	**Distribution and Habitat**	**Occurrence in Project Area**
Status Definitions: E: Listed Endangered C: Candidate for listing SC: Species of Concern NME: State of New Mexico Endangered Species	NMSC: New Mexico Species of Concern FS: Forest Service Sensitive Species BLMS: BLM Sensitive Species HS: Highly Safeguarded PVS: Pima County Priority Vulnerable Species.		

4.6.2.2 Concerns

Rare plants may be affected directly by ground disturbance that can remove individual plants, or result in temporary or permanent loss of suitable habitat. Plants in arid and semiarid vegetation communities are often slow-growing, and recovery of an entire plant community following disturbance may take decades or centuries. Ground disturbance may also remove part or the entire existing seed bank, further delaying recovery. Disturbed areas may be susceptible to colonization by invasive plants, which may outcompete rare plants or alter the fire regime.

4.6.2.3 Mitigation

The following mitigation measures may be used where appropriate to reduce impacts to rare plants, with an emphasis on avoiding individual plants if any suitable habitat is to be affected.

Design and Engineering

- In construction areas where grading is not required, vegetation would be left in place wherever possible, and original contour would be maintained to avoid excessive root damage and allow for regrowth. All existing roads would be left in a condition equal to or better than their condition prior to the construction of the transmission lines, as determined by the appropriate land-managing agency.
- To limit new disturbance, existing access roads in the Project area would be used to the extent practicable, provided that doing so does not additionally impact resource values.
- Preconstruction surveys for species listed under the ESA or specified by the appropriate land management agency as sensitive or of concern would be conducted in areas of known occurrence or suitable habitat. Timing of the surveys would be determined by the construction schedule. Monitoring of construction activities would be required in some areas to ensure that effects to these species are avoided during construction.
- Preconstruction native plant inventories and surveys for noxious weed species as stipulated by the appropriate land-administering agency would also be conducted once transmission line centerline, access roads, and tower sites have been located.
- In designated areas, structures would be placed so as to avoid, and/or to allow conductors to span sensitive features such as riparian areas, water courses, roads, trails, bat roosts, and cultural sites within limits of standard tower design. This would minimize the amount of sensitive features disturbed and/or reduce visual contrast.

Construction

- All vehicle movement outside the right-of-way would typically be restricted to designated access, contractor acquired access, or public roads.
- The boundary of construction activities would typically be predetermined, with activity restricted to and confined within those limits. No paint or permanent discoloring agents would be applied to rocks or vegetation to indicate survey or construction activity limits.
- In construction areas where grading is not required, vegetation would be left in place wherever possible, and original contour would be maintained to avoid excessive root damage and allow for regrowth. All existing roads would be left in a condition equal to or better than their condition prior to the construction of the transmission lines, as determined by the appropriate land-managing agency.
- To limit new disturbance, existing access roads in the Project area would be used to the extent practicable, provided that doing so does not additionally impact resource values.
- Preconstruction surveys for species listed under the ESA or specified by the appropriate land management agency as sensitive or of concern would be conducted in areas of known occurrence or suitable habitat. Timing of the surveys would be determined by the construction schedule. Monitoring of construction activities would be required in some areas to ensure that effects to these species are avoided during construction.

Operations and Maintenance

- All vehicle movement outside the right-of-way would typically be restricted to designated access, contractor acquired access, or public roads.
- To limit new disturbance, existing access roads in the Project area would be used to the extent practicable, provided that doing so does not additionally impact resource values.
- Preconstruction surveys for species listed under the ESA or specified by the appropriate land management agency as sensitive or of concern would be conducted in areas of known occurrence or suitable habitat. Timing of the surveys would be determined by the construction schedule. Monitoring of construction activities would be required in some areas to ensure that effects to these species are avoided during construction.

Figure B1-5. Rare Plant Locations (To Be Determined)

5 REFERENCES CITED

Arizona Game and Fish Department (AZGFD). 2010. Habitat enhancement and wildlife management proposal for the Bonita Grasslands Restoration Project. Project No. 10-504. Phoenix, Arizona.

_____. 2007. Guidelines for Handling Sonoran Desert Tortoises Encountered on Development Projects. Revised October 23, 2007.

Arizona Interagency Desert Tortoise Team. 2008. Recommended Standard Mitigation Measures for Projects in Sonoran Desert Tortoise Habitat, 7 p.

Avian Power Line Interaction Committee (APLIC). 2006. Suggested Practices for Avian Protection on Power Lines: The State of the Art in 2006. Edison Electric Institute, APLIC, and the California Energy Commission. Washington, DC and Sacramento, CA. 207 pp.

Bondello, M.C., and B.H. Brattstrom. 1979. The experimental effects of off-road vehicle sounds on three species of desert vertebrates. Final Report to the BLM (Contract CA-060-CT7-2737). 134 pp.

Brooks, M.L. 2008. Plant invasions and fire regimes. In Zouhar, K., J.K. Smith, S. Sutherland, and M.L. Brooks. Wildland fire in ecosystems: fire and nonnative invasive plants. General Technical Report RMRS-GTR-42 (6). U.S. Forest Service Rocky Mountain Research Station. Ogden, Utah. 355 pp.

Brumm, H. 2004. The impact of environmental noise on song amplitude in a territorial bird. Journal of Animal Ecology 73: 434-440.

Bureau of Land Management (BLM). 2009. Desert Tortoise Mitigation Policy. Instruction Memorandum No. AZ-2009-010. 16 p. + attachments.

Erickson, W.P., G.D. Johnson, and D.P. Young. 2005. A summary and comparison of bird mortality from anthropogenic causes with an emphasis on collisions. USDA Forest Service, Pacific Southwest Research Station. General Technical Report PSW-GTR-191: 1029-1042.

Francis, C.D., N.J. Kleist, C.P. Ortega, and A. Cruz. Noise pollution alters ecological services: enhanced pollination and disrupted seed dispersal. Proceedings of the Royal Society of Biological Sciences. Available online at: http://rspb.royalsocietypublishing.org/content/early/2012/03/15/rspb.2012.0230.full.pdf+html. Accessed May 21, 2012.

Jenny, J.P., W. Heinrich, A.B. Montoya, B. Mutch, C Sandfort, and W.G. Hunt. 2004. From the field: progress in restoring the Aplomado Falcon to southern Texas. Wildlife Society Bulletin 32 (1): 276-285.

Manville, A.M. II. 2005. Bird strikes and electrocutions at power lines, communication towers, and wind turbines: state of the art and state of the science – next steps towards mitigation. U.S. Forest Service Gen. Tech. Rep. PSW-GTR-191. 14 pp.

Theobald, D.M., J.R. Miller, and N.T. Hobbs. 1997. Estimating the cumulative effects of development on wildlife habitat. Landscape and Urban Planning 39: 25-36.

United States Department of the Interior. 1995. DOI Manual – Part 609: Weed Control Program. Available at http://elips.doi.gov/elips/release/3042.htm. Accessed January 27, 2011.

United States Fish and Wildlife Service (USFWS). 2011. Sevilleta National Wildlife Refuge. Available at www.fws.gov/southwest/REFUGES/newmex/sevilleta/index.html. Accessed January 28, 2011.

_____. 2010. 12-month finding on a petition to list Sprague's Pipit as Endangered or Threatened throughout its range. FR 75 (178): 56028-56050.

_____. 2006. Final Environmental Assessment for the reestablishment of the Northern Aplomado Falcon in New Mexico and Arizona. USFWS New Mexico Ecological Field Services Office. Albuquerque, New Mexico. 49 pp.

(*Note: as further information becomes available, and as engineering is completed for a selected route, this table will provide information on special-status species not listed under the ESA, state laws, or as BLM sensitive species. This information will be used to support the application of existing mitigation measures and the development of additional measures as needed, as described in Section 4.6.*)

Table B1-4. Special-status Animal and Plant Species Known or Expected to Occur within the Project Area

Species	Status	Habitat	Distribution
To Be Determined			

Appendix B2 – Noxious Weed Management Plan

TABLE OF CONTENTS

1. Introduction B2-1
   1.1. Background B2-1
   1.2. Plan Purpose B2-1
   1.3. Goals and Objectives B2-1
   1.4. Project Description B2-2
2. Noxious Weed Inventory B2-2
   2.1. State-Listed Noxious Weeds B2-2
   2.2. Inventory of Noxious Weeds within the Project Area B2-6
   2.3. Weed Infestation Areas B2-6
3. Noxious Weed Management B2-7
   3.1. Identification of Problem Areas and Education B2-7
   3.2. Preventive Measures B2-8
   3.3. Control Measures B2-9
   3.4. Agency-Specific Requirements B2-11
4. Monitoring B2-12
   4.1. Reclamation Monitoring B2-12
   4.2. Ongoing Monitoring B2-13
5. Pesticide Application, Handling, Spills, and Cleanup B2-13
   5.1. Pesticide Application and Handling B2-13
   5.2. Pesticide Spills and Cleanup B2-14
   5.3. Worker Safety and Spill Reporting B2-15
6. Literature Cited B2-15
Attachment B2-1: Noxious/Invasive Weeds Risk Assessment Form and Definition of Risk Factors ..... Attachment B21-1
Attachment B2-2: BLM-Approved Herbicides ..... Attachment B22-1
Attachment B2-3: Herbicide Treatment Standard Operating Procedures ..... Attachment B23-1

LIST OF TABLES

Table B2-1. Noxious Weed Species of Potential Concern – State of New Mexico B2-3
Table B2-2. Noxious Weed Species of Potential Concern- State of Arizona B2-4

This page intentionally left blank

1. INTRODUCTION

1.1. Background

The Bureau of Land Management (BLM) defines noxious weeds as “a plant that interferes with management objectives for a given area of land at a given point in time.” The New Mexico Noxious Weed Act defines noxious weeds as “any weed or plant which the board of county commissioners acting as the governing body of the district, and with the advice of the county agent, declares to be harmful or to possess noxious characteristics”. The Arizona Department of Agriculture defines a noxious weed as "any species of plant that is, or is liable to be, detrimental or destructive and difficult to control or eradicate and shall include any species that the director [Department of Agriculture], after investigation and hearing, shall determine to be a noxious weed”. Noxious weeds are often opportunistic plant species that readily colonize and may flourish in disturbed areas. Noxious weeds typically compete effectively with native plants for resources and may permanently change the plant community, often becoming monocultures that may alter the local fire regime by increasing the fine fuel load. Such changes usually preclude re-establishment of the native plant community in disturbed areas, and represent a long-term or permanent change in the local ecology.

The format and content of this Noxious Weed Management Plan was based on the principles and procedures outlined in the BLM Integrated Weed Management Manual 9015. This Plan includes a discussion on (1) the plan purpose and objectives, (2) the noxious weed inventory, (3) management practices, (4) monitoring, and (5) the use of pesticides/herbicides. Use of pesticides or herbicides on BLM-managed lands requires compliance with the BLM Vegetation Treatment PEIS and the FWS Biological Opinion.

1.2. Plan Purpose

The Arizona Department of Agriculture and New Mexico Department of Agriculture have identified noxious weeds that occur within the states of Arizona and New Mexico, respectively. Some of these noxious weeds have the potential to occur within the Project right-of-way. This Noxious Weed Management Plan provides methods to control the potential occurrence/infestation of noxious weeds during and following construction of the Project. It is the responsibility of the Proponent and/or the construction contractor(s), working with the Compliance Inspection Contractor (CIC) and BLM Authorized Officer, to ensure noxious weeds are identified and controlled during the construction of project facilities and that all federal, state, county, and other local requirements are satisfied with respect to noxious weeds. The control of invasive species (not classified as noxious weeds) is addressed in Appendix F – Reclamation, Revegetation, and Monitoring Framework Plan.

1.3. Goals and Objectives

The goal of this Noxious Weed Management Plan is to implement early detection, containment, and control of noxious weeds during and following Project construction. Information gathered during pre-construction surveys and provided by the BLM will be used to monitor and control the spread of noxious weeds that may pose a potential infestation threat during the construction

and operation of the transmission line in areas on or adjacent to the Project. These preventive and treatment measures are described in Section 3 of this plan below. An evaluation of the effectiveness of the prescribed control measures (Section 4 of this plan) will be implemented during the operational phase of the transmission line.

1.4. Project Description

The proposed Project would include two new, single-circuit 500 kV transmission lines located adjacent to one another within separate rights-of-way. The approximately 500-mile-long transmission line route would originate at a new substation (referred to as "SunZia East") in Lincoln County, New Mexico, and terminate at the Pinal Central Substation in Pinal County, Arizona. The Project may be located within Lincoln, Socorro, Sierra, Luna, Grant, Hidalgo, Dona Ana, and/or Otero counties in New Mexico, and Graham, Greenlee Cochise, Pinal and/or Pima counties in Arizona. A detailed Project description may be found in Chapter 2 of the Draft EIS.

2. NOXIOUS WEED INVENTORY

As a part of the environmental requirements for the Project, a noxious weed inventory for the Project will be conducted and include (1) the identification of weed species designated noxious by the States of New Mexico (NMDA 2009) and Arizona (ADA 2011), and having the potential to occur within the area affected by the Project, and (2) the gathering of information to identify specific noxious weed populations in the Project area, including pre-construction surveys along the Project right-of-way.

2.1. State-Listed Noxious Weeds

The states of New Mexico and Arizona, as well as the U.S. Department of Agriculture, maintain an official list of weed species that are designated noxious for the two states. The State of New Mexico has officially designated 33 weed species as noxious (USDA 2011). Of these 33, 14 species have the potential of occurring in the Project area. These weed species are shown in Table B2-1. The Arizona Department of Agriculture has officially designated 77 weed species as noxious (ADA 2011). Of these 77, 28 have the potential of occurring in the Project area. These weed species are shown in Table B2-2. Both New Mexico and Arizona have unique categories (see below) for noxious weed species; however, all weeds in the tables below will be treated equally.

2.1.1. Categories for Noxious Weeds in New Mexico

Class A species are currently not present in New Mexico, or have limited distribution. Preventing new infestations of these species and eradicating existing infestations is the highest priority.

Class B species are limited to portions of the state. In areas with severe infestations, management should be designed to contain the infestation and stop any further spread.

Class C species are widespread in the state. Management decisions for these species should be determined at the local level, based on feasibility of control and level of infestation

Watch List species are species of concern in the state. These species have the potential to become problematic. More data are needed to determine if these species should be listed. When the species are encountered, the state requests location documentation and contact of appropriate authorities.

Table B2-1. Noxious Weed Species of Potential Concern – State of New Mexico

Scientific Name	Common Name	Status	Potential of Occurring in the Project Area
Acroptilon repens	Russian knapweed	Class B	X
Aegilops cylindrica	jointed goatgrass	Class C	X
Alhagi maurorum	camelthorn	Class A	X
Alhagi pseudalhagi	camelthorn	Class A	X
Asphodelus fistulosus	onionweed	Class A	
Cardaria draba	hoary cress	Class A	X
Carduus nutans	musk thistle	Class B	
Centaurea calcitrapa	purple starthistle	Class A	
Centaurea diffusa	diffuse knapweed	Class A	
Centaurea melitensis	Malta starthistle	Class B	X
Centaurea solstitialis	yellow starthistle	Class A	X
Centaurea maculosa	spotted knapweed	Class A	
Cirsium arvense	Canada thistle	Class A	X
Cirsium vulgare	bull thistle	Class B	X
Conium maculatum	poison hemlock	Class B	
Convolvulus arvensis	field bindweed	Class C	
Dipsacus fullonum	teasel	Class B	
Drymaria arenarioides	alfombrilla	Class A	
Elaeagnus angustifolia	Russian olive	Class C	X
Euphorbia esula	leafy spurge	Class A	
Halogeton glomeratus	halogeton	Class B	
Hydrilla verticillata	hydrilla	Class A	
Hyoscyamus niger	black henbane	Class A	
Isatis tinctoria	dyer's woad	Class A	
Lepidium latifolium	perennial pepperweed	Class A	X
Linaria dalmatica ssp. dalmatica	Dalmatian toadflax	Class A	
Linaria vulgaris	yellow toadflax	Class A	
Lythrum salicaria	purple loosestrife	Class A	X
Myriophyllum spicatum	Eurasian watermilfoil	Class A	
Onopordum acanthium	Scotch thistle	Class A	
Peganum harmala	African rue	Class B	X
Tamarix sp.	saltcedar	Class C	X
Ulmus pumila	Siberian elm	Class C	

Source: New Mexico Department of Agriculture: Noxious Weed List available at: http://nmdaweb.nmsu.edu/DIVISIONS/APR/weed.html, 20 October 2003

2.1.2. Categories for Noxious Weeds in Arizona

All categories of Arizona noxious weeds pertain to plants, stolons, rhizomes, cuttings, and seed.

Prohibited species are prohibited from entry into the state.

Regulated species, if found within the state, may be controlled or quarantined to prevent further infestation or contamination.

Restricted species, if found within the state, shall be quarantined to prevent further infestation or contamination.

Other: BLM noxious weed of concern. Control managed by the Arizona BLM.

Table B2-2. Noxious Weed Species of Potential Concern- State of Arizona

Scientific Name	Common Name	Known or has Potential of Occurring in the Project Area
PROHIBITED		
Acroptilon repens	Russian knapweed	X
Aegilops cylindrica	Jointed goatgrass	X
Alhagi pseudalhagi	Camelthorn	X
Alternanthera philoxeroides	Alligator weed	
Cardaria pubescens	Hairy whitetop	
Cardaria chalepensis	Lens-podded hoary cress	
Cardaria draba	Globed-podded hoary cress (Whitetop)	X
Carduus acanthoides	Plumeless thistle	
Cenchrus echinatus	Southern sandbur	X
Centaurea calcitrapa	Purple starthistle	
Centaurea iberica	Iberian starthistle	
Centaurea squarrosa	Squarrose knapweed	
Centaurea sulphurea	Sicilian starthistle	
Centaurea solstitialis	Yellow starthistle	X
Centaurea diffusa	Diffuse knapweed	
Centaurea maculosa	Spotted knapweed	
Chondrilla juncea	Rush skeletonweed	
Cirsium arvense	Field bindweed	X
Coronopus squamatus	Creeping wartcress (Coronopus)	
Cucumis melo L. var. *Dudaim Naudin*	Dudaim melon (Queen Anne's melon)	
Cuscuta spp.	Dodder	X
Drymaria arenarioides	Alfombrilla (Lightningweed)	
Eichhornia crassipes	Floating water hyacinth	
Eichhornia azurea	Anchored water hyacinth	

Table B2-2. Noxious Weed Species of Potential Concern- State of Arizona		
Scientific Name	**Common Name**	**Known or has Potential of Occurring in the Project Area**
Elytrigia repens	Quackgrass	
Euphorbia esula	Leafy spurge	
Halogeton glomeratus	Halogeton	
Helianthus ciliaris	Texas blueweed	X
Hydrilla verticillata	Hydrilla (Florida elodea)	
Ipomoea spp.	Morning glory. All species except *Ipomoea carnea*, Mexican bush morning glory	X
Ipomoea triloba	Three-lobed morning glory	
Isatis tinctoria	Dyer's woad	
Linaria genistifolia var. *dalmatica*	Dalmatian toadflax	
Lythrum salicaria	Purple loosestrife	X
Medicago polymorpha	Burclover	X
Nassella trichotoma	Burclover	
Onopordum acanthium	Branched broomrape	
Orobanche ramosa	Branched broomrape	
Panicum repens	Torpedo grass	
Peganum harmala	African rue (Syrian rue)	X
Pennisetum ciliare	buffelgrass	X
Portulaca oleracea	Common purslane	X
Rorippa austriaca	Austrian fieldcress	
Salvinia molesta	Giant salvina	
Senecio jacobaea	Tansy ragwort	
Solanum carolinense	Carolina horsenettle	
Sonchus arvensis	Perennial sowthistle	
Solanum viarum	Tropical Soda Apple	
Stipa brachychaeta	Puna grass	
Striga spp.	Witchweed	
Trapa natans	Water-chestnut	
Tribulus terrestris	Puncturevine	X
REGULATED		
Cenchrus echinatus	Southern sandbur	X
Cenchrus incertus	Field sandbur	
Convolvulus arvensis	Field bindweed	X
Eichhornia crassipes	Floating water hyacinth	
Medicago polymorpha	Burclover	X
Pennisetum ciliare	Buffelgrass	X
Portulaca oleracea	Common purslane	X

Table B2-2. Noxious Weed Species of Potential Concern- State of Arizona		
Scientific Name	**Common Name**	**Known or has Potential of Occurring in the Project Area**
Salvinia molesta	Giant Salvinia	
Tribulus terrestris	Puncturevine	X
RESTRICTED		
Acroptilon repens	Russian knapweed	X
Aegilops cylindrica	Jointed goatgrass	X
Alhagi pseudalhagi	Camelthorn	
Cardaria draba	Globe-podded hoary cress (Whitetop)	X
Centaurea diffusa	Diffuse knapweed	
Centaurea maculosa	Spotted knapweed	
Centaurea solstitialis	Yellow starthistle (St. Barnaby's thistle)	X
Cuscuta spp.	Dodder	X
Eichhornia crassipes	Floating water hyacinth	
Elytrigia repens	Quackgrass	
Euryops subcarnosus subsp. *vulgaris* –	Sweet resinbush	X
Halogeton glomeratus	Halogeton	
Halogeton glomeratus	Texas blueweed	
Ipomoea triloba	Three-lobed morning glory	
Linaria genistifolia var. *dalmatica*	Dalmatian toadflax	
Onopordum acanthium	Scotch thistle	
OTHER		
Asphodelus fistulosus	Onionweed	X
Sources: Arizona Department of Agriculture: Noxious Weed List; BLM Safford Field Office		

2.2. Inventory of Noxious Weeds within the Project Area

Pre-construction surveys will be conducted to identify existing noxious weed infestations along the SunZia transmission line corridor. The survey results will be presented in the pre-construction survey report to be prepared for this Project. In addition to this survey, information on noxious weed occurrences known to occur within or adjacent to the Project are, including the location and extent of infestations, will be provided by BLM District Offices in Arizona and New Mexico in the form of a geographical information system (GIS) data layer.

2.3. Weed Infestation Areas

This section will be developed as the Project progresses and a final route is selected. It will include a list of noxious weed infestations within the two, 200-foot SunZia rights-of-way that

will be identified from data provided by the BLM based on past studies, and/or through the pre-construction field surveys that will be included in eradication and containment programs.

3. NOXIOUS WEED MANAGEMENT

Regulatory agencies along the proposed transmission alignment, and specifically the BLM, have varying requirements for weed management. A risk assessment (see Attachment B2-1) will be performed based on the results of the inventory of noxious weeds, and using the principles and procedures outlined in the BLM Integrated Weed Management Manual 9015. Based upon the results of the assessment, a risk rating will be determined for the Project. The management of noxious weeds will be considered throughout all stages of the Project including:

- Educating all construction personnel regarding the identified problem areas and the importance of preventive measures and treatment methods.
- Specific preventive measures to prevent the spread of noxious weeds.
- Pre- and post-construction treatment methods to be applied to areas of noxious weed infestation.

Following is a description of the measures that may be required for noxious weed management as directed by the BLM or State Quarantine Officer. Applicable measures will be agreed upon prior to initiation of any ground disturbing activities, and this Noxious Weed Management Plan will be modified accordingly.

3.1. Identification of Problem Areas and Education

Prior to the initiation of construction activities, all construction personnel will be instructed on the importance of controlling noxious weeds. As part of the start-up activities, the construction contractor(s) will provide information and training regarding noxious weed management. The importance of preventing the spread of noxious weeds in areas not infested and controlling the proliferation of weeds already present will be emphasized. Prior to construction, areas of concern identified in the Weed Risk Assessment (including additional populations, if any), will be flagged by an Environmental Inspector and reviewed by the CIC. This flagging will alert construction personnel and prevent area access until noxious weed management control measures, as described below, have been implemented.

3.1.1. Personnel Requirements

Weed management actions shall be carried out by a weed management specialist with the following qualifications:

- Training and experience in native plant taxonomy/identification.
- Training and experience in field ecology and plant community mapping.
- Possession of a Commercial Applicator's License for pesticides from the State Department of Agriculture; New Mexico and/or Arizona as appropriate.
- Training in weed management or Integrated Pest Management with an emphasis in weeds.
- Experience in coordination with agency and private landowners.
- Recent attendance at a BLM-approved noxious weed training course.

3.1.1.1. Other Specific Stipulations and Methods

3.2. Preventive Measures

The following preventive measures will be implemented to prevent the spread of noxious weeds during the construction activities, as well as during restoration and reclamation efforts. Detailed information regarding reclamation, along with the control of invasive plant species is provided in Appendix F – Reclamation, Revegetation, and Monitoring Framework Plan.

These preventive measures are to be applied on a case-by-case basis, where applicable and necessary, at the recommendation of the Environmental Inspectors (weed specialists) as approved and/or required by the BLM and CIC.

- Prior to ground disturbing activities in pre-determined areas, a qualified weed specialist will survey the proposed disturbance area and map existing populations of noxious, invasive weeds. The pre-construction surveys will establish a baseline for construction and post-construction noxious weed management procedures.

- Where feasible, construction will begin in weed-free areas before operating in weed-infested areas. The feasibility of this measure will be determined after survey data is complete to identify weed-free and weed-infested areas.

- All movement of construction vehicles outside of the right-of-way will be restricted to pre-designated access, contractor-acquired access, or public roads. All construction sites and access roads will be clearly marked or flagged at the outer limits prior to the onset of any surface-disturbing activity. All personnel shall be informed their activities must be confined within the marked or flagged areas.

- Prior to arrival at the work site, all Contractor vehicles and equipment will be cleaned of all soil and plant material using high-pressure equipment. Only compressed air will be used at wash stations on BLM administered lands; however, compressed air or water may be used at wash stations on non-BLM administered lands. All wash station locations will be approved by the BLM or appropriate land owner. The cleaning activities will concentrate on tracks, feet, or tires and the undercarriage with special emphasis on axles, frame, cross members, motor mounts, underneath steps, running boards, and front bumper/brush guard assemblies. Vehicle cabs will be swept out and refuse will be disposed of in waste receptacles. The location of vehicle cleaning stations will be identified by the construction contractor(s), and reviewed by the BLM Authorized Officer for approval. Also, when moving from weed infested areas to other areas along the transmission line right-of-way, all construction vehicles and equipment will be cleaned using compressed air before proceeding to new locations.

- Construction personnel will inspect, remove, and dispose of weed seed and plant parts found on their clothing and equipment. All removed weed seed and plant parts will be immediately placed into sealable bags and/or containers to prevent weed seed or plant part dispersal during disposal and/or temporary storage.

- The construction contractor(s), with oversight by the Environmental Inspectors and/or CIC, will ensure that vehicles and equipment are free of soil and debris capable of transporting noxious weed seeds, roots, or rhizomes before the vehicles and equipment are allowed use of access roads on the right-of-way.

- In areas of temporary disturbance where infestations are identified or noted, pre-disturbance treatment of noxious weeds will be implemented. In some cases (i.e. isolated noxious weed locations), as directed by the BLM, topsoil infested with noxious weed material will be removed from the site for disposal. Where it is not feasible to remove topsoil (i.e. large, contiguous infestation sites), the movement of stockpiled vegetation and salvaged topsoil will be limited to minimize the transport of soil-borne noxious weed seeds, roots, or rhizomes, and marked as containing noxious weed seed materials to avoid mixing with weed-free soil.

- Where necessary, during reclamation, the Contractor will bring weed-free topsoil to locations where infested topsoil has been removed from the site. In areas where infested topsoil has not been removed from the site, the Contractor will return the topsoil and vegetative material back to their original locations and, as directed by the BLM, may provide additional treatments (i.e. pre-emergent herbicides) to prevent return of noxious weeds. The Contractor will use compressed air to remove seeds, roots, and rhizomes from the equipment before transport off-site. Cleaning sites will be recorded using global positioning system (GPS) equipment, and this information will be reported to the BLM.

- The Contractor will ensure straw or hay bales, used for sediment barrier installations or mulch application, are obtained from state-approved sources that are certified free of noxious weeds.

- Immediately following construction, the Contractor will implement the reclamation of disturbed land as required. Continuing revegetation efforts will ensure adequate vegetative cover, minimizing the potential for noxious weed colonization.

3.3. Control Measures

The construction contractor(s) will implement noxious weed control measures in accordance with existing regulations and BLM requirements. Control measures will be based on species-specific and site-specific conditions (e.g., proximity to water or riparian areas, agricultural areas, season) and will be coordinated with the BLM Authorized Officer. If existing populations are currently under treatment by the BLM or other individuals, the Proponent is encouraged to engage in cooperative management efforts to treat the noxious weeds associated with the Project area. In the event noxious weed infestations are identified in the future, the following protocols and methods will be followed. The Environmental Inspector (weed specialist) contracted by the Proponent shall provide a detailed control methodology for each noxious weed species documented. The BLM Authorized Officer will review and approve this Noxious Weed Management Plan prior to implementation. Control measures may include one or more of the following methods prior to implementation of reclamation actions.

3.3.1. Mechanical

Mechanical methods rely on equipment that can be used to mow or disc weed populations. This type of methodology is useful for smaller, isolated populations or if larger populations occur in agricultural lands where tillage can be implemented. Appropriate mechanical methodology will vary by species. For example, discing or tilling may actually benefit some rhizomatous weeds and would therefore be inappropriate for such species. If discing or tilling are used in areas to be reclaimed, subsequent seeding will be conducted to re-establish a desirable vegetative cover that will stabilize the soils and slow the potential re-invasion of noxious weeds.

Discing or other mechanical treatments that would disturb the soil surface within native habitats will be avoided in favor of herbicide application, which is an effective means of reducing the size of noxious weed populations, as well as preventing the establishment of new colonies.

3.3.2. Cultural

Implement preventive measures, such as quarantine and closure, to reduce and contain existing infestations. Flagging will alert personnel and prevent access into areas where noxious weeds occur. Construction disturbance will be minimized in these areas until control measures have been implemented (with the exception of reclamation treatments, as applicable).

Reclamation treatments, such as seeding, will be based on site-specific conditions and the appropriate seed mix identified for those conditions. Seeding will help to reduce the spread of noxious weeds by re-vegetating exposed soils. If areas are not seeded until the following spring, because of weather or scheduling constraints, all undesirable vegetation will be eradicated before seeding.

3.3.3. Biological

Biological control involves using living organisms (insects, diseases, livestock) to control noxious weeds to achieve management objectives. Many noxious weed species have been recently introduced into North America and have few natural enemies to control their population. The biological control agent is typically adapted to a specific species and selected for their ability to attack critical areas of the plant that contribute to its persistence. This method of control may be implemented for large weed infestations where biological control is currently being used, and if requested by the BLM noxious weed coordinator.

3.3.4. Chemical

Chemical control can effectively remove noxious weeds through use of selective herbicides. Pesticide treatment can be temporarily effective for large infestations of noxious weeds where other means of control may not be feasible. The BLM noxious weed coordinator will determine during the monitoring and evaluation period if continued treatment is necessary. Only pesticides approved by the BLM will be applied to the identified weed infestations on BLM land to reduce the spread or proliferation of weeds. Pesticide applications will be controlled, as described in Section 5, to minimize the impacts on the surrounding vegetation. In areas of dense infestation, a broader application will be used and a follow-up seeding program will be implemented.

3.3.5. Reclamation Actions

As specified in Appendix F – Reclamation, Revegetation, and Monitoring Framework Plan, areas where weed control measures have been implemented and require post-construction reclamation actions (i.e., seeding) the following specific stipulations and methods are applicable:

- If areas are not immediately seeded after construction, because of weather or scheduling constraints, all undesirable vegetation will be eradicated before seeding, preferably in the spring.
- If discing or tilling is an appropriate and feasible treatment method, it will only be permitted in bladed areas.
- Seed selection will be based on site-specific conditions, including desired vegetation and the type or degree of disturbance, and the appropriate seed mix will be identified for those conditions based on the presence and treatment of noxious weeds in the Project area. The CIC or weed specialist may recommend modified seeding application rates and timing of implementation to achieve site-specific weed management objectives.
- Additional weed and/or erosion control measures recommended during monitoring will follow the preventive and control measures outline in this Plan. Continued cooperation with the current BLM noxious weed coordinator and local Weed Management Area groups is also encouraged.

3.4. Agency-Specific Requirements

The New Mexico and Arizona Departments of Agriculture regulate noxious weeds under the Noxious Weed Management Act (76-7-23 to 76-7-30 NMSA 1978) and Title 3, Chapter 4 of the Arizona Administrative Code, respectively. Each state's noxious weed legislation provides direction within the respective Departments of Agriculture for management of noxious weeds on public and private lands and designation of noxious weed quarantines. Through the implementation of this Weed Management Plan and in conjunction with the BLM (as described below), the Project will be in compliance with the New Mexico and Arizona noxious weed laws. The following is a discussion regarding BLM stipulations, and personnel and equipment requirements.

3.4.1. Bureau of Land Management Land

The Final Programmatic Environmental Impact Statement (PEIS) on Vegetation Treatment on BLM Land in Seventeen Western States lists herbicides acceptable (see Attachment B2-2: – BLM-Approved Herbicides) for use on BLM lands (BLM 2007). Additional tiers of NEPA analysis may be required for local, site-specific decisions regarding herbicide application. Any herbicides to be used on the Project will be reviewed for approval by the BLM prior to initiation of construction. Guidelines for use of chemical control of vegetation on BLM lands are presented in the Chemical Pest Control Manual. These guidelines require submittal of a Pesticide Use Proposal, which will be prepared by the Contractor and submitted to the BLM for review and

approval prior to initiation of construction activities. Once approved, any use of other pesticides will require Pesticide Application Records (PARs) that detail the use and application.

The occurrence of noxious weeds within the Project will be reported to the BLM district (field) office, within whose jurisdiction the weeds occur. The appropriate weed control procedures, including target species, timing of control, and method of control, will be determined in consultation with the BLM by the Contractor, based on the procedures outlined in this Noxious Weed Plan. The Proponent may be able to take advantage of any existing cooperative agreements between the BLM and the counties by providing the funds required for county personnel to implement the necessary weed control procedures. If not, the Proponent will be responsible for providing the necessary personnel or hiring a Contractor to implement the weed control procedures with the qualifications as described in Section 3.1.1 of this Plan.

4. MONITORING

A weed management specialist, contracted by the Proponent, will monitor the Project and any other areas of disturbance associated with the Project, for a period not to exceed five years. Monitoring will be conducted biannually, typically during the spring and fall, but time of monitoring may be adjusted to ensure appropriate coverage for specific species identified on the Project. This monitoring may coincide with the reclamation monitoring identified and outlined in Appendix F – Reclamation, Revegetation, and Monitoring Framework Plan. Growing seasons will vary from year-to-year; therefore, the length of monitoring will vary as well.

4.1. Reclamation Monitoring

During Reclamation Monitoring, the Proponent, or representative contractor for the Proponent, will initiate monitoring of previously identified affected/disturbed areas during the first spring following construction and proceed with monitoring during subsequent intervals.

Noxious weed monitoring will occur biannually for up to five years following completion of each segment of the Project. In addition, noxious weed conditions will be included in the evaluations of revegetation success as described in Appendix B14 – Reclamation, Revegetation, and Monitoring Framework Plan. The Proponent will document its observations following the above noted field inspections and make these monitoring reports available to the BLM and counties, as required.

Areas where the spread of a noxious weed infestation is noted, particularly in previously unaffected locations, will be further evaluated to determine if these areas require remedial action and additional treatment. The Proponent will identify such areas to the agencies by state, county, and Project milepost (or nearest transmission structure number) and will record any additional noxious weed control treatments. A report summarizing right-of-way stability, revegetation progress, percent of cover, and weed infestation will be provided to the BLM as described in Appendix F – Reclamation, Revegetation, and Monitoring Framework Plan.

4.2. Ongoing Monitoring

The Project Proponent will consult with the BLM and counties should they have a concern pertaining to noxious weeds within their jurisdiction. The BLM also may contact the Proponent to report on the presence of noxious weeds. The Proponent will be required to monitor and control noxious weeds at a level that does not exceed the density or extent of their conditions identified during preconstruction surveys (see Section 2 of this Plan) for the full term of the right-of-way grant, and will eradicate any new infestation that is demonstrated to be the result of Project construction, operation, or maintenance. The Proponent will not be responsible for the following

- Eradication of pre-existing noxious weed infestations,
- New or recurring noxious weed infestations caused by the spread of noxious weeds from surrounding and/or adjacent lands unless it can be demonstrably shown to be the result of disturbance caused by the construction, operation, or maintenance of the Project,
- Noxious weeds outside the Project right-of-way or noxious weeds along existing access roads not improved by the Project.

Operations personnel will be trained in the identification of predominant noxious weed populations, and the Proponent will control the weeds on a case-by-case basis. If determined necessary, a report on actions taken will be provided in the form of Monitoring Reports to the BLM on a predetermined schedule.

5. PESTICIDE APPLICATION, HANDLING, SPILLS, AND CLEANUP

5.1. Pesticide Application and Handling

The list of pesticides to be used will be reviewed and approved by the BLM, and pesticide application will be based on information gathered from the Weed Districts and BLM. The project-approved pesticides are listed in Attachment B2-2 – BLM-Approved Herbicides. Before application, all required permits from the local authorities will be obtained (the Weed Districts and BLM). Permits may contain additional terms and conditions that go beyond the scope of this management plan.

A licensed pesticide applicator, approved in the state of New Mexico or Arizona (as applicable), will perform the application using BLM selected and approved pesticides in accordance with applicable laws, regulations, and permit stipulations. All pesticide applications must follow United States Environmental Protection Agency (EPA) label instructions. Application of pesticides will be suspended when any of the following conditions exist:

- Wind velocity exceeds 6 mph during application of liquids
- Wind velocity exceeds 10 mph during application of granular pesticides
- Snow or ice covers the foliage of noxious weeds
- Precipitation is occurring or is imminent

Vehicle-mounted sprayers (e.g., handgun, boom, and injector) may be used in open areas that are readily accessible by vehicle. Hand application methods (e.g., backpack spraying) that target

individual plants will be used to treat small or scattered weed populations in rough terrain. Calibration checks of equipment will be conducted at the beginning and periodically during spraying to ensure proper application rates are achieved.

Pesticides will be transported to the Project site daily with the following provisions:

- Only the quantity needed for that day's work will be transported.
- Pesticides will be transported only in approved containers, in a manner that will prevent tipping or spilling, and in a location isolated from the vehicle's driving compartment, food, clothing, and safety equipment.
- Mixing will be done off-site, over a drip catching device, and at a distance greater than 200 feet from open or flowing water, wetlands, or other sensitive resources. No pesticides will be applied at these areas unless authorized by appropriate regulatory agencies.
- All pesticide equipment and containers will be inspected for leaks daily.
- Disposal of spent containers will be in accordance with the pesticide label.

5.2. Pesticide Spills and Cleanup

All reasonable precautions will be taken to avoid pesticide spills. In the event of a spill, cleanup will be immediate. Contractors will keep spill kits in their vehicles and in pesticide storage areas to allow for quick and effective response to spills. Items to be included in the spill kit are:

- Protective clothing and gloves
- Absorptive clay, "kitty litter," or other commercial absorbents
- Plastic bags and a bucket
- Shovel
- Fiber brush and screw-in handle
- Dust pan
- Caution tape
- Highway flares (use only on paved or unvegetated roads)
- Detergent

The response to a pesticides spill will vary with the size and location of the spill, but general procedures include:

- CIC and BLM notification
- Traffic control
- Dressing the cleanup team in protective clothing
- Stopping any leaks
- Containing spilled material
- Cleaning up and removing spilled pesticide and contaminated absorptive material and soil
- Transporting spilled pesticide and contaminated material to an authorized disposal site

5.3. Worker Safety and Spill Reporting

Pesticide contractors will be state-certified to apply pesticides and obtain and have readily available copies of the appropriate material safety data sheets for the pesticides used. All pesticide spills will be reported in accordance with applicable laws and requirements. Additional information regarding the handling of hazardous materials may be found in Appendix A7 – Hazardous Materials Management Plan.

6. LITERATURE CITED

Bureau of Land Management (BLM). 2007. Final Vegetation Treatments Using Herbicides Programmatic Environmental Impact Statement. FES 07-21. USDI BLM.

New Mexico Department of Agriculture (NMDA). 2009. New Mexico Noxious Weed List Update. Available at http://www.nmda.nmsu.edu/animal-and-plant-protection/noxious-weeds Accessed on March 3, 2011.

Arizona Department of Agriculture (ADA). 2011. Prohibited, Regulated, and Restricted Noxious Weeds. Available at www.azda.gov/psd/quarantine5.htm. Accessed on March 3, 2011.

This page intentionally left blank

Attachment B2-1: Noxious/Invasive Weeds Risk Assessment Form and Definition of Risk Factors

Directions: Retain one copy of this document with your Project files. Provide the applicable BLM Weed Coordinator with a second copy of the form and a Project map which will be retained for future use. A definition for each of the two factors can be found on the next page.

1. **Project Name:** SunZia Southwest Transmission Project
2. Date Risk Assessment was completed: (*Insert date completed*)
3. Describe steps taken to complete Risk Assessment: (*Discuss*)
4. **Project Description:** The proposed Project would include two new, single-circuit 500kV transmission lines located adjacent to one another within separate rights-of-way. The approximately 500-mile-long transmission line route would originate at a new substation (referred to as "SunZia East") in Lincoln County, New Mexico, and terminate at the Pinal Central Substation in Pinal County, Arizona.
5. **Project Location:** The Project may be located within Lincoln, Socorro, Sierra, Luna, Grant, Hidalgo, Dona Ana, and/or Otero counties in New Mexico, and Graham, Greenlee Cochise, Pinal and/or Pima counties in Arizona
6. **Factor 1** assesses the likelihood of noxious/invasive weed species spreading to the Project area. For this Project, the factor rates as (insert low, moderate, or high), (insert number) at the present time. This rating was based on the following findings:
   a) Relatively few infestations of noxious weeds within Project area (refer to Section 2.3 of Appendix B2 – Noxious Weed Management Plan for locations and number of occurrences along the right-of-way).
   b) Use of pre-existing access roads in the Project area means that fewer roads will be constructed, resulting in less soil disturbance. Temporary disturbance areas will be restored as specified in Appendix F – Right-of-Way Preparation, Rehabilitation, and Restoration Plan.
   c) Large portions of the Project area receive little human traffic, thereby potentially reducing the spread of weeds that spread due to human activities (hiking, biking, off-roading, etc.).
7. **Factor 2** assesses the consequences of noxious/invasive weed establishment in the Project area. For this Project, the factor rates as (*insert low, moderate, or high*) (*insert number*). This rating was based on the following findings:
   a) Relatively few infestations of noxious weeds exist within Project area, meaning a reduced possibility of an outbreak, yet possible expansion.
   b) Adjacent populations of native plants appear healthy and well established.
   c) Soil disturbance will be minimal due to small overall footprint of Project, and implementation of restoration plan will help deter weed establishment.

(Input your rationale here for this rating.)

8. **Factor 1 * Factor 2 = Risk Rating**: (*insert number*), (*insert low, moderate, or high*) (**Score and rating**).

(The Risk Rating is obtained by multiplying Factor 1 by Factor 2.)

9. Based on this risk rating, <u>preventative management measures</u> are/are not (circle one) needed for this Project. Preventative management measures developed for this Project are as follows:

The following preventative measures will be implemented to prevent the spread of noxious weeds during the construction activities, as well as during restoration and reclamation efforts.

The following preventative measures are to be applied on a case-by-case basis, where applicable and necessary, at the discretion of the BLM and Biological Monitors (weed specialists). Prior to ground disturbing activities, a qualified weed specialist will survey the proposed disturbance area and identify existing populations (if any). The weed specialist, working in conjunction with the BLM, will identify areas where the following measures shall be implemented. Also see Appendix B2 – Noxious Weed Management Plan, and Appendix F – Right-of-Way Preparation, Rehabilitation, and Monitoring Framework Plan in the Final POD.

a) Where feasible, construction will begin in weed-free areas before operating in weed-infested areas. All movement of construction vehicles outside of the Project area will be restricted to pre-designated access, contractor-acquired access, or public roads. All construction sites and access roads shall be clearly marked or flagged at the outer limits, prior to the onset of any surface-disturbing activity. All personnel shall be informed that their activities must be confined within the marked or flagged areas.
b) Prior to arrival at the work site, all Contractor vehicles and equipment will be cleaned using high-pressure equipment (compressed air). The cleaning activities will concentrate on tracks, feet, or tires and on the undercarriage, with special emphasis on axles, frame, cross members, motor mounts, and on underneath steps, running boards, and front bumper/brush guard assemblies. Vehicle cabs will be swept out, and refuse will be disposed of in waste receptacles. The location of vehicle cleaning stations will be identified by the construction contractor(s), and reviewed by the BLM Authorized Officer for approval. Also, when moving from weed infested areas to other areas within the Project area, all construction vehicles and equipment will be cleaned using compressed air before proceeding to new locations.
c) Construction personnel will inspect, remove, and dispose of weed seed and plant parts found on their clothing and equipment. Disposal methods will be approved by the BLM Authorized Officer.
d) The Contractor, with oversight by the biological monitor, will ensure that vehicles and equipment are free of soil and debris capable of transporting noxious weed seeds, roots, or rhizomes before the vehicles and equipment are allowed use of access roads on the right-of-way.
e) In areas of temporary disturbance where infestations are identified or noted, pre-disturbance treatment of noxious weeds will be implemented. The movement of stockpiled vegetation and salvaged topsoil will be limited to eliminate the transport of soil-borne noxious weed seeds, roots, or rhizomes, and marked as containing noxious seed materials to avoid mixing with weed-free soil.
f) Where necessary, during reclamation, the Contractor will return topsoil and vegetative material from infestation sites back to their original locations. The Contractor will use compressed air to remove seeds, roots, and rhizomes from the equipment before transport off-site. Cleaning sites will be recorded using global positioning system equipment, and this information will be reported to the BLM.
g) The Contractor will ensure that straw or hay bales, used for sediment barrier installations or mulch distribution, are obtained from state-cleared sources that are certified free of primary noxious weeds.
h) Immediately following construction, the Contractor will implement the reclamation of disturbed land, as required. Continuing revegetation efforts will ensure adequate vegetative cover, preventing the invasion of noxious weeds.

10. Based on this risk rating, Project modifications are/are not (circle one) needed for this Project. Project modifications developed for this Project are as follows:

Weed Risk Assessment completed by: (*type name[s])*

Reviewed by/Date Reviewed:_____ , signed copy on file
(Noxious Weed Coordinator)

Date:_____

This page intentionally left blank

RISK FACTORS

Factor 1

NONE, (0): Noxious/invasive weed species are not found within or are adjacent to the proposed Project area. Project activity is not likely to result in the establishment of noxious/invasive weed species in the Project area.

LOW, (1-3): Noxious/invasive weed species present in areas adjacent to but not within the Project area. Project activities can be implemented and prevent the spread of noxious/invasive weeds into the Project area.

MODERATE, (4-7): Noxious/invasive weed species located immediately adjacent to or within the Project area. Project activities are likely to result in some areas becoming infested with noxious weed species, even when preventative management actions are followed. Control measures are essential to prevent the spread of noxious/invasive weeds within the Project area.

HIGH, (7-10): Heavy infestations of noxious/invasive weeds are located within or immediately adjacent to the Project area. Project activities, even with preventative management actions, are likely to result in the establishment and spread of noxious/invasive weeds on disturbed sites throughout much of the Project area.

Factor 2

LOW TO NONEXISTENT, 1-3): None. No cumulative effects expected.

MODERATE, (4-7): Possible adverse effects on-site and possible expansion of infestation within the Project area. Cumulative effects on native plant communities are likely, but limited.

HIGH, (7-10): Obvious adverse effects within the Project area and probable expansion of noxious weed infestations to areas outside the Project area. Adverse cumulative effects on native plant communities are probable.

*FACTOR 1 * FACTOR 2* = **Risk Rating**

Risk Rating

NONE, (0): Proceed as planned.

LOW, (1-10): Proceed as planned. Initiate control treatment on noxious weed populations that get established in the area.

MODERATE, (11-49): Develop preventative management measures for proposed Project to reduce the risk of introduction or spread of noxious weeds into the area. Preventative management measures should include modifying the Project to include seeding the area to occupy disturbed sites with desirable species. Monitor area for at least 3 consecutive years and provide for control of newly established populations of noxious weeds and follow-up treatment for previously treated infestations.

HIGH, (50-100): Project must be modified to reduce risk level through preventative management measures, including seeding with desirable species to occupy disturbed sites and controlling existing infestations of noxious weeds prior to Project activity. Project must provide at least 5 consecutive years of monitoring. Project must also provide for control of newly established populations of noxious weeds and follow-up treatment for previously treated infestations.

Attachment B2-2: BLM-Approved Herbicides

Attachment B2-3: Herbicide Treatment Standard Operating Procedures

Appendix C – Cultural and Paleontological Considerations

Appendix C1 – Historic Properties Treatment Plan

HISTORIC PROPERTIES TREATMENT PLAN

Appendix C1 – Historic Properties Treatment Plan is a confidential appendix that will contain the Historic Properties Treatment Plan (HPTP) that will be developed for the project. As required by the Programmatic Agreement (PA), HPTP will provide information on the following:

- A brief description of the proposed action
- A list of the properties where data recovery is to be carried out
- A list of properties that will require archaeological monitoring during construction
- Research questions to be addressed
- Methods to be used during fieldwork for data recovery
- An archaeological monitoring plan during construction
- A cultural resource discovery plan
- Methods to be used during analysis
- Reporting and curation of artifacts
- Schedule for the submission of progress reports
- Recommendations for treatment of cultural resources during operation and maintenance of the project
- Qualifications of consultants employed to undertake the work.

As discussed in Section 1.2.3, the HPTP will be immediately added to this Appendix C1 upon approval by the BLM.

This page intentionally left blank

Appendix C2 – Historic Properties Identification Plan

HISTORIC PROPERTIES IDENTIFICATION PLAN

Appendix C2 – Historic Properties Identification Plan is a confidential appendix that will contain the Historic Properties Identification Plan (HPIP) that is being developed for the project. As required by the Programmatic Agreement (PA), the HPIP will provide information on the following:

- A brief description of the proposed action
- A brief cultural overview of the project area, including prehistoric, ethnohistoric, and historic.
- Research Contexts that may be addressed by the project and eligibility requirements for these contexts
- Site types and specific sites expected to be encountered during Class III Intensive Pedestrian Survey
- Methods to be used during Class III Intensive Pedestrian Survey and Site Recordation
- Cultural Visual Assessment Methodology

As discussed in Section 1.2.3, the HPIP will be immediately added to this Appendix C1 upon approval by the BLM.

This page intentionally left blank

Appendix C3 – Programmatic Agreement

Appendix C4 – Paleontological Resources Literature Review and Treatment Plan

TABLE OF CONTENTS

1. Introduction C4-1
2. Methods C4-1
3. Regulatory Framework C4-3
   3.1. National Environmental Policy Act of 1969 (P.L. 91-190, 83 Stat. 852, 42 USC 4321-4327) C4-3
   3.2. Federal Land Policy and Management Act of 1976 (P.L. 94-579) C4-3
   3.3. Paleontological Resources Preservation, Omnibus Public Lands Act, Public Law 111-011, Title VI, Subtitle D 16 USC (OPLA-PRP, 2009) C4-3
   3.4. New Mexico State Regulations C4-3
   3.5. Arizona State Codes C4-3
   3.6. Professional Standards C4-4
4. Paleontological Potential C4-4
   4.1. Determination of Paleontological Potential C4-4
5. Research Questions C4-7
   5.1. Introduction C4-7
   5.2. Categories of Potential Research C4-7
6. Paleontological Stipulations and Methods C4-8
   6.1. Stipulations and Methods C4-9
   6.2. Field Monitoring Procedures C4-12
   6.3. Construction Personnel Procedures C4-13
   6.4. Recordation and Documentation of Paleontological Resources C4-14
   6.5. Collection of Paleontological Resources C4-15
   6.6. Curation Plan C4-17
7. Mitigation Recommendations C4-18
   7.1. Proterozoic Deposits C4-19
   7.2. Paleozoic Deposits C4-19
   7.3. Mesozoic Deposits C4-20
   7.4. Tertiary Deposits C4-23
   7.5. Quaternary Deposits C4-23
8. Literature Cited C4-24

LIST OF TABLES

Table 1. Mileage of PFYC by Subroute C4-9
Table 2. Geological Units and their Associated Paleontological Sensitivity along the SunZia Southwest Transmission Project C4-21

LIST OF FIGURES

Figure 1. Paleontology Sensitivity Map C4-2

This page intentionally left blank

PALEONTOLOGICAL RESOURCES TREATMENT PLAN

1. INTRODUCTION

Paleontological resources (i.e., fossils) are the remains or traces of ancient life. Fossil remains may include bones, teeth, shells, leaves, and wood that are found in geological deposits within which they were originally buried. Paleontological resources include not only the actual fossils, but also the collecting localities and the geological deposits that contain the fossils (DOI 2000).

The purpose of the Paleontological Resources Treatment Plan (PRTP) is to assist the Bureau of Land Management (BLM) in planning and design efforts for the proposed Project as it relates to paleontological resource issues. The PRTP describes in detail the specific mitigation measures needed to avoid or reduce project-related impacts to paleontological resources, wherever feasible. This plan provides important background and contextual information useful for the paleontological resources mitigation program. The logistics, procedures, and methods outlined in this PRTP ensure compliance with federal and state regulations (BLM 1998, 2008, 2009).

The PRTP is a work plan for all of the paleontological-related activities that may ensue during the course of development of the Project. It is not the intent of the PRTP to present a comprehensive list of sites with discussions of all significant taxa found within the Project area. The PRTP offers a research-oriented framework and accompanying logistical guidelines to ensure significant non-renewable paleontological resources unearthed by development of the Project will be managed appropriately and in a timely manner, thereby effectively mitigating adverse impacts to these fossil resources.

2. METHODS

A review was conducted of relevant published geological and paleontological reports, unpublished geological and paleontological reports, and museum paleontological site records as part of the Environmental Impact Statement (EIS). This approach was followed in recognition of the direct relationship that exists between paleontological resources and the geological units within which fossils are entombed. By knowing the geology of a particular area and the fossil productivity of particular geological units that occur in the area, it is possible to predict where fossils will likely be found. No field work was conducted in the preparation of the PRTP.

Figure 1. Paleontology Sensitivity Map

3. REGULATORY FRAMEWORK

The following provides a brief overview of federal and state legislation, regulatory compliance, and professional standards applicable to paleontological resources in the Project area considered in the development of this Plan.

3.1. National Environmental Policy Act of 1969 (P.L. 91-190, 83 Stat. 852, 42 USC 4321-4327)

The National Environmental Policy Act of 1969 (NEPA) mandates policies to "preserve important historic, cultural, and natural aspects of our national heritage." NEPA further provides for reports regarding the environmental impacts of federal actions on public lands.

3.2. Federal Land Policy and Management Act of 1976 (P.L. 94-579)

Federal Land Policy and Management Act of 1976 (FLPMA) was enacted "to establish public land policy; to establish guidelines for its administration; to provide for the management, protection, development, and enhancement of the public lands; and for other purposes," and requires that important historic, cultural, and natural aspects of our natural history be preserved. As such, paleontological resources on federal lands have been determined to be property of the United States and must be protected under FLPMA.

3.3. Paleontological Resources Preservation, Omnibus Public Lands Act, Public Law 111-011, Title VI, Subtitle D 16 USC (OPLA-PRP, 2009)

The purpose of the Paleontological Resources Preservation Act of 2009 is to "manage and protect paleontological resources on federal land using scientific principles and expertise." It directs the Bureau of Land Management (BLM) to "develop appropriate plans for inventory, monitoring, and the scientific and educational use of paleontological resources, in accordance with applicable agency laws, regulations, and policies."

3.4. New Mexico State Regulations

The Trust Land Archaeology Department of the New Mexico State Land Office states that paleontological resources are among the many "assets" the Commissioner of Public Lands is responsible for on state trust lands. These assets are protected from unauthorized appropriation, damage, removal, or use.

3.5. Arizona State Codes

Arizona State Revised Statute 41-841 states that "On lands owned or controlled by this state or any agency of this state a person shall not knowingly excavate in or upon any historic or prehistoric ruin, burial ground, archaeological or vertebrate paleontological site, or site including fossilized footprints, inscriptions made by human agency or any other archaeological, paleontological or historical feature, except when acting as a duly authorized agent of an institution or corporation referred to in section 41-842."

3.6. Professional Standards

The Society of Vertebrate Paleontology (SVP) has established professional best practices for vertebrate paleontologists, along with more specific guidelines for the assessment and mitigation of adverse impacts to significant, non-renewable, paleontological resources. These standards and best practices were developed by SVP in cooperation with federal and state agencies. SVP Bylaws Article 12: Code of Ethics, Sections 1 and 4 states:

- "Section 1: It is the responsibility of vertebrate paleontologists to strive to ensure that vertebrate fossils are collected in a professional manner, which includes the detailed recording of pertinent contextual data, such as geographic, stratigraphic, sedimentologic, and taphonomic information."

- "Section 4: Scientifically significant fossil vertebrate specimens, along with ancillary data, should be curated and accessioned in the collections of repositories charged in perpetuity with conserving fossil vertebrates for scientific study and education (e.g., accredited museums, universities, colleges, and other educational institutions)."

These standards establish the protocol for the assessment and mitigation of impacts to paleontological resources. SVP (1995) summarizes its expectations for professional paleontologists operating on assessment and mitigation projects as:

- "Vertebrate fossils are significant nonrenewable paleontological resources that are afforded protection by federal, state, and local environmental laws and guidelines. The potential for destruction or degradation by construction impacts to paleontological resources on public lands (federal, state, county, or municipal) and land selected for development under the jurisdiction of various governmental planning agencies is recognized. Protection of paleontological resources includes: (a) assessment of the potential property to contain significant nonrenewable paleontological resources which might be directly or indirectly impacted, damaged, or destroyed by development, and (b) formulation and implementation of measures to mitigate adverse impacts, including permanent preservation of the site and/or permanent preservation of salvaged materials in established institutions."

4. PALEONTOLOGICAL POTENTIAL

4.1. Determination of Paleontological Potential

The Potential Fossil Yield Classification (PFYC) system is a measure of the likelihood of impacting fossil resources in a given area based on the occurrence of fossil-bearing geological units. This system predicts the probability of finding paleontological resources in a given area using geological maps of sufficient scale and detail. The numerical nature of the PFYC system also allows for ease of importation into a Geographic Information System (GIS), further facilitating the planning and management decision-making process. The five-part PFYC system, as defined by the BLM (2008), is explained below:

Class 1 – Very Low Potential: Geological units not likely to contain recognizable fossil remains.

- Units that are igneous or metamorphic, excluding reworked volcanic-ash units
- Units that are Precambrian in age

The probability for impacting any fossils is negligible. Assessment or mitigation of paleontological resources is usually unnecessary. The occurrence of significant fossils is nonexistent or extremely rare.

Class 2 – Low Potential: Sedimentary geological units not likely to contain vertebrate fossils or scientifically significant non-vertebrate fossils.

- Vertebrate or significant invertebrate or plant fossils not present or very rare
- Units that are generally younger than 10,000 years before present
- Recent eolian deposits
- Sediments that exhibit significant physical and chemical changes (i.e., diagenetic alteration)

The probability for impacting vertebrate fossils or scientifically significant invertebrate or plant fossils is low. Assessment or mitigation of paleontological resources is not likely to be necessary. Localities containing important resources may exist, but would be rare and would not influence the classification. These important localities will be managed on a case-by-case basis and assessment or mitigation may be unnecessary except in rare or isolated circumstances.

Class 3 – Moderate or **Undetermined Potential:** Fossiliferous sedimentary geological units where fossil content varies in significance, abundance, and predictable occurrence or sedimentary units of unknown fossil potential.

- Often marine in origin with sporadic known occurrences of vertebrate fossils
- Vertebrate fossils and scientifically significant invertebrate and plant fossils known to occur intermittently and predictably known to be low
- Poorly studied and/or poorly documented, potential yield cannot be assigned without ground reconnaissance

Class 3a – **Moderate Potential:** Units are known to contain vertebrate fossils or scientifically significant invertebrate or plant fossils, but these occurrences are widely scattered. Common invertebrate or plant fossils may be found in the area and opportunities may exist for hobby collecting. The potential for a project to be sited on or impact a significant fossil locality is low, but the potential is somewhat higher for common fossils.

Class 3b – **Undetermined Potential:** Units exhibit geological features and preservational conditions that suggest significant fossils could be present, but little information about the paleontological resources of the unit or the area is known. This may indicate the unit or area is poorly studied, and field surveys may uncover significant fossils. Units in this class may eventually be placed in another class when sufficient surveying and research is performed. The undetermined potential of the units in this class should be carefully considered when developing any mitigation or management plans.

This classification includes a broad range of paleontological potential. It includes geological units of undetermined potential, as well as units of moderate or infrequent occurrence of fossil resources. Management considerations cover a broad range of options as well and could include pre-disturbance surveys, monitoring, or avoidance. Ground-disturbing activities will require

sufficient assessment to determine where significant paleontological resources occur in the area of the proposed action and whether the action could affect the paleontological resources. These units may contain areas that would be appropriate to designate as hobby-collecting areas due to the higher occurrence of common fossils and lower concern about affecting significant paleontological resources.

Class 4 – High Potential: Geological units containing a high occurrence of significant fossils. Vertebrate fossils or scientifically significant invertebrate or plant fossils are known to occur and have been documented but may vary in occurrence and predictability. Ground-disturbing activities may adversely affect paleontological resources in many cases.

Class 4a – **High Potential:** Units exposed with little or no soil or vegetative cover. Outcrop areas are extensive, with exposed bedrock areas commonly larger than two acres. Paleontological resources may be susceptible to adverse impacts from ground-disturbing actions. Illegal collecting activities may impact some areas.

Class 4b – **High Potential:** These are areas underlain by geological units with high potential but have lowered risks of human-caused adverse impacts and/or lowered risk of natural degradation due to moderating circumstances. The bedrock unit has high potential, but a protective layer of soil, thin alluvial material, or other conditions may lessen or prevent potential impacts to the bedrock resulting from the activity.

- Extensive soil or vegetative cover; bedrock exposures are limited or not expected to be impacted
- Areas of exposed outcrop are smaller than two contiguous acres
- Outcrops form cliffs of sufficient height and slope so impacts are minimized by topographic conditions
- Other characteristics are present that lower the vulnerability of both known and unidentified paleontological resources

The probability for impacting significant paleontological resources is moderate to high, and is dependent on the proposed action. Mitigation considerations must include assessment of the disturbance, which may include removal or penetration of the protective surface alluvium or soils, potential for future accelerated erosion, or increased ease of access resulting in greater looting potential. If impacts to significant fossils can be anticipated, on-the-ground surveys prior to authorizing the ground-disturbing action will usually be necessary. On-site monitoring or spot-checking may be necessary during construction activities. Management prescriptions for resource preservation and conservation through controlled access or special management designation should be considered. Class 4 and 5 units may be combined as Class 5 for broad applications, such as planning efforts or preliminary assessments, when geological mapping at the appropriate scale is not available. Resource assessment, mitigation, and other management considerations are similar at this level of analysis, and impacts and alternatives can be addressed at a level appropriate to the application.

Class 5 – Very High Potential: Highly fossiliferous geological units that consistently and predictably produce vertebrate fossils or scientifically significant invertebrate or plant fossils and are at risk of human-caused adverse impacts or natural degradation.

Class 5a – **Very High Potential:** Units are exposed with little or no soil or vegetative cover. Outcrop areas are extensive with exposed bedrock areas commonly larger than two contiguous acres. Paleontological resources are highly susceptible to adverse impacts from ground-disturbing activities. Unit is frequently the focus of illegal collecting activities.

Class 5b – **Very High Potential:** These are areas underlain by geological units with very high potential but have lowered risks of human-caused adverse impacts and/or lowered risk of natural degradation due to moderating circumstances. The bedrock unit has very high potential, but a protective layer of soil, thin alluvial material, or other conditions may lessen or prevent potential impacts to the bedrock resulting from activity.

- Extensive soil or vegetative cover; bedrock exposures are limited or not expected to be impacted
- Areas of exposed outcrop are smaller than two contiguous acres
- Outcrops form cliffs of sufficient height and slope so impacts are minimized by topographic conditions
- Other characteristics are present that lower the vulnerability of both known and unidentified paleontological resources

The probability of impacting significant fossils is high to very high. Vertebrate fossils or scientifically significant invertebrate fossils are known or can be reasonably expected to occur in the impact area. On-the-ground surveys prior to authorizing any ground-disturbing activities or land-use adjustments will typically be necessary. On-site monitoring may be necessary during construction activities. Mitigation will often be necessary before and/or during these actions. Official designation of areas of avoidance, special interest, and concern may be appropriate.

5. RESEARCH QUESTIONS

5.1. Introduction

The significance of paleontological resources can be determined by placing the fossils and their associated contextual data into a pertinent research framework. A broad-based, initial research framework can be established that presents questions of scientific interest that can be asked of any sizeable paleontological assemblage.

5.2. Categories of Potential Research

The criteria for interpreting the significance of paleontological resources constitute the foundation for any research design. Since a fossil is not generally considered to be significant unless it corresponds to one or more of these classes, any research program must be designed to reflect this fact. Research questions that do not incorporate one or more of these criteria should not be considered or included in the research design.

Resource significance can be determined by examining the collected fossils in light of the following criteria:

- The resources provide data on the evolutionary relationships and developmental trends among organisms, both living and extinct.

- The resources provide data useful in determining the age of the rock unit or sedimentary stratum, including data important in determining the depositional history of the region and the timing of geological events therein.
- The resources provide data regarding development of paleobiological communities and/or the interaction between paleobotanical and paleozoological biotas.
- The resources represent unusual or spectacular circumstances in the history of life.
- The resources are in short supply and/or in danger of being depleted or destroyed by the elements, vandalism, or commercial exploitation and are not found in other geographic locations.

Based upon these criteria, several broad and basic categories for potential research are presented here as being of significant scientific interest, as well as being pertinent to the geological and paleontological history of the fossil strata that might be impacted by development of the Project. These categories do not, in and of themselves, compose a complete research framework. Rather, they provide a starting point from which to address the significance of any fossil assemblage identified from the Project. These categories include:

- Faunal composition of the assemblage
- Age of the assemblage
- Depositional environment of the sedimentary sequence
- Taphonomic factors influencing the assemblage
- Population structure/dynamics of individual species within the assemblage
- Paleoenvironment of the region at the time of deposition
- Questions specific to individual species represented within the assemblage

In addition to these general categories, specific research questions may be asked in advance of excavation within Paleozoic, Mesozoic, and Cenozoic rocks and deposits. For limestone formations, the collection of a representative sample of diagnostic fossils from exposures of each rock unit in the Project area may very likely help refine and augment understanding of the time of deposition of these formations. Also, the collection of such samples from the Project area will enable more complete faunal and lithologic correlations to be advanced.

For Mesozoic and Cenozoic deposits, research questions will likely focus upon (1) advancing accurate generic and specific identifications; (2) identifying diagnostic microfaunal remains to augment the macrofossil assemblage already reported from the formation; (3) correlating species identified among various sedimentary formations, both locally and throughout the western United States; and (4) elucidating the taphonomic factors that have affected fossil preservation. With these questions in mind, the mitigation program must, in turn, focus upon collecting not every fossil and/or fossil fragment encountered but rather, those fossils sufficiently complete and diagnostic to enable generic and specific identifications to be made. The program must also endeavor to collect microfossil fossils through screen-washing of exposed sediments. Finally, at the time the fossil resources are exposed, detailed lithologic and positional data should be recorded, sediment samples should be collected and preserved, and sites should be photographed.

6. PALEONTOLOGICAL STIPULATIONS AND METHODS

The following are stipulations and methods to be employed during construction conducted in association with development of the Project. These stipulations and methods will effectively

mitigate adverse impacts to paleontological resources to less than significant levels. These measures are summarized below as Paleontology Actions (PA) 1 through 6. The specifics of the efforts, including the monitoring of excavation, curation, preparation of the final report, and storage of specimens are described in greater detail subsequently. These stipulations and methods are subject to review by the BLM, and may be amended following completion of the pre-construction survey (PA 2, below).

6.1. Stipulations and Methods

6.1.1. Prior to Construction

PA 1 An orientation workshop shall be prepared, reviewed by the BLM, and presented by a professional paleontologist to explain paleontological mitigation guidelines and procedures to the contractor and construction workers. This workshop can be presented in conjunction with any pre-construction meetings conducted prior to excavation. The workshop will review the PRTP and will endeavor to explain the nature, appearance, and importance of fossil vertebrates, invertebrates, and plants. The responsibilities of construction personnel in a paleontological mitigation context will also be explained. Construction workers shall not collect any fossils found during construction before their significance can be assessed by a qualified paleontologist. All construction inspectors and environmental monitors shall also be briefed on the locations of high to moderate potential areas for paleontological resources as part of the training program. It will be stated during the paleontology briefing that it is unlawful for construction inspectors or environmental monitors to collect fossils from any construction area, as these fossils belong to the public and will be placed in a recognized curation facility, such as a museum or university, where they will be curated, stored, maintained, and made available for scientific study.

Table 1. Mileage of PFYC by Subroute

Subroute	Total Miles	PFYC				
		1	2	3	4	5
1A	219.1	52.4	51.2	9.8	105.7	0.00
1B1	223.3	72.6	49.5	3.4	97.8	0.00
1B2	209.2	64.1	43.9	3.4	97.8	0.00
1B3	206.3	70.4	39.9	0.7	95.3	0.00
1C1	221.6	100.6	37.4	3.3	80.3	0.00
1C2	218.8	100.4	38.1	3.3	77	0.00
1C3	212.7	98.7	39.6	3.3	71.1	0.00
2A	258.9	118	21.1	13.4	106.4	0.00
2B	261.2	118.3	40.6	4.9	97.4	0.00
3A	123.4	64.9	6.8	24.7	27	0.00
3B	128.6	78.1	4.1	37	9.4	0.00
4A	132.9	30.6	4	72.8	25.5	0.00
4B	133.0	29.3	4	64.8	34.9	0.00
4C1	139.0	19.7	1.8	65.7	51.8	0.00
4C2	151.8	22.9	3.2	76.8	48.9	0.00
4C3	172.9	23.4	28.5	106.2	14.8	0.00

PA 2 A pre-construction survey of the area of potential effect for the Project shall be conducted in advance of excavation, under permit from the BLM. This survey will examine existing rocks and sediment exposed within areas of high to moderate potential for paleontological resources (PFYC of 5 to 3), as well as any recorded localities in the immediate vicinity that might be impacted by the development of new access roads or other construction-related activities (Table 1). The survey will primarily be along the proposed centerline, access roads, staging areas, tower sites, and any other areas that are slated for ground disturbance from the Project. The survey will confirm and augment geological mapping, locate and collect any significant paleontological resources exposed at the surface, and assess paleontological potential with more precision. Particular attention will be paid to the Upper Santa Fe Group, Camp Rice Formation, Sierra Ladrones Formation, Palomas Formation, 111 Ranch Beds, Gila Group, St. David Formation, Middle and Lower Santa Fe Group, Quiburis Formation, Mineta Formation, Popotosa Formation, Baca Formation, Cub Mountain Formation, Palm Park Formation, El Rito Formation, undivided Cretaceous rocks, McRae Formation, Tres Hermanos Formation, Mesaverde Group, Chinle Group, and Colina Formation. The results of the pre-construction survey will be presented in report form at the conclusion of the study.

6.1.2. During Construction

PA 3 If paleontological resources are found at any time during construction, work shall be redirected to another area nearby so that the scientific significance of the discovery may be assessed. Construction monitors shall notify the on-site construction monitoring coordinator. As part of the monitoring procedure, a qualified professional paleontologist with regional experience shall then assess the significance of the discovery and recommend additional mitigation measures, as necessary. The paleontologist shall be retained to perform inspection of the excavation and to salvage exposed fossils. Monitors shall also determine whether any fossils discovered are part of an archaeological deposit. If so, it shall then be considered a cultural resource discovery and treated according to the procedures specified by the cultural resource specialists prior to construction.

This measure will be implemented by requiring paleontological monitoring in rock units designated as having high or moderate potential to contain paleontological resources (PFYC of 5, 4, or 3). One paleontological monitor should be placed at each construction location where and when ground disturbance is occurring in all areas of high paleontological potential (PFYC of 5 or 4). In areas of moderate or undetermined paleontological potential (PFYC of 3), full-time monitoring may not be required, but monitors should instead spot check exposed cuts and spoil piles on a regular basis. Monitors will be qualified paleontologists with regional experience and under permit from the BLM. Paleontological monitors are empowered to determine significance in the field and collect contextual data immediately. Paleontological monitors may, upon direct examination of rock or sediment outcrops, and based upon their professional experience, determine that the paleontological sensitivity of the formation or rock unit in question differs from previous reports (e.g., a formation designated as “high sensitivity” may be changed to “low sensitivity” based upon field examination and monitoring, and then reduced or eliminated appropriately).

If significant fossils are discovered by environmental monitors and/or construction personnel in areas of undetermined or low paleontological potential (PFYC of 3, 2, or 1), work shall be

redirected so that the scientific significance of the discovery may be assessed. Where such fossils are encountered at any time during construction, crew members should proceed as outlined below.

In rock units where scientifically significant invertebrate fossils are anticipated (e.g., in Paleozoic limestone), rocks containing a representative sample of the overall fossil assemblage will be collected. Rock quarrying may be necessary in these instances, in which case construction personnel may be requested to provide appropriate equipment for the most efficient and timely removal of the resource.

In rock units where vertebrate fossils are anticipated (e.g., Tertiary fluvial and lake sediment), fossils will be salvaged only when determined upon examination in the field to be diagnostic or potentially diagnostic. Large vertebrate fossils exposed by excavation will be expeditiously jacketed with plaster bandages or strips of burlap saturated with plaster, then removed and taken to the paleontology laboratory for preparation, identification, and permanent storage. A small test sample of fossiliferous sediment (about 100 pounds) may be collected for microvertebrate fossils (e.g., rodents, birds, rabbits) in areas that contain microvertebrate fossils on the surface or that may contain microvertebrate fossils in the sediment. If the test sample contains scientifically significant microvertebrate fossils, then a much larger sample will be collected and processed for microvertebrate fossils (about 2,724 kilograms [6,000 pounds or 2.4 cubic meters]). This sedimentary matrix will be stockpiled on-site, and subsequently processed. Collected specimens will be identified and curated. Fossil animal trackways, if encountered, will be avoided where feasible. If avoidance is not possible, impacts to the trackways will be mitigated through either collection or replication. Contextual data associated with the resources will be recorded in the field and sites will be photographed.

PA 4 The preservation of significant fossils (if found during construction) by removal will occur as described in PA 3, unless it is not feasible. Due to the potential for rapid deterioration of exposed surface fossils, preservation by avoidance is generally not an acceptable mitigation measure (except, in some cases, for exposed fossil-animal trackways). In cases where the fossil cannot be removed immediately, the location of the fossil shall be stabilized to prevent further deterioration prior to data collection under the direction of a qualified paleontologist. Stabilization in these cases can (as necessary and safely feasible) include the following: removal of overburden; exposure of the resource; application of an appropriate hardening agent (*e.g.*, Vinac for vertebrate fossils); and, in those cases where the resource cannot be collected at all, reburial of the resource. Data collection in these cases will include documentation of pertinent data (lithology, stratigraphy, taphonomy, etc.), as well as photo-documentation where possible. This measure will be further implemented by the mobilization of additional paleontological field monitors if unusually large discoveries are encountered during excavation. This procedure will optimize data collection and avoid delays.

6.1.3. After Construction

PA 5 For all fossils (vertebrate, invertebrate, or plant) collected during the pre-construction survey or during monitoring of construction, a data-collection program shall be undertaken that includes preparation of collected specimens to a point of identification and permanent preservation (including screen washing of fossiliferous sediment samples to collect small to

microscopic vertebrate fossils); preparation of large vertebrate fossils collected in plaster jackets; long-term stabilization of all collected significant fossils; and analysis. The paleontological monitoring and salvage team shall include an expert in vertebrate paleontology. A final report, including an itemized and accessioned inventory of collected specimens, shall be prepared by a professional vertebrate paleontologist and distributed to the appropriate lead agencies. This report shall include any important invertebrate and/or plant-fossil localities. These items and procedures are discussed elsewhere under "Curation Plan."

PA 6 All fossils collected before or during construction shall be curated at the expense of the Proponent at a federally approved research facility, such as the New Mexico Museum of Natural History and Science. A repository agreement for curation would be reviewed and approved by the third-party contractor on behalf of the Proponent, BLM, and the repository, which would provide guaranteed future research access to the fossils. Fossils discovered on private land would be considered property of the landowner. The landowner would have the option to keep the fossils or donate them to a federally approved repository, preferably the same repository receiving fossils discovered on federal and state lands.

6.2. Field Monitoring Procedures

The following procedures and guidelines will be used to ensure the proper protection, salvage, and collection of paleontological resources as they are encountered. Procedures for monitoring and fossil collection by qualified paleontological field monitors are addressed, as well as guidelines for construction personnel and excavation contractors who may encounter paleontological resources in the course of their activities during excavation.

A qualified, professional vertebrate paleontologist trained in paleontological salvage guidelines and techniques will be on-site during all excavation activities conducted in rock units identified to have high paleontological potential and will spot check exposed cuts and spoil piles in rock units identified to have moderate or undetermined paleontological potential. Field monitoring and fossil salvage will be conducted under permit from the BLM. Paleontological monitors will be equipped to efficiently collect fossils as they are unearthed to avoid excavation or construction delays. Field paleontologists may, based upon their experience and upon consultation with senior paleontological staff, amend determinations of potential and, accordingly, reduce or eliminate monitoring activities, as dictated by the nature of the exposed rock outcrop.

Paleontological monitors and/or their necessary equipment (including trucks) will be working in the area of active excavation. Construction equipment operators will be instructed to give these monitors a wide berth for safety reasons (approximately 20 feet at least). The paleontological monitors will be prepared to quarry rock samples where necessary, and to remove samples of sediment likely to contain the remains of small to microscopic fossil invertebrates and vertebrates. The monitors may enlist the assistance of construction personnel and equipment in this undertaking to avoid delays in excavation activities. The monitors will be empowered to temporarily halt or divert equipment to allow removal of abundant or large specimens.

The paleontological monitors will be equipped with appropriate safety materials (hard hats, orange vests with reflective yellow tape, steel-toed boots, etc.).

Because the monitors will be performing their duties in close proximity to the excavation equipment, they will have been trained to make themselves visible to equipment operators while in the field, and will endeavor to make eye contact with the operators prior to entering a potentially hazardous area. They will frequently be required to operate vehicles or equipment near active excavation areas. For this reason, the operators must be alert at all times to the presence of paleontological monitors and their equipment in the excavation area.

6.3. Construction Personnel Procedures

Crews and supervisors should be on the lookout at all times for fossils, bones, animal trackways, charcoal, ash, or other paleontological resources exposed during all excavation activities. Although paleontological monitors will be present during excavation in rock units with high fossil potential, and additionally will spot-check excavation in geological units with a moderate or undetermined potential, on-site personnel and/or other construction contractors may provide invaluable assistance in the salvage and collection of paleontological resources.

Upon encountering an exposed fossil or other paleontological resource, the paleontological monitor(s) will stake-off and flag an area of approximately 2 meters on all sides of the discovery to alert equipment operators to the presence of a potential resource. The monitor(s) will then further expose the discovery to assess the potential significance and determine the appropriate collection requirements. Construction crews must avoid these staked-off/flagged areas by a minimum of 6 meters until the paleontologists have authorized continued excavation.

6.3.1. Fossils Discovered by Construction Personnel during Excavation

As stated above, a qualified paleontological monitor will be on site initially during all excavation activities conducted in rock units identified to have high to moderate paleontological potential. However, it is possible that construction crew members or equipment operators may be the first individuals to observe paleontological resources exposed by excavation. It is also possible that fossils or other resources will be encountered in areas of low or undetermined paleontological potential at times when no paleontological monitor is present. In these cases, *it is unlawful for construction workers and other construction contractor personnel to collect fossils from any construction area during construction*. The following guidelines are, therefore, to be employed in these cases.

In the event the construction crew or the equipment operators suspect they have uncovered fossils or other resources, preservation of the resource(s) and notification of the paleontological monitor are of prime importance. Upon uncovering a potential resource in these sensitive areas, construction personnel should immediately divert excavation activities away from the potential site. Suspected resource localities should be avoided by a *minimum* of 6 meters until the paleontological monitor has approved further excavation. Subsequent to diverting construction equipment, operators and crew members must *immediately* endeavor to catch the attention of the paleontological monitor. The sooner the paleontological monitor is alerted to the presence of the discovery, the sooner he or she can stake-off and flag the area, assess the significance of the remains, collect the resource (if necessary), and permit excavation to continue in that area. Excavation in the affected area must not continue until authorized by the paleontological monitor.

If the paleontological monitor is not in the immediate vicinity, the operator or crew member should immediately stake-off and flag the affected area so subsequent excavation equipment does not further damage or destroy the resource. Equipment operators are advised to carry lathe stakes and colored flagging with them at all times to facilitate this mitigation effort. Once the affected area is staked-off and flagged (if possible), the operator or crew member must then *immediately* contact the environmental inspector or CIC. It is this inspector's responsibility to contact the paleontological monitor in this situation. The paleontological monitor will respond to the inspector's request for assistance as soon as it is possible for him or her to do so. Construction crews and their supervisors must keep in mind that the paleontological monitor may be involved in collecting resources elsewhere in the excavation, so an immediate response may not always be possible.

In every case, supervisors and crew members should *avoid moving or disturbing the resource(s)* until the paleontologist(s) have determined the significance of the discovery. Again, *it is unlawful for construction workers or other construction contractor personnel to collect fossils from any construction areas during construction*. Work may not continue in the affected area until the paleontological monitor(s) have removed or otherwise mitigated impacts to the discovery(s) and authorized further excavation.

6.3.2. Resources Identified in Spoil Piles by the Paleontological Monitor

Fossil resources discovered in the spoil piles by the paleontological monitor will be flagged off and collected by the monitors for salvage and removal. Construction personnel must not back-fill exposed holes until the stakes and flagging have been pulled by the paleontologist on site. Stakes and flagging will be removed subsequent to resource collection, and back-filling of holes will then be allowed to proceed.

When bulk samples of sedimentary matrix need to be collected during excavation, the most expeditious and cost-effective manner to remove this material is to employ the construction crew members and equipment for a brief period to remove the sediment in bulk (in the case of a spoils pile, that task has already been accomplished). Exceptionally large fossils or assemblages of fossils are also most easily and economically collected in this manner.

6.4. <u>Recordation and Documentation of Paleontological Resources</u>

The paleontological mitigation program is designed to collect not only exposed paleontological resources, but also significant contextual data associated with these resources. For this reason, site paleontologists will often be required to stake-off and flag some areas within the excavation in order to plot resource localities, measure stratigraphic sections, map fossiliferous horizons, photograph exposures, and so forth. Again, the equipment operators must avoid these staked-off and flagged areas until the paleontologists have authorized continued excavation.

All paleontological field monitors will be trained in standardized methods and procedures to ensure data collection is uniform among all identified paleontological resource localities. All data collection and recordation techniques, as well as standard safety equipment and safety procedures, will be reviewed prior to the project start-up.

During the paleontological mitigation program, all observed pertinent data will be recorded on waterproof field notebooks with permanent ink on-site at the time the resource has been exposed and collected. All paleontological field notes will be retained at the appropriate paleontological resource repository. Photocopies will be generated frequently to ensure there are always permanent copies in the event a field notebook is lost or misplaced.

Monitors will be equipped with Brunton transits or equivalent compasses with built-in clinometers to permit precise elevational siting of fossil horizons. It is imperative that accurate stratigraphic information is obtained in this way. The use of global positioning system units will allow monitors to accurately plot paleontological resource localities on project maps that will be provided for them.

Characterization of the sedimentary lithology is important in paleontological studies. The character of the sediment surrounding the resources provides many clues as to the environment of deposition. Lithologic description is enhanced by the use of rock color charts to uniformly assess sediment color. Additionally, details, such as grain size, shape, sorting, roundness, and sphericity of lithologic samples, will be determined by the monitor in the field with a hand lens. Small samples of sediment will be collected at each resource site. Monitors will also sketch measured stratigraphic sections of the area surrounding a resource locality. Photo-documentation will be conducted where judged appropriate by the field monitor.

For taphonomic studies, magnetic north will be noted using a Brunton transit or equivalent compass and written on the fossil specimens (or plaster jackets that encase them) so the original orientation of the specimen(s) in the sediment is preserved. Other taphonomic data (evidence of trampling, weathering, etc.) will be noted where pertinent. However, in most cases these determinations are better performed in the laboratory.

For safety purposes, paleontological field monitors will be equipped with hard hats, bright orange vests with a reflective coating, and steel-toed boots.

6.5. <u>Collection of Paleontological Resources</u>

6.5.1. Megafaunal Sampling Plan

The distribution of large vertebrate fossils unearthed by the excavation equipment is herein considered random. The megafaunal sampling plan will, therefore, be strictly dictated by the excavation activities planned for a given development project. The paleontologists will monitor *only* in the areas being excavated in rock units that have high (or, in some cases, moderate or undetermined) paleontological potential. Excavation equipment will unearth fossil resources while the paleontological field monitor is observing the excavation. The specific quantity and quality of the fossils cannot be known before hand. Based upon previous studies, however, it can be proposed that the potential for vertebrate fossils is relatively high where exposures of fluvial and lake sediment is present at the surface or in the subsurface.

As discussed above, *it is not the goal of the megafaunal sampling plan to collect all paleontological resources discovered*. The paleontological monitor determines whether the paleontological resource should be collected at the time of discovery. The criteria for this task are very clear. Monitors collect only fossils possessing articulated surfaces or other diagnostic

features that aid in precise identification. Bones or bone fragments of an indeterminate or unidentifiable nature are usually not to be collected, save in those areas where fossil bones have not previously been recorded. When a paleontological monitor discovers a megafaunal resource locality exposed by excavation, the fossils will be expeditiously jacketed with plaster bandages or strips of burlap saturated with plaster, then removed to a curatorial facility for preparation, identification, and permanent storage.

6.5.2. Microfaunal Sampling Plan

The sampling of microvertebrate fossils is critical to understanding both the temporal and the paleoecological aspects of the sediment encountered during construction. Microvertebrate fossils (especially rodents) can be useful to paleontologists in determining the age of the sediment in which they are deposited. Collection and analysis of fossil pollen can potentially enable determination of changes in plant distributions and microclimate through time.

Microfauna are also extremely useful in determining the paleoenvironment in existence at the time the sediment was deposited. Small animals such as amphibians and reptiles are very specific to certain environments (pond turtles, for instance, live near water). Amphibians in a sample are also indicative of a wet environment since they must reproduce in water. Analysis of the microfauna can, therefore, enable us to determine what the climate was like during the time periods that span the rock units exposed during development. Large vertebrates are less useful for paleoenvironmental analysis, due to their proclivity for traveling large distances during their lifetime. It follows, therefore, that small animals that have restricted geographic ranges will be more likely to yield environmental data.

The collection of bulk samples of sediment that contain microvertebrate fossils has been standardized by Wolf (1975). Standard samples of fossiliferous sediment are generally accepted to be 2,724 kilograms (6,000 pounds = 2.4 cubic meters) per lithologic horizon. As discussed in PA 3 above, the sampling calls for standard samples of sediment to be collected within members or formations that have proved to produce terrestrial vertebrate fossils, or have undetermined potential to produce such fossils. A small test sample of fossiliferous sediment (about 100 pounds) may be collected for terrestrial microvertebrate fossils (e.g., rodents, birds, rabbits) in areas that contain microvertebrate fossils on the surface or that may contain microvertebrate fossils in the sediment. If the test sample contains scientifically significant microvertebrate fossils, then the much larger standard sample will be collected and processed for microvertebrate fossils (about 2,724 kilograms [6,000 pounds or 2.4 cubic meters]). Sediment will be stockpiled on-site, and subsequently processed. Collected specimens will be identified and curated.

6.5.3. Marine Invertebrate Sampling Plan

Many Paleozoic rocks are fossiliferous and have potential to yield significant marine invertebrate fossils. Samples of these rocks containing representative samples of fossil assemblages contained therein will be collected from areas of potential impact (possibly by quarrying if necessary) and removed for laboratory preparation and storage. The size and nature of the collected samples will be determined during pre-construction field reconnaissance.

6.5.4. Collection/Replication of Fossil Trackways

Unique fossil trackways may occur within the Project area. Trackways are highly visible and are subject to removal by unauthorized collection. In the event that trackways cannot be avoided, overburden will be removed to expose the trackways, which will then either be removed (preferred) or replicated for curation. Collected specimens will be curated at a federally approved repository in accordance with appropriate federal, state, and county permits.

6.6. Curation Plan

Curation of fossil specimens collected during the paleontological mitigation program includes the preparation of collected specimens to a point of identification and permanent preservation, including the screen washing of fossiliferous sediment samples to collect small to microscopic vertebrate fossils. Large specimens encased in plaster jackets taken from the site will be prepared in the paleontology laboratory.

6.6.1. Processing and Curation Techniques

The curation plan calls for laboratory preparation of collected fossils to a point of identification and permanent preservation (*not* exhibition). This preparation generally requires exposure of the collected resource(s) by removal of the surrounding sedimentary matrix from the jacket. This matrix may be saved for later microfossil processing. Once the matrix has been removed and the specimen has been cleaned, the fossil is hardened with Vinac, a modified polyvinyl acetate homopolymer, which has been thinned with acetone to enable the hardener to more fully penetrate the fossil. Vinac may be applied several times before the fossil is deemed to be sufficiently sturdy for permanent storage. Excess plaster from the jacket is then trimmed to reduce the amount of storage space required by the specimen.

The curation plan also includes the processing of standard samples of fossiliferous matrix. Sedimentary matrix will be washed with water through stacked sets of 20- and 30-mesh screens and sun-dried. Where appropriate, some sediment samples may be washed through more finely-meshed screens to enable the collection of microscopic ostracodes or fossil pollen. To accelerate the breakdown of fossiliferous matrix, sediment may be oven-roasted to promote drying, then re-submerged in water to facilitate disaggregation of clays and fine silts. Subsequent screen washing will remove these fine sediments and leave fossil specimens in a clean concentrate. This concentrate will be visually examined with a binocular microscope and hand-sorted to remove fossil specimens.

The curation plan further includes sampling for fossil pollen. In those cases where pollen is identified from bulk samples in the field, additional sampling should be initiated where warranted in a series of more precise (e.g., 2 centimeter) sampling horizons. This will potentially enable determination of changes in plant distributions and microclimate through time, as well as age determination.

Should plant macrofossils be exposed or identified, such fossils should be collected and prepared to a point of identification and permanent preservation (*not* exhibition). Preparation generally requires full exposure of the collected resource(s) by splitting of thin sedimentary layers along their bedding planes, followed by application of a hardening agent. Misting with a

10:1 water/white glue mixture is usually sufficient for preserving such fossils. Application of nitrocellulose thinned with acetone is also recommended in some instances (LePage and Basinger 1993). In some cases, at the discretion of the Principal Investigator, select rock slabs thought to contain fossilized plant remains will be left intact for future researchers.

Other curatorial tasks will include the identification, curation, and accessioning of all collected specimens into the retrievable storage collections of a federally approved, curation facility. All data pertaining to the specimens will be recorded in the collections database of the repository. Resource locality information will also be plotted on topographic maps and entered into a computerized locality database. Card stock printouts of all pertinent faunal, floral, locational, and lithologic data pertaining to each resource locality will be produced and filed. Card stock files from the locality database will also be printed and kept on file. All paleontological resources will be catalogued and accessioned under a unique number, which will identify the appropriate property and/or development project as the source of the fossils.

Following preparation, fossils will be stored in steel cabinets with steel geological specimen trays. Accession and locality data will be printed in archival ink on acid-free paper tags associated with each specimen, generated from the specimen database. Accession numbers of large fossils will be written on the bone in permanent ink. Large fossils will be stored in their plaster jackets where necessary to help retain the integrity of the bone. Excess plaster will be cut away prior to storage to maximize storage space. Microfossils will be stored in glass vials with cork stoppers. Extremely small specimens (e.g., ostracodes) will be placed in gelatin capsules within the glass vials. Accession data slips, also generated from the computer database, will be placed inside each of the glass vials to prevent inadvertent shuffling of the collection, and provide a means of “earthquake-proofing” the collection. The glass vials will be placed in cardboard jewelers’ boxes with their data slips, and then permanently stored in the geological specimen trays. Labels bearing accession number data will be glued to rock slabs bearing marine invertebrates or fossil plant remains, in such a manner so as not to damage or obscure the fossil(s).

Specimens collected during the course of the mitigation program will be identified by professional paleontologists who have appropriate expertise in vertebrate and invertebrate paleontology, or in paleobotany.

A final report of methods and results of the paleontological mitigation plan will be provided at the cessation of the mitigation program. The report will include a detailed discussion of how the research goals of the project have been met, in addition to descriptions of significant discoveries, discussion of the curation of the resources, and results of sampling and analysis, as well as an itemized accession inventory of all specimens collected. A discussion of the significance of each taxon discovered will be provided, where feasible. All resource locality information will be presented as a confidential appendix and a printout of all locality data, as well as pull-out maps with all paleontological resource localities plotted.

7. MITIGATION RECOMMENDATIONS

This section summarizes the results of the paleontological inventory and impact analysis presented in the Final Environmental Impact Statement for the Project. The paleontological sensitivity for the Project is presented in Figure 1. This section also applies the mitigation

measures described in the previous section to the Project area according to broad geological units. These measures apply to the length of the proposed Project, as well as to all accompanying areas of potential impact (tower locations, access roads, staging areas, etc.). These measures can be finalized upon receipt of the final construction plans. Recent sediment present at the surface throughout the extent of the Project area may be underlain by fossil-bearing geological units. Excavation in the younger sediment may expose paleontologically sensitive rocks or deposits at depth. Geological units crossed by the Project subroutes are presented in Table 2.

7.1. Proterozoic Deposits

Formations: Undifferentiated granitic and metamorphic rocks

Rock Type: Granite and metamorphic rocks

Potential: **Very Low**

Recommendations: Worker education and briefing of environmental monitors and construction inspectors should be conducted prior to excavation (PA-1). The BLM requires no other monitoring or mitigation protocols for Proterozoic rocks. The discovery of any and all paleontological resources (fossils) as the result of operations under this plan shall immediately be brought to the attention of the authorized BLM officer. The proponent shall cease operations until authorized to proceed by the authorized BLM officer.

7.2. Paleozoic Deposits

Formations: Artesia Group, San Andres Formation, Glorieta Sandstone, Yeso Formation, Abo Formation, Hueco Formation, Bursum Formation, Colina Formation, undivided Pennsylvanian rocks, Madera Group, Percha Group, Sly Gap Formation, Lake Valley Formation, Caballero Formation, McKellingon Formation, Aleman Dolomite, and Cutter Dolomite

Rock Type: Dolomite, limestone, and shale

Potential: **Moderate/Undetermined** (Colina Formation)

Low (All other Paleozoic formations)

Recommendations: In deposits of Paleozoic age that have a potential of moderate/undetermined, the "Prior to Construction" general mitigation measures should be applied to this area of excavation. These measures include worker education and briefing of construction personnel (PA-1) and pre-construction survey of the area(s) of potential impact (PA-2). The BLM requires no other monitoring or mitigation protocols for Paleozoic rocks along the proposed SunZia Southwest Transmission Project. The discovery of any and all paleontological resources (fossils) as the result of operations under this plan shall immediately be brought to the attention of

the authorized BLM officer. The proponent shall cease operations until authorized to proceed by the authorized BLM officer.

7.3. Mesozoic Deposits

Formations: Undivided Cretaceous rocks, McRae Formation, Tres Hermanos Formation, Bisbee Group, Mesaverde Group, Dakota Group, Intertongued Dakota-Mancos Sequence, Mancos Shale, undivided Cretaceous-Jurassic sedimentary rocks, and Chinle Group

Rock Type: Sandstone, siltstone, and shale

Potential: **Moderate/Undetermined** (Undivided Cretaceous rocks, McRae Formation, Tres Hermanos Formation, Mesaverde Group, and Chinle Group)

Low (Bisbee Group, Dakota Group, Intertongued Dakota-Mancos Sequence, Mancos Shale, undivided Cretaceous-Jurassic sedimentary rocks)

Recommendations: In deposits of Mesozoic age that have a potential of moderate/undetermined, the "Prior to Construction" general mitigation measures should be applied to this area of excavation. These measures include worker education and briefing of construction personnel (PA-1) and pre-construction survey of the area(s) of potential impact (PA-2). Monitoring of construction by a professional paleontologist under permit from the BLM (PA-3) is also required. Field monitoring should be initiated full time, with the provision that, as warranted by field examination of deposits exposed by ground disturbance, the field effort may be reduced to part-time monitoring or spot-checking where feasible as the project proceeds. Large vertebrate fossils will be jacketed and collected. Sediment yielding remains of aquatic or terrestrial vertebrates will be screened in the field to determine the potential for the collection of significant paleontological resources and the efficacy of more detailed sampling. Sediment yielding invertebrate fossils will be screened in the field and sampled only in those cases where significant data are likely to be found. Fossil animal trackways, if not avoided, will be either collected or replicated. If significant fossils are collected, then PA-4 through PA-6 will apply.

Table 2. Geological Units and their Associated Paleontological Sensitivity along the SunZia Southwest Transmission Project

Map Unit	Age	Geological Name	Rock Type	Distribution	PFYC	Paleontological Sensitivity	Survey
Quaternary Sediment							
Qr	Quaternary	River alluvium	Alluvial sediment	Arizona	2	Low	No
Qp	Quaternary	Piedmont deposits	Unconsolidated sand and gravel	New Mexico	2	Low	No
Qa	Quaternary	Alluvial deposits	Unconsolidated sand and gravel	New Mexico	2	Low	No
Qe	Quaternary	Eolian deposits	Unconsolidated windblown sediments	New Mexico	1	Very Low	No
Qpl	Quaternary	Lacustrine and playa deposits	Lacustrine sediments	New Mexico	1	Very Low	No
QTs	Quaternary	Upper Santa Fe Group	Fluvial sediments	New Mexico	4	High	Yes
QTs	Early Quaternary-Pliocene	Camp Rice Formation	Alluvial, fluvial, and lacustrine sediments	New Mexico	4	High	Yes
QTs	Early Quaternary-Pliocene	Sierra Ladrones Formation	Sandstone and mudstone	New Mexico	4	High	Yes
QTs	Early Quaternary-Pliocene	Palomas Formation	Fluvial sands and gravels	New Mexico	4	High	Yes
Tertiary Rocks							
Tsy	Pliocene	111 Ranch Beds	Fluvial and lacustrine sediments	Arizona	4	High	Yes
Tsy	Pliocene	Gila Group	Sandstone, siltstone, and conglomerate	New Mexico, Arizona	4	High	Yes
Tsy	Pliocene	St. David Formation	Sandstone and mudstone	Arizona	4	High	Yes
Tsf	Pliocene	Middle and Lower Santa Fe Group	Fluvial sediments	New Mexico	4	High	Yes
Tsm	Miocene	Quiburis Formation	Mudstone and siltstone	Arizona	3-4	Undetermined - High	Yes
Tsm	Miocene	Mineta Formation	Conglomerate, limestone, and mudstone	Arizona	3-4	Undetermined - High	Yes
Tsf	Miocene	Popotosa Formation	Fluvial sediments	New Mexico	3-4	Undetermined - High	Yes
Tps	Eocene	Baca Formation	Fluvial sediments	New Mexico, Arizona	4-5	High - Very High Locally	Yes
Tps	Eocene	Cub Mountain Formation	Fluvial sediments	New Mexico	4-5	High - Very High Locally	Yes
Tps	Eocene	Palm Park Formation	Fluvial sediments	New Mexico	4-5	High - Very High Locally	Yes
Tps	Eocene	El Rito Formation	Fluvial sediments	New Mexico	4-5	High - Very High Locally	Yes
Mesozoic Rocks							
K	Cretaceous	Undivided Cretaceous rocks	Sedimentary rocks	Arizona	3	Moderate	Yes
Kmc	Cretaceous	McRae Formation	Fluvial sediments	New Mexico	3	Undetermined	Yes

Table 2. Geological Units and their Associated Paleontological Sensitivity along the SunZia Southwest Transmission Project

Map Unit	Age	Geological Name	Rock Type	Distribution	PFYC	Paleontological Sensitivity	Survey
Kth	Cretaceous	Tres Hermanos Formation	Sandstone	New Mexico	3	Undetermined	Yes
Kbu	Cretaceous	Bisbee Group	Sand and conglomerate	Arizona	2	Low	No
Kmv	Cretaceous	Mesaverde Group	Sandstone and shale	Arizona	3	Moderate	Yes
Kdg	Cretaceous	Dakota Group	Sandstone and shale	Arizona	2	Low	No
Kdm	Cretaceous	Intertongued Dakota-Mancos Sequence	Sandstone, shale, and mudstone	Arizona	2	Low	No
Km	Cretaceous	Mancos Shale	Mudstone	Arizona	2	Low	No
KJs	Cretaceous-Jurassic	Undivided sedimentary rocks	Sedimentary rocks	Arizona	2	Low	No
Trc	Triassic	Chinle Group	Fluvial and lacustrine deposits	Arizona	3	Moderate	Yes
Paleozoic Rocks							
Pat	Permian	Artesia Group	Shale and limestone	New Mexico	2	Low	No
Psa	Permian	San Andres Formation	Limestone and dolomite	New Mexico	2	Low	No
Pg	Permian	Glorieta Sandstone	Sandstone	New Mexico	2	Low	No
Py	Permian	Yeso Formation	Sandstones, siltstones, and dolomite	New Mexico	2	Low	No
Pa	Permian	Abo Formation	Red beds	New Mexico	2	Low	No
Ph	Permian	Hueco Formation	Limestone	New Mexico	2	Low	No
Pb	Permian	Bursum Formation	Shale, arkose, and limestone	New Mexico	2	Low	No
PIP	Permian-Pennsylvanian	Colina Formation	Limestone	New Mexico	3	Moderate	Yes
IP	Pennsylvanian	Undivided Pennsylvanian rocks	Limestone, shale, and other minor rock types	New Mexico	2	Low	No
IPm	Pennsylvanian	Madera Group	Marine sediments	New Mexico	2	Low	No
D	Devonian	Percha Group	Shale	New Mexico	2	Low	No
D	Devonian	Sly Gap Formation	Shale and limestone	New Mexico	2	Low	No
MD	Mississippian-Devonian	Lake Valley Formation	Limestone	New Mexico	2	Low	No
MD	Mississippian-Devonian	Caballero Formation	Limestone and shale	New Mexico	2	Low	No
SOC	Ordovician	McKelligon Formation	Limestone	New Mexico	2	Low	No
SOC	Ordovician	Aleman Dolomite	Dolomite	New Mexico	2	Low	No
SOC	Ordovician	Cutter Dolomite	Dolomite	New Mexico	2	Low	No
Proterozoic Rocks							
Yg	Middle Proterozoic	Granitic rocks	Granite	Arizona	1	Very Low	No
Xms	Proterozoic	Metamorphic rocks	Metamorphic rocks	Arizona	1	Very Low	No

7.4. Tertiary Deposits

Formations: 111 Ranch Beds, Gila Group, St. David Formation, Middle and Lower Santa Fe Group, Quiburis Formation, Mineta Formation, Popotosa Formation, Baca Formation, Cub Mountain Formation, Palm Park Formation, and El Rito Formation

Rock Type: Sandstone, Siltstone, Mudstone, and Conglomerate

Potential: **High** (111 Ranch Beds, Gila Group, St. David Formation, Middle and Lower Santa Fe Group, Baca Formation, Cub Mountain Formation, Palm Park Formation, and El Rito Formation)

Moderate/Undetermined (Quiburis Formation, Mineta Formation, and Popotosa Formation)

Recommendations: In deposits of Tertiary age, the "Prior to Construction" general mitigation measures should be applied to this area of excavation. These measures include worker education and briefing of construction personnel (PA-1) and pre-construction survey of the area(s) of potential impact (PA-2). In areas of high potential, monitoring of construction by a professional paleontologist under permit from the BLM (PA-3) is also required. Field monitoring should be initiated full time, with the provision that, as warranted by field examination of deposits exposed by ground disturbance, the field effort may be reduced to part-time monitoring or spot-checking where feasible as the project proceeds. Large vertebrate fossils will be jacketed and collected. Sediment yielding remains of aquatic or terrestrial vertebrates will be screened in the field to determine the potential for the collection of significant paleontological resources and the efficacy of more detailed sampling. Sediment yielding invertebrate fossils will be screened in the field and sampled only in those cases where significant data are likely to be found. Fossil animal trackways, if not avoided, will be either collected or replicated. If significant fossils are collected, then PA-4 through PA-6 will apply.

7.5. Quaternary Deposits

Formations: River alluvium, piedmont deposits, alluvial deposits, eolian deposits, lacustrine and playa lake deposits, Upper Santa Fe Group, Camp Rice Formation, Sierra Ladrones Formation, and Palomas Formation

Rock Type: Sandstone, mudstone, and unconsolidated sediments

Potential: **High** (Upper Santa Fe Group, Camp Rice Formation, Sierra Ladrones Formation, and Palomas Formation)

Low (River alluvium, piedmont deposits, and alluvial deposits)

Very Low (Eolian, lacustrine, and playa deposits)

Recommendations: In deposits of Quaternary age, the "Prior to Construction" general mitigation measures should be applied to this area of excavation. These measures include worker education and briefing of construction personnel (PA-1) and pre-construction survey of the area(s) of potential impact (PA-2). In areas of high potential, monitoring of construction by a professional paleontologist under permit from the BLM (PA-3) is also required. Field monitoring should be initiated full time, with the provision that, as warranted by field examination of deposits exposed by ground disturbance, the field effort may be reduced to part-time monitoring or spot-checking where feasible as the project proceeds. Large vertebrate fossils will be jacketed and collected. Sediment yielding remains of aquatic or terrestrial vertebrates will be screened in the field to determine the potential for the collection of significant paleontological resources and the efficacy of more detailed sampling. Sediment yielding invertebrate fossils will be screened in the field and sampled only in those cases where significant data are likely to be found. Fossil animal trackways, if not avoided, will be either collected or replicated. If significant fossils are collected, then PA-4 through PA-6 will apply.

8. LITERATURE CITED

Bureau of Land Management (BLM). 1998. General Procedural Guidance for Paleontological Resource Management. H-8270-1.

_____. 2008. Potential Fossil Yield Classification (PFYC) System. Instruction Memorandum No. 2008-009.

_____. 2009. Guidelines for Assessment and Mitigation of Potential Impacts to Paleontological Resources. Instruction Memorandum No. 2009-011-att1.

Department of the Interior (DOI). 2000. Fossils on Federal and Indian Lands: Assessment of Fossil Management on Federal and Indian Lands: Report of the Secretary of the Interior (Bruce Babbitt).

LePage, B.A., and Basinger, J.F. 1993. The Use of Lacquer (nitrocellulose) for the Coating and Preservation of Fossil Leaf Impressions: Journal of Paleontology, v. 67, p. 128-134.

Society of Vertebrate Paleontology (SVP). 1995. Assessment and mitigation of adverse impacts to nonrenewable paleontologic resources: standard guidelines. Society of Vertebrate Paleontology News Bulletin 163:22-27.

Wolf, R.G. 1975. Sampling and Sample Size in Ecological Analysis of Fossil Mammals. Paleobiology 1:195-204.

Appendix D – Other Special Resource Considerations and Mitigation Measures

TABLE OF CONTENTS

1. Introduction D-1
2. Other Special Resource Considerations and Applicable Mitigation D-1
   2.1. Land Use D-1
   2.2. Visual Resources D-3
   2.3. Wild Horses and Burros D-5
   2.4. Noise and Interference D-5

This page intentionally left blank

1. INTRODUCTION

Appendix D of the Plan of Development (POD) provides an overview of other special environmental resource considerations associated with the construction, operation, and maintenance of the Project and mitigation measures to address those considerations. Information included in this appendix addresses existing and planned land use (recreation and grazing), visual resources, wild horses and burros, and noise. Additional information regarding mitigation measures that are applicable to these considerations can also be found in Appendix A – Construction Considerations, and in Appendix F – Right-of-Way Preparation, Rehabilitation, and Monitoring Framework Plan of the POD.

2. OTHER SPECIAL RESOURCE CONSIDERATIONS AND APPLICABLE MITIGATION

2.1. Land Use

Land use impacts include those that would displace, alter, or otherwise physically affect existing or planned land use. Since the transmission line is located primarily on state and Bureau of Land Management (BLM) land and adjacent to existing facilities where feasible, it is anticipated that these impacts will be associated primarily with short-term effects to recreational users during construction, and limited disturbance to grazing activities and grazing allotments as described below. Impacts to land use on private lands are primarily associated with effects to agriculture as addressed in Section 2.1.3.

2.1.1. Recreation

A primary goal of the BLM is to manage developed and undeveloped recreation experiences and opportunities while also protecting other resources. In general, impacts to recreation use that may occur as a result of the construction and operation of the Project include disturbance and/or disruption to recreational activities, especially during construction (off-highway vehicle use, hunting, hiking, and special events, etc.), and the effects associated with increased long-term public/recreational access.

Key mitigation measures designed to minimize impacts to recreation that will be implemented for the project include, but are not limited to, the following:

- All supervisory construction personnel will be instructed on key areas of potential concern identified by the BLM, approved mitigation measures, and established protocols regarding encounters with recreational users during construction.

- Notification and updates will be provided to the BLM regarding construction activity locations and times. The Construction Contractor will work directly with the BLM Authorized Officer to ensure that conflicts with ongoing activities and any special events are avoided or minimized to the degree possible. Signs will be posted in the project area to notify users of the construction activities (see also Appendix A2 – Flagging, Fencing, and Signage Plan and Appendix A3 – Transportation Management Plan).

- All movement of construction vehicles outside of the right-of-way will be restricted to pre-designated access, contractor-acquired access, or public roads.

- All construction sites and access roads shall be clearly marked or flagged at the outer limits prior to the onset of any surface-disturbing activity. All personnel shall be informed that their activities must be confined within the marked or flagged areas.

- In areas determined to be critical by the BLM Authorized Officer, speed limit signs will be clearly posted, and these limits will be adhered to by all construction personnel.

- In selective areas, all new access roads not required for operation and maintenance will be permanently closed using the most effective and least environmentally damaging methods appropriate to that area in accordance with Appendix F of the Final POD. Where access is to be restored, the practices identified in Appendix F of the Final POD will be implemented accordingly. This will limit new or improved accessibility into the area.

- Fences and gates will be repaired or replaced to their original pre-disturbed condition as required by the BLM Authorized Officer if they are damaged or destroyed by construction activities. New temporary and/or permanent gates will be installed only with the permission of the BLM.

2.1.2. Grazing

The Project crosses rangeland suitable for grazing primarily in Pinal, Pima, Graham, Greenlee and Cochise counties in Arizona, and in Socorro, Lincoln, Sierra, Torrance, Luna, Hidalgo, and Grant counties in New Mexico. The BLM has established management guidelines for maintaining these rangelands with respect to grazing, the primary focus being the sustained health of rangelands while managing for multiple use(s) and watershed function and health. In order to support the protection of these rangelands, BLM Field Offices in the aforementioned counties have established grazing allotments (Safford, Las Cruces, Socorro, and Roswell field offices).

Key concerns regarding the potential affects to rangelands and grazing allotments include the potential for disturbance/harassment of livestock or limiting the movement/working of cattle (e.g., fencing, temporary gates, corrals) during construction, construction related disturbance that could result in reduction to viable forage, the spread of noxious weeds, and damage and/or alterations to existing rangeland improvements. In addition to the mitigation measures identified in Appendix A3 – Transportation Management Plan, Appendix A4 – Fire Protection Plan, Appendix B2 – Noxious Weed Management Plan, and Appendix F – Right-of-Way Preparation, Rehabilitation, and Monitoring Framework Plan, several key mitigation measures have been identified to address potential concerns related to grazing that include:

- At least 30 days prior to construction, the Proponent will assist the BLM in the notification of all livestock grazing permit holders affected by the construction of the transmission line. Information provided to each holder will include a general description of project facilities and construction activities, and the anticipated schedule for these activities.

- All supervisory construction personnel will be instructed on current livestock grazing practices and activities in areas potentially affected by construction. Included in this instruction will be policies regarding encounters with livestock or individuals moving or working with livestock, and the protocols and measures to address potential issues associated with grazing.

- Watering facilities (tanks, natural springs and/or developed springs, water lines, wells, etc.) will be avoided to the extent possible. Should watering facilities be damaged or destroyed during construction activities, the Construction Contractor will repair or replace the facilities to their pre-disturbed condition as required by the landowner or BLM Authorized Officer.

- Fences and gates will be repaired or replaced to their original pre-disturbed condition as required by the landowner or BLM Authorized Officer if they are damaged or destroyed by construction activities. New temporary and/or permanent gates will be installed only with the permission of the landowner or the BLM. Temporary gates would be removed following construction completion.

2.1.3. Agriculture

The Project crosses privately owned agricultural areas in Pinal, Pima and Cochise counties in Arizona, and in Socorro, Lincoln, Sierra, Torrance, Luna, Hidalgo, and Grant counties in New Mexico. Adjustments to structure type and placement will be implemented within the right-of-way in cooperation with land owners to avoid pivot irrigation and other sensitive agricultural facilities.

2.2. Visual Resources

Visual impacts associated with the construction of the Project include the effects to the quality of scenic resources, and the views from sensitive land use and recreation areas or sites (including scenic travel routes). The BLM has established Visual Resource Management objectives to assist in the management of public lands in a manner that protects the quality of scenic values and directs the level of acceptable change to the landscape. The BLM encourages the development of linear facilities and rights-of-way such as the Project in designated areas. The visual impacts expected to occur as a result of the Project are based primarily on the introduction of new facilities in areas of higher scenic quality when visible from sensitive viewing locations.

Through the selective location of the Project adjacent to existing facilities (where possible), the use of dulled-metal finish on structures, the use of non-specular conductors, and the implementation of other visual mitigation (see Section 6 of this POD), these impacts will be minimized to a large degree during the siting, engineering, and design of facilities. Additional key mitigation measures and guidelines that will be implemented during the construction of the project that are designed to reduce visual impacts are identified in other portions of the POD and address minimizing new disturbance, controlling erosion, and restoring disturbed areas (see Appendix A3 – Transportation Management Plan, Appendix A6 – Erosion, Dust Control, and Air Quality Plan, Appendix F – Right-of-Way Preparation, Rehabilitation, and Monitoring Framework Plan, and others).

Several of the key mitigation measures identified to address potential concerns related to visual resources include but are not limited to, the following:

- In selective areas, no widening or upgrading of existing access roads as defined and identified in the Final POD (Volume II, Map Sets 1 and 2) will be undertaken in the area of construction and operation, except for repairs necessary to make roads passable without the filing of a project variance and approval by the BLM and the Compliance Inspection Contractor (refer also to Appendix A9 – Environmental Compliance Management Plan of the POD).

- In selective areas, there would be no blading of new access roads in the area of construction and operation. Existing crossings would be utilized at perennial streams, National Recreational Trails, and irrigation channels. Off-road or cross-country access routes would be used for construction and maintenance. This would minimize ground disturbance impacts. These access routes must be flagged with an easily seen marker and the route must be approved in advance of use by the authorized officer.

- The alignment of any new access roads or overland routes that may be identified during construction should follow the designated area's landform contours where possible, providing that such alignment does not additionally impact resource values.

- In selective areas, all new access roads not required for operation and maintenance would be permanently closed. New access roads not required for operation and maintenance of the Project and/or other planned facilities will be closed using the most effective and least environmentally damaging methods appropriate to that area in accordance with Appendix F of the Final POD. Where access is to be restored, the practices identified in Appendix F of the Final POD will be implemented accordingly. This would limit new or improved accessibility into the area.

- All movement of construction vehicles outside of the right-of-way will be restricted to pre-designated access, contractor-acquired access, or public roads.

- All construction sites and access roads shall be clearly marked or flagged at the outer limits, prior to the onset of any surface-disturbing activity. All personnel shall be informed that their activities must be confined within the marked or flagged areas.

- In construction areas, as specified by the BLM, surface restoration will occur. The method of restoration will normally consist of returning disturbed areas back to their natural contour, reseeding, and the installation of erosion control measures (to the degree possible, and if required).

- To minimize disturbance to timber resources and reduce visual contrast in selective areas, clearing of trees in and adjacent to the right-of-way will be minimized to the extent practicable to satisfy conductor-clearance requirements (National Electric Safety Code and 10 years of timber growth). Trees and other vegetation will be removed selectively (e.g., edge feathering) to blend the edge of the right-of-way into adjacent vegetation patterns, as practicable and appropriate.

2.3. Wild Horses and Burros

Since 1971, the BLM has been managing free-roaming horses and burros on public lands in accordance with the Wild Free-Roaming Horse and Burro Act. This Act mandates that wild and free-roaming horses and burros be protected from unauthorized capture, branding, harassment, or death, and furthermore that these animals be considered as an integral part of the natural systems based on their distribution.

Although the Project does not cross any designated Herd Management Areas (HMA), the Bordo Atravesado HMA in New Mexico is in close proximity to the Project alignment and the potential exists for interaction with wild horses and burros. Key concerns regarding the potential affects to wild horses are related primarily to the potential for harassment or disturbance based on construction activities associated with the project, and activities during construction that could result in degradation of habitat, or limiting the free-roaming nature of herds (fencing, etc.). In addition to the mitigation measures identified in other portions of the POD that address minimizing new disturbance (Appendix A3 – Transportation Management Plan), and right-of-way, rehabilitation, and restoration practices (Appendix F – Right-of-Way Preparation, Rehabilitation, and Monitoring Framework Plan), several key mitigation measures have been identified to address potential concerns with wild horses that include the following:

- Prior to construction, all supervisory construction personnel will be instructed on the protection of wild horses and the policies regarding encounters with wild horses.
- Watering facilities (tanks, natural springs and/or developed springs, water lines, wells, etc.) will be repaired or replaced if they are damaged or destroyed by the Construction Contractor to their predisturbed condition as required by the BLM Authorized Officer.
- Fences and gates will be repaired or replaced to their predisturbed condition as required by the BLM Authorized Officer if they are damaged or destroyed by construction activities. New temporary and/or permanent gates that could limit free-roaming herd activities will be installed only with the permission of the BLM.
- Appropriate signage, designating the potential presence of wild horses will be posted along major construction access roads, at intervals determined with the BLM Authorized Officer in each appropriate FO.

2.4. Noise and Interference

Some increased level of noise will result from the construction and maintenance of the transmission line. During construction, noise will be generated from equipment used for grading (e.g., access roads, staging areas, and towers sites), tower erection activities, helicopters, vehicle movement along the corridor, and blasting. Additionally, noise will be generated during the rehabilitation phase of the project due to vehicle use and re-vegetation activities, road reclamation, and landform contouring along the right-of-way. These noise levels will be temporary in nature and be primarily isolated to areas of construction. Some low levels of residual audible noise may result from the conductors, a phenomenon referred to as corona-generated noise.

Potential noise issues may prove disruptive, or a nuisance to wildlife. Mitigation measures designed to restrict the timing of construction in key areas are presented in Appendix B1 – Biological Resources Protection Plan to address these concerns. In addition, noise generated concerns related to blasting (where needed) are discussed in Appendix A5 – Blasting Plan Methodology. While primarily rural in location, other potential mitigation measures to be implemented on behalf of local residents in the immediate vicinity of the project will include the following:

- The Proponent will continue to monitor industry studies performed to determine the effects of audible noise in order to ascertain whether these effects are significant.

- The Proponent will respond to complaints of line-generated radio or television interference by investigating the complaints and implementing appropriate mitigation measures. The transmission line will be patrolled on a regular basis so that damaged insulators or other line materials that could cause interference are repaired or replaced.

Appendix E – Stormwater Pollution and Prevention Plan Methodology

TABLE OF CONTENTS

1. Introduction E-1
    1.1. Purpose E-1
2. Notification Requirements and Implementation E-2
3. Project Modifications E-2
4. Mitigation, Maintenance, Inspection, Repair, and Monitoring E-3
    4.1. Specific Mitigation Measures and Methods E-3
    4.2. Maintenance, Inspection, and Repair E-3
    4.3. Monitoring E-4
5. Training E-4
6. Post-Construction Stormwater Management E-4

This page intentionally left blank

1. INTRODUCTION

The Environmental Protection Agency (EPA) currently allows discharges of stormwater associated with construction activities for projects such as the Project if the activity is compliant with the National Pollutant Discharge Elimination System (NPDES) General Permit.

In accordance with this regulation, the Arizona Department of Environmental Quality (ADEQ) has issued a General Construction Stormwater Permit for the State of Arizona (AZG2008-001). Operator(s) of construction sites that involve one or more acres of disturbance must submit a Notice of Intent (NOI) to obtain coverage under the General Permit, which requires that a Stormwater Pollution Prevention Plan (SWPPP) be prepared for the projects in accordance with the AZPDES. The construction contractor will be responsible for submitting an NOI, preparing a SWPPP and implementing the SWPPP throughout the duration of construction.

Currently, the State of New Mexico does not have National Pollutant Discharge Elimination System (NPDES) permitting authority. No Best Management Practices (BMP) manual or numeric requirements for stormwater pollutant removal have been established at the state level, but regional and municipal regulations are in place. The Environmental Protection Agency (Region 6) administers all NPDES permits in the state of New Mexico, and issues general permits for construction sites.

1.1. Purpose

The purpose of a SWPPP for the Project is to identify and implement stormwater pollution prevention measures to reduce the quantity of impacted runoff and to deal with runoff in a manner that minimizes environmental impacts during construction, operation, and maintenance of the Project.

A SWPPP is needed to minimize the volume of contaminated runoff, including sediment runoff, and to implement mitigation measures in a manner that minimizes environmental impacts. Temporary stabilization methods (e.g., silt-fences, straw bales, etc.) are not guaranteed or fail-safe measures without regular maintenance and field inspection throughout the winter and runoff season. In addition to conventional methods of erosion control, there are numerous new and improved products and the Construction Contractor is encouraged to review these progressive or improved materials in the development and implementation of a SWPPP.

The proper implementation of mitigation measures associated with a SWPPP is imperative during all construction activities, and these activities will be conducted in an environmentally-sensitive and responsible manner in order that no discharge of sediment or contaminants may be conveyed as either direct or indirect discharge to wetlands, Waters of the United States, Waters of the State of Arizona, or Waters of the State of New Mexico.

Development, implementation, and maintenance of the SWPPP will provide the contractor with the framework for reducing soil erosion and minimizing pollutants in stormwater during construction. The SWPPP will:

- Define the characteristics of the site and the type of construction that will be occurring

- Describe the practices that will be implemented to control erosion and the release of pollutants in stormwater
- Create an implementation schedule to ensure that the practices described in the SWPPP are in fact implemented and to evaluate the plan's effectiveness in reducing erosion, sediment, and pollutant levels in stormwater discharge from the site
- Describe the final stabilization/termination design to minimize erosion and prevent stormwater impacts after construction is complete

2. NOTIFICATION REQUIREMENTS AND IMPLEMENTATION

Before construction begins, the Construction Contractor will be responsible for developing a SWPPP, and obtaining coverage under the NPDES General Permit by filing a Notice of Intent (NOI) and appropriate fee with the ADEQ/NMED in accordance with NOI instructions. The Construction Contractor will be responsible for implementing a site-specific SWPPP, and is required to perform routine inspections over the duration of construction activities.

The primary intent of the erosion and sediment control measures (often referred to as BMP) is to control and minimize erosion at the source. For the Project, the main source of potential stormwater contamination will be erosion of soils from the construction activities. It will be the responsibility of the Construction Contractor to implement erosion control measures where necessary, in order to minimize pollutants in stormwater and to keep the project in compliance with ADEQ/NMED regulations.

A copy of the SWPPP shall remain with the Construction Manager on the construction site or at a staging area(s), and be readily available while the transmission line and substations are under construction, from the start of construction activities until completion of restoration for the project.

The Construction Contractor must retain a set of construction site maps (see Volume II of the Plan of Development [POD]) for the duration of the project, and for 3 years after the Notice of Termination, that delineate the following items:

- areas of soil disturbance that have been stabilized
- areas to be graded along with a time schedule
- areas of potential soil erosion where control practices will be implemented
- the type of control practices and time schedule for implementation
- locations of any post-construction projects
- copies of all inspections performed over the duration of the project

3. PROJECT MODIFICATIONS

The Construction Contractor is responsible for maintaining an up-to-date SWPPP and shall amend the SWPPP whenever there is a change in construction or operations that may affect the discharge of pollutants to surface waters or groundwater. The SWPPP shall also be amended if it is in violation of the General Permit or has not achieved the general objective of eliminating pollutants in storm water discharges. The SWPPP shall be amended and implemented in a timely

manner, but in no case more than 14 days after it has been determined that the SWPPP is inadequate. All amendments should be dated and directly attached to the SWPPP. ADEQ/NMED may require the discharger to amend the SWPPP.

4. MITIGATION, MAINTENANCE, INSPECTION, REPAIR, AND MONITORING

The Construction Contractor shall at all times properly operate and maintain any facilities and systems of treatment and control (and related appurtenances). Proper operation and maintenance also include appropriate quality assurance procedures. Proper operation and maintenance may require the operation of backup or auxiliary facilities or similar systems if construction takes place in an above average precipitation year.

4.1. Specific Mitigation Measures and Methods

Mitigation and Protection measures to assure construction activities comply with state and EPA requirements for stormwater management to be incorporated into the SWPPP include:

- One or more responsible persons will be designated to manage stormwater issues, conduct the required stormwater inspections, and maintain the appropriate records to document compliance with the terms of the NPDES permit.
- The SWPPP will identify areas with critical erosion conditions that may require special construction activities or additional industry standards to minimize soil erosion.
- Migration of construction-related sediment to all adjacent surface waterbodies will be prevented.
- Stormwater industry standards will be maintained on all disturbed lands during construction activities as described in the SWPPP.
- Approved sediment and erosion control industry standards will be installed and maintained until disturbed areas meet final stabilization criteria.
- Temporary industry standards will be used to control erosion and sediment at staging areas (equipment storage yards, fly yards, laydown areas) and substations
- The construction schedule may be modified to minimize construction activities in rainsoaked or muddy conditions. Existing roads and trails would be used for travel to the maximum extent feasible unless otherwise authorized. During wet road conditions, any ruts deeper than 5 inches remaining on the roads from the Project would be repaired at the Authorized officer’s discretion.
- Upon completion of construction, permanent erosion and sediment industry standards will be installed along the transmission line within the right-of-way, at substations, and at related facilities in accordance with the SWPPP.
- In areas of drought susceptible soils, the soil surfaces will be mulched and stabilized to minimize wind erosion and to conserve soil moisture.

4.2. Maintenance, Inspection, and Repair

The Construction Contractor will be required to conduct routine maintenance and emergency repair on any structural controls, including the maintenance of erosion and sediment control measures and any required subsequent reporting. As part of the SWPPP, the Construction Contractor will be required to develop an inspection schedule and conduct routine inspections to

identify conditions that could lead to discharges of chemicals or contact of stormwater with storm drainages or surface waters. Schedules will be established for regular inspections of equipment and areas. Inspections of the construction site shall occur within 24 hours following any rainfall event of 0.5 inches or greater to identify areas contributing to a stormwater discharge and to evaluate whether BMPs are in place and functioning properly. For storm events with extended durations, observations shall be performed every 24 hours. During inspections, the Construction Contractor will also determine if the BMPs identified in the SWPPP are adequate and whether additional control practices are needed. All monitoring and inspection records which have been produced in association with this SWPPP will be retained for a period of at least 3 years.

4.3. Monitoring

To monitor the mitigation's effectiveness, and to evaluate whether additional mitigation measures are required, a monitoring program and reporting system will be followed. As part of erosion control of the site, weather monitoring should be conducted to prepare for precipitation events. It is recommended that weather forecasts be checked at least every week.

5. TRAINING

The Construction Contractor will be responsible for the SWPPP implementation, amendments, and revisions. On-site construction personnel will be responsible for installation and maintenance of on-site mitigation measures.

The Construction Contractor will be responsible for familiarizing their personnel with the information contained within the SWPPP. Training meetings will need to be held for new personnel who join the project after the initial training has been provided. The purpose of these meetings will be to review the proper installation methods and maintenance of all erosion control measures to be used for the project. The monitoring/inspection program and all required maintenance and repair will be conducted by trained personnel.

6. POST-CONSTRUCTION STORMWATER MANAGEMENT

Mitigation measures used to reduce pollutants in stormwater discharges after all construction phases have been completed at the site will take into account local post-construction stormwater management requirements, policies, and guidelines, as well as site-specific and seasonal conditions. Post-construction mitigation measures will be assessed during future line maintenance. During line maintenance, any areas disturbed by the line installation that are observed to be eroding sediment into drainages will be assessed for the appropriate permanent mitigation measure to control sediment movement off the disturbed area. Disturbed areas will also be restored per Appendix F – Right-of-Way Preparation, Reclamation, and Monitoring Framework Plan.

Appendix F – Right-of-Way Preparation, Reclamation, and Monitoring Framework Plan

TABLE OF CONTENTS

1. Introduction F-1
   1.1. Organization of the Plan F-1
2. Regulatory Requirements and Authorities F-2
3. Purpose F-2
   3.1. Responsible Parties F-3
4. Overview of Existing Environments F-3
   4.1. Conifer/Woodland Communities F-4
   4.2. Shrub/Scrubland Communities F-5
   4.3. Grassland/Savannah Communities F-6
   4.4. Riparian/Wetland Communities F-7
   4.5. Special Conditions F-8
5. Reclamation Plan Methodology F-9
   5.1. Identification of Reclamation Zones F-9
   5.2. Identification of Reclamation Levels F-15
6. Reclamation Plan F-19
   6.1. Right-of-Way Preparation and Pre-Construction Actions F-20
   6.2. Post-Construction Reclamation Actions F-28
   6.3. Modifications and Field Changes F-31
7. Monitoring F-31
   7.1. Reclamation Goals and Success Standards F-32
   7.2. Monitoring Practices (Methodology) F-34
   7.3. Data Collection F-36
   7.4. Adaptive Management and Site Release F-38

LIST OF TABLES

Table F-1. Reclamation Zones Identification Matrix F-10
Table F-2. Disturbance Characteristics of the Project F-16
Table F-3. Reclamation Levels F-18
Table F-4. Construction Component – Reclamation Levels F-19
Table F-5. Reclamation Action Identification Table F-24
Table F-6. Reclamation Success Requirements, Relative to Control Plot Conditions [NOTE: Specific Percentages to be Developed by the BLM] F-33
Table F-7. Reclamation Monitoring Requirements F-35

LIST OF FIGURES

Figure F-1. Reclamation Zones and Biotic Communities [To Be Provided Upon Selection Of Final Route] F-13

This page intentionally left blank

1. INTRODUCTION

This Right-of-Way Preparation, Reclamation, and Monitoring Framework Plan (Plan) has been developed based on the principles and procedures established by the Bureau of Land Management (BLM), which were designed specifically to include high-voltage transmission projects. This Plan is applicable to the construction of transmission structures, permanent and temporary access roads, staging areas, tension and pulling stages, and other extra work areas associated with the Project on lands managed by federal and cooperating agencies (e.g., states of Arizona and New Mexico). Requirements for preparation, reclamation, and monitoring on private lands will be negotiated between the Proponent and the affected landowner. The intent of this Plan is to prevent unnecessary degradation of the environment during construction, restore temporary use areas, and reclaim disturbed areas such that these areas are ecologically functional and visually compatible with the surrounding environment to the greatest extent practicable.

1.1. Organization of the Plan

In order to facilitate the review and understanding of this Plan, the contents have been organized into the following eight major sections:

Section 1 Introduction – Section 1 introduces the Plan and provides a general overview of the organization and its contents.

Section 2 Regulatory Requirements and Authorities – Section 2 presents a listing and description of applicable regulatory requirements and agencies having authority with regards to the Plan.

Section 3 Purpose – Section 3 provides an overview of the purpose of the Plan, BLM objectives for reclamation practices, and Project Proponent and Construction Contractor responsibilities.

Section 4 Overview of Existing Environments – Section 4 presents a brief description of the vegetation communities that will be affected during construction and post-construction activities.

Section 5 Reclamation Plan Methodology – Section 5 presents the process used to develop the levels of reclamation associated with the Plan.

Section 6 Reclamation Plan – Section 6 outlines the right-of-way preparation, pre- and post-construction actions that will be implemented by the Project Proponent and/or Construction Contractor.

Section 7 Reclamation Success Standard, Monitoring, and Maintenance – Section 7 describes the monitoring procedures that will be implemented for the Project.

Section 8 References – Section 8 lists the specific information that has been used in the development of the Plan.

Attachment A – BLM-approved Seed Mixtures and Methods

2. REGULATORY REQUIREMENTS AND AUTHORITIES

Authority for the reclamation practices defined in this plan is provided under the following regulations, Resource Management Plans (RMP), initiatives, and general guidelines:

BLM Terms and Conditions of Right-of-Way Grants and Temporary Use Permits 43 CFR 2881.2

> *"The authorized officer shall impose stipulations which shall include, but not be limited to requirements for restoration, revegetation, and curtailment of erosion of the surface of the land [and] requirements designed to control or prevent damage to the environment (including damage to fish and wildlife habitat)..."*

Federal Land Policy and Management Act Sec. 101(a)(8)

> *Requires that "public lands be managed in a manner that will protect the quality of scientific, scenic, historical, ecological, environmental, air and atmospheric, water resources, and archeological values; that, where appropriate, will preserve and protect certain public lands in their natural condition..."*

Endangered Species Act of 1973, as amended Section 7(a)(2)

> *Requires that federal agencies ensure that any authorized action "will not result in the adverse modification" of critical habitat.*

Socorro District RMP

> *States that for Surface Disturbing Activities "The project proponent will include a restoration plan for habitat of special status species…(under consultation with the BLM)"*

Mimbres District RMP

> *"Restoration and maintenance of the limited but highly productive riparian and arroyo habitats will be understood."*

No reclamation specific regulatory requirements have been identified in relevant Arizona RMPs and other New Mexico RMP's that are not listed.

3. PURPOSE

The purpose of this Plan is to describe and recommend construction and reclamation treatment actions that will meet BLM goals and objectives under the applicable RMPs, Guidelines, and Initiatives described above for land health standards, to recover habitat for federally listed and sensitive species, and to provide protocols and/or requirements for implementing and monitoring required reclamation.

Important actions in mitigating the effects associated with the Project include (1) minimizing to the greatest degree practicable, the effects associated with right-of-way preparation and the construction of facilities, and (2) stabilizing temporarily disturbed construction areas resulting

from construction to an acceptable condition in order to speed up natural recovery. The procedures outlined in this Plan will assist in restoring plant communities to near pre-construction conditions and associated wildlife habitat and range, preventing substantial increases in noxious weeds in the Project area, minimizing project-related soil erosion, and reducing visual impacts of sensitive areas caused by construction activities. To achieve these goals, this Plan outlines actions to be applied during the pre-construction and post-construction phases of the Project.

3.1. Responsible Parties

The Proponent will have the overall responsibility of directing and monitoring the reclamation efforts for the Project. The Construction Contractor may retain the services of a Reclamation Subcontractor who specializes in reclamation to implement the protocols identified in this Plan during and following construction. The BLM must approve either the Construction Contractor or the Reclamation Subcontractor to implement the actions contained in this Plan. It is anticipated that post-construction reclamation monitoring would occur concurrent with the practices as outlined in the Appendix B2 – Noxious Weed Management Plan (as appropriate).

Additional linear facilities currently exist within, or have been proposed adjacent to the right-of-way to be occupied by the Project (see Cumulative Effects discussion of the Project DEIS). Where feasible, consolidation of access (i.e., utilizing existing access from other facilities or retaining Project construction access for additional future facilities use, thereby reducing overall new road construction) with additional linear facilities may result in an overall reduction of access-related concerns and/or impacts on the environmental resources within and near the right-of-way. Prior to issuance of a right-of-way grant for the Project, the BLM, in coordination with the Proponent, will determine which of the newly constructed access roads will be closed, reclaimed, or retained for operation and maintenance activity. New access roads not required for operation and maintenance of the Project and/or other planned facilities may be closed using the most effective and least environmentally damaging methods appropriate to that area. Where access is to be closed, the practices identified in the Final POD will be implemented accordingly.

4. OVERVIEW OF EXISTING ENVIRONMENTS

Reclamation actions will be specific to the setting of the Project, and the vegetation communities potentially affected during pre-construction and post-construction activities. In particular, seeding and alternative seeding actions require information to develop appropriate seed mixes that will incorporate the dominant plant species of the existing vegetation communities, where applicable. In addition, vegetation clearing practices may vary based on dominant plant communities (*e.g.*, cacti, piñon-juniper, etc.).

Vegetation data for the Project area were obtained for New Mexico from the New Mexico Resource Geographic Information System (University of New Mexico 2010), and for Arizona from Arizona Land Resource Information System (ALRIS 2010). The vegetation-based biome descriptions for the study corridor given below are primarily from Brown (1982a). Because of the generally small scale of most riparian habitats occurring within the study corridor these areas were not mapped, but have been included in the resource review and specific reclamation treatments.

The Brown, Lowe, and Pase system, as developed and described for the Southwest, is used to identify and describe plant communities in the Project area. The system is based on natural criteria and recognizes the limiting effects of moisture and temperature minima, as well as evolutionary origin on the structure and composition of plant and animal communities. As a hierarchical system that can be used at various levels of detail, the system is intended to facilitate habitat delineation, biotic inventory and assessment, resource planning, and other biological activities (Brown et al. 1998).

The proposed alignment for the Project is located primarily in the Southern part of the Basin and Range province with portions of the project in New Mexico being located in the southern portion of the Colorado Plateau province. Biological communities of the Basin and Range area consist of XXXX biomes and the Colorado Plateau consists of XXXX biomes. Biomes are major vegetation formations, such as desertscrub or woodland vegetation, centered in a geographic area such as the Sonoran Desert. Riparian/Wetland biomes include communities that are periodically, seasonally, or continually submerged and are composed of emergent plants and life-forms which differ from the immediately adjacent upland vegetation (Brown et al. 1998).

There are 11 biomes within the Project area. For the purposes of this Plan, these biomes are further aggregated into four biotic communities sharing similar vegetation composition and community characteristics. While species composition will vary within each biome, similar types of vegetation will likely be found within the aggregated biotic community that will support similar reclamation actions. For example, vertical mulch is a reclamation technique applicable in the conifer/woodland and shrub-land areas due to the abundance of woody and shrubby material, but would not be applicable to the grassland areas. These biotic communities will be illustrated in the Final POD Figure F-1 and will be identified in the Final POD Volume II Map Set 2, and should be directly referenced during right-of-way preparation, reclamation, and monitoring activities.

4.1. Conifer/Woodland Communities

4.1.1. Great Basin Conifer Woodland

Outside of the Great Basin physiographic province there is a broad band of vegetative communities across the southern Rockies that have origins in the Great Basin proper. Great Basin Conifer Woodland is generally found above grasslands or chaparral, where fire frequency is low but precipitation is insufficient to support development of montane conifer forests. This plant community is typified by the dominance of two small evergreen trees: junipers (*Juniperus* spp.) and piñon pines (*Pinus edulis* and *P. monophylla*), with an understory of mixed shrubs, grasses, and herbaceous plants. Some cacti, particularly *Opuntia* species, also occur (Brown 1982e).

4.1.2. Petran Montane Conifer Forest and Petran Subalpine Conifer Forest

Within the Project study area, the Petran Montane Conifer plant community only occurs in small areas atop the Santa Catalina, Rincon, Galiuro, and Pinaleño Mountains in Arizona, and in the Organ Mountains east of Las Cruces, New Mexico. Montane conifer forest in the region are typically dominated by either ponderosa pine (*Pinus ponderosa*), typically in the lower reaches,

or mixed conifer forest consisting of white fir (*Abies concolor*), aspen (*Populus tremuloides*) and limber pine (*Pinus flexilis*) at cooler, middle and higher elevations. Lower portions of these forests may be locally dominated by Gambel oak (*Quercus gambelii*) or New Mexican locust (*Robinia neomexicana*) (Pase and Brown 1982b). The Petran Subalpine Conifer Forest is located in a small area at the top of the Pinaleño Mountains and contains similar plants with more dominant occurrences of Engelmann spruce (*Picea engelmannii*).

4.2. Shrub/Scrubland Communities

4.2.1. Sonoran Desertscrub

The Sonoran Desertscrub biome is divided into two major subdivisions, the Lower Colorado River Valley subdivision and the Arizona Upland subdivision. The subdivisions are primarily separated by a variation in the total effective annual precipitation, and are a byproduct of the bimodal precipitation regime previously mentioned. Soil types are the primary determinant where the subdivisions meet and overlap in south-central Arizona, with the Arizona Upland subdivision restricted to rockier slopes, foothills, and desert mountains. Sonoran Desertscrub is typically bounded on the east by either Chihuahuan Desertscrub or semidesert grassland habitats. In the Project area, this occurs respectively in the southern and northern segments of the San Pedro Valley. With milder winters and additional rainfall, the region to the south of the Sonoran Desert merges into Sinaloan Thornscrub habitat, south of the United States-Mexican border. To the west, in southern California and northwest Arizona, the Sonoran Desert abuts the Mohave Desertscrub biome. Sonoran Desertscrub north of the Project area (near Superior, Arizona) is bounded by areas of interior chaparral, but in the Project area most Sonoran Desertscrub abuts semidesert grassland. The presence of a variety of xeric-adapted sclerophyllous tree species and many species of cacti and other succulents distinguishes the Sonoran Desert from less diverse, shrub-dominated North American desert biomes (Turner 1982).

4.2.1.1. Lower Colorado River Valley Subdivision

The Lower Colorado River Valley subdivision is the warmer and drier of the two subdivisions of the Sonoran Desertscrub biome. It occurs at lower elevations and typically farther west, where regional geology limits annual precipitation. Precipitation falls mainly during winter from Pacific storms; moisture from monsoonal systems that occur in summer contribute only small amounts to total annual precipitation. Precipitation from monsoon events lessens in areas farther to the north and west from the sources of monsoonal moisture; the Gulf of Mexico and the Gulf of California. Because of the low annual precipitation, vegetation in the Lower Colorado River Valley subdivision is typically open and less diverse, with plant communities often dominated by creosote bush (*Larrea tridentata*) and burrobush (*Ambrosia dumosa*), or they may occur as essential monocultures of creosote bush over very large areas. Cacti are an important group within this subdivision, but do not dominate as they do in the Arizona Upland subdivision, where they are an important element in plant communities (Turner 1982).

4.2.1.2. Arizona Upland Subdivision

The Arizona Upland subdivision is a mix of desertscrub and subtropical thornscrub elements. Precipitation is higher than in other North American desert communities, with a notably bimodal

pattern. Approximately half of the precipitation occurs in winter, supporting diverse spring annuals; and approximately half falls in a summer monsoon period as heavy, localized thunderstorms. The Arizona Upland subdivision occurs from higher-elevation valley floors typically associated with Sky Island mountain ranges, up to the elevation limit where winter freezes exclude many succulent species. This plant community is best developed on upper bajadas and low montane foothills where proximity to steep, often high mountains results in increased annual precipitation. Small trees or shrubs are a dominant vegetative component, with a high diversity of Fabaceae, including yellow paloverde (*Parkinsonia microphylla*), blue paloverde (*P. florida*), several mesquites (*Prosopis* spp.), desert ironwood (*Olneya tesota*), catclaw acacia (*Acacia greggii*), and whitethorn acacia (*A. constricta*). Cactus diversity is relatively high, and cacti are often dominant or co-dominant. Prickly pears (*Opuntia* spp.) and chollas (*Cylindropuntia* spp.) may reach very high diversity. Common small or clumped cacti include several species of hedgehog cactus (*Echinocereus* spp.) and pincushion cactus (*Mammillaria* spp.). Larger cacti include the columnar saguaro (*Carnegiea gigantea*) and barrel cacti (*Ferocactus* spp.). Jojoba (*Simmondsia chinensis*), creosote bush, ocotillo (*Fouquieria splendens*), and numerous other shrubs are also present (Turner 1982).

4.2.2. Chihuahuan Desertscrub

Dominant shrubs in finer soils include creosote bush, American tarwort (*Flourensia cernua*), and viscid acacia (*Acacia neovernicosa*). Rocky uplands and bajadas are dominated by species of *Agave*, *Yucca*, *Nolina*, and other succulent shrubs. Some prickly pear species are the most common large cacti, but the diversity of small clumped cacti is higher in this plant community than any other in North America. Some major cactus genera are *Echinocereus*, *Mammillaria*, *Coryphantha*, and *Escobaria*. Perennial herbaceous plants may be a significant component of the community and some annuals may occur in response to sufficient winter rains. Precipitation in Chihuahuan Desertscrub is largely from summer thunderstorms, although occasionally strong Pacific winter storms will reach the region. Chihuahuan Desertscrub gradually intergrades into Semidesert Grassland with increasing elevation or rainfall (Brown 1982b).

4.2.3. Interior Chaparral

Chaparral communities are dominated by evergreen shrubs, which may reach 90 percent ground cover. High shrub cover prevents the establishment of a significant understory of grasses or herbaceous plants, except in early-successional stages and rocky, open patches. Arizona Interior Chaparral is dominated by Sonoran scrub oak (*Quercus turbinella*), along with manzanitas (*Arctostaphylos* spp.), deerbrush (*Ceanothus* spp.), and many others. Interior Chaparral is subject to regular wildfires, and may depend on fire to prevent conversion to forests at the upper elevation limit of the community. Some shrub species depend on fire for germination, and nearly all regenerate post-fire from the root crown (Pase and Brown 1982a).

4.3. <u>Grassland/Savannah Communities</u>

4.3.1. Semidesert Grassland

Semidesert grasslands, while dominated by grasses, have high shrub diversity and in areas with fire suppression or heavy grazing often convert to desertscrub. Precipitation is slightly greater in

summer, and summer rainfall supports the majority of grass growth. Cacti may be common and include several species of cholla and prickly pear as occasional dominant plant species, particularly where livestock grazing is heavy. Typical grasses may include species of grama (*Bouteloua* spp.), three-awn (*Aristida* spp.), tobosa grass (*Pleuraphis mutica*), and others. Mesquite is generally the most dominant shrub species, with creosote bush, numerous *Yucca* species and the related sotol (*Dasylirion wheeleri*) and beargrasses (*Nolina* spp.), ocotillo, and several other shrubs common in places (Brown 1982c).

4.3.2. Plains and Great Basin Grassland

The western edge of the Plains biome within the study area is largely a shortgrass prairie plant association. Dominant plant species are grasses including several gramas (*Bouteloua* spp.), Galleta grasses (*Pleuraphis jamesi* and *P. rigida*), Plains lovegrass (*Eragrostis intermedia*), and numerous others. Shrub invasion may occur with fire suppression or grazing pressure; chollas and some prickly pears can be abundant as well (Brown 1982d).

4.4. <u>Riparian/Wetland Communities</u>

4.4.1. Interior and Sonoran Riparian Woodland

Riparian woodlands are dominated by trees and shrubs dependent on surface water or shallow groundwater, and generally exist as narrow bands along major streams and rivers. The majority of the tree species are (at least regionally) riparian obligates, and do not occur in upland habitats within arid Southwestern biomes. The high productivity and cooler, more humid microclimate within riparian woodlands supports numerous herbaceous plant and wildlife species generally restricted to riparian zones as well.

Riparian plant communities do not change as rapidly with elevation as upland plant communities, as the woodlands provide thermal buffering not present elsewhere and competition for water is generally not a limiting factor. The shift between Interior and Sonoran Riparian Woodland is driven by elevation, although there is much overlap of the vegetative community. Interior Riparian communities are generally found above 3,900 feet elevation, often in montane canyons, while Sonoran Riparian communities surround valley and lowland rivers and streams.

Dominant tree species common to both communities include Fremont cottonwood (*Populus fremontii*), Goodding's willow (*Salix gooddingii*), and velvet mesquite (*Prosopis velutina*). Large stands of velvet mesquite in particular are important components of lowland woodlands in the Southwest. Increasing elevation allows the occurrence of netleaf hackberry (*Celtis laevigata*), Arizona walnut (*Juglans major*), Arizona sycamore (*Platanus wrightii*), Arizona alder (*Alnus oblongifolia*), velvet ash (*Fraxinus velutina*), and others.

4.4.2. Interior and Sonoran Riparian Scrubland

This community occurs as a transition between riparian woodlands and xeroriparian washes, and is present in areas where either disturbance is too great or water may be insufficient to support development of mature forest. Goodding willow is one of the larger tree species, and several

species of mesquite, desert willow (*Chilopsis linearis*), paloverdes (*Parkinsonia* spp.), catclaw acacia, and other native trees and shrubs are present.

4.4.3. Plains Riparian Wetlands

The Rio Grande and associated tributaries within the study area may support Plains Riparian Wetlands. Tree species in this habitat within the study area include Rio Grande cottonwood (*Populus deltoides wislizeni*), narrowleaf cottonwood (*P. angustifolia*), peachleaf willow (*Salix amygdaloides*), and narrowleaf willow (*S. exigua*)

4.4.4. Xeroriparian Scrubland

Numerous minor, ephemeral washes, found in Sonoran and Chihuahuan Desertscrub into semidesert grassland, do not represent entirely separate plant communities, as there is strong species overlap with surrounding uplands. However, they do represent shifts in species dominance to areas of higher density and productivity of shrub species, which may also be present away from washes. Xeroriparian scrubland varies in its species components regionally and with elevation, but plant density and stature are similar in this biome. Such vegetation is too dense to be considered either desertscrub or strand habitats, and is reasonably qualified as a distinct biome (Minckley and Brown 1982). The increased shelter and food availability in this habitat results in a habitat disproportionately richer than adjacent uplands, and of importance to most wildlife species that are present.

4.5. <u>Special Conditions</u>

4.5.1. Agriculture

Portions of the Project cross active agricultural lands, particularly in the Rio Grande Valley floodplain and the western terminus of the project at the Pinal Central Substation. Reclamation techniques for these lands will be decided on a case-by-case basis as determined by agreements between the Proponent and private landowners. Agricultural areas that are crossed by the Project will be identified in Volume 2, Map Set 2 of the Final POD.

4.5.2. Playa

Another category of vegetation communities, although not identified by Brown and Lowe as a unique vegetation community, is playas (or dry lake beds), one of which is crossed by the Project. Playas are topographic depressions, typically the lowest part of an intermountain basin or bolson, that function as ephemeral ponds frequently flooded by run-off from adjacent highlands or local rainfall. The surface is generally flat, with mud flats and locally small dunes. Playa vegetation communities are characterized by bands or zones of vegetation similar to other riparian areas. Plant composition will vary due to local variances in hydrology, soils, and geographic location. The largest basin crossed by the Project is the Lordsburg Playa, between Lordsburg, New Mexico and Willcox, Arizona. Dry most of the year, a playa can attract a variety of water birds during the rainy season, when runoff from adjacent uplands fills the basin and creates favorable conditions for annual forbs, grasses, and herbaceous perennials.

5. RECLAMATION PLAN METHODOLOGY

This section of the Plan describes the process used to identify reclamation actions that will be required for the Project. Because it was designed specifically for high-voltage transmission projects, the methodology utilized for this Project is based in part on the *Restoration Plan for Energy Projects in the Las Vegas Field Office BLM, 2001* to identify the appropriate reclamation levels and actions for the Project; however, actions specific to the Project area have been modified to meet the resource requirements and unique conditions of this Project.

5.1. Identification of Reclamation Zones

As stated previously, the purpose of this Plan is to describe and recommend reclamation treatment actions that will meet BLM goals and objectives under the applicable RMPs, guidelines, and/or initiatives for land health standards, to recover habitat for federally listed and sensitive species, and to provide protocols and/or requirements for implementing and monitoring required reclamation. The Draft environmental impact statement (DEIS) evaluated environmental resources in relation to BLM goals and objectives under the applicable RMPs and guidelines, and identified impacts associated with each resource potentially affected by the construction, operation, and/or maintenance of the Project. Mitigation measures were developed to minimize impacts to environmental resources and are enforceable stipulations of the right-of-way grant to be issued by the BLM.

Some resources are outside the reach of effective mitigation directly through reclamation actions (i.e., health and safety, air quality, fire ecology [with the exception of noxious weeds, which are covered in Appendix B2 of this POD]); however, these resources could benefit indirectly from the application of reclamation treatments described in this Plan. Some resources (i.e., cultural and paleontological) can only be effectively mitigated through avoidance or recovery of those resources. Other resources (i.e., earth/soil and water resources) are protected through specific permits and requirements (e.g., storm water pollution prevention plan, Nationwide permit Number 12, etc.) that remain in place for up to three years beyond completion of construction. However, certain resources (i.e., visual, biological, and land use) potentially affected by the construction, operation, or maintenance of the Project can be directly mitigated through the reclamation of construction disturbances. As such, this Plan will focus on the rehabilitation of those three key resources, namely visual, biological, and land use resources, which have the greatest potential of being directly mitigated and monitored through the treatments and standards prescribed in this Plan.

This Plan identifies four reclamation zones, which are based on: (1) the impacts to visual, biological, and/or land use resources identified in the DEIS as a result of construction, operation, and maintenance of the Project; (2) the natural, unassisted recovery potential of each biotic community affected by the Project; and (3) the potential number of reclamation treatments that could be necessary to reclaim each biotic community according to agency management objectives. These reclamation zones describe an appropriate range of reclamation actions that may be implemented during pre- and post-construction activities. Typically, for locations where higher impacts to visual, biological, and/or land use resources have been identified, greater consideration for concentrated reclamation treatments may be appropriate. However, equally important as the identified resource impact is consideration of the vegetation community's

potential to naturally rehabilitate itself within and adjacent to the Project right-of-way without reclamation treatments being applied. For example, grasslands typically recover at a proportionately higher rate due to factors such as rapid growth rates of grasses and indicator plants, relatively homogenous vegetation diversity, and higher likelihood of new plant propagation because of seed abundance contained within the topsoil. Conversely, conifer/woodlands typically have a lower natural recovery potential due to factors such as slow growth rates of key indicator plants, higher plant diversity, shallow, rocky topsoils, and vegetation management objectives within the right-of-way.

While site-specific conditions also are a key factor in the application of reclamation treatments, these three primary considerations will assist the BLM and Proponent in appropriately allocating resources/efforts for reclamation treatments to successfully rehabilitate Project disturbances. Table F-1 depicts the evaluation of these considerations and identifies the four reclamation zones for the Project. The reclamation zones will also be mapped in the Final POD Figure F-1 and in the Final POD Volume II – Map Sets 1 and 2.

BLM resources of concern, including sensitive animal habitat, rare plants, visual resources, or other sensitive environmental features will be shown in the Final POD Volume II – Map Sets 1 and 2. These resources may require additional mitigation measures and have been described in the preceding appendices. Following is a description of each reclamation zone applicable to the Project.

Table F-1. Reclamation Zones Identification Matrix

Biotic Community	Natural Recovery Potential	Visual, Biological, and/or Land Use Impacts[1]				
		High	Moderate High	Moderate	Moderate Low	Low
Riparian/ Wetlands	Moderate	Z1	Z1	Z2	Z3	Z3
Conifer Woodlands	Low	Z1	Z2	Z3	Z3	Z4
Scrub/ Shrubland	Low-Moderate	Z1	Z2	Z3	Z4	Z4
Grasslands	High	Z2	Z3	Z4	Z4	Z4

Reclamation Treatments Potentially Required[2]:

Maximum | Many | Moderate | Standard

[1]Identified in the DEIS; [2]See Table B1-5

5.1.1. Reclamation Zone 1 – Highest Priority Areas (Z1)

Reclamation Zone 1 (Z1) is considered the highest priority for Project reclamation, and is characterized by areas with high to moderate-high impacts for visual, biological, and/or land use resources with moderate to low potential for the biotic community to substantially rehabilitate itself without reclamation intervention. Management of these areas is typically oriented toward actions which promote scenic and biodiversity values. These areas typically require the greatest

amount of reclamation treatments and methodologies to successfully achieve land management objectives and trend toward pre-existing ecological conditions (see Table F-5).

5.1.2. Reclamation Zone 2 – High Priority Areas (Z2)

Reclamation Zone 2 (Z2) areas are considered high priority for Project reclamation, and are characterized by areas with high to moderate impacts for visual, biological, and/or land use resources with high to low potential for the biotic community to substantially rehabilitate itself without reclamation intervention. As shown in Table F-1, high impacts to grasslands/savannah biotic communities have been given a designation of Z2 because of this community's high potential to naturally rehabilitate itself, and the relatively fewer reclamation treatments applicable in this community. Management on these lands is oriented toward actions which reduce human impacts to the landscape for the purposes of recovery of federally listed or BLM special status species (see Appendix B1 of this POD), preservation of scenic values, or protection of recreation opportunities. These areas typically require high amounts of reclamation treatments and methodologies to successfully achieve land management objectives and trend toward pre-existing ecological conditions (see Table F-5).

5.1.3. Reclamation Zone 3 – Moderate Priority Areas (Z3)

Reclamation Zone 3 (Z3) areas are considered moderate priority for Project reclamation, and are characterized by areas with moderate-high to low impacts for visual, biological, and/or land use resources with high to low potential for the biotic community to substantially rehabilitate itself without reclamation intervention. Typically, biotic communities in Z3 designations with low potential to naturally rehabilitate themselves have a relatively higher amount of potential reclamation treatments available to assist in rehabilitation while areas with high natural recovery potential have fewer treatments available. Management on these lands limits (either spatially or temporally) the range of uses to protect resources particularly sensitive to Project disturbance. These areas typically require Maximum to Few amounts of reclamation treatments and methodologies to successfully achieve land management objectives and trend toward pre-existing ecological conditions (see Table F-5).

5.1.4. Reclamation Zone 4 – Standard Priority Areas (Z4)

Reclamation Zone 4 (Z4) areas are considered standard priority for Project reclamation, and are characterized by areas with moderate to low impacts for visual, biological, and/or land use resources with high to low potential for the biotic community to substantially rehabilitate itself without reclamation intervention. Typically, impacts on these lands are moderate to low; however, where moderate impacts occur within Z4 areas, the biotic communities have a higher potential to naturally rehabilitate themselves. These areas typically allow for higher levels of landscape modification and human activities. Nonetheless, these lands may support significant areas of undisturbed natural vegetation and provide important connectivity with more intensively managed and higher sensitivity areas. These areas typically require many to few amounts of reclamation treatments and methodologies to successfully achieve land management objectives and trend toward pre-existing ecological conditions (see Table F-5).

This page intentionally left blank

Figure F-1. Reclamation Zones and Biotic Communities
[To Be Provided Upon Selection Of Final Route]

This page intentionally left blank

5.2. Identification of Reclamation Levels

Reclamation levels that prescribe the types of required pre- and post-construction actions were determined based on: (1) the type(s) of construction activity, facility features, and the area of associated disturbance; (2) the duration of disturbance (temporary or permanent) associated with these features; and (3) the type of disturbance associated with each activity as described below.

5.2.1. Types of Construction Activities and Facility Features

As presented in Appendix A1 – Construction Plan and Program of the POD, the activities associated with the construction of the major and ancillary facilities of the Project will include the following tasks:

- surveying the transmission centerline, other project features, and work areas
- Preconstruction resource survey for sensitive resources and noxious weeds
- upgrading or construction of temporary and permanent access roads
- clearing and grading activities for the right-of-way, tower sites, staging areas, and batch plants
- excavating and installing foundations
- assembling and erecting towers with temporary and permanent pad sites
- stringing conductors and ground wires
- installing counterpoise (tower grounds) where needed
- clean-up and reclamation of affected areas

The area affected by construction of the major facility features will vary as presented in Table F-1. This table identifies major Project features and describes the area of potential temporary or permanent disturbance and effect. The location of key construction activities and Project features (*e.g.*, access roads, tower sites, pulling and tensioning sites, staging areas) will also be identified in the Final POD Volume II, Map Sets 1 and 2, for reference by the Construction Contractor during pre- and post-construction reclamation activities.

5.2.2. Disturbance Duration

This plan defines two broad types of disturbance durations. These are described below, and summarized by construction activity or Project feature in Table F-2.

Long-term/Permanent Use Areas – the use of these areas is long-term and the landscape is permanently altered through removing vegetation, site leveling, modifying natural drainages, fencing, and constructing facilities, towers, and other structures. Permanent disturbance also includes constructing access roads needed for regularly scheduled maintenance of facilities and structures.

Short-Term/Temporary Use Areas – these areas are used only for the amount of time it takes to construct the Project. Examples include work areas where heavy equipment is used to move and install towers, pulling and tensioning sites, and driving across public land to gain access to the Project area and parking vehicles, and designated staging areas for equipment and materials.

Table F-2. Disturbance Characteristics of the Project			
Land Temporarily Disturbed			
Structure work area	Each structure site will be 200 feet x 200 feet (0.9 acre)		
Construction yards	One yard every 40 miles; approximately 15 to 20 acres per site		
Concrete batch plant	One plant every 30 miles; approximately 3 to 5 acres per site		
Wire pulling/tensioning sites	Each site will be 200 feet x 600 feet (2.8 acres); one every 18,000 feet		
Wire splicing sites (staggered 9,000 feet from pulling/tensioning site)	Each site will be 200 feet x 400 feet (1.8 acres); one every 18,000 feet		
Access roads (improve existing, spur, and new)	20-foot travel surface and 2-foot wide berms/drainage on each side = 24 feet total width		
Land Permanently Required			
Structure Base Areas	**Option A**	**Option B**	**Option C**
Guyed (lattice or tubular) 3-foot diameter base (7 sq feet) plus 4 anchors	2,000 sq feet	4,000 sq feet	4,000 sq feet
Self-supporting lattice 3-foot diameter x 4 legs (28 sq feet)	3,600 sq feet	7,200 sq feet	7,200 sq feet
Self-supporting tubular 8-foot diameter (50 sq feet)	2,825 sq feet	5,650 sq feet	5,650 sq feet
Dead-end lattice 6-foot diameter x 4 legs (112 sq feet)	3,025 sq feet	6,050 sq feet	6,050 sq feet
Dead-end tubular AC[1] – 10-foot diameter (78.5 sq feet) DC – 12-foot diameter (80.5 sq feet)	3,300 sq feet	6,600 sq feet	4,105 sq feet
Fiber optic communication regeneration station	50 feet x 50 feet (0.06 acre); located at 75-mile intervals		
Ground electrode facility	One facility near each terminus		
Access roads (improve existing, spur, and new)	20-foot travel surface and 2-foot wide berms/drainage on each side = 24 feet total width		
Access Roads			
Existing paved roads	These roads are typically highways and state routes, and will be used for travel to existing and new dirt roads to access the right-of-way (e.g., I-10, US XX, US XX, SR XX, etc.).		
Existing dirt roads (no improvements)	Requires no improvement to dirt/gravel road		
Existing dirt roads (with improvements)	Improvement of existing dirt road up to 24-foot-wide access road (20-foot road + two 2-foot berms/drainages on either side)		
New overland access (drive and crush or clear and cut)	24-foot-wide overland access road		
New access road (bladed)	Construction of 24-foot-wide dirt access road (20ft road + two 2-foot berms/drainages on either side)		

NOTES:
[1]Per pole; the dead-end structure for the AC line could have a single pole or three pole configuration

5.2.3. Disturbance Type

This plan defines four broad disturbance types based on activities associated with the construction of Project facilities that have been considered in the identification of reclamation levels and practices. These include the following:

5.2.3.1. Disturbance Type 1 (D1) – No new disturbance

These areas include existing access roads and pre-disturbed locations that do not require improvement (vegetation removal or grading) and will remain permanent (in place) after Project construction is complete.

5.2.3.2. Disturbance Type 2 (D2) – Overland Drive and Crush

In these areas, disturbance is caused by accessing a site without significantly modifying the landscape. Vegetation is crushed, but not cropped. Soil is compacted, but no surface soil is removed. Examples may include tensioning and pulling areas, tower pad sites, overland access to regeneration sites, and spur roads to towers. Even though vegetation may be damaged and even destroyed, the surface soil and seed bank remains in place. Some crushed vegetation will likely resprout after disturbance ceases. These activities would result in minimal to moderate disturbance.

5.2.3.3. Disturbance Type 3 (D3) – Overland Clear and Cut

In these areas, disturbance is caused by access to the Project site, which requires the brushing off all vegetation in order to improve or provide suitable access for equipment and vehicles. All vegetation is removed, soils are compacted, but no surface soil is removed (*i.e.*, no blading of topsoil). Examples include temporary access roads where overland access may be used in the construction of facilities, or in areas where roads may be improved for access (selective tree and brush clearing). In general, Clear and Cut activities will result in moderate amounts of disturbance.

5.2.3.4. Disturbance Type 4 (D4) – Clear and Cut with Soil Removal

Disturbance in these areas is caused by removing all vegetation in the affected zone, the soils are compacted and the surface soil is displaced (*i.e.*, blading of topsoil). These activities result in heavier disturbance, and examples include new access roads that require grading and filling, clearing and grading that may be associated with tower sites, and in some locations improvements to existing access.

5.2.4. Reclamation Levels

Five levels of reclamation (RL1 through RL5) have been identified based on the potential type of disturbance, the duration of disturbance, and the impact to visual, biological, and land-use resources associated with the construction of the Project as previously described. These reclamation levels are identified in Table F-3 and briefly described below.

Table F-3. Reclamation Levels			
Disturbance Level		Disturbance Duration	
		Permanent	Temporary
D1	No new disturbance	RL1	–
D2	Overland Drive and Crush	–	RL2
D3	Overland: Clear and Cut	–	RL3
D4	Clear and Cut with Soil Removal	RL4	RL5

5.2.4.1. Reclamation Level 1 (RL1) – Minimal level of disturbance, minimal actions – permanent

Construction in these areas does not result in new disturbance, requires minimal pre-construction treatment, and will normally require no post-construction actions (outside of routine maintenance). As described in Section 6, pre-treatment of existing weeds is one action that will be required in selected areas to protect from the infestation and the spreading of noxious weeds.

5.2.4.2. Reclamation Level 2 (RL2) – Low level of disturbance, few actions – temporary

Construction and activities in these areas are temporary and will result in disturbance that is confined to overland construction, which will include vegetation crushing requiring limited reclamation actions. As presented in Section 6, reclamation actions focus on noxious weed control and decompaction of affected soils.

5.2.4.3. Reclamation Level 3 (RL3) – Moderate level of disturbance, several actions – temporary

Construction and activities in these areas will result in moderate temporary disturbance, limited to clearing and require cutting of vegetation, and several reclamation actions as described in Section 6. In addition to the actions described under RL2, cleared vegetation will be used as vertical mulch, and supplemental mulch such as straw may be used to protect cleared areas. Areas of reclamation will be flagged or signage provided for protection in areas as appropriate.

5.2.4.4. Reclamation Level 4 (RL4) – High level of disturbance, few actions – permanent

Construction of Project facilities in these areas results in a high level of disturbance (*e.g.*, clearing, cutting, and soil removal); however, few reclamation actions will be required because these areas are permanent. This applies most specifically to new access roads that will serve for long-term maintenance and operation of the transmission line. In these locations, vegetation will not be replanted and replacement of soils and mulch will be limited, if required at all.

5.2.4.5. Reclamation Level 5 (RL5) – High level of Disturbance, maximum actions – temporary

These are the construction areas that will result in a high level of disturbance due to vegetation and soil removal, but are planned for long-term reclamation. In these areas, as presented in

Section 6, actions pertaining to soil salvage and seeding will be necessary to restore the disturbed seedbank.

Table F-4 identifies the various reclamation levels to be specifically applied for each of the construction components and associated disturbance levels/durations. In general, the order of preference on the associated disturbance levels is "overland drive and crush" in areas of new temporary disturbance (*e.g.*, structure work areas, pulling and tensioning sites); otherwise, "clear and cut" where practical, and finally, if necessary "clear and cut with soil removal."

Table F-4. Construction Component – Reclamation Levels

Construction Component	Disturbance Level	Disturbance Duration		Reclamation Level
		Permanent	Temporary	
Structure Work Area	D2: Overland Drive and Crush		●	RL 2
	D3: Overland Clear and Cut		●	RL 3
	D4: Clear and Cut with Soil Removal		●	RL 5
Wire-Pulling and Tensioning Sites, Wire-Splicing Sites, Construction Yards, and Guard Structures.	D2: Overland Drive and Crush		●	RL 2
	D3: Overland Clear and Cut		●	RL 3
Structure Base Regen Sites, Microwave Communications Sites	D4: Clear and Cut with Soil Removal	●		RL 4
Existing Paved Roads, Access Roads (no improvement)	D1: No New Disturbance	●		RL 1
Existing Access Road (with improvements)	D4: Clear and Cut with Soil Removal	●		RL 4
New Access Road	D2: Overland Drive and Crush		●	RL 2
New Access Road	D3: Overland Clear and Cut		●	RL 3
New Access Road	D4: Clear and Cut with Soil Removal	●	●	RL 4/RL 5

6. RECLAMATION PLAN

The actions required specifically for each level of reclamation (RL1-RL5) with respect to the reclamation zones previously discussed (Z1 – Z4) are presented in this section of the Plan.

Reclamation actions are physical treatments and activities that will occur throughout each phase of the Project and are specific to the levels of reclamation as previously discussed and illustrated in the Reclamation Action Identification Table (Table F-5). These actions will facilitate resource protection during construction, recovery for areas temporarily disturbed by Project construction, and promote the re-establishment of vegetation similar in species composition cover and diversity to pre-construction conditions in predetermined areas.

All reclamation actions described in this Plan are consistent with the relevant mitigation measures as defined in the POD Section 6.0 and the other applicable appendices in the POD. The Reclamation Action Identification Table (Table F-5) was created to illustrate appropriate reclamation actions for each reclamation zone and level, as they would occur during pre-

construction and post-construction activities. Reclamation Zones, facility features, disturbance types, and vegetation communities have been identified in the POD Volume II, Map Set 2. Table F-4 is to be used to discern reclamation levels presented in Table F-5 for each construction component as they occur in the reclamation zone. If a Project variance is required due to unforeseen environmental or engineering constraints, Table F-4 provides direction for reclamation actions in areas where modifications are required.

As described below, pre-construction actions are those that occur before construction of the Project is initiated to preserve resources or features of interest, and include activities associated with right-of-way preparation for reclamation and pre-construction activities. Post-construction actions focus on activities that will occur after Project construction has terminated, and generally include reclamation and maintenance activities.

6.1. Right-of-Way Preparation and Pre-Construction Actions

Right-of-way preparation includes general site preparation involving flagging of the right-of-way boundaries and construction areas. It also includes identification of plants to preserve in place weed infested areas, and identification of storage areas for windrowed plant and soil materials. Monitoring sites will also be established during pre-construction activities, as described in Section 7. Pre-construction actions focus on protection of sensitive areas and resources identified for preservation.

Disturbance related to Project construction may begin after all right-of-way preparation and pre-construction actions have been completed. Pre-construction actions identified for the Project include:

Weed Plan Implementation – Refer to Appendix B2 – Noxious Weed Management Plan for specific mitigation measures to implement where noxious weeds have been identified as well as preventative measures to be implemented to prevent the spread of noxious weeds during construction. When control measures have been implemented for the pre-construction phase, subsequent actions for right-of-way preparation may proceed.

Preserve in Place – This activity includes the preservation of existing vegetation to the degree possible, when screening of the proposed Project is desired to reduce visual impacts, and/or mature plant specimens are present to enhance habitat recovery and quality. Preservation of specimens may be requested by the BLM or recommended by the Construction Contractor on a case-by-case basis. Eligible specimens would include mature trees, sagebrush, succulents, or diverse vegetation groupings that would provide seed and a microclimate for seedling germination. Flagging or fencing of specimens to be preserved should be done before ground is disturbed (*e.g.*, trees). The Construction Contractor will ensure construction activities will not disturb the specimens.

Plant Salvage – Within known ranges of the Lesser Long-nosed Bat or Cactus Ferruginous Pygmy-owl, qualifying paniculate agave plants (*Agave palmeri*, *A. parryi*, and *A. chrysantha*) and saguaro cacti (*Carnegiea gigantea*) that cannot be avoided will be salvaged. Paniculate agave plants and saguaro cacti that qualify for salvage must be (1) currently in a healthy condition as determined by the reclamation subcontractor and/or CIC; and (2) agaves must not posses flower stalks and saguaros must be less than 15 feet in height.

In addition, succulent plants with potential to be impacted by construction may be considered for salvage in accordance with Table F-4, and if the following criteria are satisfied: (1) the plant is currently in a healthy condition as determined by the reclamation subcontractor and/or CIC; (2) yucca must be greater than 1 foot, but less than 6 feet tall; and (3) cacti must be more than 1 foot tall or 1 foot wide (including prickly pear). Cholla greater than 3 feet tall and 3 feet wide will not be salvaged, nor will any succulent that cannot be accessed safely due to steep slopes or rocky areas. Succulents that will not be salvaged will be broken up and windrowed as vertical mulch.

The Construction Contractor shall identify with flagging tape all paniculate agaves, saguaros, and other succulents and cacti that qualify for salvage, marking the north orientation for cactus only. A list describing quantity and species of plants to be salvaged will be forwarded by the Construction Contractor to the BLM upon completion of reclamation activities. Salvaged plants will be transplanted out of harm's way, in designated areas within the rights-of-way, by the Construction Contractor (or reclamation subcontractor) and approved by the CIC as described below.

Plants salvaged from areas of permanent disturbance will only be moved once, and replanted as described under Post-Construction Actions. In areas of temporary disturbance, salvaged plants will be replanted in temporary plant storage sites. Location of these temporary plant storage sites shall be provided by the Construction Contractor on a site-specific basis. These areas shall provide ease of care and maintenance for the plant material, as well as provide protection from construction activities until final planting. Plant storage areas will be near the project sites and within the rights-of-way close to watering truck routes, if possible. In these areas, salvaged plants will be replanted in vertical trenches that have a depth of 18 inches or greater. Yucca will be planted with 1-foot spacing. All succulents, approved by the CIC for salvage, will be dug bare root and replanted within 24 hours. All cacti will be planted with the same northward orientation in which they originally grew. Small cacti will be stockpiled separately from larger plants/clusters and watered thoroughly one time upon being transplanted in a stockpile area. All yucca stems will be thoroughly watered initially and DriWater ® (or equivalent) applied (completely buried), at a quantity of 1 quart for every foot of height. A one-time watering of stockpiled plants approximately 15 days after transplanting will occur to remove or minimize any air pockets in the soil and ensure proper soil stabilization. Care will be taken to properly stabilize all soil around roots of plants that are directly transplanted in the field. Stockpiled plants will be moved back as close to their original location as possible as described under Post-Construction Actions.

Monitoring Transect Selection – As discussed in Section 7.2, preliminary site monitoring locations will be established along the right-of-way based on Project engineering data provided in Volume II – Map Sets 1 and 2 during pre-construction surveys. Sites will be selected for each of the reclamation zones and vegetation communities traversed by the Project, as illustrated in Figure F-1. The number of sites on federally managed land will be determined by the BLM based on criteria needs. An average of five-paired (treatment and control) monitoring sites per vegetation community is recommended, based on the type of vegetation community and the size of its affected area. Larger areas affected may require more than the recommended average of five-paired monitoring sites, while smaller areas may require less. Once monitoring site locations are finalized, photographs will be taken prior to any construction-related disturbance.

Selective Clearing/Feathering – Selective clearing and feathering is the normal practice for mitigating impacts in areas where trees or brush of high densities have been cleared due to Project activities or in order to meet safety standards, and is to be specifically considered in the conifer/woodland and riparian/wetland biotic communities. Guiding principles used in the clearing of vegetation during construction are described below.

Where tree removal is necessary within the right-of-way, only trees within the conductor clearance zone or those trees which pose a hazard or impede the passage of equipment for stringing will be cut. Tree and shrub removal will only occur within authorized areas, and selection of danger and hazard trees, or trees to be removed, will be coordinated with the CIC. Trees to be thinned or selectively cleared will be identified (flagged) by the Construction Contractor and approved by the CIC.

The Proponent/Construction Contractor shall trim trees in preference to cutting trees, and shall cut trees in preference to bulldozing them, as directed by the CIC. Cut material may be placed in slash piles and/or used as vertical mulch as approved by the BLM. Trimming will be accomplished by use of pruning saws, power saws, nippers, bow saws, or cross-cuts. Limbs will be pruned flush with the trunk of the tree, except for portions of overhanging limbs. Use of axes for trimming will be prohibited.

Where necessary, tree removal will be accomplished by cutting as near to the surrounding grade wherever possible, and will not exceed 8 inches above grade when measured on the downhill side of the tree, and 2 inches on the uphill side of the tree. Where tree removal is necessary through dense stands of timber, “feathering” of the edge may occur in selective areas to visually soften the edge between the cleared and remaining trees as approved by the BLM.

Where the right-of-way crosses sensitive roads and trails, such as scenic or historic designated routes, selective clearing shall allow natural vegetation to be left in the right-of-way on each side (as possible). Also, cutting or pruning of trees will occur such that the fresh cut is oriented away from these areas where possible. Trimming should occur around the entire tree, so as not to create a flat side facing facilities.

Removal of “snags” also will be avoided where possible. Snag trees are large, often dead trees that provide wildlife habitat created by voids in the trunk. Raptors, particularly, can be found nesting in these trees.

Topsoil Segregation – This activity includes the separation of topsoil from subsoils (if subsoils are disturbed) which contains organic material, including the seeds of plants growing on the site, to be set aside for post-construction replacement. The Construction Contractor is to conduct topsoil salvage, and include all rocks and vegetation as vertical mulch. The depth at which topsoil separation should occur will be dependent on the soil type within which the reclamation activity will occur and will be discussed and approved by the reclamation subcontractor and a BLM Specialist. This topsoil should be labeled as such and protected from erosion and inadvertent use as fill. Topsoil shall never be mixed with subsoil. When stockpiled, topsoil shall be tackified with water to a 2-inch wetting depth to minimize erosion. Overall handling should be kept to a minimum. Separation between salvaged topsoil and subsoils will always be maintained.

Windrow Vertical Mulch – Materials, including dead plants, cut plants, and rocks are to be temporarily set aside during right-of-way preparation so that they may be shredded or otherwise placed on the soil surface (post-construction) to increase fertility, provide microclimates for seed to germinate, and stabilize soil. Large rocks and boulders shall also be removed to the side for post-construction use. Care should be taken to prevent the disturbance of the natural patina or desert varnish of these rocks. Rocks over 6 inches can be removed and stockpiled outside the disturbance areas (within the right-of-way). If an outcrop of boulders will be disturbed, some specimens may be windrowed as recommended by the CIC and Construction Contractor. In some vegetation communities where mulch density would be very high, removal of excess mulch off-site should be arranged after replacement quantities have been determined. Vertical mulch temporary storage areas should be located near the Project area within the right-of-way, but separate from the topsoil and subsoil storage. Project locations near sensitive viewers should locate windrowed mulch in a less visible area, where possible. Materials, including dead plants, cut plants, and rocks from noxious weed infested areas will not be used for vertical mulch.

Table F-5. Reclamation Action Identification Table

Reclamation Zones		Reclamation Zone 1					Reclamation Zone 2					Reclamation Zone 3					Reclamation Zone 4				
Zone Definition		Highest Priority Areas					High Priority Areas					Moderate Priority Areas					Standard Priority Areas				
Reclamation Level		**RL1**	**RL2**	**RL3**	**RL4**	**RL5**	**RL1**	**RL2**	**RL3**	**RL4**	**RL5**	**RL1**	**RL2**	**RL3**	**RL4**	**RL5**	**RL1**	**RL2**	**RL3**	**RL4**	**RL5**
PRE-CONSTRUCTION ACTIONS																					
Weed plan implementation	*Conifer/Woodland*	●	●	●	●	●	●	●	●	●	●	●	●	●	●	●	●	●	●	●	●
	Scrub/Shrubland	●	●	●	●	●	●	●	●	●	●	●	●	●	●	●	●	●	●	●	●
	Grassland	-	-	-	-	-	●	●	●	●	●	●	●	●	●	●	●	●	●	●	●
	Riparian/Wetland	●	●	●	●	●	●	●	●	●	●	●	●	●	●	●	-	-	-	-	-
Preserve in Place	*Conifer/Woodland*		●	●		●		●	●		●										
	Scrub/Shrubland		●	●		●		●	●		●										
	Grassland	-	-	-	-	-															
	Riparian/Wetland		●	●		●		●	●		●		●	●		●	-	-	-	-	-
Plant Salvage	*Conifer/Woodland*		●	●		●															
	Scrub/Shrubland																				
	Grassland	-	-	-	-	-															
	Riparian/Wetland		●	●		●			●		●						-	-	-	-	-
Monitoring Transect Selection	*Conifer/Woodland*		●	●		●		●	●		●		●	●		●		●	●		●
	Scrub/Shrubland		●	●		●		●	●		●		●	●		●		●	●		●
	Grassland	-	-	-	-	-		●	●		●		●	●		●		●	●		●
	Riparian/Wetland		●	●		●		●	●		●		●	●		●	-	-	-	-	-
Selective Clearing/ Feathering	*Conifer/Woodland*			●	●	●			●	●	●					●					
	Scrub/Shrubland																				
	Grassland	-	-	-	-	-															
	Riparian/Wetland			●	●	●			●	●	●					●	-	-	-	-	-
Topsoil Segregation	*Conifer/Woodland*					●					●					●					●
	Scrub/Shrubland					●					●					●					●
	Grassland	-	-	-	-	-					●					●					●

Table F-5. Reclamation Action Identification Table

Reclamation Zones		Reclamation Zone 1					Reclamation Zone 2					Reclamation Zone 3					Reclamation Zone 4				
Zone Definition		Highest Priority Areas					High Priority Areas					Moderate Priority Areas					Standard Priority Areas				
Reclamation Level		**RL1**	**RL2**	**RL3**	**RL4**	**RL5**	**RL1**	**RL2**	**RL3**	**RL4**	**RL5**	**RL1**	**RL2**	**RL3**	**RL4**	**RL5**	**RL1**	**RL2**	**RL3**	**RL4**	**RL5**
	Riparian/Wetland					●					●					●	-	-	-	-	-
Windrow Vertical Mulch	*Conifer/Woodland*			●		●			●		●			●		●					
	Scrub/Shrubland			●		●			●		●			●		●					●
	Grassland	-	-	-	-	-			●		●			●		●			●		●
	Riparian/Wetland			●		●			●		●			●		●	-	-	-	-	-
POSTCONSTRUCTION ACTIONS																					
Earthworks	*Conifer/Woodland*		●	●	●	●		●	●	●	●		●	●	●	●		●	●	●	●
	Scrub/Shrubland		●	●	●	●		●	●	●	●		●	●	●	●		●	●	●	●
	Grassland	-	-	-	-	-		●	●	●	●		●	●	●	●		●	●	●	●
	Riparian/Wetland		●	●	●	●		●	●	●	●		●	●	●	●	-	-	-	-	-
Topsoil Replacement	*Conifer/Woodland*					●					●					●					●
	Scrub/Shrubland					●					●					●					●
	Grassland	-	-	-	-	-					●					●					●
	Riparian/Wetland					●					●					●	-	-	-	-	-
Supplemental Planting	*Conifer/Woodland*			●		●					●										
	Scrub/Shrubland			●		●															
	Grassland	-	-	-	-	-															
	Riparian/Wetland			●		●			●		●						-	-	-	-	-
Seeding	*Conifer/Woodland*		●	●		●		●	●		●		●	●		●					
	Scrub/Shrubland		●	●		●		●	●		●		●	●		●					
	Grassland	-	-	-	-	-		●*	●*		●		●*	●*		●					
	Riparian/Wetland		●*	●*		●		●*	●*		●					●	-	-	-	-	-
Alternative seeding	*Conifer/Woodland*		●	●		●		●	●		●		●	●		●					
	Scrub/Shrubland		●	●		●		●	●		●		●	●		●					

Table F-5. Reclamation Action Identification Table

Reclamation Zones		Reclamation Zone 1					Reclamation Zone 2					Reclamation Zone 3					Reclamation Zone 4				
Zone Definition		Highest Priority Areas					High Priority Areas					Moderate Priority Areas					Standard Priority Areas				
Reclamation Level		**RL1**	**RL2**	**RL3**	**RL4**	**RL5**	**RL1**	**RL2**	**RL3**	**RL4**	**RL5**	**RL1**	**RL2**	**RL3**	**RL4**	**RL5**	**RL1**	**RL2**	**RL3**	**RL4**	**RL5**
	Grassland	-	-	-	-	-		●*	●*				●*	●*							
	Riparian/Wetland		●*	●*				●*	●*								-	-	-	-	-
Transplant Salvage	*Conifer/Woodland*		●	●		●															
	Scrub/Shrubland		●	●		●															
	Grassland	-	-	-	-	-															
	Riparian/Wetland		●	●		●			●		●						-	-	-	-	-
Vertical Mulch Replacement	*Conifer/Woodland*			●		●			●		●			●		●					
	Scrub/Shrubland			●		●			●		●			●		●					●
	Grassland	-	-	-	-	-			●		●			●		●			●		●
	Riparian/Wetland			●		●			●		●			●		●	-	-	-	-	-
Permeon™ (or equivalent)	*Conifer/Woodland*				●	●				●	●										
	Scrub/Shrubland				●	●				●	●										
	Grassland	-	-	-	-	-				●	●										
	Riparian/Wetland				●	●											-	-	-	-	-
Supplemental Mulch	*Conifer/Woodland*			●		●			●		●										
	Scrub/Shrubland			●		●			●		●			●		●					
	Grassland	-	-	-	-	-								●		●					
	Riparian/Wetland			●		●			●		●						-	-	-	-	-
Off-road Vehicle Deterrent	*Conifer/Woodland*	●	●	●	●	●	●	●	●	●	●	●	●	●	●	●	●	●	●	●	●
	Scrub/Shrubland	●	●	●	●	●	●	●	●	●	●	●	●	●	●	●	●	●	●	●	●
	Grassland	-	-	-	-	-	●	●	●	●	●	●	●	●	●	●	●	●	●	●	●
	Riparian/Wetland	●	●	●	●	●	●	●	●	●	●	●	●	●	●	●	-	-	-	-	-
Signage	*Conifer/Woodland*	●	●	●	●	●	●	●	●	●	●	●	●	●	●	●	●	●	●	●	●

Table F-5. Reclamation Action Identification Table

Reclamation Zones		Reclamation Zone 1					Reclamation Zone 2					Reclamation Zone 3					Reclamation Zone 4				
Zone Definition		Highest Priority Areas					High Priority Areas					Moderate Priority Areas					Standard Priority Areas				
Reclamation Level		**RL1**	**RL2**	**RL3**	**RL4**	**RL5**	**RL1**	**RL2**	**RL3**	**RL4**	**RL5**	**RL1**	**RL2**	**RL3**	**RL4**	**RL5**	**RL1**	**RL2**	**RL3**	**RL4**	**RL5**
	Scrub/Shrubland	●	●	●	●	●	●	●	●	●	●	●	●	●	●	●	●	●	●	●	●
	Grassland	-	-	-	-	-	●	●	●	●	●	●	●	●	●	●	●	●	●	●	●
	Riparian/Wetland	●	●	●	●	●	●	●	●	●	●	●	●	●	●	●	-	-	-	-	-
Monitoring	*Conifer/Woodland*		●	●		●		●	●		●		●	●		●		●	●		●
	Scrub/Shrubland		●	●		●		●	●		●		●	●		●		●	●		●
	Grassland	-	-	-	-	-		●	●		●		●	●		●		●	●		●
	Riparian/Wetland		●	●		●		●	●		●		●	●		●	-	-	-	-	-

*****Seeding and alternative seeding to be applied only as required and described in Appendix B10 – Noxious Weed Management Plan.

6.2. Post-Construction Reclamation Actions

Post-construction reclamation actions occur after Project facility construction has been completed, and primarily focus on stabilizing permanent use areas and reclaiming temporary areas to allow reoccupation of vegetation. The CIC must approve site stabilization/reclamation before construction activities are considered complete for the Project. Construction reclamation actions that may be used are defined below and are organized by their sequence of implementation.

Earthworks – These activities may include: (1) recontouring, (2) soil decompaction, and (3) applying appropriate soil erosion measures as needed. Earthmoving equipment replaces the removed material as close to the pre-construction contour as possible, to restore the visual quality and provide stability to the slope. Soil decompaction may include ripping or scarifying to allow permeation of water into the ground. Erosion control measures such as water bars may be installed as recommended by the Construction Contractor or CIC, used in conformance with the SWPPP, as described in Appendix E – Storm Water Pollution Prevention Plan Methodology.

Recontouring includes burying subsurface soils (backfilling holes) excavated during construction activities so that the natural terrain contours are maintained to the extent practicable. The Construction Contractor is instructed that excess subsoil from excavated or graded areas (around transmission tower bases) will be evenly spread over disturbed areas moistened and compacted to a relative average density comparable to undisturbed adjacent material before respreading topsoil. Subsoils will not be spread outside of these flagged construction areas and will be restricted to areas of permanent disturbance, if possible. Excessive subsoils that cannot be reasonably spread (i.e., will substantially change the grade of recontouring compared to adjacent conditions, or the depth of subsoils may impair right-of-way rehabilitation and reclamation) will be removed off-site to a BLM approved disposal site.

Where any compaction exists, the surface will be ripped or scarified to a depth of 6 inches as appropriate (*e.g.*, not applicable to rock faces, severe slopes, or cliff areas), and will retain a 12-inch buffer from existing vegetation or plants designated as preserve in place. Depth and area of compaction relief will depend on site-specific conditions. Decompaction or ripping will be conducted to avoid “corn rows.” Cross-ripping is preferable and care should be taken to prevent inverting the soil layers and preserving any vegetation in place. Deep sandy soils do not need to be decompacted and will not be ripped.

Installation of water bars or other erosion control measures will be recommended by the Construction Contractor or CIC and detailed to site-specific conditions.

Weed Plan Implementation – Refer to Appendix B2 – Noxious Weed Management Plan for specific mitigation measures to implement where noxious weeds have been identified, as well as preventative measures to be implemented to prevent the spread of noxious weeds after completion of construction. This includes post-construction monitoring and treatment, as necessary.

Topsoil Replacement – Topsoil will be replaced without mixing with subsoil. The purpose of this practice is to prevent mixing fertile, shallow soils with deeper soils that may be less productive because of rock, gravel, sand, calcareous layers, salinity, or other chemical

characteristics that would adversely affect desired vegetation. Topsoils shall be dispersed evenly across the disturbed site. Additional erosion control and soil stabilization may be required to minimize soil movement, especially for heavily sloped areas or for fine-textured soils. Surface soil will not be handled excessively during windy conditions. Soil will be wet to a depth of 2 inches to prevent further erosion. The site will be left adequately rough after surface soil placement to provide micro sites for seed germination and to prevent significant movement of soil by seasonal weather events (wind or rain).

Supplemental Planting – Supplemental planting will be employed as an additional technique to achieve site disturbance recovery in Reclamation Zone 1 areas and potentially any riparian area, as appropriate. The feasibility of supplemental planting will be assessed on a case-by-case basis, and will be employed where biotic community and local conditions are favorable to the success of continued establishment of the planting. Where supplemental planting is determined to be a viable reclamation option, planting types and patterns will mimic conditions found in surrounding undisturbed areas. In general, areas conducive for supplemental planting include, but are not limited to, riparian/wetland areas, areas of lesser slope and erosional runoff, and areas with relatively low rates of herbivory.

Seeding – Reseeding involves planting new seed of indigenous native species to establish desired vegetation within affected vegetation communities. However, in some cases as determined by the BLM, non-native species may be recommended in seeding mixes as a tool to improve chances of reclamation success when ecological site(s) have large quantities of invasive species. Seeding should only be applied on areas of the Project which receive at least 7 inches of rainfall per year. A BLM specialist (e.g., botanist, range management specialist, or soil scientist designated by the BLM Authorized Officer) will provide the list of approved type and quantity of seed mixtures, seeding method, and seeding locations. In this regard, mixtures that discourage the establishment of invasive and noxious weeds will be considered as described under Alternative Seeding below. Seed mixtures will be based on vegetation communities described in Section 4 of this Plan and should be developed close to the time of reclamation to ensure seed availability. Seeding shall be repeated if a satisfactory stand is not established as determined by the authorizing agency officer upon evaluation after the second growing season.

Alternative Seeding – Alternative seeding is employed to establish ground cover in disturbed or weed infested areas by seeding of annual grasses and/or forbs. The annual grasses are usually sterile rye or oats, since the regeneration of non-natives is not desirable. Annuals provide short-term soil cover, stabilization, and a source of organic litter until other vegetation can become established. Similar to regular seeding, alternative seeding mix compositions and methods dispersing seeds will be determined through coordination with a BLM botanist, range management specialist, seed core officer or soil scientist (as determined by the BLM Authorized Officer).

Transplant Salvage – Paniculate agaves, saguaros, and other succulent plants and cacti that were removed from temporary use areas and stored during construction will be replanted in the same general location (as possible) at the proper compass orientation during pre-construction activities. Plants removed from permanent use areas will also be located in pre-approved locations as close as possible to original conditions and similarly oriented. All salvaged plant material will be replanted in natural patterns. Saguaros and large yucca will be carefully removed from the ground, taking care to not damage stems, roots, or the base of the plant. Yuccas will be

re-planted in groups of three or more for a natural effect. Each transplant will be filled with water and allowed to drain once. The hole will then be filled with water again, and then back-filled with soil to form a muddy matrix to about 18 inches from the surface. DriWater® (or equivalent) will be applied (completely buried) at a quantity of 1 quart for every foot in height.

Salvaged plants will require the installation of temporary protective measures to minimize herbivory, and/or disturbance from off-highway vehicle users. Plants desirable to herbivores will need a protective sleeve secured around the plant until they are fully established. Every effort will be made to transplant the material at the time of year (early spring or fall) when the plants are the least likely to experience environmental stress. The plants will be adequately maintained for 1 full year to ensure protective measures are intact. If salvaged plants are located in an area susceptible to off-highway vehicle access, the closure of access roads may be recommended in specific areas, as approved by the BLM. Replacement of salvaged succulents may be strategically placed or concentrated in certain areas to deter access. A combination of plants, snags, or rocks may be used in these areas, where appropriate, as directed by the BLM. Transplanting and maintenance of plant material will be done in accordance with the survival rates and success criteria described in Section 7.1.

Replacement of Vertical Mulch – Vertical mulch is not entirely in contact with the soil surface; rather, parts of the mulch rise above the surface. Removed and stored trees and shrubs are the sources of vertical mulch. For areas that have been cleared, vegetation that was windrowed to the outside of the disturbance boundary shall be replaced back onto the site. Mulch should be placed randomly.

Large rocks and boulders removed to the side of the disturbance prior to construction shall be placed back with the darkened side facing up in a natural appearing pattern. Permeon™ may be applied to rocks to enhance the desert varnish or patch any tool marks on boulders when necessary by the Construction Contractor and approved by the BLM based on site conditions and will be installed according to the manufacturer's specifications. Boulder outcrops that were windrowed shall be replaced by the Construction Contractor in a manner that is similar to pre-construction conditions where possible under direction of the BLM or CIC.

Permeon™ (or equivalent) – Permeon™ is an artificial desert varnish that reproduces natural colors similar in appearance to aged desert varnish, in a short period of time. It is non-toxic to plants and animals. Depending upon the soil type, Permeon™ may be required if the soil surface contrast is high, due to cut slopes and aged rocks. Application rates and color tint will be site specific and may require both a blanket application and spot treatments depending on the adjacent natural landscape. The product is applied via backpacks or a truck-mounted sprayer, if access to the area adjacent to the reclamation site remains open. Product application may be necessary for large boulders that have been windrowed, and application would occur after they have been replaced, including any tool marks on boulders as recommended by the Construction Contractor and CIC. Application rates and techniques will be determined by the Construction Contractor and/or BLM Visual Resource Specialist.

Supplemental Mulch – Mulch usually consists of shredded plant material or straw, but also includes wood fiber, paper mulch, or biodegradable erosion mats. Straw mulch may be utilized as an alternative to vertical mulch when vertical mulch is not available or will not provide adequate coverage in areas that will not be seeded. Hydroseeding, wood fiber, use of tackifiers or

erosion blankets may be a less expensive alternative to straw mulch in areas that require seeding as well. The quantity of mulch to be used shall be recommended by the Construction Contractor and approved by the BLM based on site conditions and it will be installed according to the manufacturer's specifications. Straw mulch and other alternative mulches shall be certified weed-free as specified in Appendix B2 – Noxious Weed Management Plan.

Off-road Vehicle Deterrents – Operation of off-road vehicles can cause mechanical damage to stabilization structures and soils and mortality to plants. Access by such vehicles will be limited in areas of reclamation. Measures to control off-road vehicles and other unauthorized vehicle use of the right-of-way will be determined in consultation with the BLM at the appropriate time. Specific areas of potential access to the right-of-way by off-road vehicles will be identified, and measures to minimize or eliminate access will be developed, as appropriate. These measures may include the installation of signs, fences with latching/locking gates, selectively placed boulders, and/or vertical mulch of heavy woody material. Development of off-road vehicle deterrents will be determined on a case-by-case basis based on BLM requirements and Construction Contractor recommendations.

Signage – Reclamation areas will require informational signs pertaining to reclamation efforts in order to prevent further disturbance by humans within these recovering areas. All reclamation areas will have signs installed at appropriate intervals to deter vehicular damage to the site. The Proponent will provide the reclamation signs and t-posts. Sign locations will be provided by the Proponent to the BLM following completion of post-construction reclamation procedures and prior to the initiation of reclamation monitoring. Signs will be removed by the Proponent upon release of reclamation sites, as determined by the BLM (see Section 7.4).

Reclamation Monitoring – Monitoring will be conducted prior to construction and continue through post-construction phases of the Project. Evaluation of reclamation success will be based on criteria as described in Section 7.1.

6.3. Modifications and Field Changes

The reclamation actions described in this plan shall be implemented by the Construction Contractor or assigned subcontractor under the guidance of the BLM and the CIC. Adjustments to reclamation levels or actions by the Construction Contractor may be necessary if Project conditions change. However, any changes to these levels of reclamation, and the associated actions will be reviewed and approved by the BLM. This plan is intended to provide flexibility with respect to construction and unknown constraints that may be encountered in the field. Changes to the original disturbance level or duration, previously described, will be documented by the Construction Contractor and reclamation level will be reassessed using tables F-3 and F-4 to ensure that appropriate reclamation actions will be implemented.

7. MONITORING

This Plan requires post-construction monitoring to evaluate reclamation success of restored areas associated with the construction of Project facilities, identify the need for adaptive management measures, and to make a final determination regarding reclamation success to release the Proponent from further monitoring and reclamation actions. In accordance with the BLM Restoration Success Standards and Monitoring Plan, the purpose of the monitoring plan is to (1)

present reclamation goals and success standards, (2) describe the monitoring practices to be implemented, and (3) discuss adaptive management and site release from monitoring.

Reclamation success standards will be used by the BLM to determine if the implemented reclamation actions have adequately achieved the goals and objectives outlined in this Plan, with consideration for the local site conditions. The monitoring practices include standard techniques for monitoring sites, data collection, and the quantitative (numerical) and qualitative (descriptive) measures to be used in monitoring reclamation success. Specific monitoring requirements, including the site specific data analysis protocol, will be developed by the reclamation subcontractor in cooperation with the BLM prior to start of pre-construction activities. This will allow the BLM to make more accurate conclusions pertaining to reclamation success based on site specific conditions, such as biotic community and climatic conditions, once construction has been completed. Adaptive management may be necessary to determine appropriate remedial actions, based on monitoring observations, for sites that have not demonstrated a trend toward reclamation success. If required, implementation of remedial actions will be determined by the BLM based on the monitoring data and annual report to be submitted for up to 3 years following completion of construction. After 3 years of post-construction monitoring, a final report will be submitted to the BLM summarizing monitoring data, observations, and the overall trend toward reclamation for each vegetation community. The Proponent will be released from further reclamation and monitoring after the report and annual monitoring data are submitted to the BLM, and the BLM has accepted the report. If the BLM is unable to determine an overall trend toward reclamation success (see Section 7.1) after the 3-year monitoring period, additional monitoring, and potentially further remedial action, will be required until a trend toward reclamation success can be determined.

7.1. Reclamation Goals and Success Standards

Consistent with this Plan's statement in Section 0, "the intent of this plan is to prevent unnecessary degradation of the environment during construction, restore temporary use areas, and reclaim disturbed areas such that these areas are functionally and visually compatible.…" Reclamation success, as presented in this monitoring section, is defined by the progression of vegetation and soils toward pre-construction disturbance conditions, to the extent practicable.

As presented in Section 3.1 of this Plan, the Proponent will be responsible for monitoring reclamation efforts for the Project. Reclamation success will be evaluated by the BLM by comparing Project-affected treatment sites with control site conditions in terms of plant species density and cover, and reduction of Project contrast compared to the landscape surrounding the right-of-way. Reclamation of treatment sites will be considered successful if they are within a specified percentage of the mean plant species density and cover of the control site. The BLM will establish acceptable reclamation success standard percentages in accordance with this Plan (see Table F-6). Control sites will be representative areas that exhibit the same target plant community that is located adjacent to or near the Project-affected treatment sites. The establishment of control sites (see Section 6.1 of this Plan) within undisturbed community conditions will allow the monitor to compare the reclamation progress of the treatment site against the control site, which has not been affected by construction of the Project. Land use has minimal metrics for evaluation of reclamation success; however conditions of treatments such as OHV deterrents and Project signage will be considered during Project monitoring events.

This Plan identifies reclamation zones and reclamation levels that identify specific reclamation actions in relation to the corresponding vegetation community. The four reclamation zones, are based upon impacts to visual, biological, and land use resources identified in the DEIS. These impacts take into account BLM land management objectives that incorporate resources of concern or designated special management areas. These zones that are applicable to the Project include Zone 1 – Highest Priority Areas, Zone 2 – High Priority Areas, Zone 3 – Medium Priority Areas, and Zone 4 – Standard Priority Areas (see Table F-1 and Figure F-1 of the Final POD). In particular, as described in Section 5.1, higher impacts to sensitive environmental features in Zones 1 and 2 areas may require more intensive reclamation actions to mitigate disturbance issues associated with the Project and maximize the prospect for resource rehabilitation.

Reclamation success is highly dependent on vegetation community type, natural (unassisted) recovery potential, environmental conditions (*e.g.*, annual precipitation), avoidance of future disturbance, and proper implementation of reclamation actions. Recommended success standards will be monitored within each of the previously described reclamation zones specific to the setting of the Project, including topography and the vegetation communities as identified in this Plan. If the final monitoring report concludes that typical environmental conditions, proper implementation of reclamation actions, and lack of disturbance is evident, reclamation success will be based on the trend toward native vegetation cover and density for each community type, as presented in Table F-6 and illustrated on Figure F-1. Since biotic communities which are more capable of unassisted rehabilitation are better leveraged to achieve right-of-way stability and native plant species recruitment than those which require substantial reclamation intervention to establish a stable right-of-way condition, these communities will be held to a higher standard of reclamation success than those with a lesser capability of natural rehabilitation. Target percentages (to be determined by the BLM) of native species cover (amount of vegetation canopy per unit) and density (number of plant species per unit) for reclamation success will be evaluated relative to control plot conditions, typically adjacent to the right-of-way. Percent cover and density will be based on the quantitative data (see Section 7.3) collected from the control plot for each monitoring site.

Table F-6. Reclamation Success Requirements, Relative to Control Plot Conditions [NOTE: Specific Percentages to be Developed by the BLM]

Biotic Community	Natural Recovery Potential	Reclamation Zone			
		Z1	Z2	Z3	Z4
Conifer Woodlands	Low				
Scrub/ Shrubland	Low-Moderate				
Riparian/ Wetlands	Moderate				N/A
Grasslands/ Savannah	High	N/A			

Legend: Highest Requirement; High Requirement; Moderate Requirement; Standard Requirement

7.2. Monitoring Practices (Methodology)

All monitoring sites will be delineated during pre-construction activities and will include the collection of baseline data for subsequent post-construction monitoring. Post-construction monitoring and collection of data will be conducted during spring and/or fall, after construction and reclamation actions are completed. After each monitoring effort, a summary of monitoring information will be provided to the BLM for review and discussion of reclamation conditions. As currently anticipated, construction activities will result in varying disturbance levels that will require two types of monitoring:

- General route monitoring – general field reconnaissance (windshield survey) and reporting of conditions in treated areas along the entire length of the transmission line right-of-way
- Site monitoring – detailed field reconnaissance and reporting at designated reclamation monitoring sites and control areas along the transmission line right-of-way

A description of the activities associated with these two monitoring methods (practices), and how these practices will be assigned to areas affected by construction of the 500kV transmission line and associated facilities, is presented below.

The contractor hired to perform reclamation monitoring will consult with the BLM (Lower Sonoran, Safford and Tucson Field offices in Arizona; Las Cruces, Socorro, Torrance, and Roswell Field Offices in New Mexico) to adapt these protocols, as needed, to meet localized conditions and concerns.

7.2.1. Route Monitoring

A general field review of the entire transmission line route, where accessible by vehicle, will be conducted in conjunction with transect site monitoring (see Section 7.2.2). The intent of this review is to document overall recovery conditions associated with the construction of the transmission line and substations, and assess visual and land use resources rehabilitation, as appropriate for the Project. Conditions to be observed may include, but are not limited to, areas of dead preserved plants, performance of the noxious weed management plan within the right-of-way, and/or the performance of erosion prevention techniques for the Project. In lieu of establishing transects, documentation may include establishing single photopoints at agreed-upon locations with the BLM, estimating area or plant populations affected, and/or recording the apparent cause or remediation efforts required. Potential remediation locations may be documented by the transmission line tower number or global positioning system coordinates.

Rehabilitation of visual impacts can be evaluated by conducting a contrast analysis of the constructed Project in relation to the surrounding landscape as designed on BLM Form 8400-1 and as described in the DEIS, Visual Resources. Adaptive management actions may be implemented based on findings from the route monitoring as recommended by the BLM and described in Section 7.4. Each visit should assess designated route monitoring locations and document new locations where appropriate. Areas that will be considered through route monitoring are illustrated in Table F-7.

Table F-7. Reclamation Monitoring Requirements

Construction Component (activity areas)	Disturbance Level	Disturbance Duration		Reclamation Level	Monitoring
		Perm	Temp		
Structure Work Area	D2		●	RL 2	Route
	D3		●	RL 3	Route
	D4		●	RL 5	Route, Transect Site
Wire-Pulling and Tensioning Sites, Wire-Splicing Sites, Construction Yards, and Guard Structures	D2		●	RL 2	Route
	D3		●	RL 3	Route
Structure Base Regeneration Sites	D4	●		RL 4	None
Existing Paved Roads, Access Roads (no improvement)	D1	●		RL 1	None
Existing Access Roads (with improvements)	D4	●		RL 4	None
Overland Access	D2		●	RL 2	Route
Overland Access	D3		●	RL 3	Route
New Access Roads	D4	●	●	RL 1/RL 5	None/Route, Transect Site

7.2.2. Transect Site Monitoring

Preliminary transect site monitoring locations will be established along the right-of-way, based on Project engineering data provided in the POD Map Volumes during pre-construction surveys. Transect sites will be selected for each of the reclamation zones and vegetation communities traversed by the Project, as illustrated in Figure F-1. Transect site selection will be prioritized to include areas in the vicinity of sensitive plant species, Critical Habitat areas, and locations with high visual resource values. Where possible, transect site monitoring locations will meet more than one of these selection criteria, and the number of sites will be determined by the BLM based on criteria needs. An average of five paired (treatment and control) transect sites per vegetation community is recommended (not to exceed a total of 25 paired monitoring sites) based on the type of vegetation community and the size of its affected area. Larger areas affected may require more than the recommended average of five paired monitoring sites while smaller areas may require less. Final determination of transect sites will be approved by the BLM prior to construction. Cooperation with the Contractor may be necessary immediately prior to construction if changes to construction work area(s) affect the location of the preliminary transect monitoring site. Once transect site locations are finalized, photographs will be taken (1) prior to any construction-related disturbance, (2) when initial reclamation efforts have been completed, and (3) during each monitoring visit.

For each transect monitoring site, paired vegetation transects will be installed and documented as treatment or control for quantitative monitoring. In general, the treatment transect will be placed within an affected area (normally within the immediate right-of-way), and the control transect will be placed immediately adjacent to the right-of-way, on undisturbed ground. Transect size and quantity will be determined based on the final footprint of disturbed areas, in cooperation with the BLM. Transect pairs should be sized and oriented in a similar manner, for consistency, if terrain or construction conditions require deviation. In addition, the location of transect sites

should avoid areas susceptible to future human disturbance (off-road vehicle, transmission line maintenance, planned future utilities), where possible, to preserve the integrity of each transect for the duration of the monitoring period.

Plots will be examined quarterly during the first year following completion of construction, and semiannually during years two and three following completion of construction. A variety of vegetation data will be collected, including quantitative and descriptive information. Parameters that will be used to measure reclamation success are presented in detail in Section 7.3 of this Plan. Reclamation transect monitoring sites will also assess noxious and invasive weed establishment that may require remedial actions such as removal or treatment. However, it should be noted that monitoring for known noxious weed locations may occur independently of reclamation monitoring, as outlined in Appendix B2 – Noxious Weed Management Plan. Reclamation monitoring will also include the consideration of erosion control as a key indicator to measure the trend toward reclamation success (where applicable), and remedial actions may be taken in conjunction with monitoring efforts to control erosion, as recommended by the BLM. These remedial actions will also follow requirements as stipulated in Appendix A6 – Erosion, Dust Control, and Air Quality Plan.

7.2.3. Monitoring Requirements

In order to address the various construction activities (components) associated with the transmission line and the disturbance types and duration of disturbance associated with these construction activities, reclamation monitoring will occur according to the reclamation levels (RL 1 through RL 5) and their associated construction components as described in Section 5.2. Categories RL 1 and RL 4 (*e.g.*, at structure bases, existing and long-term access) are permanent disturbance areas that will not require reclamation monitoring. However, all reclamation level areas will follow guidelines for noxious weed monitoring as specified in Appendix B2. RL 2, RL 3, and RL 5 are temporary disturbance areas that will require reclamation actions and post-construction monitoring in selected locations to evaluate reclamation success. The highest disturbance level for construction activities is associated with RL 5 areas that occur in temporary structure work areas and are associated with new access roads. A summary of reclamation monitoring requirements for these construction components (activity areas) is presented in Table F-7.

The specific location of monitoring sites associated with these different activities in key areas (*e.g.*, Critical Habitat, sensitive plant locations, visually sensitive areas, and areas of sensitive soils) will be identified, reviewed, and approved by the BLM prior to initiation of pre-construction activities. Once monitoring sites have been approved, a subcontractor will establish the sites in the field and baseline data (*i.e.*, photographs, biometrics, soil conditions) will be collected for subsequent monitoring up to 3 years following post-construction activities.

7.3. <u>Data Collection</u>

Reclamation monitoring will include both quantitative (numerical) and qualitative (descriptive) data collection at the designated monitoring sites approved by the BLM. Quantitative monitoring will document the trend and degree of change at each site, and qualitative monitoring will detect the initiation of change and changes resulting from environmental conditions, such as precipitation, allowing for a record of change over time.

Reclamation monitoring for the Project will use vegetation as the main indicator of recovery, but observations on soil conditions will also be collected and considered when assessing progress toward functionality. Measurements and descriptions will be accompanied by photographs that will be used to help document the status of recovery at all monitoring sites. Sampling points will be located and mapped according to global positioning system coordinates. Photographic reference points will be the primary method of qualitative monitoring for the Project. A protocol for taking photographs and standardized data-recording forms will be developed to ensure consistency of monitoring by the BLM. Qualitative (descriptive) and quantitative (numerical) information that will be gathered during general route monitoring and site monitoring are described in detail below.

7.3.1. Qualitative (Descriptive) Information

Qualitative data collection will occur annually for both route and site monitoring. The goal of qualitative monitoring is to document site conditions and assess the need for remedial actions to ensure that sites are progressing toward the success standard established by the BLM. The Basin and Range and Colorado Plateau typically have unpredictable weather patterns that may affect reclamation success within the allotted 7-year post-construction monitoring timeframe currently established by the BLM. Qualitative evaluations that are conducted at predetermined monitoring sites during monitoring will serve as representative indicators for similarly disturbed areas in the same vegetation community. These site evaluations will then serve as a baseline when conducting general overall route surveys for the remainder of the treated areas within that vegetation community. Any outstanding or non-project-related disturbances that could affect reclamation would also be generally described during the general route monitoring. Recovery from construction-disturbance activities, such as clearing and grading in the semi-arid and arid climactic zones, typically does not occur in a short amount of time, and it is for this reason that the monitoring plan will assess the trend toward reclamation success standards outlined in Section 7.1 and presented in Table F-7.

Reclamation success may be assessed by the presence or condition of certain site characteristics that encourage recruitment of native vegetation. Reclamation actions of a given site, if implemented successfully, are anticipated to contribute to the stabilization of soils, seedling or seedbank recruitment, and avoidance of noxious weeds. Lack of erosion at a site provides evidence that soils have been adequately stabilized, while natural recruitment and/or reproduction indicates that important functional processes are in place that initiate regeneration, such as pollination and seed dispersal. Noxious weeds could potentially compete with native perennial species, and relatively high abundances can have negative effects on site conditions. Evidence of animal use is also used as an indicator that habitat conditions have been restored; however, grazing can negatively affect reclamation success if unmanaged. Patterns of established vegetation help to determine whether large bare areas are indicative of site conditions or simply a result of the patchiness of surrounding vegetation. Each of these site characteristics will help determine trends that relate to reclamation success. Once recruitment conditions have been met, established vegetation is anticipated to contribute to the maintenance and functionality of the community to ensure continued success after monitoring has concluded.

7.3.2. Quantitative (Numerical) Information

Success parameters will be numerically measured on those treatment sites, as identified with the BLM (see Section 7.2), during the fifth and seventh growing seasons (or sooner if deemed appropriate) to determine if there is a trend toward reclamation success based on comparison of the control transect for each site. Quantitative assessment during the fifth year will provide enough time for vegetation establishment of the affected areas based on climatic trends for the area. Trends toward reclamation success as well as remedial actions (if necessary) will be identified during the fifth year. Quantitative monitoring in year seven will allow any remedial actions or climatic events to discernibly affect treated areas. Density monitoring records the number of plants per unit of area. This technique is sensitive to changes in the vegetation community caused by climatic conditions; resource uses and provides useful information on seedling emergence, survival, and mortality. Not all plant species present will be monitored. Monitoring will focus on dominant or indicator perennial species as determined by control-site observations of the adjacent plant community. Species density will be evaluated by comparing the total number of indicator species in the treatment site to that of the control site. Other plant species will be inventoried, but densities will not be evaluated. Vegetation cover monitoring records the coverage of vegetation canopy per unit of area. Density and cover data, along with other biometrics, will be recorded on standard field data sheets.

7.4. Adaptive Management and Site Release

The BLM requires that an adaptive management approach designed to allow frequent review and feedback on the progress of reclamation be implemented as a part of monitoring activities for the Project. Adaptive management greatly increases the potential for reclamation success by providing early detection of problems and the opportunity to implement remedial actions to address these problems. Effective monitoring is an essential element of adaptive management because it provides reliable feedback on the effects of reclamation actions. Adaptive management actions may be recommended on a case-by-case basis where feasible, and as determined by the BLM, during the 7-year monitoring timeframe.

If it has been determined that adaptive measures are necessary, monitoring data will provide information on reclamation components that are deficient, such as native vegetation cover, soil compaction, or lack of natural surface material. Based on this information, appropriate reclamation actions may include measures such as supplemental seeding, mulching, and additional weed and/or erosion control measures. Recommendations could also include waiting a few years prior to taking remedial action to determine if favorable germination/establishment conditions are affected. All adaptive management actions will be subject to the review and approval of the BLM. Again, the Contractor will use all reasonable methods to help the Project Proponent ensure that reclamation is progressing toward the success standards identified in Section 7.1 and Table F-4 of this monitoring plan. It is possible that some sites will be incapable of supporting adequate vegetation to progress towards the success standards due to conflicting land management, project-caused conditions, and environmental limitations not associated with the Project. For instance, reclamation may fail in areas with unmanaged off-road vehicle access, grazing of domestic livestock, natural disasters such as fire or flooding, and construction of other utility projects. If reclamation failure is determined to be caused by these conditions, neither the Project Proponent, nor any of its construction/reclamation primary Contractors or Subcontractors, will be held responsible for continued reclamation and monitoring of these sites.

REFERENCES

Brown, D.E., Ed. 1994. Biotic communities: Southwestern United States and northwestern Mexico. University of Utah Press, Salt Lake City, Utah. 342 pp.

Brown, D.E., C.H. Lowe and C.P. Pase. 1979. A digitized classification system for the biotic communities of North America, with community (series) and association examples for the Southwest. Journal fo the Arizona-Nevada Academy of Science 14 (Supplement 1):1-16. Reprinted as Appendix I. Pp 302-315 in Brown, D.E., ed. 1994. Biotic communities: Southwestern United States and northwestern Mexico. University of Utah Press, Salt Lake City, Utah.

Brown, D.E., F. Reichenbacher and S.E. Franson. 1998. A classification of North American biotic communities. University of Utah, Salt Lake City, Utah. 142 pp.

This page intentionally left blank