United States Department of the Interior

Bureau of Land Management

Environmental Assessment DOI-BLM-NM-F010-2012-0402-EA

ROSA UNIT 03, 04, 05, AND 06 NATURAL GAS WELL PADS AND WATER MANAGEMENT SYSTEM

December 11, 2012

U.S. Department of the Interior
Bureau of Land Management
Farmington District
Farmington Field Office
6251 N. College Blvd., Ste. A
Farmington, NM 87402
Phone: (505) 564-7600
FAX: (505) 564-7608

It is the mission of the Bureau of Land Management to sustain the health, diversity, and productivity of the public lands for the use and enjoyment of present and future generations.

TABLE OF CONTENTS

1. Introduction 1

1.1 Background 2

1.2 Purpose and Need for Action 3

1.3 Decision Framework 4

1.4 Conformance with Applicable Land Use Plans and Other Environmental Assessments 4

1.5 Scoping and Issues 5

1.5.1 Scoping 5

1.5.2 Issues 6

1.5.3 Issues Considered but Not Analyzed 7

2. Alternatives Including the Proposed Action 9

2.1 Alternative A—No Action 9

2.2 Alternative B—Proposed Action 9

2.2.1 Well Pad Construction and Drilling 13

2.2.2 Stimulation Activities 14

2.2.3 Water Management System 16

2.2.4 Pipelines 18

2.2.5 Reclamation 18

2.2.6 Work Force and Transportation 18

2.2.7 Summary of Disturbance—Alternative B 19

2.2.8 Design Features 19

2.3 Alternative C 21

2.3.1 Well Drilling 23

2.3.2 Stimulation Activities 23

2.3.3 Reclamation 24

2.3.4 Summary of Disturbance—Alternative C 24

2.4 Alternatives Considered but Eliminated from Further Analysis 24

3. Description of Affected Environment 27

3.1 General Setting 27

3.2 Air Resources 27

3.2.1 Air Quality 27

3.3 Cultural Resources 30
3.4 Soils 32
3.5 Vegetation 34
3.6 Water Resources 34
3.7 Wildlife 36
3.8 Migratory Birds 37
3.9 Special Status Species 37
3.10 Socioeconomics 38
3.11 Transportation and Traffic 40
3.12 Visual Resources 41
4. Environmental Consequences 43
4.1.1 Direct and Indirect Effects 43
4.1.2 Cumulative Effects 43
4.1.3 Reasonably Foreseeable Development 43
4.2 Comparison Between Horizontal and Directional Drilling Shale Gas Development 47
4.3 Air Resources 48
4.3.1 Direct and Indirect Effects from Alternative B (Proposed Action) on Air Quality 49
4.3.2 Direct and Indirect Effects of Alternative C on Air Quality 53
4.3.3 Cumulative Effects 55
4.4 Cultural Resources 57
4.4.1 Direct and Indirect Effects of Alternative B (Proposed Action) on Cultural Resources 57
4.4.2 Cumulative Effects of Alternative B (Proposed Action) on Cultural Resources 57
4.4.3 Direct and Indirect Effects of Alternative C on Cultural Resources 57
4.4.4 Cumulative Effects of Alternative C on Cultural Resources 57
4.5 Soils 58
4.5.1 Direct and Indirect Effects of Alternative B (Proposed Action) on Soils 58
4.5.2 Cumulative Effects of Alternative B (Proposed Action) on Soils 58
4.5.3 Direct and Indirect Effects of Alternative C on Soils 59
4.5.4 Cumulative Effects of Alternative C on Soils 59
4.6 Vegetation 59
4.6.1 Direct and Indirect Effects of Alternative B (Proposed Action) on Vegetation 59
4.6.2 Cumulative Effects of Alternative B (Proposed Action) on Vegetation 59
4.6.3 Direct and Indirect Effects of Alternative C on Vegetation 60

4.6.4 Cumulative Effects of Alternative C on Vegetation 60
4.7 Water Resources 60
4.7.1 Effects Common to Both Action Alternatives 60
4.7.2 Direct and Indirect Effects of Alternative B (Proposed Action) on Water Resources 62
4.7.3 Cumulative Effects of Alternative B (Proposed Action) on Water Resources 64
4.7.4 Direct and Indirect Effects of Alternative C on Water Resources 64
4.7.5 Cumulative Effects of Alternative C on Water Resources 65
4.8 Wildlife 65
4.8.1 Direct and Indirect Effects from Alternative B (Proposed Action) on Wildlife 65
4.8.2 Cumulative Effects of Alternative B (Proposed Action) on Wildlife 67
4.8.3 Direct and Indirect Effects from Alternative C on Wildlife 67
4.8.4 Cumulative Effects from Alternative C on Wildlife 68
4.9 Special Status Species 68
4.9.1 Direct and Indirect Effects from Alternative B (Proposed Action) on Special Status Species 68
4.9.2 Cumulative Effects from Alternative B (Proposed Action) on Special Status Species 69
4.9.3 Direct and Indirect Effects of Alternative C on Special Status Species 69
4.9.4 Cumulative Effects of Alternative C on Special Status Species 70
4.10 Migratory Birds 70
4.10.1 Direct and Indirect Effects of Alternative B (Proposed Action) on Migratory Birds 70
4.10.2 Cumulative Effects of Alternative B (Proposed Action) on Migratory Birds 71
4.10.3 Direct and Indirect Effects of Alternative C on Migratory Birds 71
4.10.4 Cumulative Effects of Alternative C on Migratory Birds 72
4.11 Socioeconomics 72
4.11.1 Direct and Indirect Effects of Alternative B (Proposed Action) on Socioeconomics 72
4.11.2 Cumulative Effects of Alternative B (Proposed Action) on Socioeconomics 72
4.11.3 Direct and Indirect Effects of Alternative C on Socioeconomics 73
4.11.4 Cumulative Effects of Alternative C on Socioeconomics 73
4.12 Transportation and Traffic 74
4.12.1 Direct and Indirect Effects of Alternative B (Proposed Action) on Traffic and Transportation 74
4.12.2 Cumulative Effects of Alternative B (Proposed Action) on Traffic and Transportation 75
4.12.3 Direct and Indirect Effects of Alternative C on Traffic and Transportation 76
4.12.4 Cumulative Effects of Alternative C on Traffic and Transportation 76
4.13 Visual Resources 76

4.13.1 Direct and Indirect Effects of Alternative B (Proposed Action) on Visual Resources ... 76
4.13.2 Cumulative Effect of Alternative B (Proposed Action) on Visual Resources ... 76
4.13.3 Direct and Indirect Effects of Alternative C on Visual Resources ... 77
4.13.4 Cumulative Effects of Alternative C on Visual Resources ... 77
5. Consultation and Coordination ... 78
6. Bibliography ... 80
7. Glossary ... 84

LIST OF FIGURES

Figure 2-1. Rosa Unit 03, 04, 05, and 06 natural gas well pads and water management system. ... 10
Figure 2-2. Alternative B project area map. ... 11
Figure 2-3. Land status of the Proposed Action components. ... 12
Figure 2-4. Comparison of vertical/directional and horizontal well bores. ... 22
Figure 3-1. Geologic time column of the San Juan Basin (USDI/BLM 2003*a*). ... 35

LIST OF TABLES

Table 2-1. Timing of the Proposed Action activities in relation to the Middle Mesa Specially Designated Area seasonal closure. ... 13
Table 2-2. Natural gas wells proposed for drilling under Alternative B. ... 13
Table 2-3. Summary of disturbance under Alternative B—Proposed Action. ... 19
Table 2-4. Summary of Disturbance under Alternative C. ... 24
Table 3-1. Ozone monitored values in the Four Corners Region. ... 28
Table 3-2. Criteria Pollutant concentration monitored values in San Juan County. ... 29
Table 3-3. Climate normals for the Farmington area 1981-2010. ... 30
Table 3-4. Summary of cultural resources encountered within the Proposed Action area of potential effect. ... 31
Table 3-5. Farmington Field Office special status species, habitat associations, and potential to occur in the project area. ... 37
Table 3-6. Population, unemployment rate, and median household income. ... 39
Table 3-7. Traffic conditions along travel route from Aztec, New Mexico, to Middle Mesa. ... 40
Table 3-8. La Plata County Road average daily traffic counts from 2009 through 2012. ... 41
Table 4-1. Summary comparison of anticipated cumulative development per action alternative. ... 45
Table 4-2. Number of wells spud in the Farmington Field Office planning area since 2008. ... 45
Table 4-3. Comparison of horizontal and directional drilling per well and associated design features. ... 48
Table 4-4. Criteria pollutant and VOC emissions estimated for the Proposed Action per well and the total for 7 wells. ... 50
Table 4-5. Area emissions for 2008 in tons/year. ... 51

Table 4-6. Percent increase in emissions in analysis area from the Proposed Action. 51
Table 4-7. Estimated greenhouse gas emissions from the Proposed Action. 52
Table 4-8. Summary of emissions in tons for Alternative C. 53
Table 4-9. Estimated greenhouse gas emissions from Alternative C (tons/year). 54
Table 4-10. Summary comparison of estimated total emissions in tons between Alternative B (7 horizontal wells) and Alternative C (22 directional wells). 55
Table 4-11. Summary comparison between Alternative B and Alternative C of increased emissions. 55
Table 4-12. Summary average daily vehicle trips per alternative. 74
Table 4-13. Summary estimated total vehicle trips and average daily vehicle trips per alternative. 75

APPENDICES

Appendix A Authorizing Actions

Appendix B Comment Response

Appendix C Applications for Permit to Drill

Appendix D Water Management System Plats

Appendix E Description of Horizontal Directional Drilling

Appendix F Biological Survey Reports

Appendix G Visual Contrast Rating Worksheets

Appendix H Assumptions Used in the Air Emissions Calculator and Summary Calculations

ACRONYMS

AADT	Average Annual Daily Traffic
ACEC	Area of Critical Environmental Concern
ac-ft	acre-feet
APD	Application for Permit to Drill
bbl	barrel
bcf	billion cubic feet
BHA	Bottom Hole Assembly
BLM	Bureau of Land Management
BSR	Biological Survey Report
CDOT	Colorado Department of Transportation
CDPHE	Colorado Department of Public Health
CEQ	Council on Environmental Quality
CFR	Code of Federal Regulations
CH4	methane
CO	carbon monoxide
CO_2	carbon dioxide
CO_{2eq}	carbon dioxide equivalent
COA	Condition of Approval
dBA	decibels A weighted
EA	Environmental Assessment
Ecosphere	Ecosphere Environmental Services
EIS	Environmental Impact Statement
ESA	Endangered Species Act
F	Fahrenheit
FFO	Farmington Field Office
FLPMA	Federal Land Policy and Management Act
GHG	Greenhouse gas
HAP	Hazardous air pollutant
HDD	horizontal directional drilling
HDPE	High density polyethylene
IBLA	Interior Board of Land Appeals
ICAP	Ignacio Area Corridor Access Plan
LAC	La Plata Archaeological Consultants
LOS	level of service
Mcf	thousand cubic feet
$\mu g/m^3$	micrograms per cubic meter
mg/L	milligrams per liter
MOU	Memorandum of Understanding
NAAQS	National Ambient Air Quality Standards
NATA	National Air Toxics Assessment
NEPA	National Environmental Policy Act

NMAAQS	New Mexico Ambient Air Quality Standards
NMAC	New Mexico Administrative Code
NMED	New Mexico Environment Department
NMED/AQB	New Mexico Environment Department/Air Quality Bureau
NMOCD	New Mexico Oil Conservation Division
NMPIF	New Mexico Partners in Flight
NMSA	New Mexico Statutes Annotated
NO_2	Nitrogen dioxide
NOx	nitrogen oxide
NRCS	Natural Resources Conservation Service
NTL	Notice to Lessee
PL	Public Law
PM	Particulate matter
PM_{10}	Particulate matter with an aerodynamic diameter equal to or less than 10 microns
$PM_{2.5}$	Particulate matter with an aerodynamic diameter equal to or less than 2.5 microns
POD	Plan of Development
ppb	parts per billion
ppm	parts per million
PRMP/FEIS	Proposed Resource Management Plan/Final Environmental Impact Statement
psi	pounds per square inch
RFDS	Reasonably foreseeable development scenario
RMP	Resource Management Plan
ROD	Record of Decision
ROW	Right-of-way
SDA	Specially Designated Area
SO_2	Sulfur dioxide
SUPO	Surface Use Plan of Operations
TDS	Total dissolved solids
USBR	U.S. Bureau of Reclamation
USC	United States Code
USDA	U.S. Department of Agriculture
USDI	U.S. Department of Interior
USDOE	U.S. Department of Energy
USEPA	U.S. Environmental Protection Agency
USFWS	U.S. Fish and Wildlife Service
USGS	U.S. Geological Survey
VOC	volatile organic compounds
VPD	Vehicles per day
VRI	Visual Resource Inventory
VRM	Visual Resource Management
WPX Energy	WPX Energy Production, LLC
WQCC	Water Quality Control Commission

1. INTRODUCTION

The Bureau of Land Management Farmington Field Office (BLM/FFO) received a proposal from WPX Energy Production, LLC (WPX Energy, formerly Williams Production Company, LLC) for development of the Rosa Units 03, 04, 05, and 06 well pads and to establish a water management system. The water management system would consist of two multi-well fluids management pits (fluid management pits) and a subsurface water line. The proposed wells and water management system would be located on lands administered by the BLM/FFO in San Juan and Rio Arriba counties, New Mexico. The federal mineral estate is also administered by the BLM/FFO.

This Environmental Assessment (EA) is prepared in compliance with the National Environmental Policy Act of 1969, as amended (NEPA; Public Law [PL] 91-90, 42 United States Code [USC] § 4321 et seq.). This EA has been prepared in compliance with all applicable regulations and laws passed subsequent to the NEPA, including Council on Environmental Quality (CEQ) regulations (40 Code of Federal Regulations [CFR] Part 1500-1508); U.S. Department of the Interior (USDI) requirements (Department Manual 516, Environmental Quality [USDI 2004]); and BLM guidelines in Handbook H-1790-1 (USDI/BLM 2008*b*).

The Farmington Resource Management Plan (RMP) with Record of Decision (ROD; USDI/BLM 2003*b*) established a Condition of Approval (COA) for the Middle Mesa Wildlife Area Specially Designated Area (SDA), which imposed a seasonal timing limitation on construction and drilling from December 1 to March 31 of each year. In December 2011, the BLM/FFO approved the decision to grant WPX Energy a modification to the seasonal closure for the Middle Mesa portion of the Rosa Unit for an approximate 5-year period, imposing certain terms and conditions (USDI/BLM 2011*a*). The environmental analysis for the modification was presented in the Final Environmental Assessment for the Middle Mesa Plan of Development[1] (POD) (DOI-BLM-NM-F010-254-EA; USDI/BLM 2011*a*).

The Middle Mesa POD provided the BLM and public with a detailed description of the project and identified both potential impacts that pertain to the SDA and possible mitigation measures that WPX could offer in consideration of the surface disturbance and winter big game range issues for which the seasonal timing limitation was established. The Middle Mesa POD also contemplated that future impacts associated with the proposed Middle Mesa development would be analyzed in site-specific NEPA analyses. The Proposed Action and alternatives evaluated in this EA are analyzed for site-specific impacts associated with development considered in the POD. Any further proposed development would also be evaluated on a site-specific basis as required by 43 CFR § 3162.3-1. The Proposed Action would be developed within the Middle Mesa Wildlife SDA and would utilize horizontal drilling techniques as outlined in the Middle Mesa POD (USDI/BLM 2011*a*).

In 2011, WPX Energy projected the phased development of eight well pads, two fluid management pits, and 53 horizontal Basin Mancos wells in the Middle Mesa portion of the Rosa Unit (USDI/BLM 2001*a*).

[1] An appeal was filed with the Interior Board of Land Appeals on November 26, 2012

WPX Energy is proposing the first phase of that development as the Proposed Action. There are several reasons necessitating phased development: (1) valid period of approved Applications for Permit to Drill (APDs), (2) APD permitting costs, (3) need for additional data, and (4) currency of site-specific surveys.

An APD approval is valid for 2 years from the date that it is approved, or until lease expiration, whichever occurs first. If the operator submits a written request before the expiration of the original approval, the BLM, as appropriate, may extend the APD's validity for up to 2 additional years (43 CFR Part 3160). WPX Energy has drilled two horizontal test wells to the Basin Mancos Formation. Supplementary data are needed to more fully evaluate the resource and extraction techniques. Also, site-specific surveys of proposals are not valid indefinitely due to regulatory and natural environment changes that may occur in an area over any extended period (e.g., more than 2 years). Therefore, it would be impractical for WPX Energy at this time to propose full development of the Basin Mancos Formation in the Middle Mesa portion of the Rosa Unit.

1.1 Background

WPX Energy holds five leases within the Middle Mesa portion of the Rosa Unit, which were unitized in 1948. The New Mexico Statutory Unitization Act of 1978 (70-7-1 to 70-7-21) allows for unitized management, operation, and further development of oil and gas properties to achieve greater ultimate hydrocarbon reserve recovery, prevent waste, and protect the correlative rights of all mineral interest owners in each unitized area. The intent of the act is to substantially increase the recovery of oil and gas above the amount that would be recovered by primary recovery alone.

The Middle Mesa Portion of the Rosa Unit comprises approximately 5,700 acres, of which approximately 4,800 acres are public lands. There are more than 825 wells and 193.6 miles of road within the Middle Mesa Wildlife Area SDA based on BLM/FFO data as of May 1, 2011. WPX Energy's Middle Mesa portion of the Rosa Unit covers approximately 12 percent of the total SDA. Approximately 18.5 miles of roads and 53 well pads containing 98 natural gas wells are located within the Middle Mesa portion of the Rosa Unit.

Access to oil and gas reserves in a particular formation is regulated by spacing rules established by the New Mexico Energy, Minerals and Natural Resources Department Oil Conservation Division (NMOCD). On Federal lands, the BLM generally abides by NMOCD rules but has the authority to establish its own spacing and well density rules.

On July 7, 2011, WPX Energy went to hearing before the NMOCD in its application for a project area for the Mancos Participating Area in the Rosa Unit (Case No. 14663). The NMOCD subsequently issued its order approving the entire Mancos Participating Area (save and except any uncommitted tracts contained therein) as a project area and establishing setback requirements of 660 feet from the outer boundary of the Mancos Participating Area (Order R-13200-C).

The NMOCD proposed to the Oil Conservation Commission the adoption of amendments to the rules concerning horizontal drilling (Case No. 14744). An Order of the Commission was issued January 23, 2012 (Order No. R-13499), amending rules 19.15.14.8 New Mexico Administrative Code (NMAC) and 19.15.16 NMAC. The new rules state, "A horizontal well need not be confined to a single spacing unit, but may be dedicated instead to a 'project area' comprising one or more complete (in one Section or in

more than one Section), contiguous spacing units; (2) Horizontal wells must be set back from project area boundaries the same distance as the required setback from spacing unit boundaries for vertical wells (usually 330 feet for oil wells and 660 feet for gas wells); (3) Existing vertical wells within a horizontal well's project area will continue to be assigned to their existing spacing units, and share the unit's allowable with the horizontal well; and (4) Existing statewide or pool rules that limit the number of wells that may simultaneously produce from a pool within a given spacing unit or portion of a spacing unit will not apply to horizontal wells."

Although shale (Lewis/Gallup) has been under development for many years in the basin, WPX Energy conducted 10 scientific (test) and/or stratigraphic wells to specifically evaluate the Basin Mancos Formation. Eight of these wells were either s-shaped or vertical while two were horizontal wells. Four wells were drilled in 2008 and six in 2010. WPX Energy has also completed 3D seismic studies on Middle Mesa and Rosa Mesa to analyze the lateral geologic continuity of the formation and to identify the presence of faults or other interruptions to the strata. Micro-seismic studies have also been conducted for the scientific well completions. The study objectives were to illustrate the vertical micro-seismic events resulting from hydraulic fracturing. The purpose of these scientific wells was to evaluate the potential of the gas resource, to identify the most efficient extraction techniques, and ultimately to guide a development plan that optimizes resource extraction while minimizing surface disturbance. The Middle Mesa POD was developed using data derived from these past scientific wells, stratigraphic tests, and seismic studies.

WPX Energy has filed APDs for seven proposed wells with the BLM/FFO. These proposed wells would be located on four proposed well pads within the Middle Mesa portion of the WPX Energy Rosa Unit. WPX Energy would submit Sundry Notices, as approved by the BLM/FFO in accordance with the terms and conditions of WPX Energy's existing lease rights, to develop two fluids management pits and construct a water line. The objectives of the Proposed Action are to balance development of the minerals and protection of other resources in a manner consistent with the lease rights held by WPX Energy. The Proposed Action is designed to develop the resources in an economical manner while optimizing resource extraction, protecting wildlife values, consolidating disturbance and reducing surface impacts, and collecting additional scientific data.

1.2 Purpose and Need for Action

The purpose of the Proposed Action is to allow WPX Energy access to their existing mineral rights.

The need for the action is to meet the BLM's obligation to allow economic extraction, in an efficient and environmentally compatible manner of the recoverable oil and natural gas reserves known to exist in the valid mineral leases issued to WPX Energy, as administered by the BLM. The BLM's policy is to make mineral resources available for disposal and to encourage development of mineral resources to meet national, regional, and local needs in accordance with BLM's multiple-use mandate under the Federal Land Policy and Management Act of 1976 (FLPMA). The Mineral Leasing Act of 1920, as amended (30 USC § 181 et seq.), authorizes the BLM to issue oil and gas leases for the exploration of mineral resources and permits the development of those leases. The need for the action is established by the BLM's authority under the Mineral Leasing Act; the Mining and Minerals Policy Act of 1970 (30 USC § 21 et seq.); the FLPMA (43 USC § 1701 et seq.); the National Materials and Minerals Policy, Research,

and Development Act of 1980 (30 USC § 1601 et seq.); and the Federal Onshore Oil and Gas Leasing Reform Act of 1987 (30 USC § 181 et seq.).

1.3 Decision Framework

In compliance with the Mineral Leasing Act, the decision to be made is in what manner resource development may occur. The decision to be made in this document is whether or not to approve the APDs and Sundry Notices and with what conditions. Under the NEPA, the FFO must determine if there are any significant environmental impacts associated with the proposed action alternative warranting further analysis in an Environmental Impact Statement (EIS). The BLM/FFO Field Manager is the responsible officer who will decide either:

- To approve the proposed APDs and Sundry Notices with design features as submitted by WPX Energy;
- To approve the proposed APDs and Sundry Notices with additional mitigations;
- To analyze the effects of the proposal in an EIS; or
- To deny the APDs and Sundry Notices.

A Sundry Notice (BLM Form 3160-5) is used to request changes to the Surface Use Plan of Operations (SUPO). This includes changes to the SUPO during permitting and any subsequent new construction, reconstruction, or alteration of existing facilities, roads, lines, or other production facilities after a well has been permitted. The proposed fluids management pits and water line would be constructed under Sundries in accordance with the terms and conditions of WPX Energy's existing lease rights. A Sundry Notice must be submitted and approved prior to implementation. The water management system, including the water line and fluid management pits, is evaluated along with the proposed seven APDs in this EA.

1.4 Conformance with Applicable Land Use Plans and Other Environmental Assessments

Pursuant to 40 CFR § 1508.20 and 1502.28, this EA tiers to the information and analysis contained in the 2003 Farmington Proposed Resource Management Plan/Final Environmental Impact Statement (PRMP/FEIS; USDI/BLM 2003*a*). The Proposed Action would be in conformance with the oil and gas leasing and development management actions in the RMP/ROD signed in September 2003 and updated in December 2003 (USDI/BLM 2003*b*). A reasonably foreseeable development scenario (RFDS) was developed for the 2003 RMP that estimated foreseeable oil and gas development in the New Mexico portion of the San Juan Basin, beginning in January 2002 and lasting for a 20-year duration. The RFDS also contemplated that technological advances could alter development of the basin during the 20-year period. The Mancos shale reservoir was analyzed in the RFDS as an emerging gas play over a large part of the basin where it had not been previously developed (Engler et al. 2001). Based on the forecast in the RFDS, the 2003 RMP estimated and analyzed long-term environmental impacts that would result from several alternative development scenarios. The 2003 ROD stipulated that companies applying for APDs may be required to evaluate the use of new technology such as directional drilling from existing pads and

other techniques in order to reduce surface disturbance with its consequent environmental impacts (USDI/BLM 2003*b*, page 4). The PRMP/FEIS and RMP/ROD are available for review at the FFO, New Mexico, or electronically at http://www.nm.blm.gov/ffo/ffo_home.html.

This EA also tiers to the *Environmental Assessment and Decision Record for the Williams Four Corners, LLC Middle Mesa Plan of Development* (USDI/BLM 2011*a*) and incorporates by reference (40 CFR § 1502.21) information and analysis from the *Environmental Assessment of the Criteria and Impacts of Granting Exceptions to the Seasonal Closure Periods in Designated Wildlife Areas* (USDI/BLM 2008*a*), both of which are on file at the FFO.

Oil and gas development is recognized as an appropriate use of public lands in the FFO planning area (USDI/BLM 2003*b*). The RMP adheres to the federal mandates contained in the Energy Policy and Conservation Action (42 USC § 6217) and Executive Order 13212, which direct federal land managing agencies to expedite the production of the federal mineral estate for the development of reliable domestic sources of energy (USDI/BLM 2003*b*, pages 1 and 11).

Other authorizing actions (federal, state, or local permits, licenses, or other consultation requirements) are discussed in Appendix A.

1.5 Scoping and Issues

1.5.1 Scoping

The CEQ defines scoping as "an early and open process for determining the scope of issues to be addressed and for identifying the significant issues related to a proposed action alternative" (40 CFR § 1501.7). Scoping is the process by which the BLM solicits internal and external input on the issues, impacts, and potential alternatives that will be addressed in an EIS or EA. As outlined in the BLM NEPA Handbook, it is optional for the BLM to conduct external scoping on actions analyzed by an EA (USDI/BLM 2008*b*, § 6.3.2).

The BLM/FFO Interdisciplinary Team was integrally involved in the internal scoping to identify potential issues, to understand the proposal, develop the purpose and need, and develop a range of alternatives. WPX Energy presented a preliminary proposal to the BLM Interdisciplinary Team on February 6, 2012. An internal scoping report was developed based on Interdisciplinary Team input.

For this analysis, the BLM/FFO Interdisciplinary Team also considered comments from external scoping conducted for the Middle Mesa POD EA (USDI/BLM 2011*a*). Issues identified during public scoping included analyzing the reasonably foreseeable air quality impacts of implementing the Middle Mesa POD, the consideration of alternatives in that the POD did not analyze a No Action Alternative that prescribed no action, and that the unique impacts of horizontal shale gas drilling were not analyzed (WildEarth Guardians and San Juan Citizens Alliance 2012).

On September 5, 2012, the BLM/FFO and the U.S. Bureau of Reclamation (USBR) Western Colorado Area Office entered into a Memorandum of Understanding (MOU) establishing a cooperating agency relationship for the purpose of preparing this EA. The BLM is the Lead Agency responsible for this EA and the Decision Record. The USBR is recognized to have special expertise concerning issues or project

components that may impact the integrity of Navajo Reservoir, or the operation and maintenance of Navajo Reservoir.

The preliminary EA was posted on the BLM/FFO web site on September 12, 2012, for a 30-day public comment period. A total of two comment letters were received. A thorough review of the comments was conducted and each carefully considered and addressed. Final comment resolution included the BLM/FFO Interdisciplinary Team to ensure that all comments were captured and that the response was appropriate. The BLM/FFO Interdisciplinary Team comment response is provided as Appendix B.

1.5.2 Issues

For the purpose of BLM NEPA analysis, an "issue" is a point of disagreement, debate, or dispute with a proposed action based on some anticipated environmental effect. Preliminary issues are frequently identified during the development of the proposed action through scoping. Additionally, supplemental authorities that provide procedural or substantive responsibilities relevant to the NEPA process may help identify issues for analysis. While many issues may arise during scoping, not all of the issues raised warrant analysis. Issues raised through scoping are analyzed if:

- Analysis of the issue is necessary to make a reasoned choice between alternatives.
- The issue is significant (an issue associated with a significant direct, indirect, or cumulative impact, or where analysis is necessary to determine the significance of impacts) (USDI/BLM 2008*b*).

The following issues were identified by the Interdisciplinary Team during internal scoping as potential issues of concern. The BLM also considered comments identified during scoping and public comment during the preparation of the Middle Mesa POD (USDI/BLM 2011*a*).

- Does horizontal drilling to access Mancos shale have unique effects that are distinct from the impacts of drilling technology currently employed in the San Juan Basin?
- How would the alternatives affect air quality in the area?
- How would the alternatives affect cultural resources?
- How would the alternatives affect soils and vegetation?
- How would the alternatives affect drinking water quality and quantity?
- How would the alternatives affect wintering big game and other wildlife in the Middle Mesa SDA?
- How would the alternatives affect special status species including migratory birds?
- How would the alternatives affect socioeconomics in the area?
- How would the alternatives affect traffic levels on Middle Mesa and related public safety and road maintenance concerns?

- How would the alternatives affect visual resources in the area?

1.5.3 Issues Considered but Not Analyzed

CEQ regulations (40 CFR § 1501.7) state that the lead agency shall identify and eliminate from detailed study the issues that are not important or that have been covered by prior environmental review, narrowing the discussion of these issues in the document to a brief presentation of why they would not have a significant effect on the human or natural environment or providing a reference to their coverage elsewhere.

The following resources were identified by the Interdisciplinary Team during internal scoping as potential issues of concern that would not be significantly impacted or have been evaluated in previous analyses.

Native American Religious Concerns

Native American Religious Concerns were not identified as a potentially impacted resource. Existing published and unpublished literature was reviewed and BLM staff was consulted concerning the presence of Traditional Cultural Properties within the area of potential effect. No known Traditional Cultural Properties occur within the project area (USDI/BLM 2011*a*, page 32). The BLM/FFO contacted the Navajo Nation and Southern Ute Indian Tribe concerning the proposed Middle Mesa POD in May 2011. The Navajo Nation Historic Preservation Department Traditional Cultural Program determined that the project would have no impact to Navajo Traditional Cultural Resources (USDI/BLM 2011*a*, page 32).

Environmental Justice

There would be no measurable or disproportionate adverse impacts to minority or low income populations under the action alternatives. The PRMP/FEIS analyzed impacts to minority populations and determined that energy resources within the planning area are located with Rio Arriba and San Juan counties, which have disproportionately high minority or low-income populations compared to all of New Mexico. Resource development as proposed for the Proposed Action would provide jobs and government revenues that would directly or indirectly benefit these vulnerable groups (USDI/BLM 2003a, page 4-129). These impacts were also considered in the ROD for the PRMP/FEIS because development of natural gas resources on Middle Mesa are consistent with the RFDS for the RMP (USDI/BLM 2003*a*, page 4-5).

Invasive, Non-Native Species

Vehicles entering the project area have the potential to distribute and spread invasive, non-native plant species picked up from other areas. This issue is not analyzed in detail in this EA as invasive and noxious weed control is the responsibility of WPX Energy as outlined in the SUPO. COAs attached to the APDs and the stipulations applied to the construction of the water line and fluids management pits would require WPX Energy to implement best management practices during construction, drilling, and operation. WPX Energy would be required to monitor disturbed areas and treat any invasive, non-native species for the life of the project.

Federally Listed Threatened and Endangered Species

No federally listed species with the potential to occur in San Juan or Rio Arriba counties, or potential habitats for federally listed species, were observed within the proposed project area. No designated critical habitat for any federally listed species occurs within the proposed project area. The FFO reviewed

and determined that the Proposed Action alternative is in compliance with listed species management guidelines outlined in the September 2002 Biological Assessment (Consultation No. 2-22-01-I-389) (USDI/BLM 2002). No further consultation with the U.S. Fish and Wildlife Service (USFWS) is required.

2. ALTERNATIVES INCLUDING THE PROPOSED ACTION

2.1 Alternative A—No Action

The BLM NEPA Handbook (USDI/BLM 2008*b*) states that for EAs on externally initiated proposed actions, the No Action Alternative is generally to reject the proposal or deny the application. This option is provided in 43 CFR § 3162.3-2 (h)(2). This alternative would deny approval of the APDs and Sundry Notices. Current land and resource uses would continue to occur in the proposed project area. The No Action Alternative provides a useful baseline for comparison of environmental effects (including cumulative effects) and demonstrates the consequences of not meeting the need for the action.

2.2 Alternative B—Proposed Action

WPX Energy is proposing to drill seven horizontal wells on four well pads, construct two fluid management pits, and a subsurface waterline.

The Proposed Action would develop the Rosa Unit 03, 04, 05, and 06 well pads and establish a water management system in San Juan and Rio Arriba counties, New Mexico. A vicinity map is provided as Figure 2-1. Horizontal drilling would be utilized to maximize natural gas extraction from the Basin Mancos pool in the Rosa Unit, while minimizing surface disturbance. Surface disturbance would be minimized by drilling multiple wells from single well pads and by utilizing existing well pad locations. The water management system would consist of two fluids management pits and a subsurface water line, which would extend west from Rosa Mesa, bore under Navajo Lake, and then terminate on Middle Mesa. The Proposed Action is shown in detail on Figure 2-2. All surface disturbance associated with the Proposed Action would be located on lands administered by the BLM/FFO. Figure 2-3 shows the land status for the Proposed Action.

All areas of proposed surface disturbance were inspected in the field by the BLM/FFO to ensure that potential impacts to natural resources would be minimized. On site evaluations were conducted on June 8 and September 22, 2011, and January 13, 2012.

WPX Energy has submitted APDs to develop at least one well per well pad as part of this Proposed Action. Subsequent APDs would be submitted to the BLM for any additional wells drilled from the four well pads. Any additional environmental impacts would be analyzed upon receipt of each additional APD. Drilling additional wells from the four well pads in the future would not result in any new surface disturbance. In the future, up to 20 wells could be drilled on the proposed Rosa Unit 04 well pad to determine the resource extraction volumes, to refine drilling and completion techniques, and obtain additional data. These 20 wells could be drilled to four separate horizons (five wells per horizon) of the Mancos Shale Formation. The actual well number drilled would be dependent upon several factors including natural gas prices, the resource availability, the effectiveness of resource extraction, and BLM approval.

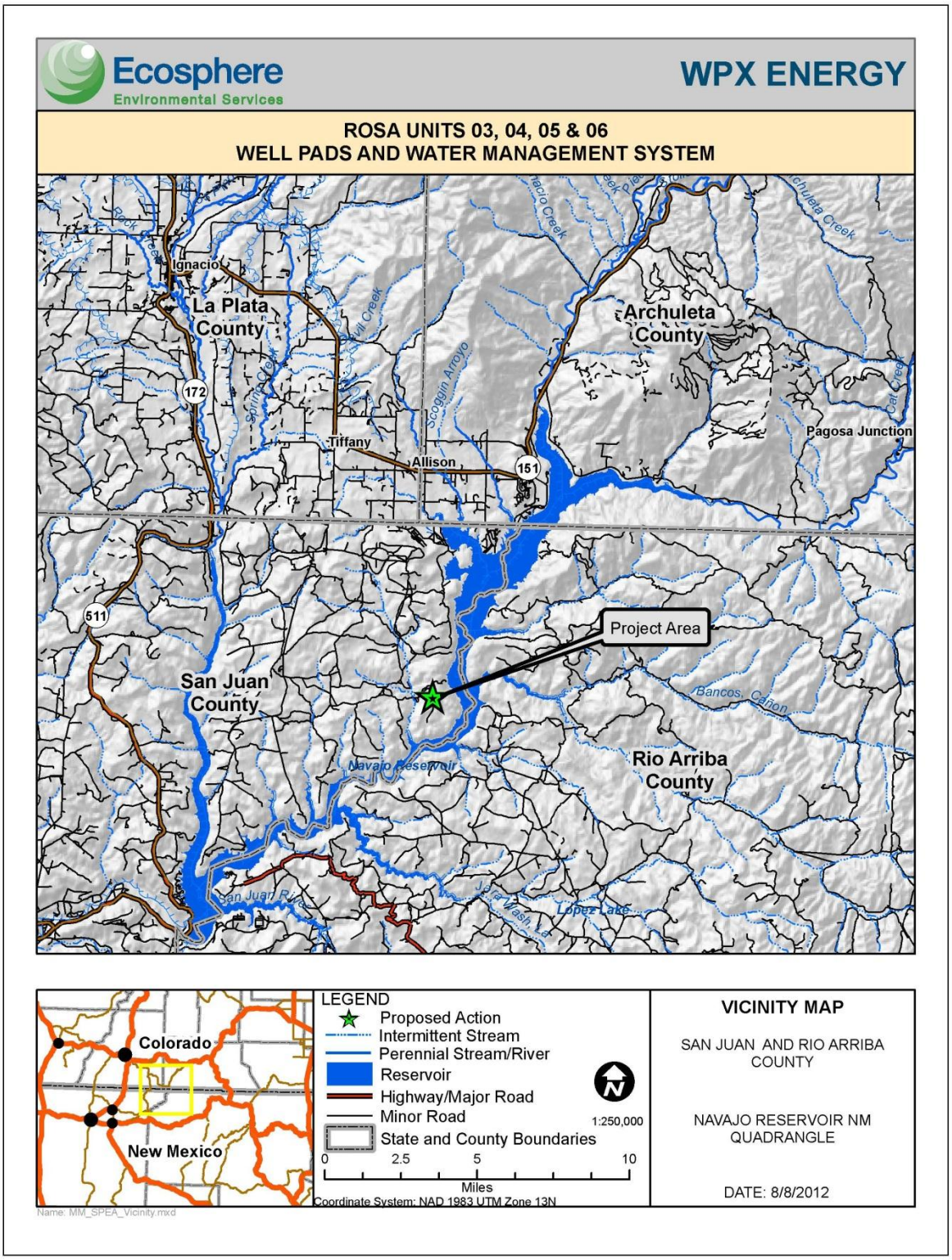

Figure 2-1. Rosa Unit 03, 04, 05, and 06 natural gas well pads and water management system.

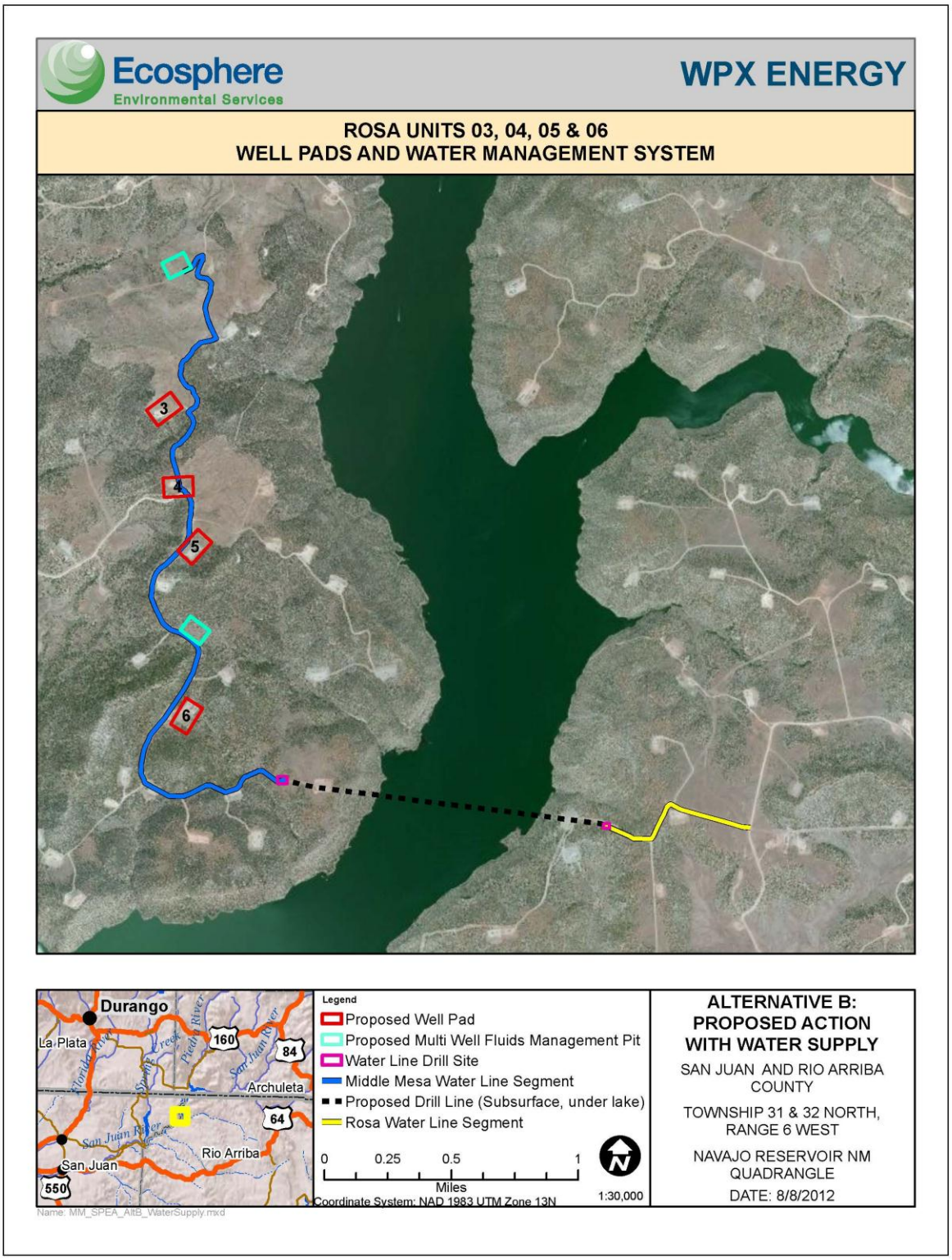

Figure 2-2. Alternative B project area map.

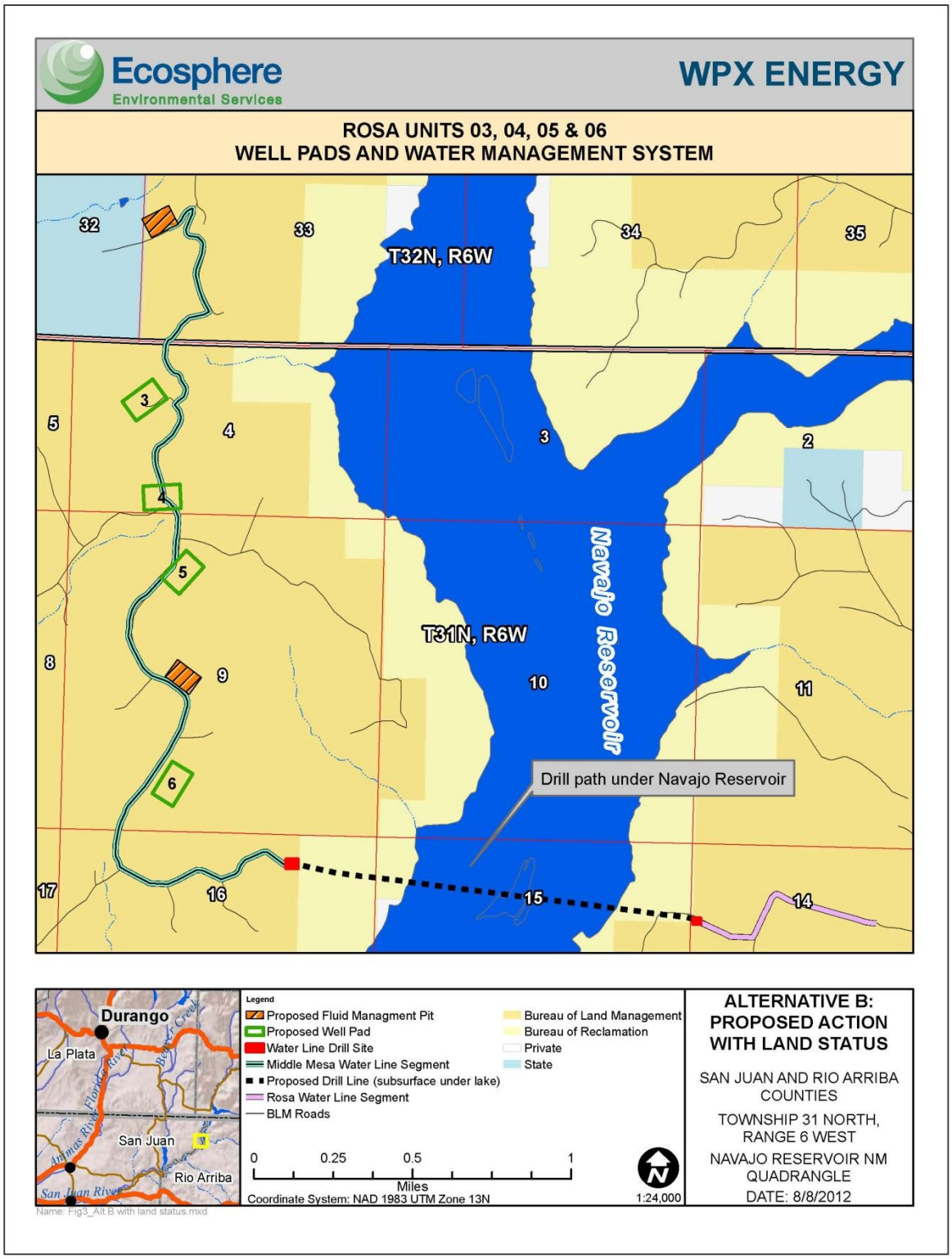

Figure 2-3. Land status of the Proposed Action components.

The components of the Proposed Action are discussed in detail in the sections below. A summary of the surface disturbance associated with the Proposed Action is discussed in Section 2.2.5. WPX Energy would comply with all applicable federal, state, and local laws and regulations, and obtain all necessary permits for the Proposed Action.

Table 2-1 below lists the timing of activities that would occur during construction, drilling, and completion of each well in relation to the SDA winter closure. The BLM/FFO approved WPX Energy's request for a modification to the winter closure under certain terms and conditions (USDI/BLM 2011*a*).

Table 2-1. Timing of the Proposed Action activities in relation to the Middle Mesa Specially Designated Area seasonal closure.

Activity	Conducted between November 1 and March 31 (winter closure)
Well Pad Construction	No
Water Line Construction	No
Fluid Management Pit Construction	No
Installation of Completion Equipment	No
Well Drilling	Yes
Stimulation/Completion	No
Reclamation	No

2.2.1 Well Pad Construction and Drilling

All wells proposed for a single well pad would be drilled consecutively. Drilling is proposed to occur during the Middle Mesa Wildlife SDA winter closure as authorized by the Middle Mesa POD and Decision Record (USDI/BLM 2011*a*). The wells, their location, and the well pad dimensions included under this proposal are listed in Table 2-2. Proposed well pad plats are provided in the APDs in Appendix C.

Table 2-2. Natural gas wells proposed for drilling under Alternative B.

Pad Number	Well Number	Location	Maximum Cut and Fill (feet)	Pad Size (feet)	Disturbance (acres)
03	007H	Section 4, Township 31 North, Range 6 West	11 feet fill 8 feet cut	400 x 630	**5.785**
04	001H 002H 005H 008H	Section 4, Township 31 North, Range 6 West	2 feet fill 10 feet cut	400 x 615	**5.65**
05	014H	Section 9, Township 31 North, Range 16 West	10 feet fill 19 feet cut	400 x 615	**5.65**
06	014H	Section 9, Township 31 North, Range 16 West	8 feet fill 12 feet cut	400 x 630	**5.785**
				Total Disturbance	**22.87**

A single rig would be used for drilling operations. If needed, the rig would be moved once between well pads during the winter closure, between December 1 and March 31, and the move distance would not exceed 1.5 miles. WPX Energy is proposing to commence drilling in 2013.

Each pad would be co-located with existing disturbance; therefore, no new access roads would be required for drilling. Construction activities associated with the Proposed Action alternative would include well pad construction, drilling, stimulation and completion of the natural gas wells, and the installation of any surface equipment necessary for natural gas production. At each well pad, construction crews would remove vegetation and the existing pad would be expanded. Well pad construction would not occur between December 1 and March 31. Cuts and fills would vary between the four proposed pads as shown on the plats in Appendix C. Excavated materials from the cuts would be used on the fill portion of the location to level the pad. Clearing and leveling is needed to provide a level surface for rig and equipment access and drilling. Included in the pad construction would be excavation of a 300-foot by 75-foot cuttings pit. There would be no blow pit; instead a stack flare would be used to burn excess gas during drilling to relieve wellbore pressure.

Natural gas well drilling facility assembly would occur on the well pad after site clearing and leveling. Drilling equipment located on each drilling pad would include: the drilling rig and associated equipment (e.g., blowout preventer, gas buster), pipe storage, and four housing trailers for personnel staying on site.

Some pipe would be stored on location, but given the amount of pipe needed to drill all wells proposed for one pad, additional pipe would need to be stored on a nearby existing location. Pipe stored on nearby locations would be trucked to the location during drilling on an as-needed basis.

Drilling operations would utilize water-based mud for the surface and intermediate hole and oil-based mud for the horizontal lateral. Water-based cuttings would be disposed of on site in a temporary pit. The cuttings are left in the pit, which is then closed according to NMOCD Rule 17, commonly referred to as the “pit rule.” For closure, 4 feet of cover is placed on the pit and then reclaimed according to applicable rules of the respective surface management agency.

A closed-loop system would be used for the oil-based mud. Oil-based cuttings would be hauled to a commercial disposal facility or land farmed on private surface. Approximately three loads a day for 5 days (total 15 loads) of cuttings per each well drilled would be transported by truck off site. Each load would be transported in 14 cubic-yard roll-off containers. Cuttings would be transported during daylight hours during the winter closure period.

After well pad construction, all flowlines and production equipment for the proposed wells, as well as potential future wells, would be installed. No additional surface disturbance would occur from the construction of flowlines or other completion equipment installation.

2.2.2 Stimulation Activities

Stimulation (i.e., hydraulic fracturing or “fracking”) is a process used to maximize the extraction of underground resources by allowing oil or natural gas to move more freely from the rock pores to production wells that bring the oil or gas to the surface. Fluids, commonly made up of water (99 percent) and chemical additives (1 percent), are pumped into a geologic formation at high pressure during

hydraulic fracturing (USEPA 2004). When the pressure exceeds the rock strength, the fluids open or enlarge fractures that can extend several hundred feet away from the well. After the fractures are created, a propping agent (usually sand) is pumped into the fractures to keep them from closing when the pumping pressure is released. After fracturing is completed, a portion of the injected fracturing fluids returns to the wellbore and is recovered for future fracturing operations (USEPA 2004).

Hydraulic fracturing would not occur during the winter closure period. Well stimulation equipment would be located on the proposed fluids management pits. Additionally, produced water would be stored on the proposed fluids management pits in holding ponds for use during hydraulic fracturing. Each fluids management pit location would be approximately 350 feet by 500 feet in dimension with a 50-foot-wide construction zone around the perimeter, for a total disturbance of about 12.4 acres. Each holding pond would be 300 feet by 450 feet and 30 feet deep. Total volume would be 65 acre-feet (ac-ft) with a usable storage volume of 56 ac-ft. Refer to Figure 2-2 for the location of the fluids management pits.

The holding ponds are governed by NMOCD's Rule 17. Storage in excess of 10 ac-ft is not permitted under the rules without an exception, which requires a hearing. If a single water holding pond on a fluid management pad cannot be permitted with the state, two ponds each with a 10 ac-ft capacity would be constructed on the proposed location. No additional surface disturbance would occur. The holding ponds would be lined, netted, fenced, and monitored for leak detection.

WPX Energy would use produced water from existing wells to conduct hydraulic fracturing. The use of produced water in drilling fluid is authorized under New Mexico State Regulation (NMAC 19.15.2.52). The water would be produced by existing wells in the Mesa Verde/Dakota and Fruitland coal formations. Produced water used for hydraulic fracturing would be recycled and used for multiple stimulations. Produced water would be filtered before entering the holding pond. Produced water in the holding ponds may be treated or aerated to minimize bacteria growth. Fracturing chemicals are added at the wellbore at the time the stimulation is pumped. The chemicals are added to the pumped stimulation fluid at the fluids management pit locations. Chemicals for fracturing would not be added to the holding ponds.

Two aboveground pipelines would be temporarily installed to transport water from the fluids management pits to the well being completed for well stimulation. Stimulation pumping would be conducted adjacent to the holding pond and pumped to the individual wells via two steel 4.5-inch welded pipelines. To recycle the produced water, one additional aboveground pipeline would transfer flowback water back to the holding pond on the fluids management pit. At that point, the flowback water would be filtered and returned to the/a holding pond for reuse in subsequent stimulations. The aboveground stimulation and flowback lines would be installed in or adjacent to existing disturbance. The three temporary lines would be removed following all well stimulation activities.

Green completion technology would be used. Green completions take place during the flowback stage of the completion. The flowback involves removing the water necessary to stimulate the well. During this flowback, natural gas is produced with the water. What makes the well completion "green," or environmentally friendly, is that the gas is separated from the water and placed in a pipeline for sales instead of being released to the atmosphere.

2.2.3 Water Management System

WPX Energy proposes to utilize produced water gathered from existing wells on Middle Mesa and on the east side of Navajo Lake for well stimulation. Water from wells on Middle Mesa would be trucked to the holding ponds on the proposed fluids management pit locations while water from the east side of the lake would be transported via a proposed liquid gathering system.

WPX Energy proposes to bore under Navajo Lake and construct a water line to transport produced water from Rosa Mesa to Middle Mesa. The sub-surface water line would transport the produced water from an existing liquid gathering system on Rosa Mesa to the proposed fluids management pits. The water line location is shown on Figure 2-2. Following all completion activities on Middle Mesa, the water line would be converted to a liquid gathering system which would transport produced water from Middle Mesa to a disposal facility on Rosa Mesa. The proposed water line would be located within:

Sections 14, 15, 16, 9, and 4, Township 31 North, Range 6 West

Section 33, Township 32 North, Range 6 West

The water line would be approximately 5.15 miles (27,217 feet) in length as shown on survey plats in Appendix D. The majority of the proposed water line would be constructed within existing roads or pipeline rights-of-way (ROWs) minimizing new disturbance. These sections of the line would be constructed within a 30-foot-wide corridor outside the winter closure period. Two sections of the line, totaling approximately 2,894 feet, would be constructed cross-county resulting in about 2.65 acres of new disturbance. The cross-country segments would require a 40-foot-wide corridor to provide for access road construction. The two cross-country segments were designed to avoid impacts to natural resource concerns. Approximately 700 feet (0.3 acre) of existing road would be closed and reclaimed due to natural resource concerns. As a result, approximately 875 feet of new road would be realigned in Section 6, Township 31 North, Range 6 West. Approximately 0.8 acre of new disturbance would occur from road realignment.

According to the survey plats, approximately 6,925 linear feet of the proposed pipeline would be installed under Navajo Reservoir to connect the water line segments on the eastern and western sides of Navajo Lake. To reach the appropriate depth, the actual length of the bore would be longer. The water line in the bore would be a 6-inch steel with 40 mil fusion bond coated pipe connecting to poly-pipe on each side of Navajo Lake. The bore would be drilled at a depth of 150 feet below the true lake bed of the reservoir. The true lake bed is defined as the original river bottom located below the silt layers. The silt layer on top of the original river bottom is estimated at 30 feet. Existing cathodic protection wells in the area would provide geo-technical data for the bore drilling.

To drill under Navajo Lake, the entry point would be located on Middle Mesa adjacent to the road between the existing Rosa Unit No. 274 and the Rosa Unit No. 208Y. This site would be approximately 150 feet by 200 feet (0.69 acre) in size. After drilling operations, valves, a pigging system, automatic emergency shut-off system, generator, transfer pump, and two 500 barrel (bbl) tanks would remain on the site, which would be reclaimed to an approximately 50 by 75 feet (0.086 acre) area. The exit point on the west side of the lake would be adjacent to the road accessing the existing Rosa Unit No. 12. This area

would be approximately 100 feet by 125 (0.29 acre) and upon completion of operations would be the same size and support the same equipment as the entry site on Middle Mesa.

The eastern and western water line segments would be installed at the same time the pipeline is installed under Navajo Reservoir. Water line construction is expected to take approximately 10 weeks to complete.

Sub-surface water line construction would follow a general sequence. Where the water line would be constructed in existing roads, the work area would be prepared and trenching operations would begin with a ditching machine and/or backhoe. Clearing of cross-country areas would be confined to the minimum area required for construction. Vegetation clearing would consist of knocking (scalping) off the tops of brush to ground level with a motor-grader, dozer, or brush hog, wherever possible, to preserve plant root systems. Grass cover or low growth would not be removed except immediately over the trench line, as required, to prevent a fire hazard from possible torch cutting or welding operations. Rocks, brush, and other woody material cleared from the work area would be windrowed or piled to one side within the work area for later use in reclamation or hauled off site to a pre-approved disposal site. The pipe would be buried in a trench approximately 4 feet deep by 2 feet wide. The trench spoil would be placed on the opposite side of the trench from the working side. Spoils would be contained within the water line construction work area.

Following trenching operations, pipe stringing activities would take place within the permitted work area. Pipe stringing consists of placing the pipe in the trench, bending the pipe to match bends in the trench, if necessary, and welding/gluing the pipe segments together. Before laying the pipe in the trench, selected fill material would be used to pad the bottom of the trench to protect the pipe where rocks could potentially threaten the integrity of the pipe. Select fill material would be used to pad around and above the pipe before the trench is backfilled. Backfilling would be completed using the spoil previously excavated during the trenching process. The ditch would be compacted as much as possible over the pipe during the backfilling stage.

Construction of the bore entry and exit point would remove topsoil, vegetation, and create level pads at each location. Topsoil would be stockpiled and stored within the construction zones for use in reclamation.

Installation of a pipeline by horizontal directional drilling is generally accomplished in three stages. The first stage consists of directionally drilling a small diameter pilot hole along a directional path. The second stage, prereaming, involves enlarging this pilot hole to a diameter suitable for installation of the pipeline. The third stage consists of pulling the pipe back through the enlarged hole. A representative detailed description of the process is provided in Appendix E. The drilling fluid used for the bore would be composed of bentonite (clay).

After backfilling has been completed and prior to being placed in service, the water line would be pressure tested to ensure structural integrity. The line would be hydrostatically tested in accordance with federal, state, and local regulations. After the pressure test, the pipe would be repaired, if necessary. If repairs are necessary, a second test would be conducted.

2.2.4 Pipelines

Following completion, pipelines would be constructed to connect the new wells to existing gathering pipelines. Pipelines are expected to be minimal in length and constructed within the proposed well pad disturbance. Existing regional gathering systems, not owned or operated by WPX Energy, are already in place within the Rosa Unit. The current pipeline capacity and the system's ability to handle future produced gas volumes resulting from the Proposed Action are unknown at this time. Additional pipeline capacity may be needed in the future and would be designed (e.g., pipe and easement size, length, etc.) by the pipeline owner/operator and permitted separately from this action. If any additional gathering lines are needed in the future to transport gas produced by the new wells to regional transmission lines, these pipelines would likely be routed to minimize any new surface disturbance, and would be expected to follow existing roads and ROWs. ROWs in the Middle Mesa Wildlife Area SDA are permitted on a case-by-case basis and would be subject to NEPA analysis and review.

2.2.5 Reclamation

The proposed well pads would be partially reclaimed following drilling operations, as WPX Energy would install production facilities on the site before drilling commences. A portion of the pad not required for production equipment and vehicular access would be re-contoured and seeded per the BLM/FFO COAs. Approximately 1 acre for production facilities on each well pad would remain in use for production and vehicle access. These areas would not be reclaimed until final abandonment of the wells. Production equipment that would remain on site would include the wellheads, production unit separators, and meter runs. Ancillary equipment could also be installed at the well pad site, such as a Christmas tree, storage tank(s), dehydrator, and separator. No well head compression is expected.

The two fluids management pits would be completely reclaimed when all drilling activities have been concluded. The water line project, with the exception of the road realignment, would be reclaimed following installation. Areas not needed for permanent equipment placement or the operation on the drill bore entry/exit locations would be reclaimed. During reclamation, the disturbed surface would be restored to near original land contours. The areas would be reseeded with an approved BLM seed mix. For the water line constructed within existing roads, grading and compacting would repair the disturbed roadways to better than, or equal to, preconstruction conditions.

2.2.6 Work Force and Transportation

The drilling process would require activity on the well pad virtually around the clock, 7 days a week. WPX Energy proposes to provide a work force residential camp on private lands for its employees, approximately 0.5 linear mile west of the Rosa Unit boundary on Middle Mesa. During the winter closure period, approximately two vehicle trips per day would be needed to transport workers to and from the drilling pad. Except for emergency situations and one shift change per day, all vehicle traffic would be restricted to daylight hours.

Approximately 15 individuals would be working on the pad during drilling operations. Four of these individuals, the company man, toolpusher, mudlogger, and measurements-while-drilling field engineer, must live on the pad location since they are on-call 24 hours a day. The remaining individuals would

work 12-hour shifts, 7 days on and 7 days off, and would be considered non-residents to the rig. These workers usually commute to and from the site daily. All residential camp facilities would be designed and constructed in compliance with federal, state, and local regulations.

At shift changes, workers would be transported to and from the residential camp by high-capacity vehicles such as a bus or large van. During the winter restriction period, WPX Energy would require those occupying the camp during non-work hours to restrict their excursions outside of the camp boundaries. Once per week, this same high-capacity vehicle would be utilized to make crew changes, since the non-residents would be working 7 days on and 7 days off schedules.

2.2.7 Summary of Disturbance—Alternative B

The Proposed Action would result in a total (short-term) surface disturbance of 59.1 acres for the four proposed well pads and water management system. Approximately 4.5 acres of long-term disturbance for well operation and maintenance would result from the Proposed Action. The BLM defines long-term impacts as those impacts whose results endure more than 5 years. All four proposed well pads would be co-located with existing well pads, thereby utilizing existing disturbance. The majority of the proposed water line would be constructed within existing roads. Total new disturbance for the entire action would be 26.1 acres. There would be no surface disturbance associated with the aboveground surface lines between the fluids management pit and the well pad where stimulation activities are occurring. Table 2-3 summarizes the surface disturbance associated with Alternative B.

Table 2-3. Summary of disturbance under Alternative B—Proposed Action.

Component	New Disturbance (acres)	Short-Term Disturbance (acres)	Long-Term Disturbance (acres)
Well Pads	11.0	22.9	4.0
Fluids Management Pits	12.4	12.4	0.0
Water Line Drilling Entry/Exit	0	0.4	0.2
Subsurface Produced Water Line/ Access Road Realignment	2.7	23.4	0.3 [1]
Grand Total Disturbance	**26.1**	**59.1**	**4.5**

[1] Resulting from road realignment

2.2.8 Design Features

Design features are an integral part of the alternatives. The environmental effects are analyzed assuming that design features are in place and are successful. For the action alternatives, standard and project-specific design features include but are not limited to:

1. Well drilling pads will be co-located to minimize surface disturbance, fugitive dust, and emissions. By using existing disturbance, there would be a reduction in vehicle/heavy equipment emissions and fugitive dust during construction activities as no new locations would be built.
2. Horizontal drilling of multiple wells from one well pad will minimize the amount of surface disturbance, fugitive dust, and emissions.
3. Only one rig will be used for drilling operations between December 1 and March 31.

4. If needed, only one rig move will be made between December 1 and March 31, and will not exceed 1.5 miles. WPX Energy will plan drilling activities to avoid moving the rig during the winter closure to the extent practicable. A rig move would happen no more than once per winter.
5. The drilling rig will use natural gas-powered engines and is self-moving between well bores (i.e., does not require multiple trucks or other vehicles to move between well bores drilled on the same pad). Use of natural gas-powered engines will result in less air and noise emissions.
6. Stimulation activities will not be conducted between December 1 and March 31.
7. Fluids management pits will be constructed to minimize surface disturbance.
8. Produced water will be used for well stimulation and will be recycled (i.e., any flowback would be pumped back to the holding pond, filtered, and used in subsequent stimulations).
9. Pipelines from the well stimulation pads will be located in or adjacent to existing roads or ROWs and will be temporary, aboveground steel welded lines.
10. The holding ponds will be in compliance with NMOCD Rule 17.
11. The holding ponds will be lined, netted, and fenced to restrict access. An automatic leak detection system will be installed.
12. Green completion technology will be used.
13. A closed-loop system will be used for the oil-based mud to minimize potential impacts to surface and groundwater quality. A 4-ounce geotextile pad, a 30-mil reinforced liner, followed by an 8-ounce geotextile pad covered with approximately 12 inches of gravel will be laid down under the rig mats and all drilling machinery.
14. A residential camp will be utilized to reduce truck traffic to the drilling rig.
15. Workers will be transported to and from the residential camp by high-capacity vehicles to minimize vehicle traffic. Workers schedules will be 12-hour shifts, 7 days on and 7 days off to minimize vehicle traffic. Workers occupying the residential camp during non-work hours will restrict their excursions outside of the camp boundaries.
16. Except for emergency situations and one shift change per day, all vehicle traffic will be restricted to daylight hours.
17. Well data collection will be conducted utilizing telemetry.
18. All field activities will comply with BLM/FFO road use guidelines.
19. Those areas not needed for access and production would be reseeded with the BLM/FFO seed mix upon completion of all wells on each pad. The fluids management pit would be entirely reclaimed following completion of stimulation.
20. To slow runoff velocities and minimize sediment transfer, silt traps will be installed in the eastern construction zone of Rosa Unit 04 and the southeastern corner of Rosa Unit 05.
21. Culverts will be installed as needed and drainage will be diverted from the site at reclamation.
22. Drilling from the proposed four well pads would be required to meet the noise stipulations outlined in the Notice to Lessee (NTL) 03-1.
23. WPX Energy would be required to monitor disturbed areas and treat any invasive, non-native species for the life of the project.
24. During drilling, stimulation, and completion, a trash receptacle and a chemically treated portable toilet will be on location for trash and sewer disposal.
25. All wastes will be disposed of in a proper manner as required by federal and state law and as described in the COAs.

26. Any spills will be promptly cleaned up and WPX Energy will maintain a plan to cover any accidental release of hazardous materials.
27. The top 6 inches of soil will be stockpiled during well pad construction and drilling, and then respread during interim reclamation.
28. The construction zone will be recontoured and reclaimed following well drilling.
29. Disturbed areas will be seeded with a BLM seed mix as outlined in the COAs.
30. Smaller logs and trees (i.e., less than 6 inches in diameter) removed during construction will be chipped or mulched and incorporated into topsoil, along with all slash, as additional organic matter during reclamation.
31. All production equipment will meet BLM/FFO visual requirements.
32. All aboveground structures not subject to safety requirements shall be painted to blend with the natural color of the landscape. A reflective material may be used to reduce hazards that may occur when such structures are near roads.
33. On the Rosa Unit 05, a silt trap will be installed at reclamation in the southeast corner with others installed as needed. On the Rosa Unit 06, a silt trap will be installed at reclamation in the southeast corner with others installed as needed. On all proposed pads, drainage will be restored at reclamation. Silt traps will be installed as needed. Culverts will be installed as needed.
34. All FFO/BLM cultural resources stipulations will be followed as indicated in the Cultural Resource Records of Review attached to the APDs. These stipulations may include, but are not limited to, temporary or permanent fencing or other physical barriers, monitoring of earth-disturbing construction, project area reduction and/or specific construction avoidance zones, and employee education.
35. All employees of the project, including the project proponent and its contractors and sub-contractors, will be informed that cultural sites are to be avoided by all personnel, personal vehicles, and company equipment. They will also be notified that it is illegal to collect, damage, or disturb cultural resources, and that such activities are punishable by criminal and/or administrative penalties under the provisions of the Archaeological Resources Protection Act.
36. In the event of a discovery during construction, the project proponent will immediately stop all construction activities in the immediate vicinity of the discovery and immediately notify the archaeological monitor, if present, or the BLM.

2.3 Alternative C

Under Alternative C, WPX Energy would directionally drill 22 wells from six well pads.

WPX Energy would develop the Middle Mesa portion of the Rosa Unit consistent with the existing lease rights and current NMOCD spacing requirements. WPX Energy would develop the Basin Mancos pool at 40-acre spacing in the project area using vertical/directional (non-horizontal) drilling. No construction or drilling would occur during the Middle Mesa Wildlife SDA winter closure. Standard COAs and any additional mitigation measures identified during the on-site evaluations would be implemented.

The relationship between a horizontal well and directional/vertical well is not one-to-one in terms of formation contact or volumetric extraction. Specifically, under the Proposed Action (Alternative B), the

purpose-built rig would drill downward generally in a vertical direction to the target formation (point of entry) at which point the drill bore would extend horizontally across the formation for a distance of up to 7,000 feet. This consistent contact with the formation is what allows for greater natural gas extraction. Under Alternative C, however, existing rigs from the San Juan Basin fleet would be used to vertically/directionally drill to the target formation. With directional drilling, the drill bore crosses the formation on a nearly vertical plane mainly encountering the vertical extent of the producing formation. Figure 2-4 illustrates the difference in horizontal well and vertical/directional bores. To date, no reservoir drainage areas in excess of 10-acres have been observed by WPX Energy in Rosa Unit vertical Basin Mancos wells.

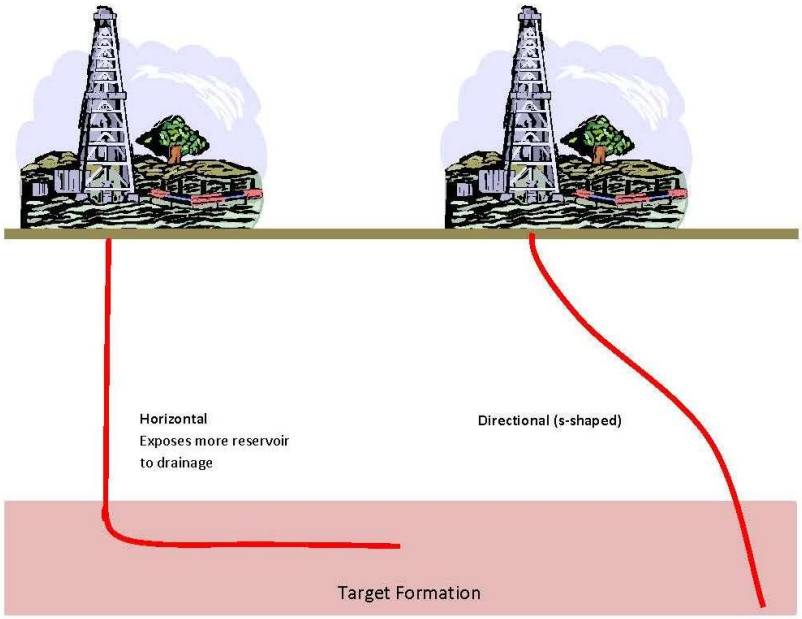

Figure 2-4. Comparison of vertical/directional and horizontal well bores.

Additionally, with the adoption of Order No. R-13499, Case No. 14744, by the Oil Conservation Commission, the spacing of horizontal versus vertical wells complicates direct comparison (refer to Section 1.1). A horizontal well is not confined to a single spacing unit when drilled within a designated Project Area, whereas a vertical well is confined to 8 wellbores per 320 acre spacing unit. The pool rules for vertical development restrict the number of wells that can be drilled in a spacing unit and also restrict their location according to setback requirements.

Taking these issues into account, WPX Energy developed a projected number of wells/pads needed for comparison with Alternative B, based on extracting natural gas resources from the same area. The projected development assumed that existing pads on Middle Mesa have an average of two wells on location. It was also assumed that four directional wells per pad could be drilled from one existing location. Current technology limits directional drilling to a reach of 1,500 feet.

Under Alternative B, the seven proposed horizontal bores transect a total of 31 quarter-quarter sections. Each quarter-quarter section correlates to a 40-acre spacing unit where one vertical/directional Basin Mancos well could be drilled. However, of the 31 40-acre spacing units, five would not be accessible

under Alternative C given the 1,500-foot drill reach and setbacks from Navajo Lake. Additionally four of these units have already been developed. Therefore, under Alternative C, 22 wells at 40-acre spacing could be developed using vertical/directional drilling. Because it is assumed that all well pads could be twinned with existing locations and that up to four wells could be drilled from one well pad, six well pads would be needed under Alternative C to attempt to access the same reservoir area as Alternative B (Figure 2-4).

However, under current spacing orders and due to different extraction techniques, Alternative C would drain approximately 25 percent of the natural gas volume as compared to the amount drained under Alternative B. This assumption is based on data acquired from previously drilled vertical and horizontal Mancos wells in the Rosa Unit. The exact surface locations of well pads under Alternative C cannot be determined at this time, as that would require extensive on-the-ground surveying and analysis.

Based on previous development, the total surface disturbance associated with each well pad would be about 4.29 acres. After interim reclamation, approximately 0.43 acre of long-term disturbance remains for well operation for the first well. Given a 50-foot surface offset between each well head on a location, each additional well would result in 0.16 acre of long-term disturbance. Assuming that an average of two wells are located on each existing location, the four new Mancos vertical/directional wells would result in approximately 1.23 acres of long-term disturbance per well pad. Refer to Table 2-4 for a summary of disturbance under Alternative C.

2.3.1 Well Drilling

Each well pad would be approximately 240 feet by 450 feet in dimension with a 50-foot-wide construction zone around the perimeter of the pad for a total of 4.29 acres of disturbance. Construction activities associated with Alternative C would include well pad construction, drilling, stimulation, and completion of the proposed natural gas wells, and the installation of any surface equipment necessary for natural gas production. Construction crews would remove vegetation from the proposed location, and the existing pad would be expanded. Cuts and fills would vary based on the topography at each location. No site-specific locations have been identified for this analysis. Clearing and leveling would be needed to provide a level surface for rig and equipment access. Excavated materials from the cuts would be used on the fill portion of the location to level the pad. Included in the pad construction would be excavation of a 75-foot by 300-foot reserve pit.

After site clearing and leveling, a diesel-powered rig from the current San Juan fleet would be utilized. Drilling equipment located on each drilling pad would include: the drilling rig and associated equipment, pipe storage, and housing trailers.

Drilling operations would utilize water-based mud. Water-based cuttings would be disposed of on site in a temporary pit.

2.3.2 Stimulation Activities

Hydraulic fracturing (stimulation) would occur under both action alternatives. A description of hydraulic fracturing applicable to both action alternatives is provided in Section 2.2.2. The process would be the

same for both action alternatives, except that Alternative C would differ in the water source and location of equipment used.

Under Alternative C, well stimulation equipment would be located on site rather than a central off-site location. WPX Energy would purchase fresh water from a decreed source and it would be trucked to the site and stored in tanks on each well pad where stimulation would be occurring. Approximately 20 to 24 500-bbl tanks would be needed on site to store water for stimulation. Water would be pumped from the tanks to the well bore via temporary aboveground flow lines. Any flowback would be recycled back to the storage tanks for use in multiple stimulations. Other equipment needed for stimulation would include pumps, engines, and flow lines. This equipment would be located on the well pad where stimulation is occurring.

Workforce

There would be no difference in the number of employees between the two action alternatives. However, under Alternative C, workers would commute on a daily basis to and from the drill site from Aztec, New Mexico.

2.3.3 Reclamation

The well pads would be partially reclaimed following drilling operations. A portion of the pad not required for production equipment and vehicular access would be re-contoured and seeded per the site-specific COAs determined by the BLM/FFO. Approximately 0.64 acres on each well pad would remain in use for production facilities and vehicle access. These areas would be reclaimed after final abandonment of the wells. Production equipment that would remain on site would include the wellheads, production unit separators, and meter runs. Ancillary equipment such as a Christmas tree, storage tank(s), dehydrator, and separator could also be installed at the well pad site. Equipment would be powered by gas compression engines.

2.3.4 Summary of Disturbance—Alternative C

No construction or drilling would occur during the Middle Mesa Wildlife SDA winter closure period. Alternative C would result in a total (short-term) surface disturbance of approximately 25.74 acres. All six well pads would be twinned with existing well pads, thereby utilizing existing disturbance. Approximately 3.84 acres of long-term disturbance for well operation and maintenance would result from Alternative C. Table 2-4 summarizes the surface disturbance associated with Alternative C.

Table 2-4. Summary of Disturbance under Alternative C.

Component	New Disturbance (acres)	Short-Term Disturbance (acres)	Long-Term Disturbance (acres)
Well Pads	7.7	25.7	3.8

2.4 Alternatives Considered but Eliminated from Further Analysis

Four alternatives, or components of alternatives, were considered but eliminated from further analysis. In order to store sufficient drilling pipe on the well pad, additional area would be needed for a minimum of

10, 40-foot by 50-foot pipe racks. Each well pad would have to be expanded by approximately 100 by 300 feet. This expansion would have resulted in approximately 1 acre of additional surface disturbance per well pad. Due to steep topography, which would require substantial cuts and fills, and other natural resource concerns, this alternative was eliminated from further analysis.

Another alternative considered was using aboveground steel storage tanks for produced water rather than the fluid management pits. Tanks available on the market today are constructed of galvanized steel with a one-piece membrane liner. The maximum storage in available tanks would be less than 10-ac-ft (3,129,000 gallon capacity with 12-inch freeboard). The tank itself would require a 300-foot by 300-foot footprint. Therefore, the tank location would have to be expanded in order to have the pumping equipment on site, resulting in a much larger disturbance area. Also, the aboveground tank would be required to have secondary containment in case of a spill. The secondary containment would consist of a 2-foot-high bermed area around the tank capable of containing all fluid in the tank. Construction of an adequate secondary containment structure would require a substantial footprint based on the tank storage capacity and current spill containment regulations. Any aboveground storage tank would also have a potential high spill incident rate because of the number of valves and seams that could leak and due to potential wall integrity failure. Also, costs associated with this alternative would be prohibitive. This alternative was eliminated from further analysis as (1) it would not provide sufficient storage, (2) the amount of surface disturbance would increase four to five times more than the Proposed Action, (3) the potential for spills or leaks would be greater, and (4) the increased cost would be prohibitive.

Initially, WPX Energy contemplated using water from the Entrada Formation for stimulation activities. WPX Energy would have drilled a water well to the formation to supplement produced water volumes generated from existing wells on Middle Mesa. The Entrada Formation is not a freshwater-bearing aquifer. The water well would have been located in the NW ¼ of Section 8, Township 31, North, Range 6 West in San Juan County, New Mexico. Approximately 10 wells have been drilled to the Entrada Formation within the San Juan basin. All of these were drilled for deep well injection (saltwater disposal). It is unknown what quantity of water may be produced by a well drilled to the formation. Given the cost of well drilling and the undetermined water volumes, this alternative would have presented an inherent risk with potentially unsuccessful results. Should the well be drilled and not produce sufficient water volumes, another option would have to be developed that would likely result in additional surface disturbance and associated costs. This alternative was eliminated from detailed consideration as it does not meet the purpose and need of the Proposed Action since its feasibility is uncertain and the results speculative.

An alternative using horizontal drilling 8 months of the year while observing the winter closure for the Middle Mesa Wildlife Area SDA was considered. WPX Energy's federal leasehold within San Juan County, New Mexico, is wholly contained within the winter closure area; therefore, drilling rig(s) remain idle during the 4-month (121 days) winter closure. Coupled with the revenue loss from having the purpose-built rig on standby for 4 months and the cost of moving the rig in and out the unit, this alternative was not considered economically viable. The Middle Mesa POD EA (USDI/BLM 2011*a*) evaluated the effects to wildlife, especially big game, from drilling multiple wells with one rig from a single well pad during the winter closure. The analysis concluded that there would be short-term direct and indirect impacts on deer and elk lasting roughly 5 years during initial construction, drilling, and completion of 53 horizontal wells and 14 vertical wells. Long-term impacts of the Proposed Action, after

5 years, would decrease slightly as some areas disturbed during the first 5 years recovered their value as wildlife habitat. These conclusions were supported by the following reasons: (1) less than 1 percent of the Middle Mesa Wildlife SDA would be affected; (2) habitat fragmentation would be minimized through the use of existing disturbance; (3) the area was characterized as having low wintering big game density with good browse availability; and (4) the effectiveness of specific design features (USDI/BLM 2011*a*, page 63). This alternative was eliminated from detailed consideration as it would not meet the purpose and need of the Proposed Action, and previous analysis determined that potential impacts from construction and drilling during the winter closure would not result in significant effects or population-level effects to big game in the Middle Mesa Wildlife Area SDA.

No other alternatives were identified that would result in fewer environmental impacts and still meet the purpose and need of the Proposed Action.

3. DESCRIPTION OF AFFECTED ENVIRONMENT

This chapter describes the environment that would be affected by implementation of the alternatives described in Chapter 2.0. Aspects of the affected environment described in this section focus on the relevant major resources or issues. Only the aspects of the affected environment that are potentially impacted are described.

For the purposes of this analysis, the proposed project area is considered the area where surface disturbance would occur, that is the four proposed well pads, the fluids management pits, bore entry/exit points, and water line construction corridor. These locations are discussed in detail in the following sections.

Pedestrian surveys of the proposed well pads and fluids management pit were conducted by Ecosphere Environmental Services (Ecosphere) on April 12, 2011. The proposed well pads and south fluids management pit were surveyed again on September 22 and October 12, 2011, during on-site investigations with the BLM/FFO and WPX Energy. The eastern water line segment was surveyed by Ecosphere on June 5, 2012. The north fluids management pit and western water line segment were surveyed by biologists from Nelson Consulting, Inc., on January 23, 2012. Cultural resource surveys were conducted by La Plata Archaeological Consultants (LAC) between March 3, 2011, and April 13, 2012.

Site-specific locations were not developed for Alternative C; therefore, no field surveys were conducted.

3.1 General Setting

Middle Mesa is a peninsular feature isolated by the Los Piños River on the west and the Navajo Reservoir San Juan arm to the east. The proposed well pads and fluids management pits would be located on the southeast portion of Middle Mesa an average of about 4,000 feet west of Navajo Reservoir San Juan arm and east of Cottonwood Canyon. The proposed water line would begin on the eastern extreme of Rosa Mesa crossing under Navajo Reservoir to Middle Mesa. The terrain within the area is characterized by eroded mesa tops and buttes with rocky terraced side slopes intertwined with narrow, deep canyons. Steep, sheer sandstone cliffs line the edge of Navajo Reservoir. Elevation within the project area ranges between 6,400 to 6,600 feet.

3.2 Air Resources

3.2.1 Air Quality

Air quality and climate are components of air resources that may be affected by BLM applications, activities, and resource management. Therefore, the BLM must consider and analyze the potential effects of BLM and BLM-authorized activities on air resources as part of the planning and decision-making process. The action alternatives would be located in San Juan and Rio Arriba Counties, New Mexico. Additional information on air quality in this area is contained in Chapter 3 of the PRMP/FEIS (USDI/BLM 2003*a*), which this analysis tiers to and incorporates. The PRMP/FEIS defines the region of influence for air quality for pollutants other than ozone as a few miles downwind from a source (USDI/BLM 2003*a*). Since there would be traffic associated with the action alternatives on paved and

unpaved roads in La Plata County, the region of influence for indirect air quality impacts associated with vehicular traffic emissions includes La Plata County. The region of influence for ozone includes the Four Corners area as defined in the PRMP/FEIS (USDI/BLM 2003*a*).

Much of the information referenced in this section is incorporated from the *Air Resources Technical Report for BLM Oil and Gas Development in New Mexico, Kansas, Oklahoma, and Texas* (herein referred to as Air Quality Technical Report; USDI/BLM 2011*b*). This document summarizes the technical information related to air resources and climate change associated with oil and gas development and the methodology and assumptions used for analysis.

3.2.1.1 Criteria Air Pollutants

The Air Quality Technical Report describes the types of data used for description of the existing conditions of criteria pollutants, how the criteria pollutants are related to the activities involved in oil and gas development, and provides a table of current national and state standards (USDI/BLM 2011*b*). The U.S. Environmental Protection Agency (USEPA) Green Book web page reports that all counties in the FFO analysis area, including San Juan, McKinley, Rio Arriba, and Sandoval Counties in New Mexico and La Plata County, Colorado, are in attainment of all National Ambient Air Quality Standards (NAAQS) as defined by the Clean Air Act. The area also does not violate any New Mexico Ambient Air Quality Standards (NMAAQS). The current criteria pollutant concentrations in the FFO analysis area are described below. Total emissions of criteria pollutants from each source sector were calculated by adding together the emissions from the four counties that are located in the FFO analysis area: San Juan, McKinley, Rio Arriba, and Sandoval.

Table 3-1 shows monitoring values for ozone in recent years for each of the three San Juan County ozone monitoring stations. There is no Colorado Department of Public Health (CDPHE), Air Pollution Control Division, Technical Services Program quality-assured and verified ozone monitoring station in La Plata County. The nearest CDPHE quality-assured and verified ozone monitoring station is located at Cortez, Colorado. Table 3-1 includes ozone monitoring values from the Cortez monitoring station.

Table 3-1. Ozone monitored values in the Four Corners Region.

State Air Monitoring Station	8-hour Ozone Design Value (ppm)			NAAQS
	2007-2009	2008-2010	2009-2011	2008
Substation, NM	0.067	0.063	0.063	0.075
Bloomfield, NM	0.061	0.060	0.061	0.075
Navajo Lake, NM	0.069	0.066	0.068	0.075
Cortez, CO		0.064	0.066	0.075

Source: NMED 2012

Key: NAAQS = National Ambient Air Quality Standards; ppm = parts per million.

Table 3-2 summarizes monitored values for other criteria pollutants in San Juan County. The primary impact to air quality associated with vehicle traffic on unpaved roads in La Plata County is particulate matter (PM). The nearest air monitoring station for PM near these roads is located at Navajo Lake in San Juan County, New Mexico; monitored criteria values in the region are included in Table 3-2.

Table 3-2. Criteria Pollutant concentration monitored values in San Juan County.

Pollutant	Range of Design Values	Averaging Time	Observation Period	NAAQS	NMAAQS
NO_2	7-16 ppb	Annual	2005-2010	53 ppb	50 ppb
NO_2	37-50 ppb	1-hour	2005-2010	100 ppb	
CO	4.6-10.6 ppm	1-hour	1990-2000	35 ppm	13.1 ppm
CO	1.7-5.2 ppm	8-hour	1990-2000	9 ppm	8.7 ppm
PM_{10}	15-116 [(1)] µg/m^3	24-hour	1990-2011	150 µg/m^3	150 µg/m^3 [(1)]
$PM_{2.5}$	4.3-6.6 µg/m^3	Annual	2000-2010	15 µg/m^3	60 µg/m^3 [(1)]
$PM_{2.5}$	10-15 µg/m^3	24-hour	2000-2010	35 µg/m^3	
SO_2	0.001-0.002 ppm	Annual	2005-2010		0.02 ppm
SO_2	5-40 ppb	1-hour	2008-2010	75 ppb	
SO_2	0.002-0.004 ppm	24-hour	2005-2010		0.10 ppm

Source: USDI/BLM 2011*b*

[1] maximum values

[2] 20.2.3 NMAC sets forth state standards for Total Suspended Particulates on a 24-hour average and annual average. Monitoring is conducted for PM_{10} and $PM_{2.5}$.

Key: µg/m3 = micrograms per cubic meter; CO = carbon monoxide; NAAQS = National Ambient Air Quality Standard; NMAAQS = New Mexico Air Quality Standard; NO_2 = nitrogen dioxide; ppb = parts per billion; ppm = parts per million; PM_{10} = particulate matter with an aerodynamic diameter equal to or less than 10 microns; $PM_{2.5}$ = Particulate matter with an aerodynamic diameter equal to or less than 2.5 microns; SO_2 = sulfur dioxide.

In 2005, the USEPA estimated that there was less than 0.01 ton per square mile of lead emitted in FFO counties, which is less than 2 tons total (USDI/BLM 2011*b*). Lead emissions are not an issue in this area and will not be discussed further.

Updates to the NAAQS since the 2003 RMP ROD (USDI/BLM. 2003*b*) include a change to the ozone standard and the addition of hourly standards for nitrogen dioxide (NO_2) and sulfur dioxide (SO_2). The most significant change relevant to this analysis is the NO_2 hourly standard of 100 parts per billion (ppb). The form of the standard is the 3-year average of the annual 98th percentile of the daily 1-hour maximum. The design value is a statistic that describes the air quality status of a given area relative to the NAAQS. The FFO area is in attainment for the NO_2 hourly standard.

3.2.1.2 Hazardous Air Pollutants

The Air Quality Technical Report discusses the relevance of hazardous air pollutants (HAPs) to oil and gas development and the particular HAPs that are regulated in relation to these activities (USDI/BLM 2011*b*). USEPA has identified 187 toxic air pollutants as HAPs. In March 2011, the USEPA published the fourth in a series of National Scale Air Toxics Assessments (NATA) that quantifies HAP emissions for 2005 by U.S. counties. The purpose of the NATA is to identify areas where HAP emissions result in high health risk. Computer models are used to develop estimates of risk of cancer or other health impacts. NATA presents risk hazard indexes for cancer, neurological, and respiratory problems for each county and census tract. Because techniques have changed over the years, each NATA is not comparable to those previously issued. USEPA also cautions that because data availability varies from state to state, the results

are not necessarily comparable from one geographic area to another. The 2005 NATA analysis estimated tract level total cancer risk for the FFO analysis area as 25 to 50 per one million, and the estimated tract level total respiratory hazard index was zero to 1. The USEPA estimates the average national cancer risk for 2005 was 50 per one million, meaning 1 person out of every 20,000 had an increased likelihood of contracting cancer from breathing air toxics from outdoor sources if exposed to 2005 emission levels over their lifetime. A respiratory hazard index below 1 indicates that exposures in the area do not exceed reference levels that would have adverse effects for human health.

3.2.1.3 Climate

The analysis area is located in a semiarid climate regime typified by dry windy conditions and limited rainfall. Summer maximum temperatures are generally in the range of 80 or 90 degrees Fahrenheit (°F), and winter minimum temperatures are generally in the teens to 20s. Temperatures occasionally reach above 100°F in June and July and have dipped below zero in December and January. Precipitation is divided between summer thunderstorms associated with the southwest monsoon and winter snowfall as Pacific weather systems drop south into New Mexico. Table 3-3 shows climate normals for the 30-year period from 1981 to 2010 for Farmington.

Table 3-3. Climate normals for the Farmington area 1981-2010.

Data [1]	Jan	Feb	Mar	Apr	May	Jun	Jul	Aug	Sep	Oct	Nov	Dec
Average Temperature (^{o}F)	30.5	35.8	43.2	50.4	60.4	69.8	75.4	73.2	65.4	53.3	40.5	31.0
Average Max Temperature (^{o}F)	40.8	46.8	56.1	64.7	74.8	85.1	89.6	86.5	79.1	66.4	52.2	41.2
Average Min Temperature (^{o}F)	20.3	24.8	30.3	36.2	46.1	54.5	61.2	59.8	51.7	40.1	28.8	20.7
Average Precipitation (inches)	0.53	0.59	0.78	0.65	0.54	0.21	0.9	1.26	1.04	0.91	0.68	0.50

Source: USDI/BLM 2011*b*

1 Data collected at New Mexico State University Agricultural Science Center – Farmington.

3.3 Cultural Resources

The project is located within the archaeologically rich San Juan Basin of northwestern New Mexico. In general, the prehistory of the San Juan Basin can be divided into five major periods: PaleoIndian (ca. 10000 B.C. to 5500 B.C.), Archaic (ca. 5500 B.C. to A.D. 400), Basketmaker II to III and Pueblo I to IV periods (A.D. 1 to 1540), and the historic (A.D. 1540 to present), which includes Native American as well as later Hispanic and Euro-American settlers. A detailed description of these various periods and select phases within each period is provided in the Farmington PRMP/FEIS (USDI/BLM 2003*a*).

The Proposed Action would be located within the Navajo Reservoir watershed. Based on the Farmington PRMP/FEIS (USDI/BLM 2003*a*), a total of 4,329 sites representing Archaic Period, Basketmaker II, Basketmaker III, Unknown Anasazi, Pueblo I, Pueblo II, Pueblo III, Pueblo IV, Unknown Navajo, Dinétah/Gobernador Phase, Cabezon Phase, Reservation Phase, Apache, Pueblo, Hispanic, and Euro-Anglo temporal/cultural components have been documented within the watershed. Of the 18 categories of

sites defined based on temporal/cultural affiliation, 16 are represented. Lacking in the watershed are sites attributed to Paleo and Ute occupations. The most frequently occurring cultural affiliations recorded are Anasazi Pueblo I (41 percent) and Dinétah/Gobernador (15 percent). Features found at these sites include small pueblos, pithouses, hogans, and artifact scatters. Sites density is high with some gaps in the information or undiscovered sites due to lack of inventory.

The entire area of potential affect for the proposed well pads and the south fluids management pit was surveyed between March 3 and May 25, 2011, by LAC at a BLM Class III level (100 percent) in accordance with the *Procedures for Performing Cultural Resources Fieldwork on Public Lands in the Area of New Mexico BLM Responsibilities* (USDI/BLM 2005). A total of 57.1 acres were surveyed for cultural resources. The Class III inventory recorded 13 archaeological sites, including six newly recorded and seven previously recorded, and eight isolated finds. Nine of the sites are eligible for nomination to the National Register of Historic Places, three are not eligible, and one requires more information to make a determination and in the interim is treated as though it is eligible. A copy of the cultural resources report (LAC 2011-16 No. 1; BLM 2012(II)028F) has been submitted under separate cover to the BLM/FFO.

The entire area of potential effect for the proposed water line, bore entry/exit points, and the north fluids management pit were surveyed between November 28, 2011, and April 13, 2012, by LAC at a BLM Class II level. A total of 44.80 acres were surveyed by LAC. Twenty-four previously recorded sites were updated during the cultural surveys, and one new site was discovered and recorded. Nineteen of the sites are considered eligible for the National Register of Historic Places and three as not eligible. Three require more information to make a determination and in the interim are treated as though they are eligible. The cultural resources report (LAC 2012-16; BLM 2012(III)052F) has been submitted under separate cover to the BLM/FFO.

Table 3-4 lists the sites, cultural affiliation, site type, and the eligibility recommendations for all sites encountered during the surveys.

Table 3-4. Summary of cultural resources encountered within the Proposed Action area of potential effect.

Site Number	Cultural Affiliation	Site Type	Eligibility
78916	Anasazi Pueblo I	Artifact scatter	Not Eligible
79026	Pueblo I/Early Navajo	Habitation/habitation	Eligible
81528	Early Navajo	Scatter with features	Eligible
104501	Anasazi Pueblo I	Scatter	Eligible
127951	Historic-Modern	Tent platform/pen?	Not Eligible
153246	Early Navajo	Habitation	Eligible
162288	Early Navajo	Habitation	Eligible [1]
171952	Anasazi Basketmaker II	Habitation	Eligible
171953	Early Navajo	Habitation	Eligible
171954	Anasazi Pueblo I	Scatter with features	Need Additional Data
171955	Early Navajo	Scatter with features	Eligible

Site Number	Cultural Affiliation	Site Type	Eligibility
171956	Historic-Modern	Camp	Not Eligible
171957	Anasazi Pueblo/Early Navajo	Habitation/habitation	Eligible
26274	Anasazi Pueblo I	Scatter with features	Eligible
79026	Anasazi Pueblo I Early Navajo	Habitation	Eligible
79028	Anasazi Pueblo I	Habitation	Eligible
80219	Anasazi Pueblo I/Pueblo II	Habitat, multiple residence	Eligible
80494	Anasazi Pueblo I/Early Navajo	Artifact scatter/scatter with features	Eligible
81525	Anasazi Pueblo I/Pueblo II	Habitation	Eligible
81527	Anasazi Pueblo/Early Navajo	Habitation/Scatter with features	Eligible
81528	Early Navajo	Scatter with features/ Habitation	Eligible
104500	Early Navajo	Scatter with features	Eligible
104501	Anasazi Pueblo I	Artifact scatter	Eligible
107776	Early Navajo	Habitation	Eligible
127949	Anasazi Pueblo I	Artifact scatter	Eligible
127950	Unknown	Scatter with feature	Not Eligible
127951	Unknown historic	Isolated feature	Not Eligible
128406	Unknown	Artifact scatter	Eligible
128407	Early Navajo	Isolated feature	Eligible
166392	Anasazi Pueblo I	Artifact scatter	Need Additional Data
171952	Anasazi Basketmaker II	Habitation	Eligible
171953	Early Navajo	Habitation	Eligible
172531	Unknown	Artifact scatter	Not Eligible
172532	Early Navajo	Artifact scatter	Need Additional Data
172533	Unknown	Scatter with feature	Eligible
172534	Early Navajo	Artifact scatter	Need Additional Data
172536	Anasazi Unknown	Scatter with feature	Eligible
172663	Early Navajo	Scatter with feature	Eligible

3.4 Soils

The principal geological formation underlying the Rosa Unit is the San Jose Formation (Manley et al. 1987). Two major soil mapping units occur within the Middle Mesa portion of the project area: Penistaja-Buckle association, gently sloping, and Travessilla-Weska-Rock outcrop complex, extremely steep (NRCS 1980). The Natural Resources Conservation Service (NRCS) has mapped two soil units in the

eastern segment of the proposed project area: Vessilla-Menefee-Orlie complex (1 to 30 percent slopes) and Orlie fine sandy loam (1 to 8 percent slopes) (NRCS 2008). Complete soil information is available in the NRCS's *Soil Survey of San Juan County, New Mexico Eastern Part* (NRCS 1980) and the *Soil Survey of Rio Arriba County, New Mexico: Parts of Rio Arriba and Sandoval Counties* (NRCS 2008).

The Penistaja-Buckle soil unit is found on mesas, plateaus, fans, and in valleys with slopes from 0 to 5 percent. This unit is about 50 percent Penistaja loam, 35 percent Buckle silt loam, and 15 percent other soil inclusions. The Penistaja soil is deep and well drained, and was formed in alluvial and eolian material derived predominantly from sandstone and shale. The surface layer is typically brown loam about 3 inches thick. This soil has moderate permeability, high available water capacity, medium runoff, and a moderate potential for water erosion. The Buckle soil is deep and well drained, and was formed in alluvium derived predominantly from sandstone and shale. The surface layer is typically brown silt loam about 8 inches thick. This soil has moderately slow permeability, very high available water capacity, medium runoff potential, and a moderate potential for water erosion (NRCS 1980).

The Rock Outcrop-Travessilla-Weska soil unit is found on hills, breaks, and mesas with slopes of 30 to 70 percent. This unit is about 40 percent Rock outcrop, 30 percent Travessilla sandy loam, 20 percent Weska silty clay loam, and 10 percent other soil inclusions. Rock outcrop is exposed areas of barren sandstone. The Travessilla soil is very shallow and well drained, and is formed in residuum derived predominantly from sandstone. The surface layer is typically pale brown sandy loam about 1 inch thick. This soil has moderately rapid permeability, very low available water capacity, rapid runoff, and severe water erosion potential. The Weska soil is very shallow and well drained, and is formed in residuum derived predominantly from shale. This soil has moderately slow permeability, very low available water capacity, rapid runoff, and very severe water erosion potential (NRSC 1980).

Approximately 45 percent of Vessilla-Menefee-Orlie complex, 1 to 30 percent slopes is composed of Vessilla and similar soils, 25 percent is composed of Menefee and similar soils, 20 percent is composed of Orlie and similar soils, and 10 percent is made up of minor soil components. Vessilla soil is considered a well-drained soil, with a depth class of shallow and slowest permeability classification of moderately rapid. Available water capacity for Vessilla soils is very low. This soil type has a shrink swell potential of low, runoff classification of medium, and high susceptibility to wind erosion. Menefee soil is considered a well-drained soil, with a depth class of shallow and slowest permeability classification of slow. Available water capacity for Menefee soils is very low. This soil type has a shrink swell potential of moderate, runoff classification of high, and susceptibility to wind erosion. Orlie soil is considered a well-drained soil, with a depth class of very deep and slowest permeability classification of moderately slow. Available water capacity for Orlie soils is high. This soil type has a shrink swell potential of moderate, runoff classification of medium, and slight susceptibility to wind erosion (NRCS 2008).

Approximately 80 percent of Orlie fine sandy loam, 1 to 8 percent slopes is composed of Orlie and similar soils, and 20 percent is made up of minor soil components. Orlie fine sandy loam soils are considered a well-drained soil, with a depth class of very deep and slowest permeability classification of moderately slow. Available water capacity for this soil is high. This soil type has a shrink swell potential of moderate, runoff classification of medium, and high susceptibility to wind erosion (NRCS 2008).

3.5 Vegetation

Extensive areas of Middle Mesa have undergone vegetation treatments. Beginning in the late 1960s, anchor chaining was conducted in piñon-juniper woodlands, and more recently prescribed fire and herbicide treatments have been employed to facilitate the growth of grasses and browse. Three major vegetation communities occur within the Middle Mesa portion of the Rosa Unit: reclaimed shrub grassland habitat associated with the existing disturbance, piñon-juniper woodland, and Great Basin desert scrub sagebrush series. A more detailed description of vegetation communities within the project area is provided in the Biological Survey Reports (BSRs) in Appendix F.

Dominant species in the reclaimed shrub grassland habitat include western wheat (*Pascopyrum smithii*), crested wheat (*Agropyron cristatum*), and smooth brome (*Bromus inermis*), with scattered four-winged saltbush (*Atriplex canescens*), rubber rabbitbrush (*Ericameria nauseosa*), and big sagebrush (*Artemisia tridentata*). Typically vegetative cover ranges widely from 2 to 70 percent in this vegetation type.

The piñon-juniper woodland is dominated by piñon pine (*Pinus edulis*) and Utah juniper (*Juniperus osteosperma*) with an understory dominated by broom snakeweed (*Gutierrezia sarothrae*), big sagebrush, Indian ricegrass (*Achnatherum hymenoides*), and James' galleta grass (*Pleuraphis jamesii*). Trees in the woodland vary widely in size and stature, and are a mix of juvenile and mature. Tree canopy varies within woodland areas and ranges from 25 to 40 percent with understory cover widely ranging from approximately 15 to 30 percent. Approximately 500 piñon and juniper trees occur within the area of potential effect.

The Great Basin desert scrub sagebrush series is dominated by big sagebrush, broom snakeweed, Indian ricegrass, and James' galleta grass. Vegetative cover varies from an estimated 25 to 40 percent.

3.6 Water Resources

The proposed project area is located in the Upper Colorado River Hydrologic Region and is part of the San Juan River sub-region. The proposed project area is more specifically located within the Navajo Reservoir sub-watershed. The Proposed Action would be located on Middle and Rosa mesas, which are separated by Navajo Lake. The four proposed well pads and two fluids management pits would be located approximately 2,500 feet to 1 mile east of Navajo Lake on Middle Mesa. The proposed water line would directionally drill under Navajo Lake from Rosa Mesa to Middle Mesa (Figure 2-1). There are no well-defined drainages within the proposed well pads or fluids management pits. Two small erosional drainages cross the fluids management pit through the middle and east corner of the area. The proposed water line would not cross any ephemeral stream or intermittent drainage, according to the U.S. Geological Survey (USGS) National Hydrography Dataset (refer to Figure 2-2). There are no wetlands, seeps, or springs within the proposed area of disturbance associated with the well pads, fluids management pits, or water line.

The primary aquifers in the BLM/FFO area are the sandstone based Uinta-Animas and the Mesaverde. Figure 3-1 shows the geologic time column that relates to aquifers in the San Juan Basin. The Uinta-Animas aquifer is composed primarily of Lower Tertiary rocks consisting of the San Jose Formation, the underlying Animas Formation and its lateral equivalent, the Nacimiento Formation, and the Ojo Alamo Sandstone. The aquifer thickness generally increases toward the central part of the basin.

Era	System		Formation		Thickness	Production
CENOZOIC	TERTIARY		San Jose Formation		2500 ft.	Gas
			Nacimiento Formation		500-1300 ft.	Gas
			Ojo Alamo Sandstone		250 ft.	Gas
MESOZOIC	CRETACEOUS		Kirtland Shale	Farmington Sandstone	1500 ft.	Gas/Oil
			Fruitland Formation		500 ft.	Gas
			Pictured Cliffs Sandstone		250 ft.	Gas
			Lewis Shale	Huerfanito Bentonite	500-1900 ft.	Gas
		Mesaverde Group	Cliff House Sandstone		0-800 ft.	Gas
			Menefee Formation		350-2200 ft.	Gas
			Point Lookout Formation		100-300 ft.	Gas
		Mancos Shale	Upper Mancos Shale/Tocito Sandstone		2300-2500 ft.	Gas/Oil
			Gallup Sandstone/Carlile Shale			Gas/Oil
			Greenhorn Limestone			
			Graneros Shale			
			Dakota Sandstone		150-200 ft.	Gas/Oil
	JURASSIC		Morrison Formation		400-900 ft.	
			Wanakah Formation	Todilto Limestone	50-200 ft.	
			Entrada Sandstone		100-300 ft.	Oil
	TRIASSIC		Chinle Formation		500-1600 ft.	
PALEOZOIC	PERMIAN		Cutler Formation		1500-2500 ft.	
	PENNSYLVANIAN	Hermosa Formation	Honaker Trail Formation			
			Paradox Formation		200-3000 ft.	Gas?
			Pinkerton Trail Formation			
			Molas Formation		0-100 ft.	
	MISSISSIPPIAN		Leadville Limestone		0-165 ft.	
	DEVONIAN		Elbert Formation		0-325 ft.	
	CAMBRIAN		Ignacio Quartzite		0-100 ft.	
PRECAMBRIAN						

Figure 3-1. Geologic time column of the San Juan Basin (USDI/BLM 2003*a*).

The Mesaverde aquifer comprises water-yielding units in the Upper Cretaceous Mesaverde Group and some adjacent Tertiary and Upper Cretaceous formations. In the basin, the aquifer consists of sandstone, coal, siltstone, and shale of the Mesaverde Group. The aquifer has a maximum thickness of about 4,500 feet in the southern part of the basin. The quality of the Mesa Verde Aquifer is extremely variable. Sparse data indicate that the total dissolved solids (TDS) concentrations range from about 1,000 to 4,000 milligrams per liter (mg/L) in the basin (USDI/BLM 2003*a*, page 3-29) and are also high in chlorides (USGS 1995). The available data in the San Juan Basin indicate recharge in the area of the Zuni Uplift, Chuska Mountains, and in northern Sandoval County, New Mexico. Transmissivity, the rate which groundwater flows horizontally through an aquifer, of the Mesaverde aquifer is less than 50 feet squared per day in large areas of the Colorado Plateau (USGS 1995).

Groundwater is readily available in most of the FFO planning area and is of fair to poor quality. Generally TDS exceed 1,000 mg/L and range from 400 up to 4,000 mg/L. The water is hard to very hard with chemical composition dependent on location of withdrawal and the producing aquifer. Calcium or sodium is usually the predominant cation with bicarbonate or sulfate the predominant anion (USDI/BLM 2003*a*, page 3-30).

A search of the New Mexico State Engineer's Office Water Administration and Technical Engineering Resource System database for the proposed project area and vicinity (1-mile radius) was performed. The database has no records of water wells located within the proposed project area or within a 1-mile radius. The database does list a pump located approximately 1 mile southwest of the eastern bore site. The pump is a point of diversion registered with the New Mexico State Engineer's Office and is owned by San Juan Water Haulers.

Most onshore produced water is injected deep underground for either enhanced recovery or disposal. With the passage of the Safe Drinking Water Act in 1974, the subsurface injection of fluids came under federal regulation. In 1980, the USEPA promulgated the Underground Injection Control regulations. The program is designed to protect underground sources of drinking water. The NMOCD regulates oil and gas operations in New Mexico. The NMOCD has the responsibility to gather oil and gas production data, permit new wells, establish pool rules and oil and gas allowables, issue discharge permits, enforce rules and regulations of the division, monitor underground injection wells, and ensure that abandoned wells are properly plugged and the land is responsibly restored. The New Mexico Environment Department (NMED) administers the major environmental protection laws. The Water Quality Control Commission (WQCC), which is administratively attached to the NMED, assigns responsibility for administering its regulations to constituent agencies, including the NMOCD. The NMOCD administers, through delegation by the WQCC, all Water Quality Act regulations pertaining to surface and groundwater (except sewage not present in a combined waste stream).

According to the NMOCD, produced water, if predictable in salt concentration, can be used for drilling and completion and possibly cementing (Jones, pers. comm. 2012). The use of produced water for drilling fluid is authorized under New Mexico State regulation (19.15.2.51 NMAC).

3.7 Wildlife

The BLM is responsible for the wildlife stewardship and habitat in the project area. The project area includes portions of the Middle Mesa Wildlife and Rosa Mesa SDAs, both of which are managed by the BLM/FFO to preserve and protect big game habitat (USDI/BLM 2003*a*). The vegetation in the project area generally consists of piñon-juniper woodlands on mesa tops and ridges with sagebrush grasslands at lower elevations. The natural vegetation has been highly disturbed since the late 1960s by mechanical and chemical treatments. Additionally, oil and gas activities have been underway for more than 50 years within the Middle Mesa Wildlife Area SDA contributing to vegetation and habitat disturbance (USDI/BLM 2011*a*).

In 2006, the BLM estimated 100 to 150 mule deer and fewer than 50 elk use all of Middle Mesa (USDI/BLM 2008*a*). The New Mexico Department of Game and Fish characterizes the project area as low wintering big game density with good browse availability (USDI/BLM 2011*a*, page 60).

Piñon-juniper and sagebrush grassland vegetation communities provide habitat not only for mule deer and elk, but a variety of other terrestrial wildlife species. Wildlife and sign of wildlife identified throughout the project area included mule deer (*Odocoileus hemionus*), elk (*Cervus elaphus*), coyote (*Canis latrans*), pocket gopher (*Thomomys* sp.), desert cottontail (*Sylvilagus audubonii*), and black-tailed jackrabbit (*Lepus californicus*). No prairie dog burrows were recorded within the area of potential effect.

3.8 Migratory Birds

While all migratory songbirds are protected by law, certain species have been determined to be at greater risk than others. There are slightly more than 350 avian species in San Juan County and the surrounding area administered by the BLM/FFO. A total of 136 species have been confirmed as breeding in San Juan County with likely additional species if one considers the adjacent counties within the FFO area. Data collected through breeding bird surveys coordinated by the USFWS as well as other private sector efforts have provided the basis for the New Mexico Partners in Flight (NMPIF) organization to develop bird "Watch Lists" and the USFWS's "Birds of Conservation Concern List." The proposed project area contains two community types addressed in these documents: Great Basin desert scrub and piñon-juniper woodland. Some of the birds listed as "Highest Priority" by the NMPIF group as well as USFWS "Birds of Conservation Concern" include the ferruginous hawk (*Buteo regalis*), gray vireo (*Vireo vicinior*), piñon jay (*Gymnorhinus cyanocephalus*), and juniper titmouse (*Baeolophus ridgwayi*).

The NMPIF Group has identified priority species of birds for the State of New Mexico by habitat type. The FFO area lies within the Colorado Plateau physiographic region as identified by the NMPIF. The Bird Conservation Plan developed for the State of New Mexico by NMPIF lists the sage thrasher (*Oreoscoptes montanus*) and sage sparrow (*Amphispiza belli*) within the Great Basin Desert Shrub habitat type as "highest priority" species for conservation (NMPIF 2007).

Avian species recorded within the project area included common raven (*Corvus corax*), western scrub jay (*Aphelocoma californica*), black-billed magpie (*Pica hudsonia*), dark-eyed junco (*Junco hyemalis*), gray vireos (*Vireo vicinior*), black-chinned hummingbird (*Archilochus alexandri*), turkey vulture (*Cathartes aura*), gray flycatcher (*Empidonax wrightii)*, northern flicker (*Colaptes auratus)*, and rufous-side towhee (*Pipilo erythrophthalmus*).

3.9 Special Status Species

In accordance with BLM Manual 6840, the BLM manages certain sensitive species not federally listed as threatened or endangered in order to prevent or reduce the need to list them as threatened or endangered in the future. Included in this category are federal candidates or proposed species that receive no special protections under the Endangered Species Act (ESA). Special status species and their potential to occur in the proposed project area are listed in Table 3-5. The BSRs in Appendix F provide the basis for the findings listed in the table.

Table 3-5. Farmington Field Office special status species, habitat associations, and potential to occur in the project area.

Species	Habitat Associations	Presence [1]
Golden eagle (*Aquila chrysaetos*)	In the west, mostly open habitats in mountainous, canyon terrain. Nests primarily on cliffs and trees.	S
Burrowing owl (*Athene cunicularia*)	Rarely dig their own burrows and are typically associated with prairie dog colonies.	NP
Mountain plover (*Charadrius montanus*)	Breeds in flat, open grasslands; often associated with prairie dog towns and intensive grazing.	NP
Yellow-billed cuckoo	Breeds in riparian woodlands with dense, understory	NP

Species	Habitat Associations	Presence [1]
(*Coccyzus americanus occidentalis*)	vegetation.	
Prairie falcon (*Falco mexicanus*)	Found in arid, open grasslands and shrub-steppe habitats. Prairie falcons require cliffs for nesting.	NP
American peregrine falcon (*Falco peregrinus anatum*)	Rugged terrain with rocky cliffs and canyons (30-1,000+ feet high), adjacent to rivers, lakes, or streams. Urban areas with towers and buildings are also inhabited.	S
Bald eagle (*Haliaeetus leucocephalus*)	Nests in forested areas adjacent to large bodies of water.	S
Aztec gilia (*Aliciella formosa*)	Salt desert scrub communities in soils of the Nacimiento Formation (5,000-6,000 feet).	NP
Brack's hardwall cactus (*Sclerocactus cloveriae ssp. brackii*)	Sandy clay of the Nacimiento Formation in sparse shadscale scrub (5,000-6,000 feet).	NP

1 K - Known, documented observation within project area; S - Habitat suitable and species suspected to occur within the project area; NS - Habitat suitable but species is not suspected to occur within the project area; NP - Habitat not present and species unlikely to occur within the project area.

The proposed project area contains potential habitat for four BLM/FFO special management species: golden eagle (*Aquila chrysaetos*), prairie falcon (*Falco mexicanus*), American peregrine falcon (*Falco peregrinus anatum*), and bald eagle (*Haliaeetus leucocephalus*).

Navajo Reservoir, located east and southeast of the proposed project area, provides perching, roosting, and foraging opportunities for bald eagle; however, this species is not known to nest in San Juan County (USDI/BLM 2003*a*). Bald eagles are common winter residents in the area. Three BLM-designated Bald Eagle Area of Critical Environmental Concern (ACEC) units are located near the proposed project, San Juan No. 5, 6, and 7 units. These three ACEC units are located within 2,250 to 4,000 feet of the proposed fluids management pit. Because of the project area's proximity to Navajo Reservoir and designated ACEC units, bald eagles are likely to occur in the area between November and March.

According to the BLM/FFO, there are three recorded historic or currently active golden eagle nests and three American peregrine falcon nests within 15 miles of the project area (USDI/BLM 2012, unpublished data). There are no documented prairie falcon nests within 15 miles of the proposed project area. However, the area does provide suitable foraging habitat for this species. The proposed area of disturbance associated with the Proposed Action was not found to contain suitable nesting substrate for any of these raptor species.

The proposed project area does not contain potential habitat for any other BLM special status species. No special status species, or signs thereof, were observed during the field investigations conducted in September and October 2011, and in January and June 2012.

3.10 Socioeconomics

The socioeconomic impacts of the alternatives are related to the jobs, wages, spending, and tax revenues generated by activities and natural gas production associated with the alternatives. The area that would experience socioeconomic effects includes San Juan and Rio Arriba counties in New Mexico and La Plata

and Archuleta counties in Colorado as these are the communities where workers are likely to reside and spend their paychecks (refer to Figure 2-1). The natural gas produced in Middle Mesa is located in San Juan County, New Mexico. Therefore, impacts to government revenues from severance taxes and royalties would affect San Juan County, the State of New Mexico, and the U.S. Federal government.

Recent population, unemployment rate, and median household income for the four counties in the affected area are included in Table 3-6. Generally, the region shows faster population growth, higher unemployment, and slightly lower median household income than the respective state as a whole.

Table 3-6. Population, unemployment rate, and median household income.

County	Population (2011)	Annual Unemployment Rate (2011)	Median Household Income (2006-2010)
Rio Arriba, NM	40,446	8.3%	$41,437
San Juan, NM	128,200	7.8%	$46,189
New Mexico	2,082,224	7.4%	$43,820
Archuleta , CO	12,013	9.2%	$56,068
La Plata, CO	51,917	6.8%	$56,422
Colorado	5,116,796	8.3%	$56,456

Sources: U.S. Census Bureau 2010, USBLS 2011

Examining the structure of the economy, the oil and gas industry is one of the most important industries in the region. A recent report on the structure of the economy in San Juan County noted that the oil, gas, and mining industries are the largest sources of personal income even though they are not the largest employers in the region (EPS 2011).

> "The largest sources of personal income (wages and benefits) in San Juan County are Mining/Extractives and Government; however, the Mining/Extractives sector has a larger economic impact. Personal income is the total compensation received by an employee, including wages and benefits such as health insurance and employer contributions to retirement plans. Mining/Extractives account for 11 just percent of employment but generate 18 percent of the County's personal income, indicating that it is a key economic base industry. Government generates 19 percent of all personal income with 22 percent of all jobs, indicating that it has a much lower economic impact than Mining/Extractives.… San Juan County has a total GRP [gross regional product] of $5.3 billion. Mining/Extractives contribute $1.4 billion to San Juan County's economy, making it the largest single industry driver in the County, comprising 27 percent of total GRP. The next largest industry in terms of GRP or value added is Professional Services, generating 13.6 percent of GRP with only 2 percent of total jobs."

The oil and gas industry also comprises a substantial share of federal, state, and local government revenues. Total natural gas production in San Juan County was 550 billion cubic feet (bcf) in 2009. Using an average price of $4.60 per thousand cubic feet (Mcf) for 2009, the estimated value of this natural gas production was $2.5 billion dollars (IPANM 2011). In San Juan County, the average tax rates for the four

natural gas production taxes total 8.84 percent of production value (Lillywhite and Starbuck 2008). In 2009, these production taxes from both oil and gas production in San Juan County amounted to over one-third of San Juan County's General Fund Revenue.

The State of New Mexico collects oil and gas production taxes and distributes the revenue as follows: about one-third goes to the State General Fund, about one-quarter goes to local schools, about one-fifth goes to the State Severance Tax Bond Fund and the Land Grant Permanent Fund, and the remainder to local governments and state institutions (Headwaters Economics 2011). In Fiscal Year 2009, more than 18 percent of the State General Fund (almost $1 billion) was funded by taxes on oil and gas production (Starbuck 2009).

In addition to State taxes, Federal Royalty of 12.5 percent is levied on the natural gas produced on BLM lands (Headwaters Economics 2011). About half of this royalty payment is returned to New Mexico and the other half is retained by the U.S. Treasury. In 2009, the Federal Royalty revenue from natural gas production in San Juan County was estimated to be more than $300 million.

3.11 Transportation and Traffic

In the PRMP/FEIS, the transportation infrastructure serving the planning area is described as a regional network of federal and state highways with U.S. Highway 550 serving as the major highway link between Aztec, Farmington, and Bloomfield, and the oil and gas fields (USDI/BLM 2003*a*, page 3-57). For the Proposed Action, the point of origin for the majority of traffic is assumed to be Aztec, New Mexico. The proposed travel route from Aztec to Middle Mesa would use these roads: U.S. Highway 550, La Plata County Road 310, Colorado Highway 172, Colorado Highway 151, La Plata County Road 328, La Plata County Road 330, San Juan County Road 4010, and San Juan County Road 4018. All of these roads are paved except for San Juan County Roads 4010 and 4018 and La Plata County Roads 328 and 330, which have a gravel surface. Colorado Highway 172 is a regional north/south state highway that extends from the New Mexico state line to U.S. Highway 160 east of Durango, Colorado. Colorado Highway 151 is a regional east/west state highway that extends from Colorado Highway 172 in Ignacio, Colorado, to U.S. 160 west of Pagosa Springs, Colorado.

U.S. Highway 550 and Colorado Highways 172 and 151 are forecast to have substantial increases in traffic levels during the next 20 years as shown in Table 3-7.

Table 3-7. Traffic conditions along travel route from Aztec, New Mexico, to Middle Mesa.

Road Segment	AADT 2010	Estimated AADT 2030
U.S. Highway 550 North of Aztec (2009 data)	8,400	12,600
U.S. Highway 550 at Stateline	4,900	7,000
Colorado Highway 172 south of Colorado Hwy 151	6,000	9,500
Colorado Hwy 151 east of Colorado Hwy 172	3,400	4,800

Source: USDI/BLM 2011a

Key: AADT = Average Annual Daily Trips.

La Plata County, the Southern Ute Indian Tribe, Town of Ignacio, and Colorado Department of Transportation (CDOT) collaboratively developed the Ignacio Area Corridor Access Plan (ICAP) (URS 2011). The plan was formally adopted by the four agencies in January 2012. Traffic associated with the action alternatives would utilize the intersection of Colorado Highways 172 and 151 in Ignacio. The ICAP identified this intersection as heavily impacted by afternoon traffic, which would include traffic from Middle Mesa. The ICAP recommended the installation of a traffic signal at this intersection to alleviate the morning and evening peak hour congestion that occurs. This infrastructure will be implemented when funding becomes available (URS 2011). The intersection is currently operating at a level of service (LOS) F for the afternoon left turn lane into southbound traffic on Colorado Highway 172. LOS F describes backups from locations downstream that restrict or prevent movement of vehicles, creating a "gridlock" condition (CDOT 2012). LOS does not describe an instant state, but rather an average or typical service. Facilities operating at LOS F generally have more demand than capacity.

La Plata County Road 328 is a graveled road that extends approximately 3 miles from Colorado Highway 151 south to the Colorado/New Mexico state line. La Plata County Road 330 is a graveled road that bisects Colorado Highway 151 from north to south approximately 0.5 mile west of Allison, Colorado. La Plata County Road 330 extends south to the Colorado/New Mexico state line. La Plata County collects traffic data for County Roads. Table 3-8 lists the traffic counts from La Plata County Roads 330 and 328 from 2009 through 2012.

Table 3-8. La Plata County Road average daily traffic counts from 2009 through 2012.

Road Segment	Location	2009	2010	2011	2012
County Road 328	At Highway 151	524	568	533	467
County Road 328	North of state line	133	221	183	N/A
County Road 330	South of County Road 329	1051	792	624	550
County Road 330	North of state line	932	749	309	520

Sources: Cantebury, pers. comm. 2012; Davis 2012.

Key: N/A = Not available.

As shown in Table 3-8, average daily traffic counts peaked in 2009 and have declined over the last 3 years. La Plata County considers the capacity for an approximate 22-foot wide graveled road at 250 vehicles per day (VPD), therefore La Plata County Roads 328 and 330 are regarded as "high capacity" and require extra maintenance. These roads are treated with magnesium chloride three times per year to suppress fugitive dust and reduce erosion. Both roads were re-graveled in 2012 (Davis 2012).

3.12 Visual Resources

The proposed project area contains broad, level mesas intersected by deep canyons and numerous smaller arroyos. Two proposed well pads can be seen from portions of Navajo Reservoir. The remaining well pads, fluids management pits, and water line would not be visible from Navajo Reservoir. BLM Visual Contrast Rating Sheets were prepared for the proposed well pads and the eastern water line segment. The rating sheets are provided in Appendix G. Viewsheds within the project area are dominated in the foreground (0 to 0.5 mile) and middleground (0.5 to 3 miles) by mature piñon-juniper woodland and desert scrub shrublands interspersed with dirt roads and oil and gas wells. From higher elevations, the

background views to the north include the San Juan Mountains, the central portion of the San Juan Basin to the south, and the La Plata Mountains to the west. Overall, existing conditions are moderately natural.

Current visual disturbances in foreground and middleground views along public travel corridors include gravel roadways, natural gas well pads, reclaimed utility and pipeline corridors, and areas where anchor chaining has removed woodlands. Overhead power lines are typically single pole but are also present in foreground and middleground views. Viewers within the area consist of industry-related users, recreational users, and private landowners.

The BLM has stewardship responsibility to identify and protect visual values on public lands. Visual Resource Management (VRM) objectives are developed by determining the extent and quality of visual resources by utilizing the Visual Resource Inventory (VRI) process. After the VRI is completed, visual resources are weighed along with all other resource allocations identified during the RMP development process. In 2009, an updated VRI was completed for the FFO planning area. The VRI identified the proposed project area as displaying Class IV VRM values based on landscape changes over the last 30 years.

The VRM classification system is designed to maintain or enhance visual qualities and describe the different degrees of modification to the landscape (USDI/BLM 2003*a*). Modifications to the visual resource must follow the guidelines for the types of change suitable for each class. The Proposed Action would be located in a Class II VRM area (USDI/BLM 2003*a*). Management objectives for the Class II VRM are to retain the existing character of the landscape and the level of change should be low.

4. ENVIRONMENTAL CONSEQUENCES

4.1.1 Direct and Indirect Effects

Environmental resources can be affected in many ways during implementation of the action alternatives. The effect, or impact, is defined as any change or alteration in the pre-existing condition of the environment produced by the proposed action alternatives, either directly or indirectly. This chapter analyzes the environmental consequences of the No Action and proposed action alternatives.

Impacts can be either long-term (permanent, residual) or short-term (incidental, temporary). Short-term impacts affect the environment for only a limited time, and the environment usually reverts rapidly to the pre-construction condition. Short-term impacts are often disruptive and obvious. Long-term impacts are substantial and permanent alterations to the pre-project environment. The BLM defines long-term impacts as those impacts whose results endure more than 5 years. Impacts may be irreversible or residual and affected resources irretrievable.

Under the No Action Alternative, the proposed natural gas well pads would not be constructed nor the wells drilled. The water line and fluids management pits would not be constructed. There would be no new impacts from oil and gas production to resources in the project area. The No Action Alternative would result in the continuation of the current land and resource uses in the project area. This alternative serves as a baseline and will not be evaluated further in this assessment.

4.1.2 Cumulative Effects

The cumulative impacts analysis is important in understanding how multiple actions in a particular time period and space (e.g., geographic boundaries) impact the environment. The CEQ regulation defines cumulative effects as "…the impact on the environment which results from the incremental impacts of the action when added to other past, present, and reasonably foreseeable future actions regardless of what agency (federal or non-federal) or person undertakes such actions" (40 CFR §1508.7). Whereas the individual impact of one project in a particular area or region may not be considered significant, the result of numerous projects in the same area or region may cumulatively result in significant impacts. Cumulative impact analysis, as applied to the NEPA, is subject to interpretation in analyzing the magnitude of impacts to a particular area or region as a result of the Proposed Action and other actions, including reasonably foreseeable actions.

This analysis tiers to the Farmington PRMP/FEIS (USDI/BLM 2003*a*, page 4-121 to 4-129) and to the Middle Mesa POD EA (USDI/BLM 2011*a*). For a detailed analysis of cumulative impacts from the Proposed Action, refer to Chapter 4 in the Farmington PRMP/FEIS (USDI/BLM 2003*a*). The ROD approving the final plan acknowledged these, and future projected impacts, when balanced against the nation's need for domestic energy sources (USDI/BLM 2003*a*, 2003*b*, page 12).

4.1.3 Reasonably Foreseeable Development

This analysis of cumulative impacts considers past, present, and reasonably foreseeable federal and non-federal activities that are expected to occur in the region. The proposed project area has been

industrialized with oil and gas well development. The surface disturbance for each project that has been permitted has resulted in dispersed development and habitat fragmentation. The cumulative impacts fluctuate with the gradual reclamation of plugged and abandoned wells and the creation of new additional surface disturbances in the construction of new access roads and well pads. The Proposed Action would be one of a number of projects that have taken place or may reasonably be expected to take place in the region.

The action alternatives would be located within the Middle Mesa portion of the Rosa Unit, which comprises approximately 5,700 acres, of which approximately 4,800 acres are public lands. The Middle Mesa Wildlife Area SDA encompasses a total of 46,052 acres, of which 31,390 acres are public land and 40,317 acres are federal mineral acres. Drilling and development in the area has been ongoing since the leases were issued in 1948. There are more than 825 wells and 193.6 miles of road within the Middle Mesa Wildlife Area SDA based on BLM/FFO data as of May 1, 2011. The Middle Mesa portion of the Rosa Unit covers approximately 12 percent of the total SDA. Approximately 18.5 miles of roads and 53 well pads containing 98 natural gas wells are located within the Middle Mesa portion of the Rosa Unit. This current surface disturbance is the result of all companies operating in the area, including WPX Energy.

Cumulatively, under the Proposed Action, WPX Energy projects a total of 65 wells (53 horizontal Basin Mancos and 12 directional Mesaverde) could be drilled in the Middle Mesa portion of the Rosa Unit. A total of eight existing well pads would be expanded to drill the wells.

Under Alternative C, a total of 138 Basin Mancos 40-acre spacing units are included within the Middle Mesa portion of the Rosa Unit. Twenty of these spacing units would not be accessible using current directional technology, while nine have already been drilled. Therefore, a total of 109 directional wells could be drilled in the future. Based on the assumptions outlined in Section 2.2, approximately 27 well pads would be needed to access the same gas pool area as the four well pads under the Proposed Action. WPX Energy would drill approximately nine wells per year outside the seasonal closure for the SDA. The drilling program would not implement a residential camp, natural gas-powered engines, purpose-built rig, or other design features of the Proposed Action, as the cost associated with these features outweighs the economic return. Additionally, 12 directional Mesaverde wells could also be drilled under this scenario (total 121 wells).

Table 4-1 provides a summary comparison between the anticipated cumulative scenario of the action alternatives that includes the estimated number of wells and pads, surface disturbance, duration of drilling, and natural gas production. Time frames associated with drilling duration are based on 18 days per directional well and 25 days per horizontal well.

Table 4-1. Summary comparison of anticipated cumulative development per action alternative.

	Cumulative Number of Wells Anticipated	Number of Pads	Short-Term Disturbance (acres)	Long-Term Disturbance (acres)	Duration of Drilling (years)	Total Natural Gas Production (bcf)
Alternative B-Proposed Action	65	8	62	8.5 [1]	4.2	275
Alternative C	121	27	116	33	8.7	69

1 Includes the water line entry and exit points and proposed road re-route.

Key: bcf = billion cubic feet.

Oil and Gas Related Projects

The PRMP/FEIS for the lands managed by the BLM/FFO indicates development of 9,942 new oil and gas wells from 2003 to 2023 in the San Juan Basin, allowing for about 16,100 acres of long-term disturbance. The FFO manages federal hydrocarbon resources in San Juan, Sandoval, Rio Arriba, and McKinley counties. There are approximately 23,522 wells in these counties. About 16,435 of the wells in these counties are federal wells. Since 2008 the scale and pace of development under the PRMP/FEIS has declined, primarily due to lower natural gas prices. Table 4-2 lists the number of wells spud on federal lands within the FFO planning area since 2008, which shows this declining trend.

Table 4-2. Number of wells spud in the Farmington Field Office planning area since 2008.

Year	Number of Wells Spud
2008	430
2009	206
2010	148
2011	156
2012 [1]	34
Total	**1,074**

[1] As of June 25, 2012

The reasonably foreseeable development scenario (RFDS) projected for the PRMP/FEIS predicted 180 stand-alone oil wells in the Mancos and 4,108 Dakota/Mancos gas wells throughout the San Juan Basin on federal mineral estate. Since the signing of the ROD in September 2003, there have been 92 Mancos wells drilled on federal lands as of January 2012. Five are designated as producing oil wells, 80 are designated as producing gas wells, and seven wells have other statuses (e.g., temporarily abandoned). Recent drilling in the San Juan Basin has focused on the oil leg of the Mancos Shale play due to the weak gas market. Based on indications from operators, it is estimated that 25 to 30 Mancos Shale oil wells could be drilled over the next 18 months (Mankiewicz, pers. comm. 2012).

Proposed future development includes the Western Oil and Gas proposal for approximately 600 natural gas wells in eastern Burnham Chapter extending north into Upper Fruitland and Nenahnezad/San Juan

Chapters. WPX Energy is considering a pilot project on the east side of Navajo Reservoir to drill horizontal wells to the Basin Mancos gas pool; specific details have not yet been developed. The Southern Ute Indian Tribe is proposing the development of up to 48 natural gas wells to access the Mancos Shale Formation in Archuleta County, Colorado. The Gothic Shale Gas Play is a 646,403-acre shale gas formation that was discovered within Dolores and Montezuma counties, and to a lesser extent in San Miguel and La Plata counties in Colorado. There is potential for up to 1,769 new Gothic shale wells to be drilled within the gas play. However, to date few if any wells have been drilled to the Gothic Formation, and development is unlikely to occur at the scale and pace originally proposed. All of these activities would require well pads, construction areas, access roads, pipelines, or distribution power lines as needed.

Power Plants and Transmission Lines

The Four Corners Generating Station was built between 1963 and 1970. Operations are anticipated to change based on regional haze compliance plans that will result in closure of Units 1, 2, and 3, and installation of air pollution control on Units 4 and 5 by 2014. The extent and timing are uncertain and will require approvals. The post-2016 lease for Four Corners Generating Station with the Navajo Nation has been extended until 2041, pending approval.

San Juan generating station, built between 1976 and 1982, will experience a change in existing operations based on the Best Available Retrofit Technology requirements for regional haze, which may require expensive retrofit on all four units. This could result in closure of some units to avoid costly retrofit. A final compliance plan has not been approved at this time.

A variety of projects, including Navajo Transmission Project and San Juan Basin Interconnect Project, are proposed to expand the capacity of electric transmission across New Mexico to move renewable power, shift gas-fired compressors to electricity, and meet increased electric demand in the San Juan Basin. The construction dates for these projects have yet to be finalized.

Coal Mining Projects

Navajo Mine supplies coal to Four Corners Generating Station. Mining activities in Areas I and II have concluded. Reclamation is ongoing in Area II. Area III is actively mined in two pits with contemporaneous reclamation. San Juan Coal Company operates San Juan Mine, an underground mine that is the exclusive supplier of coal to the San Juan Generating Station. Surface mining at San Juan reached a depth in the early 2000s that represented an economic limit, but underground mining is feasible and the coal supply contract extends through 2017. Approximately 5,400 acres have been disturbed as of 2010. San Juan Coal Company La Plata Mine supplied coal to the San Juan Generating Station from 1986 to 2002. The mine ceased operation in 2002, and reclamation continued through 2005 and is now completed.

Other Development

Urban development in the area is expected to continue to expand with the population of San Juan County, New Mexico, projected to increase by nearly 25 percent between 2010 and 2030.

The Animas-La Plata Project development will include Ridges Basin Dam and Reservoir, Durango Pumping Plant, Ridges Basin Inlet conduit, and construction of a pipeline to deliver water for domestic

use on the Navajo Nation at Shiprock, New Mexico. The project will result in an average annual depletion of 57,100 ac-ft from the Animas River.

On the Navajo Nation south of the proposed project area, Navajo Agricultural Products Industry cultivates 110,000 acres of irrigated agricultural land. Agricultural crops are supplied with water from the Navajo Indian Irrigation Project administered by the U.S. Bureau of Reclamation. The Navajo-Gallup Water Supply project is currently in the design phase. The project would divert water from the San Juan River downstream of Fruitland, New Mexico, treat the water, and then deliver it along Highway N36 and south to Navajo chapters along U.S. Highway 491. Water delivery would continue to Window Rock, Arizona, and to the city of Gallup, New Mexico.

Other reasonably foreseeable actions expected to occur within the project area are livestock grazing, dispersed recreation including off road vehicle travel, fire management activities such as prescribed burns, and non-native invasive species control.

4.2 Comparison Between Horizontal and Directional Drilling Shale Gas Development

A complex set of federal and state laws addresses all aspects of oil and natural gas exploration in the United States. All of the laws, regulations, and permits that apply to conventional oil and gas exploration and production activities also apply to shale gas development.

Although types of equipment employed for horizontal drilling as opposed to directional/vertical drilling may vary, the processes are the same. The main variation between the two types of drilling are the trajectory and length of the well bore. As discussed in Section 2.3, a directional well bore traverses the target formation vertically, while horizontal drilling crosses the target formation on a horizontal plane (Figure 2-1). Therefore, horizontal drilling results in a longer well bore, which relates to variances in time, space, and resource use. The reason for using horizontal drilling is to take advantage of the naturally occurring geologic features of the shale formation.

Rig types also vary. For instance, the purpose-built rig that would be used under the Proposed Action has many advanced features that differ from rigs in the current San Juan Basin rig fleet. However, even within the current basin rig fleet there are differences between rig size, purpose, and associated equipment (e.g., swabbing, plug and abandon, workover, etc.).

Hydraulic fracturing is consistently used in the basin and has been for decades. Ten years ago, directional drilling was considered “new” technology—but now is commonplace in the basin. Horizontal drilling is a variation of directional drilling.

A comparison between horizontal and directional drilling under the Proposed Action is provided in Table 4-3. The table also lists the design features developed for the Proposed Action. As shown in Table 4-3, horizontal drilling can result in longer drilling times and greater water use—but it can also result in less surface disturbance and greater resource extraction.

Table 4-3. Comparison of horizontal and directional drilling per well and associated design features.

Directional Drilling	Horizontal Drilling	Proposed Action Design Feature
Drilling time 18 days	Drilling time 25 days	None
22 wells	7 wells	Horizontal drilling Purpose-built rig
7 bcf natural gas production	30 bcf natural gas production	Horizontal drilling
1.44 acres disturbance [1]	0.68 acres disturbance [1]	Use existing well pads and drill multiple wells from a single pad. Purpose-built rig allows for closer wellhead spacing on the pad (i.e., 12.5 feet vs. 50 feet).
650 metric tons of GHG emissions	318 metric tons of GHG emissions	Use of natural gas-powered engines would reduce criteria air pollutant emissions.
Greater PM_{10}, $PM_{2.5}$, NOx, and VOC emissions	Greater SO_2 and CO emissions	Use of natural gas-powered engines would reduce criteria air pollutant emissions.
1.29 ac-ft of fresh-water	15.5 ac-ft of produced water	Use of produced water for horizontal development would eliminate any fresh-water use.
Cumulatively 27 well pads (121 wells)	Cumulatively 8 well pads (65 wells)	Horizontal drilling Purpose-built rig Twinning of pad

[1] Both Alternative B and C would twin existing well pads and multiple wells would be drilled from single well pads. Estimated disturbance based on total pad size divided by the total number of wells; based on 4 directional wells under Alternative C and 8 wells per pad under Alternative B. Actual number of wells can vary per well pad.

Key: ac-ft = acre-feet; bcf = billion cubic feet; CO = carbon monoxide; GHG = greenhouse gas; NOx = nitrogen oxide; PM^{10} = particulate matter with an aerodynamic diameter equal to or less than 10 microns; $PM_{2.5}$ = Particulate matter with an aerodynamic diameter equal to or less than 2.5 microns; SO_2 = sulfur dioxide; VOC = volatile organic compounds.

The analysis in the following sections compares the impacts of Alternative B (Proposed Action) to Alternative C. Variations, if any, between horizontal and directional drilling are discussed under the affected resource.

4.3 Air Resources

Methodology and assumptions for calculating air pollutant and greenhouse gas emissions are described in the Air Resources Technical Report (USDI/BLM 2011*b*). This document incorporates the sections discussing the modification of calculators developed by the BLM to address emissions for one well. The calculators give an approximation of criteria pollutant, HAP, and greenhouse gas (GHG) emissions to be compared to regional and national emissions levels (USDI/BLM 2011*b*). Also incorporated into this document are the sections describing the assumptions that the FFO used in developing the inputs for the calculator (USDI/BLM 2011*b*). For the Proposed Action and Alternative C, the calculator has been further modified to incorporate project-specific information such as the chemistry of Mancos Shale gas, the use of natural gas-fired engines, drilling time-frames, and design features that minimize traffic volumes/distances and surface disturbance. The assumptions used in populating the emissions calculator

are provided as Appendix H. The complete calculators for the action alternatives are available upon request to the BLM/FFO.

On June 23, 2011, an MOU between the U.S. Department of Agriculture (USDA), USDI, and USEPA was signed. The purpose of this MOU is to set forth expectations and agreements for addressing air quality analyses and mitigation measures through the NEPA process related to federal oil and gas planning, leasing, or field development decisions (USDA 2011). When preparing an EA for a federal oil and gas decision where air quality or air quality related values are issues warranting NEPA analysis, the Lead Agency will consider the procedures established in the MOU.

The FFO reviewed the MOU, specifically Section V Parts A and B, and determined that:

- The Proposed Action does not require an EIS.
- The Proposed Action does not require a Field Development Decision.
- The impacts of authorizing oil and gas development such as contained in the Proposed Action have already been analyzed in the 2003 PRMP/FEIS (USDI/BLM 2003*a*).
- FFO reviewed existing analysis from USEPA, New Mexico Environment Department/Air Quality Bureau, and the BLM Air Resources Technical Report for Oil and Gas Development (USDI/BLM 2011*b*), and FFO concluded that regional air quality would not be significantly impacted by the Proposed Action.

Following those determinations, the FFO concluded that the Proposed Action does not warrant following the MOU procedures.

4.3.1 Direct and Indirect Effects from Alternative B (Proposed Action) on Air Quality

4.3.1.1 Criteria Pollutants

Table 4-4 shows estimated emissions from one proposed horizontal well for criteria pollutants and volatile organic compounds (VOC). Full development of the Proposed Action would be the 7 horizontal wells. For comparison, Table 4-5 shows total human-caused emissions for each of the counties in the FFO and La Plata County, Colorado, based on USEPA's 2008 emissions inventory (USEPA 2011).

Table 4-4. Criteria pollutant and VOC emissions estimated for the Proposed Action per well and the total for 7 wells.

Activity	PM_{10}	$PM_{2.5}$	NO_x	SO_2	CO	VOC
One Time Operations (tons)						
Well Pad Construction - Fugitive Dust	0.1	0.00	---	---	---	---
Heavy Equipment Combustive Emissions	0.23	0.10	1.76	050	5.05	0.24
Commuting Vehicles - Construction	2.65	0.17	0.07	0.00	0.07	0.02
Wind Erosion	0.33	0.05	---	---	---	---
Completion Venting	---	---	---	---	---	0.00
Sub-total: Construction	**3.23**	**0.32**	**1.83**	**0.50**	**5.11**	**0.26**
Operations (tons/year)						
Well Workover Operations - Fugitive Dust	0.09	0.01	---	---	---	---
Well Workover Operations - On-site Exhaust	0.01	0.01	0.13	0.00	0.04	0.01
Well Workover Operations - On-road Exhaust	0.00	0.00	0.00	0.00	0.00	0.00
Well Visits for Inspection & Repair - Operations	0.15	0.01	0.01	0.00	0.20	0.01
Wellhead and Compressor Station Fugitives	---	---	---	---	---	0.00
Compression	0.00	0.00	0.00	0.00	0.00	0.00
Station Visits - Operations	0.00	0.00	0.00	0.00	0.00	0.00
Dehydrators	0.00	0.00	0.00	0.00	0.00	0.00
Sub-total: Operations	**0.24**	**0.03**	**0.14**	**0.00**	**0.25**	**0.02**
Maintenance (tons/year)						
Road Maintenance [1]	0.00	0.00	0.01	0.000	0.01	0.00
Sub-total: Maintenance	**0.00**	**0.00**	**0.01**	**0.000**	**0.01**	**0.00**
Total Emissions Per Well	**3.47**	**0.35**	**1.99**	**0.51**	**5.37**	**0.28**
Total Emissions of Full Development of Proposed Action (7 Horizontal Wells)	**24.29**	**2.45**	**13.93**	**3.57**	**37.59**	**1.96**

[1] Road Maintenance occurs on existing roads that access numerous wells per day. No new roads will be constructed to develop Alternative B. The emissions generated from the calculator from road maintenance are divided by the total number of wells serviced on the section of road maintained during a day and result in numbers too small to report for PM, SO_2, CO, and VOC.

Key: CO = carbon monoxide; NO_x = nitrogen oxide; PM_{10} = particulate matter with an aerodynamic diameter equal to or less than 10 microns; $PM_{2.5}$ = Particulate matter with an aerodynamic diameter equal to or less than 2.5 microns; SO_2 = sulfur dioxide; and VOC = volatile organic compounds.

Table 4-5. Area emissions for 2008 in tons/year.

County	NO_x	CO	VOC	PM_{10}	$PM_{2.5}$	SO_2
McKinley, NM	12,595.0	31,885.2	37,509.0	66,590.7	6,977.5	1,659.8
Rio Arriba, NM	4,276.6	27,352.9	45,841.5	46,321.6	4,746.2	89.1
San Juan, NM	35,651.7	54,549.5	46,994.9	69,655.7	8,108.3	11,471.0
Sandoval, NM	4,780.1	33,290.5	31,733.6	36,232.3	4,056.3	123.4
La Plata, CO	2,360.8	21,026.8	18,462.5	2,957.7	491.1	97.3
Total	59,554.2	168,104.9	180,541.5	159,068	24,379.4	13,440.6

Source: USEPA 2008 National Emissions Inventory. http://www.epa.gov/ttn/chief/net/2008inventory.html

Key: CO = carbon monoxide; NO_x = nitrogen oxides; PM_{10} = particulate matter with an aerodynamic diameter equal to or less than 10 microns; $PM_{2.5}$ = Particulate matter with an aerodynamic diameter equal to or less than 2.5 microns; SO_2 = sulfur dioxide; and VOC = volatile organic compounds.

Table 4-6 provides the estimated increase in emissions that could result from the Proposed Action.

Table 4-6. Percent increase in emissions in analysis area from the Proposed Action.

	NO_x	CO	VOC	PM_{10}	$PM_{2.5}$	SO_2
Total Emissions for the FFO Analysis area	59,554.2	168,104.9	180,541.5	159,068	24,379.4	13,440.6
Total Emissions of Full Development of Alternative B (7 Horizontal Wells)	13.93	37.59	1.96	24.29	2.45	3.57
Percent Increase	0.0002	0.0002	0.00001	0.0002	0.0001	0.0003

Key: CO = carbon monoxide; FFO = Farmington Field Office; NO_x = nitrogen oxides; PM_{10} = particulate matter with an aerodynamic diameter equal to or less than 10 microns; $PM_{2.5}$ = Particulate matter with an aerodynamic diameter equal to or less than 2.5 microns; SO_2 = sulfur dioxide; and VOC = volatile organic compounds.

4.3.1.2 Hazardous Air Pollutants

The formulas used for calculating HAPs in the calculators are very imprecise. For many processes it is assumed that emission of HAPs will be equivalent to 10 percent of VOC emissions. Therefore, the HAP emissions reported here should be considered a very gross estimate. The calculator estimates that a total of 0.051 tons/year of HAPs would be emitted during construction, drilling, and first year of operation of a proposed horizontal gas well in the San Juan Basin

4.3.1.3 Greenhouse Gases

Information about GHGs and their effects on national and global climate is presented in the Air Resources Technical Report (USDI/BLM 2011*b*). Analysis of the impacts of the Proposed Action on GHG emissions will be reported below. Only the GHG emissions associated with exploration and production of

oil and gas will be evaluated here because the environmental impacts of GHG emissions from oil and gas consumption, such as refining and emissions from consumer-vehicles, are not effects of the Proposed Action as defined by the CEQ because they do not occur at the same time and place as the action. Thus, GHG emissions from consumption of oil and gas do not constitute a direct effect that is analyzed under the NEPA. Consumption is not an indirect effect of oil and gas production because production is not a proximate cause of GHG emissions resulting from consumption. However, emissions from consumption and other activities are accounted for in the cumulative effects analysis.

The two primary GHGs associated with the oil and gas industry are carbon dioxide (CO_2) and methane (CH_4). Because CH_4 has a global warming potential that is 21 to 25 times greater than the warming potential of CO_2, the USEPA measures CO_2 equivalent (CO_{2eq}), which takes the difference in warming potential into account for reporting GHG gas emissions. Emissions are expressed in metric tons of CO_{2eq} in this document. Table 4-7 summarizes the estimated emissions of CO_2 and CH_4 from the Proposed Action.

Table 4-7. Estimated greenhouse gas emissions from the Proposed Action.

Activity	CO_2	CH_4	CO_{2eq}	CO_{2eq} metric tons
Construction				
Heavy Equipment Combustive Emissions	272.36	0.01	272.82	247.57
Commuting Vehicles - Construction	19.24	0.00	19.32	17.53
Completion Venting	0.00	0.00	0.00	0.00
Sub-total: Construction	291.60	0.01	292.14	265.10
Operations				
Well Workover Operations - On-site Exhaust	10.51	0.00	10.55	9.57
Well Workover Operations - On-road Exhaust	0.45	0.00	0.45	0.41
Well Visits for Inspection & Repair - Operations	3.94	0.00	3.99	3.62
Wellhead and Compressor Station Fugitives	0.19	1.96	41.27	37.45
Dehydrators	0.65	0.00	0.66	0.59
Sub-total: Operations	15.73	1.96	56.91	51.64
Maintenance				
Road Maintenance	1.73	0.00	1.74	1.58
Sub-total: Maintenance	1.73	0.000	1.74	1.58
Total Emissions Per Well	**309.07**	**1.96**	**349.06**	**318.32**
Total Emissions from Full Development of Alternative B (7 Horizontal Wells)	2,163.5	13.7	2,443.4	2,228.2

Key: CO_2 = carbon monoxide; CH_4 = methane; and CO_{2eq} = CO_2 equivalent.

Total Greenhouse Gases

The available statewide GHG summary (NMED 2010) combines GHG emissions from CO_2 and CH_4. To compare the GHG emissions from the Proposed Action estimated by the calculator with statewide GHG emissions, CO_{2eq} emissions of both CH_4 and CO_2 were summed. The total statewide GHG emission estimate for 2007 was 76,200,000 metric tons CO_{2eq} (76.2 million metric tons; NMED 2010). The estimated CO_{2eq} metric tons emissions from 7 horizontal wells (2,228.24) would represent a 0.00003 percent increase in New Mexico CO_2 emissions.

4.3.2 Direct and Indirect Effects of Alternative C on Air Quality

Table 4-8 summarizes the emission in tons for Alternative C. Table 4-9 shows the estimated GHG emissions for Alternative C.

Table 4-8. Summary of emissions in tons for Alternative C.

Activity	PM_{10}	$PM_{2.5}$	NO_x	SO_2	CO	VOC
Construction						
Well Pad Construction - Fugitive Dust	0.15	0.02	---	---	---	---
Heavy Equipment Combustive Emissions	0.28	0.27	4.92	0.12	1.34	0.36
Commuting Vehicles - Construction	2.88	0.30	0.15	0.00	0.19	0.07
Wind Erosion	0.64	0.10	---	---	---	---
Completion Venting	---	---	---	---	---	0.00
Sub-total: Construction	**3.95**	**0.68**	**5.07**	**0.12**	**1.53**	**0.43**
Operations (tons/year)						
Well Workover Operations - Fugitive Dust	0.09	0.01	---	---	---	---
Well Workover Operations - On-site Exhaust	0.01	0.01	0.13	0.00	0.04	0.01
Well Workover Operations - On-road Exhaust	0.00	0.00	0.00	0.00	0.00	0.00
Well Visits for Inspection & Repair - Operations	0.15	0.01	0.01	0.00	0.20	0.01
Wellhead and Compressor Station Fugitives	---	---	---	---	---	0.00
Compression	0.00	0.00	0.00	0.00	0.00	0.00
Station Visits - Operations	0.00	0.00	0.00	0.00	0.00	0.00
Dehydrators	0.00	0.00	0.00	0.00	0.00	0.00
Sub-total: Operations	**0.24**	**0.03**	**0.14**	**0.00**	**0.25**	**0.02**
Maintenance (tons/year)						
Road Maintenance [1]	0.00	0.00	0.01	0.000	0.00	0.00
Sub-total: Maintenance	**0.00**	**0.00**	**0.01**	**0.000**	**0.00**	**0.00**
Total Emissions Per Well	**4.19**	**0.71**	**5.23**	**0.12**	**1.78**	**0.45**
Total Emissions for Full Development of Alternative C (22 Directional Wells)	**92.2**	**15.6**	**115.1**	**2.6**	**39.2**	**9.9**

1 Road maintenance occurs on existing roads that access numerous wells per day. No new roads would be constructed to develop Alternative B. The emissions generated from the calculator from road maintenance are divided by the total number of wells serviced on the section of road maintained during a day and result in numbers too small to report for PM, SO_2, CO, and VOC.

Key: CO = carbon monoxide; NO_x = nitrogen oxide; PM_{10} = particulate matter with an aerodynamic diameter equal to or less than 10 microns; $PM_{2.5}$ = Particulate matter with an aerodynamic diameter equal to or less than 2.5 microns; SO_2 = sulfur dioxide; and VOC = volatile organic compounds.

Table 4-9. Estimated greenhouse gas emissions from Alternative C (tons/year).

Activity	CO_2	CH_4	CO_{2eq}	CO_{2eq} metric tons
Construction				
Heavy Equipment Combustive Emissions	616.23	0.01	618.42	561.18
Commuting Vehicles - Construction	38.86	0.00	39.06	35.44
Completion Venting	0.00	0.00	0.00	0.00
Sub-total: Construction	655.09	0.01	657.48	596.62
Operations				
Well Workover Operations - On-site Exhaust	10.51	0.00	10.55	9.57
Well Workover Operations - On-road Exhaust	0.45	0.00	0.45	0.41
Well Visits for Inspection & Repair - Operations	3.94	0.00	3.99	3.62
Wellhead and Compressor Station Fugitives	0.19	1.97	41.66	37.81
Dehydrators	0.54	0.00	0.55	0.50
Sub-total: Operations	15.63	1.98	57.19	51.90
Maintenance				
Road Maintenance	1.56	0.00	1.56	1.42
Sub-total: Maintenance	1.56	0.000		1.42
Total Emissions Per Well	**672.28**	**1.98**	**714.67**	**649.94**
Total Emissions for Full Development of Alternative C (22 Directional Wells)	**14,790**	**43.6**	**15,723**	**14,299**

Key: CO_2 = carbon monoxide; CH_4 = methane; and CO_{2eq} = CO_2 equivalent.

Table 4-10 provides a summary comparison of estimated total emissions between the two action alternatives. Table 4-11 provides a summary comparison of the percent increase in emissions between Alternative B and Alternative C.

Table 4-10. Summary comparison of estimated total emissions in tons between Alternative B (7 horizontal wells) and Alternative C (22 directional wells).

	NO_x	CO	VOC	PM_{10}	$PM_{2.5}$	SO_2	CO_2	CH_4	CO_{2eq}	CO_{2eq} metric tons
Total Emissions Alternative B (7 Horizontal Wells)	13.9	37.59	1.96	24.29	2.45	3.57	2,164	13.7	2,443	2,228
Total Emissions Alternative C (22 Directional wells)	115	39.2	9.9	92.2	15.6	2.6	14,790	43.6	15,723	14,299

Key: CO = carbon monoxide; CO_2 = carbon monoxide; CO_{2eq} = CO_2 equivalent; CH_4 = methane; NOx = nitrogen oxide; PM_{10} = particulate matter with an aerodynamic diameter equal to or less than 10 microns; $PM_{2.5}$ = Particulate matter with an aerodynamic diameter equal to or less than 2.5 microns; SO_2 = sulfur dioxide; and VOC = volatile organic compounds.

Table 4-11. Summary comparison between Alternative B and Alternative C of increased emissions.

	NO_x	CO	VOC	PM_{10}	$PM_{2.5}$	SO_2
Total Emissions for the FFO Planning Area	59,554.2	168,104.9	180,541.5	159,068	24,379.4	13,440.6
Total Emissions Alternative B (7 Horizontal Wells)	13.93	37.59	1.96	24.29	2.45	3.57
Total Emissions Alternative C (22 Directional Wells)	115	39.2	9.9	92.2	15.6	2.6
Percent Increase Emissions Alternative B (7 Horizontal Wells)	0.0002	0.0002	0.00001	0.0002	0.0001	0.0003
Percent Increase Emissions Alternative C (22 Directional wells)	0.002	0.0002	0.00005	0.0006	0.0006	0.0002

Key: CO = carbon monoxide; NOx = nitrogen oxide; PM_{10} = particulate matter with an aerodynamic diameter equal to or less than 10 microns; $PM_{2.5}$ = Particulate matter with an aerodynamic diameter equal to or less than 2.5 microns; SO_2 = sulfur dioxide; and VOC = volatile organic compounds.

4.3.3 Cumulative Effects

The FFO manages Federal hydrocarbon resources in San Juan, Sandoval, Rio Arriba, and McKinley counties. There are approximately 23,522 wells in the San Juan Basin. About 16,435 of the wells in these counties are Federal wells. Analysis of cumulative impacts for reasonable development scenarios and RFDS of oil and gas wells on public lands in the FFO was presented in the 2003 RMP. This included modeling of impacts on air quality. A more detailed discussion of Cumulative Effects can be found in the Air Resources Technical Report (USDI/BLM 2011*b*).

4.3.3.1 Cumulative Effects on Air Resources

The following analysis of cumulative impacts on air quality will be limited to the Four Corners area of New Mexico. The cumulative impacts of GHG emissions and their relationship to climate change are evaluated at the national and global levels in the Air Resource Technical Report (USDI/BLM 2011*b*).

4.3.3.2 Effects of Other Past, Present, and Reasonably Foreseeable Actions on Air Resources

The primary activities that contribute to levels of air pollutant and GHG emissions in the Four Corners area are electricity generation stations, fossil fuel industries, and vehicle travel. The Air Quality Technical Report includes a description of the varied sources of national and regional emissions that are incorporated here to represent the past, present, and reasonably foreseeable impacts to air resources (USDI/BLM 2011*b*). It includes a summary of emissions on the national and regional scale by industry source. Sources that are considered to have notable contributions to air quality impacts and GHG emissions include electrical generating units, fossil fuel production (nationally and regionally), and transportation.

4.3.3.3 Cumulative Effects of Alternative B or Alternative C on Air Resources

The emissions calculator estimated that there could be very small direct and indirect increases in several criteria pollutants, HAPs, and GHGs as a result of implementing either Alternative B or Alternative C. Table 4-11. Summary comparison between Alternative B and Alternative C of increased emissions. (Summary comparison between Alternative B and Alternative C of increased emissions) documents that the difference in emissions between Alternative B and C are very small compared to total emissions for the FFO analysis area and are not likely to be measurable. The very small increase in emissions that could result from approval of either alternative would not be expected to result in exceeding the NAAQS for any criteria pollutants in the analysis area.

4.3.3.4 Cumulative Effects of the Proposed Action on Climate Change

The very small increase in GHG emissions that could result from implementing either Alternative B or Alternative C would not produce climate change impacts that differ from the No Action Alternative. This is because climate change is a global process that is impacted by the sum total of GHGs in the Earth's atmosphere. The incremental contribution to global GHGs from the action alternatives cannot be translated into effects on climate change globally or in the area of this site-specific action. It is currently not feasible to predict with certainty the net impacts from the action alternatives on global or regional climate.

The Air Resources Technical Report (USDI/BLM 2011*b*) discusses the relationship of past, present, and future predicted emissions to climate change and the limitations in predicting local and regional impacts related to emissions. It is currently not feasible to know with certainty the net impacts from particular emissions associated with activities on public lands.

4.4 Cultural Resources

4.4.1 Direct and Indirect Effects of Alternative B (Proposed Action) on Cultural Resources

Direct effects normally include alterations to the physical integrity of a cultural resource. If a cultural resource is significant for reasons other than its scientific information, direct effects may also include the introduction of audible, atmospheric, or visual elements that are out of character for the cultural site. A potential indirect effect could be the increase in human activity or access to the area with the increased potential of unauthorized removal or other alteration to cultural resources in the area.

Effects to significant cultural sites would be avoided by adherence to BLM/FFO cultural resources requirements, based on the archaeological survey report recommendations and the results of the BLM field check. These requirements would be detailed in the Cultural Resource Record of Review, attached to the COAs in each APD. These protective requirements/design features include but are not limited to the placement of temporary barriers between construction activity and cultural sites, as well as archaeological monitoring during construction in proximity to cultural sites.

4.4.2 Cumulative Effects of Alternative B (Proposed Action) on Cultural Resources

Cumulative effects to significant cultural sites would be avoided by adherence to BLM/FFO cultural resources requirements. Positive cumulative effects would be the additional scientific information gained from the archaeological surveys.

4.4.3 Direct and Indirect Effects of Alternative C on Cultural Resources

Although 40-acre spacing units have been identified as open for future drilling, site-specific drilling locations under Alternative C have not been identified. Should APDs be submitted in the future, impacts to cultural resources would be addressed in site-specific analyses. Detailed cultural resource inventory data would be compiled for any specific drilling locations pursued in the future and would be in accordance with the *Procedures for Performing Cultural Resources Fieldwork on Public Lands in the Area of New Mexico BLM Responsibilities* (USDI/BLM 2005). The site-specific cultural resource inventory reports would be submitted to the BLM/FFO. Typically, previous Section 106 consultations for projects in the FFO planning area have resulted in determinations of no effect.

4.4.4 Cumulative Effects of Alternative C on Cultural Resources

Impacts would be similar to those described under the Proposed Action. However, since Alternative C would result in more surface disturbance, the potential for impacts to cultural resources could be greater under this alternative. Similar protective requirements/design features would be implemented. Where warranted.

4.5 Soils

4.5.1 Direct and Indirect Effects of Alternative B (Proposed Action) on Soils

Construction would result in temporary displacement, compaction, and mixing of approximately 59 acres of soils. Approximately 4 acres would remain as bare, compacted soil for the life of the project (approximately 30 years) and would be subject to an undetermined amount of wind and water erosion until the well pads are completely reclaimed. Approximately 0.5 acre of long-term disturbance would occur at the drilling entry/exits points and on a small portion of new road that would be constructed. The road construction would result from rerouting an existing road in order to avoid impacting cultural resources. Compaction of the soils during construction and operation, coupled with the implementation of design features, would limit soil impacts from erosion. The most susceptible period for soil erosion impacts is during construction when strong winds or precipitation events during soil-disturbing activities could mobilize soils. On all proposed pads, drainage will be restored at reclamation. Silt traps will be installed as needed. Culverts will be installed if needed.

4.5.2 Cumulative Effects of Alternative B (Proposed Action) on Soils

The cumulative impact assessment area for soils is the Navajo Reservoir watershed. The PRMP/FEIS determined that "cumulative impacts on soils in the San Juan Basin would comprise the total amount of short-term and long-term surface disturbance due to all new oil and gas development and other activities" (USDI/BLM 2003*a*, page 4-123).

Navajo Reservoir watershed contains 378,389 acres with approximately 1,334 existing oil and gas wells, approximately 7,951 acres of existing disturbance, and a road density of approximately 1.8 miles per square mile (USDI/BLM 2003*a*, page 3-3). Cumulatively, long-term disturbance is associated with wells and facilities related to the development of oil and gas resources, including injection wells, roads, corridors for gathering lines and utilities, compressor stations, and ancillary facilities. At some future date, these wells and facilities would be reclaimed when gas production drops below an economic level.

Reasonably foreseeable development within the Navajo Reservoir watershed may include an estimated additional 1,256 oil and gas wells and related facilities. Surface-disturbing activities that would be associated with these actions may affect an estimated 4,707 acres for the long term, including wells, pipeline, roads, and all associated facilities (USDI/BLM 2003*a*, page 4-7). Other reasonably foreseeable actions expected within the watershed are livestock grazing, recreation including off-road vehicle travel, fire management activities such as prescribed burns, and non-native invasive species control.

The PRMP/FEIS determined that "cumulative impacts on soils in the San Juan Basin would comprise the total amount of short-term and long-term surface disturbance due to all new oil and gas development and other activities" (USDI/BLM 2003*a*, page 4-123). Under the Proposed Action, cumulative effects from soils would occur from the development of approximately 62 acres associated with the expansion of eight existing well pads, two fluids management pits, and the water line. Approximately 8.5 acres of long-term disturbance would impact soils in the watershed.

4.5.3 Direct and Indirect Effects of Alternative C on Soils

Approximately 26 acres of soils would be disturbed resulting in mixing, compaction, and soil loss. Approximately 3.8 acres would remain as bare, compacted soil for the life of the project (approximately 30 years) and would be subject to an undetermined amount of wind and water erosion until the well pads are completely reclaimed. Compaction of the soils during construction and operation, coupled with the implementation of design features, would limit soil impacts from erosion.

4.5.4 Cumulative Effects of Alternative C on Soils

Alternative C could cumulatively effect up to 116 acres of soils, with long-term disturbance affecting 69 acres. These impacts would be more widespread than the Proposed Action as 27 well pads would be expanded as opposed to 8 well pads; therefore soils in more locations would be affected. Also these locations would be located throughout the Middle Mesa portion of the Rosa Unit.

4.6 Vegetation

4.6.1 Direct and Indirect Effects of Alternative B (Proposed Action) on Vegetation

Direct short-term impacts to approximately 59 acres of vegetation would result from well pad and water line construction and the road reroute. Those areas not needed for access and well operation would be reclaimed following completion. However, there would be long-term vegetation loss as final reclamation would not occur until the wells are abandoned. The fluids management pits, road abandoned for the reroute, and the water line outside existing roads would be completely reclaimed following construction. Long-term vegetation loss would impact approximately 4.5 acres. Indirect impacts would include a change in species composition and density in vegetation communities. Woodland areas would take generations to return to current conditions. Approximately 500 piñon and juniper trees of varying ages and sizes could be removed by the Proposed Action. The potential for the introduction and spread of invasive species would increase in disturbed areas. These impacts would occur over approximately 26 acres where new disturbance would occur. Those areas not needed for operation and access would be reseeded with an approved BLM seed mix following construction. Stockpiled topsoil will be utilized, and amendments added if necessary, for proper revegetation.

4.6.2 Cumulative Effects of Alternative B (Proposed Action) on Vegetation

The cumulative impacts analysis area for vegetation is the BLM/FFO planning area. Within the FFO planning area there are approximately 633,400 acres of piñon-juniper and approximately 435,500 acres of Great Basin Desert Shrub habitat types (USDI/BLM 2003*a*, page 3-31).

The majority of the foreseeable oil and gas development would likely occur within the shrubland/big sagebrush community as well as the level areas of the piñon-juniper community. The reasonably foreseeable future actions for oil and gas development that may be expected within the steep slope piñon-juniper community would probably be limited to connecting access roads and pipeline ties. It could be estimated that 60 percent of the reasonably foreseeable future disturbed acreage (including existing and future long-term disturbances) may occur in the desert grassland and Great Basin desert scrub

communities, and approximately 40 percent may occur within the piñon-juniper and juniper savannah communities. Based on the acres of plant community types within the planning area and the estimated total disturbance of future activities, and given the above assumptions, approximately 2.7 percent of the desert grassland and Great Basin desert scrub communities and less than 1 percent of the piñon-juniper and juniper savannah communities would be disturbed within the planning area over 20 years under the reasonably foreseeable future actions (USDI/BLM 2003*a*, page 3-31 and 4-7).

The Proposed Action could cumulatively affect about 62 acres of disturbed and undisturbed vegetation. Changes in vegetation composition and the potential for invasive, non-native species to establish would also cumulatively effect vegetation in the project area.

4.6.3 Direct and Indirect Effects of Alternative C on Vegetation

Alternative C could impact approximately 26 acres of vegetation in the short term. Impacts would result from the removal of vegetation from six existing well pads that would be expanded. Those areas not needed for access and well operation would be reclaimed following completion. There would be long-term impacts to approximately 3.8 acres of vegetation following interim reclamation. Indirect impacts would result from changes in vegetation composition and density, particularly in woodland areas. There would be a long-term potential for the introduction or spread of invasive, non-native species.

4.6.4 Cumulative Effects of Alternative C on Vegetation

Alternative C could cumulatively affect about 116 acres of disturbed and undisturbed vegetation. Changes in vegetation composition and the potential for invasive, non-native species to establish would also cumulatively effect vegetation in the project area.

4.7 Water Resources

4.7.1 Effects Common to Both Action Alternatives

Under both alternatives, vegetation removal and soils disturbance would result in an undetermined increase in sediment transfer. These increases would be expected to be minimal, localized, and proportional to the amount of disturbance. Sediment transfer reaching waterways would result in short-term impacts to surface water quality. These impacts would be greater during and following storm events when soils are more prone to mobilization. Impacts to water quality from sedimentation would continue until the disturbed areas are stabilized and, therefore, would be short term.

Minimal amounts of fuels, lubricants, and industrial materials (gas, diesel, etc.) would be used and stored on location. There would be the potential for accidental spills or releases of these materials, which could impact local water quality. A closed-loop system would be used for the oil-based mud to minimize potential impacts to surface and groundwater quality. A 4-ounce geotextile pad, a 30-mil reinforced liner, followed by an 8-ounce geotextile pad covered with approximately 12 inches of gravel will be laid down under the rig mats and all drilling machinery. The potential for surface water quality impacts from accidental spills or releases of hazardous materials on the well pads would be long term for the life of the wells.

Hydraulic fracturing fluid is roughly 99 percent water but also contains numerous chemical additives as well as propping agents, such as sands. Chemicals added to stimulation fluids include friction reducers, surfactants, gelling agents, scale inhibitors, acids, corrosion inhibitors, antibacterial agents, and clay stabilizers. Stimulation techniques have been used in the United States since 1949 and in the San Juan Basin since the 1950s. Over the last 10 years, advances in multi-stage and multi-zone hydraulic fracturing have allowed development of gas fields that previously were uneconomic, including the San Juan Basin.

As new oil and gas plays are discovered and produced in the United States, concerns about contamination to underground drinking water sources have arisen. In 2009, the USEPA initiated a groundwater investigation near Pavillion, Wyoming, in response to domestic water well owners. Domestic water wells in the area investigated overlie the Pavillion gas field where wells extract gas from the lower Wind River formation and underlying Fort Union Formation. Hydraulic fracturing in gas production wells occurred as shallow as 1,220 feet below ground surface with associated surface casing as shallow as 360 feet. Yet, some domestic and stock wells in the area were as deep as 800 feet (DiGiulio et al. 2011).

The study data indicated that detected higher chemical concentrations could possibly be explained by hydraulic fracturing. However, wellbore design and integrity issues could also be causative factors in elevated groundwater chemical concentrations in the area. A review of well completion reports and cement bond/variable density logs indicated instances of sporadic bonding outside production casing directly above intervals of hydraulic fracturing—that is, surface casing of production wells did not extend below the deepest domestic wells. Additionally, the producing zone had minimal lateral and vertical continuity and no laterally continuous shale units to act as a barrier to upward vertical migration of aqueous solutions. Therefore, vertical migration of fluids could also occur from nearby wellbores that were not adequately cemented. Study results have not been finalized and are inconclusive (DiGiulio et al. 2011). The USEPA has not verified any instances of groundwater contamination from hydraulic fracturing in the United States.

Hydraulic fracturing is a common process in the San Juan Basin and applied to nearly all wells drilled. Hydraulic fracturing would occur under both action alternatives. There are no verified instances of hydraulic fracturing adversely affecting groundwater in the San Juan Basin (USDI/BLM 2011*a*, page 54). The producing zone targeted by the Proposed Action is well below any underground sources of drinking water. Underground drinking water sources in the project area occur at depths of less than 300 feet below the ground surface. The Mancos Shale formation is also overlain by a continuous confining layer. On average, total depth of each well bore would be 6,700 feet below the ground surface. Fracturing in the Basin Mancos formation is not expected to occur above depths of 5,700 feet below the ground surface. Fracturing could possibly extend into the Mesaverde formation overlying the Basin Mancos; however, the formation has not been identified as an underground source of drinking water based on its depth and relative high levels of TDS. Additional information concerning micro-seismic data can be found in the Middle Mesa POD EA (USDI/BLM 2011*a*, pages 53-56). Based on hydraulic fracturing micro-seismic data, the depth of the Mancos Shale target zone, the continuous confining layer of the Mesa Verde group overlying the formation, and strict regulatory oversight, no impacts to freshwater-bearing groundwater aquifers are expected to occur from hydraulic fracturing.

Contamination of groundwater could occur without adequate cementing and casing of the proposed well bore. Casing specifications are designed by WPX Energy, and a casing program is submitted to the BLM.

The BLM independently verifies the casing program, and the installation of the casing and cementing operations are witnessed by certified Petroleum Engineering Technicians. Surface casing setting depth is determined by regulation. Adherence to APD COAs and other design measures would minimize potential effects to groundwater quality. The potential for impacts to groundwater from the well bores would be long term for the life of the wells.

4.7.2 Direct and Indirect Effects of Alternative B (Proposed Action) on Water Resources

The Proposed Action would temporarily expose a maximum of 59.1 acres of soil as a sediment source entering area drainage ways. Of this, approximately 26 acres have been previously disturbed. There would be long-term impacts to about 4.5 acres. Impacts to surface water quality from sediment transfer would be short term given the amount of acreage affected and would be minimized by implementing measures that would stabilize soils following well completion.

Approximately 10 to 12 stimulation stages (every 500 feet) would be needed for each horizontal well bore to stimulate the formation, with each stage requiring approximately 10,000 bbls (1.29 ac-ft) of fluid. Stimulation fluid would be recycled for reuse with approximately one-third of the total volume expected to be reused. Approximately 120,000 bbls (15.5 ac-ft) of produced water would be needed per well. A total of 90 ac-ft of water could be used for hydraulic fracturing for the seven wells proposed. No freshwater sources would be used for drilling or completion. Rather, produced water from existing wells would be used and recycled. Currently, WPX Energy's existing wells on Rosa Mesa generate approximately 6,000 to 12,000 bbls of produced water daily. This produced water is transported to an existing saltwater disposal well and reinjected deep underground into the Entrada Formation, as required by regulation. Under the Proposed Action, produced water from an existing liquid gathering system on Rosa Mesa would be transported via a subsurface water line to Middle Mesa and stored in the two fluids management pits. During completion, the produced water would be transported through two temporary aboveground steel water lines to the well being completed. Approximately one-third of the fluid may flowback to the well head where it would be transported back to the fluids management pit. The flowback would be filtered and treated before entering the pit.

There is the potential for the water line to rupture or develop a leak, releasing produced water to the surface or below ground. The life of the pipeline would be 50 to 60 years, but it could be even longer with cathodic protection internal corrosion control and good maintenance. The line under the lake would be a 6-inch outside diameter seamless pipe that would be coated to protect against damage during transportation and installation. The pipe would also be coated to ensure integrity if operating under high temperature and to protect against corrosion. An induced current cathodic protection system strictly dedicated to the under-lake water line would protect the integrity of the pipe during operation. The system would be a 36 volt alternating current rectifier supplying continuous protection to the pipe's external surface. The external cathodic protection system would be monitored on a regular basis. Material reference coupons would be located at the entry and exit points of the under-lake water line. This equipment would determine whether any internal pipe material loss is occurring. The water and coupons would be inspected and tested for bacterial and material loss within 30 days of installation and then every 90 days for the life of the line. Chemical treatments with a corrosion inhibitor and biocide would be conducted as needed based on water samples and bacterial cultures. It is WPX Energy's typical practice

to administer chemical treatments within a pipeline via continuous injection. The volume of water and presence of bacteria would dictate chemical treatment volumes.

The water line would have metering and pressure control valves installed on each side of the reservoir as a safety precaution. The water line would have a “slam-shut” valve on each side of the lake with automation to detect pressure on both sides of the lake. A “slam-shut” valve is designed to quickly close in case of emergency or during maintenance operations. If inconstant pressure is detected on the water line, the valves on both sides of the lake would close. The water line metering and pressure control valves and leak detection equipment would be continuously monitored via telemetry. In the unlikely event of a failure of the shut-off valves or other issue, monitoring equipment would notify WPX Energy so that manual override would take place. WPX Energy has staff on call for these events. The water line under the reservoir would also be pressure tested on a semi-annual basis to identify any pinhole leaks.

There is also the potential for the fluids management pits to leak, releasing produced water above ground. The fluids management pits would have a primary (upper) liner and a secondary (lower) liner with a leak detection system between the upper and lower liners. Additionally, a tertiary liner would be located below the secondary liner. The geomembrane liners would be 60-mil high density polyethylene (HDPE) (primary) and 40-mil HDPE (secondary) impervious, synthetic material that is resistant to petroleum hydrocarbons, salts, acidic and alkaline solutions, and ultraviolet light. The leak detection system would be automated via ultrasonic or radar within the leak detection monitoring stand pipe. The system would be wirelessly transmitted from the stand pipe unit to a remote operations controller. The controller would be the electrical and programmable box physically on the location that would interface between the signal given from the end device (the water sensor in the leak detection tube) and a computer-controlled system. The system would monitor at 30-minute intervals. Should a leak be detected, monitoring equipment would immediately notify multiple WPX Energy personnel.

Based on the structural safeguards discussed above, it is unlikely that the water line or fluids management pits would rupture or leak. The proposed water line would be operating at low pressures, about 200 psi (pounds per square inch), which also minimizes the potential for ruptures or leaks. Any produced water or flowback fluid that might be released, either above or below ground, would likely be minimal as monitoring equipment would rapidly identify any ruptures or leaks. Produced water quality is not comparable to drinking water or water used for livestock. Water quality of produced water and flowback that would be transported in the water line or stored in the fluids management pits is projected to have slightly elevated metal concentrations, high TDS levels from salts and chlorides, and hydrocarbons present.

Only a complete rupture of the water line would cause the total loss of water to the surface or underground. The length of the water line under Navajo Reservoir is about 7,000 feet with a volume of 6,000 gallons (0.018 ac-ft). This portion of the line would be isolated by pressure valves on either side of the lake. Navajo Reservoir contains a volume of over 1,000,000 ac-ft of water (USBR 2012). Should the line rupture and release above ground, the volume of water that could enter the reservoir would be nearly immeasurable (0.000018 percent) in comparison to the reservoir volume and would be diluted almost immediately. Should the line rupture underground, it is unlikely that this volume of water would migrate through the bedrock and enter the reservoir. A pinhole leak in the water line is more possible than a rupture. Any leaks would be detected by the automated leak-detection system, the line would be taken out

of service, and water removed by pigging. The line would then be repaired or abandoned. A pinhole leak could release minor amounts of produced water, however, based on the depth of the line within bedrock, migration into Navajo Reservoir would be highly improbable. No measurable effects to Navajo Reservoir water quality would be expected to occur from a water line rupture or leak.

The fluids management pits would contain water below ground level; therefore, a surface release of the total pit water volume is not expected to occur. The pit volume would be no more than 56 ac-ft. Should the pit develop a leak, it would be identified almost immediately, and a minimal amount of fluid could be released. This volume of water would not be sufficient to reach Navajo Reservoir between 2,500 feet and 1 mile away. Should a leak occur, there could be potential short-term effects to surface water or groundwater quality in the immediate area. These effects would be limited to increasing the concentrations of some metals, salts, and hydrocarbons in the soil surrounding the leak. Based on the concentrations of these constituents in the produced water and the volume of water that could be released, these effects may not be measurable.

4.7.3 Cumulative Effects of Alternative B (Proposed Action) on Water Resources

The cumulative impact assessment area for water quality is the Navajo Reservoir watershed.

Reasonably foreseeable development within the Navajo Reservoir watershed may include an estimated additional 1,256 oil and gas wells and related facilities. Surface-disturbing activities that would be associated with these actions may affect an estimated 4,707 acres for the long term, including wells, pipeline, roads, and all associated facilities (USDI/BLM 2003*a*, page 4-7). Other reasonably foreseeable actions expected within the watershed are livestock grazing, recreation including off road vehicle travel, fire management activities such as prescribed burns, and non-native invasive species control. These surface-disturbing activities may cause accelerated erosion within the analysis area.

The PRMP/FEIS determined that the primary cumulative impacts on water quality would result from surface disturbance, which would generate increased sediment yields (USDI/BLM 2003*a*, pages 4-123 and 4-124). Cumulative effects to water resources from the Proposed Action would be maximized shortly after construction begins and would decrease over time as reclamation efforts proceed. The Proposed Action would cumulatively disturb about 62 acres within the watershed over an approximate 4- to 5-year period.

No freshwater resources would be used for drilling or completion. Thus, there would be no cumulative effects to water resource volumes in the planning area under the Proposed Action.

4.7.4 Direct and Indirect Effects of Alternative C on Water Resources

Site-specific locations have not been identified for Alternative C. However, 22 directional wells could be drilled under this scenario. This would result in disturbance to about 26 acres on six well pads. Long-term disturbance would affect about 3.8 acres. Impacts to surface water quality from sediment transfer would be short term because mitigation measures would stabilize soils following well completion. Before development, each well pad would be subject to site-specific environmental analysis at the time of APD submittal.

For stimulation, fresh water from a permitted water source would be trucked to tanks located on site (e.g., each well pad). Approximately 20 to 24 500-bbl tanks would be needed on site to store water for stimulation. Other equipment needed for stimulation would include pumps, engines, and flow lines. Approximately two stages (every 500 feet) would be needed for each vertical/directional well to stimulate the Basin Mancos formation, with each stage requiring approximately 5,000 bbls of fluid, for a total of approximately 10,000 bbls (1.29 ac-ft) per well. An estimated total of 28 ac-ft of water could be used to complete the projected 22 wells under Alternative C. Based on drilling nine wells per year, annual freshwater use would be approximately 14 ac-ft over the 2-year period. Water to construct, produce, and maintain actions under Alternative C would be acquired from permitted water sources. Because water is purchased from decreed commercial sources, depletions do not injure water rights holders in the basin

4.7.5 Cumulative Effects of Alternative C on Water Resources

Alternative C would affect approximately 116 acres over an estimated 8- to 9-year period within the Navajo Reservoir watershed. The effects to water resources from soil disturbance would decrease over time as reclamation efforts proceed.

A total of 156 ac-ft of fresh water could be used to stimulate vertical/directional wells under Alternative C. However, the amount of water used per year would be about 12 ac-ft annually, based on a nine-well-per-year drilling program. Because this water would be obtained from decreed sources, the volume of water used during reasonably foreseeable development, including drilling, would not affect water resources of the planning area (USDI/BLM 2003*a*, page 4-7).

4.8 Wildlife

4.8.1 Direct and Indirect Effects from Alternative B (Proposed Action) on Wildlife

The Proposed Action would be located within the Middle Mesa Wildlife Area and Rosa Mesa Wildlife Area SDAs. The Rosa Mesa Wildlife Area SDA has seasonal restrictions on construction and drilling activities during a 4-month period (December 1 through March 31) to protect the integrity of the habitat for wintering deer and elk. The proposed water line eastern segment would be located within the Rosa Mesa Wildlife Area SDA. The remainder of the Proposed Action would be located within the Middle Mesa Wildlife Area SDA.

In 2006, the BLM estimated that between 175 and 525 mule deer and elk use the Rosa Mesa Wildlife Area. The high variability in numbers is likely correlated to survey methodology factors, primarily weather. Snow or light conditions can affect the surveyor's ability to sight individuals or small herds (USDI/BLM 2008*a*). In 2006, the BLM estimated 100 to 150 mule deer and fewer than 50 elk use all of Middle Mesa (USDI/BLM 2008*a*). The New Mexico Department of Game and Fish characterizes the Middle Mesa SDA as low wintering big game density with good browse availability (USDI/BLM 2011*a*). In December 2011, the BLM/FFO approved the decision to grant WPX Energy a modification to the seasonal closure for the Middle Mesa portion of the Rosa Unit for an approximate 5-year period imposing certain terms and conditions (USDI/BLM 2011*a*). However, this decision has been appealed to the Interior Board of Land Appeals (IBLA), and no decision has been issued yet.

Impacts to wildlife are dependent on a number of variables including timing, duration (years), and intensity. For the proposed activities, the primary impact to wildlife, especially deer and elk, is habitat loss and fragmentation in an environment that is already highly developed. Wildlife may also be exposed to increased mortality associated with increased vehicular traffic.

Direct habitat loss occurs through the removal of vegetation, which reduces the extent or quality of habitat in terms of food and cover. Habitat value to wildlife is lost when vegetation is removed; therefore, direct habitat loss can be quantified by comparing the area of habitat lost to the amount retained. The Proposed Action would impact approximately 59 acres, of which about 26 acres would be new disturbance. New disturbance would result in a direct habitat loss for big game and other wildlife. The majority of direct habitat loss would be short term as areas reclaimed would recover their value as wildlife habitat. There would be a long-term direct habitat loss of approximately 4.5 acres associated with operation facilities and access.

No well pad or water line construction or stimulation activities would take place during the big game winter closure. Construction of the proposed eastern water line segment would result in short-term disturbance to big game and other wildlife from increased noise and activity. These impacts would last for the duration of water line construction and drilling under Navajo Reservoir, approximately 1 month.

Drilling could occur during the SDA winter closure. The Middle Mesa POD EA analyzed the effects on wintering big game from drilling from a single well pad during the SDA seasonal closure. The analysis was based on an approximate 5-year drilling program. The analysis found that wintering mule deer would be impacted through a loss of effective habitat from habitat fragmentation and disturbance. These impacts would be localized, that is centralized around the one active well pad and the access roads leading to it. The severity of impacts could be greater during winters with deep snow when movement is more difficult and browse more challenging to locate. The analysis concluded that these short-term impacts would affect individuals but were not expected to have population-level impacts (USDI/BLM 2011*a*, pages 60-64).

The Middle Mesa POD EA also analyzed the effects of increased traffic levels on big game. Under the Proposed Action, there could be an increase of 10 to 12 more vehicle trips during the winter closure period. There would also be an increase of 8 to 10 more vehicle trips during the remainder of the year under the Proposed Action (USDI/BLM 2011*b*, page 63). Direct impacts from vehicle traffic on roads could include incidental mortality to wildlife. Animal-vehicle collisions are variable depending on time of day, speed and volume of traffic, local topography, structural features of the road, and the size and behavior of the individual impacted (USDI/BLM 2011*b*, page 61). These impacts would be short term for the duration of drilling and completion.

Stimulation activities would occur outside the winter closure. Stimulation activities are not expected to increase the number of vehicle trips, but there would be spatial changes in traffic patterns within the project area as produced water on Middle Mesa would be trucked from existing well pads to the fluids management pits rather than the normal disposal site (USDI/BLM 2011*b*, page 63). The water line transporting produced water from Rosa Mesa to Middle Mesa would supplement produced water volumes needed for stimulation.

No long-term impacts to big game or other wildlife from vehicle traffic, above what are already occurring, would be expected. During operation and maintenance, vehicle trips would not be expected to

increase in the long term as workers would access one pad to maintain several wells and no new well pads are proposed (USDI/BLM 2011*b*, page 64).

Wildlife could come into contact with chemicals or fluids stored on site or in the fluids management pits. Covering of open cavities and lining, fencing, and netting the fluids management pits would restrict wildlife and minimize potential exposure risk. Any spills would be promptly cleaned up, and WPX Energy maintains an emergency response plan.

4.8.2 Cumulative Effects of Alternative B (Proposed Action) on Wildlife

The cumulative impacts analysis area for wildlife is the Middle Mesa Wildlife Area SDA, given its topographical isolation created by Navajo Reservoir. The natural boundaries that define most of Middle Mesa, the Pine River to the west, Navajo Reservoir to the east, and the San Juan River to the south, likely influence animal movement in the area. Also, although wildlife does not recognize political boundaries, Middle Mesa is defined to the north by the state line between Colorado and New Mexico. The proposed water line on Rosa Mesa would not result in cumulative impacts as it would be fully reclaimed, located within existing roadways, and direct impacts would be limited to approximately 1 month during construction.

The PRMP/FEIS evaluated impacts to wildlife within the nine designated Wildlife Area SDAs. Of the 397,000 acres in these SDAs, the analysis estimated a long-term habitat loss of 8,600 acres due to new disturbance. When added to the amount lost to existing development, the total long-term habitat loss was projected to be at least 27,000 acres (USDI/BLM 2003*a*, page 4-112). The ROD approving the final plan acknowledged these and future projected impacts, and considered them acceptable when balanced against the nation's need for domestic energy sources (USDI/BLM 2003*a*, 2003*b*, page 12). Other reasonably foreseeable actions, continued livestock grazing, habitat management, prescribed burns or other vegetation treatments would cumulatively impact big game and wildlife through direct habitat loss, effective habitat loss, and the potential for injury.

Cumulative habitat loss from the Proposed Action is expected to be 8.5 acres resulting from the long-term disturbance for operation and maintenance. Long-term impacts of the Proposed Action, years 6 to 30, would decrease slightly as some areas disturbed during the first 5 years recover their value as wildlife habitat. The scale and pace of the Proposed Action is consistent with planning area RFDS. Therefore, the impacts of this scenario are included in the ROD for the RMP (USDI/BLM 2003*a*, 2003*b*). Cumulative effects of the Proposed Action when added to other past, present, or reasonably foreseeable actions would not result in population level impacts.

4.8.3 Direct and Indirect Effects from Alternative C on Wildlife

No drilling during the winter closure would occur under Alternative C. WPX Energy would continue to drill approximately nine wells per year. No increased traffic levels are anticipated. Construction, drilling, and completion activities would result in a direct habitat loss of approximately 26 acres of vegetation. Interim reclamation of each new well pad would reduce the long-term loss of habitat to about 3.8 acres. Wildlife could come into contact with chemicals or fluids stored on site. Covering of open cavities would restrict wildlife and minimize potential exposure risk. Any spills would be promptly cleaned up, and

WPX Energy maintains a plan to cover eventualities that could arise from an accidental release of hazardous materials.

4.8.4 Cumulative Effects from Alternative C on Wildlife

Cumulative habitat loss under Alternative C would be related to approximately 33 acres of long-term disturbance from well operation and access. Long-term impacts of Alternative C, years 9 to 30, would decrease slightly as some areas disturbed during the first 9 years recover their value as habitat for big game and other wildlife.

4.9 Special Status Species

Four BLM special status species have the potential to occur on Middle Mesa and on Rosa Mesa where the proposed water line would be constructed. Potential foraging habitat for bald eagle, golden eagle, prairie falcon, and American peregrine falcon occurs within the project area.

4.9.1 Direct and Indirect Effects from Alternative B (Proposed Action) on Special Status Species

There would be no direct impacts to potential nesting habitat as none occurs in the proposed area of disturbance. Should any nesting raptors be identified before or during construction activities within one-third mile of proposed activities, the BLM/FFO biologist would be immediately contacted in order to evaluate whether additional resource protection measures are warranted. If needed, mitigation measures would be implemented to minimize impacts.

The Proposed Action would directly impact 59 acres of potential foraging habitat for BLM special status raptor species. Direct impacts would include the removal and modification of vegetation, including the loss of about 500 piñon and juniper trees that could serve as perch sites. There would be a long-term loss of approximately 4.5 acres of foraging habitat, which would overlap existing disturbance. The proposed well pads would be twinned with existing disturbance to minimize effects to raptors and habitat. Indirect impacts could include a change in prey species composition for raptors from the disturbance and modification of vegetation. These impacts would be short to long term and not expected to result in population level impacts given the abundance of suitable foraging habitat and the use of existing disturbance and the consolidation of multiple wells on single well pads..

During construction and drilling, increased human and vehicular activity may cause these raptors to avoid the area of potential effect. These effects would be short term and localized around the area where construction or drilling would be occurring. Raptors could come into contact with chemicals or fluids stored on site or in the fluids management pits. Covering of open cavities and lining, fencing, and netting the fluids management pits would restrict raptors and minimize potential exposure risk. Any spills would be promptly cleaned up, and WPX Energy maintains a plan to cover eventualities that could arise from an accidental release of hazardous materials.

The APDs would have COAs requiring WPX Energy to meet noise stipulations at ACECs located within the Middle Mesa Rosa Unit. Bald eagle ACEC units are designated as Noise Sensitive Areas. For these boundary-focused Noise Sensitive Areas, the NTL 03-1 (FFO) applies. For noise sources located outside

boundary-focused Noise Sensitive Areas, the standard is 48.6 decibels A weighted (dBA) Equivalent Continuous Noise Level at 400 feet in all directions from the noise source. Drilling from the proposed four well pads under the Proposed Action would be required to meet the noise stipulations outlined in the NTL 03-1. The Proposed Action would use natural gas-powered engines, which are approximately 67 percent quieter than diesel-powered engines.

4.9.2 Cumulative Effects from Alternative B (Proposed Action) on Special Status Species

The cumulative impacts analysis area for special status species is the BLM/FFO planning area.

The FFO would continue to manage non-federally listed species according to BLM policies and guidelines, with the goal of contributing to the conservation of these species to reduce the potential for being listed under the ESA of 1973, as amended (USDI/BLM 2003*a*, 4-111). For reasonably foreseeable actions on federal lands, direct impacts to nesting special status raptor species would be avoided through the BLM's siting criteria. Development on federal and private land would result in the removal or modification of potential foraging habitat. These effects would be related to availability of undisturbed habitat in the area and the amount of disturbance that would occur within the area. The PRMP/FEIS determined that cumulatively up to 5.5 percent (128,000 acres) of vegetation in the planning area could be impacted by oil and gas development (USDI/BLM 2003*a*, page 4-125). Other reasonably foreseeable actions within the planning area that could impact special status species would include livestock grazing, agriculture, commercial and residential development, mining, wildfire, and vegetation management.

The Proposed Action would cumulatively affect up to 62 acres of foraging habitat for four BLM special status raptor species. Existing disturbance would be used to the greatest extent to reduce the intensity of effects. Approximately 8.5 acres of long-term disturbance would result in a reduction in foraging habitat. After about 5 years when construction and drilling have been completed, no cumulative effects from disturbance above what is already occurring would be expected. No cumulative effects to any other BLM special status species would occur.

4.9.3 Direct and Indirect Effects of Alternative C on Special Status Species

Under Alternative C, six locations would be developed to drill 22 wells. Site-specific locations have not yet been identified. Middle Mesa contains habitat for the four species listed above. Direct impacts to nesting raptors or nesting habitat would be avoided or minimized by the BLM/FFO's pre-development siting criteria.

Alternative C would result in short-term disturbance of approximately 26 acres and long-term disturbance of 3.8 acres. Other direct impacts would include temporary avoidance during construction and drilling. Before development, each well pad would be subject to site-specific environmental analysis at the time of APD submittal. Site-specific evaluations conducted by the BLM/FFO would evaluate the potential for impacts to these species and develop design features to minimize or avoid impacts.

4.9.4 Cumulative Effects of Alternative C on Special Status Species

Alternative C could cumulatively impact up to 116 acres of potential foraging habitat for four BLM special status raptor species. Since existing locations would be expanded, the intensity of these impacts would be minimized. Approximately 33 acres of long-term disturbance would result in a reduction in raptor foraging habitat. After about 9 years when construction and drilling have been completed, no cumulative effects from disturbance above what is already occurring would be expected.

4.10 Migratory Birds

4.10.1 Direct and Indirect Effects of Alternative B (Proposed Action) on Migratory Birds

Approximately 26 acres of new disturbance would affect a variety of tree, shrub, and ground-nesting birds. Approximately 500 piñon and juniper trees of varying ages and sizes would be removed during construction activities, resulting in a long-term loss of potential nesting and perching habitat for breeding birds. There would be a minimal increase in habitat fragmentation or edge effects since the Proposed Action would generally utilize and expand existing disturbance. The proposed water line would result in about 2.65 acres of new disturbance from two segments totaling 2,894 feet in length. Approximately 875 feet of road would be rerouted, also resulting in habitat fragmentation; however, this impact would be offset by closing a portion of an existing road. Following construction activities, disturbed areas would be reseeded with the appropriate BLM seed mix. Noxious weed control measures would minimize the spread of weeds in the project area.

Impacts to migratory birds would be greater from construction and drilling during the breeding season of April 15 through August 30. During the breeding period, disturbance to birds nesting adjacent to activities could result in nest abandonment or reduced nesting success. A pre-construction nest survey would be conducted along the water line and road re-route to identify any nesting bird species, and if needed, mitigation measures would be developed to avoid impacts.

Long-term disturbance would convert approximately 4.5 acres to industrial use, decreasing available foraging and nesting habitat. Sage sparrows, a priority bird species that utilizes sage grasslands that could occur in the project area, have territories that range in size depending on region. In Utah, the average sage sparrow territory was found to be 1.5 hectares (3 acres) (Martin and Carlson 1998). Gray vireos, which have been observed within the project area, are a priority bird species representative of the piñon-juniper woodland habitat type. Gray vireos have been documented as having territories ranging in size from 2 to 4 hectares (4 to 9 acres) (Barlow et al. 1999).

Construction activities would be confined to the proposed project area to avoid further disruption to migratory birds. During construction, a trash receptacle and a chemically treated portable toilet will be on location for trash and sewer disposal. Any spills would be promptly cleaned up, and WPX Energy maintains a plan to cover eventualities that could arise from an accidental release of hazardous materials. Any open cavities would be covered. Any pits containing hydrocarbons would be netted. The fluids management pits would be lined, fenced, and netted. Any active bird nests found within the proposed

project area would be reported to a BLM/FFO biologist for appropriate mitigation prior to construction activities.

4.10.2 Cumulative Effects of Alternative B (Proposed Action) on Migratory Birds

The cumulative impact analysis area for migratory birds is the Navajo Reservoir watershed.

Reasonably foreseeable development within the Navajo Reservoir watershed may include an estimated additional 1,256 oil and gas wells and related facilities. Surface-disturbing activities that would be associated with these actions may affect an estimated 4,707 acres for the long term, including wells, pipeline, roads, and all associated facilities (USDI/BLM 2003*a*, page 4-7). Long-term disturbance in the watershed would affect about 1 percent of the watershed. Other reasonably foreseeable actions expected within the watershed are livestock grazing, recreation including off road vehicle travel, fire management activities such as prescribed burns, and non-native invasive species control. These surface-disturbing activities would result in a reduction in migratory bird habitats. Activities on federal lands would minimize effects through the use of pre-siting criteria, pre-construction nest surveys, and other design features. Impacts on private lands could result in nest destruction or decreased nesting success.

The Proposed Action would result in habitat fragmentation along approximately 2,894 feet associated with cross-country segments of the water line. There would be a combined reduction of approximately 29 acres of foraging and nesting habitat resulting from new disturbance: 26 acres from the Proposed Action and 3 acres from reasonably foreseeable development associated with the action. This habitat reduction would occur at the four well pads and the drill entry/exit locations east and west of Navajo Reservoir. Assuming approximately 60 percent of the 29 acres of new disturbance is sage-grassland with the remainder piñon-juniper woodland, approximately 17 acres of sage-grassland and 12 acres of piñon-juniper woodland would be affected under the Proposed Action. This amount of habitat acreage equates to about six sage sparrow territories and three to six gray vireo territories. Since cumulative effects would utilize existing disturbance where the habitat quality has been decreased, actual effects from habitat removal would be less. The Proposed Action could affect individual migratory birds through habitat reduction; but based on the level of disturbance and the use of existing infrastructure, no population-level impacts would occur. After about 5 years when construction and drilling have been completed, no cumulative effects from disturbance to migratory birds above what is already occurring would be expected.

4.10.3 Direct and Indirect Effects of Alternative C on Migratory Birds

Alternative C would expand six existing well pads to drill 22 vertical/directional wells. Site-specific locations have not yet been identified. Site-specific evaluations conducted by the BLM/FFO would evaluate the potential for impacts and develop design features to minimize those impacts. This alternative would result in short-term disturbance of approximately 26 acres and long-term disturbance to 3.8 acres. No additional habitat fragmentation is expected to occur as existing infrastructure would be used.

Disturbance impacts to migratory birds would result from construction and drilling during the breeding season of April 15 through August 30. During the breeding period, disturbance to birds nesting adjacent to activities could result in nest abandonment or reduced nesting success. There is the potential for migratory birds to be exposed to minor amounts of chemicals or fluids during drilling and operation.

Design features such as netting or covering any open cavities would be applied to minimize these potential impacts.

4.10.4 Cumulative Effects of Alternative C on Migratory Birds

Since site-specific locations have not been identified, the amount of new disturbance cannot be quantified. However, assuming approximately 60 percent of the 33 acres of long-term disturbance is sage-grassland with the remainder piñon-juniper woodland, approximately 20 acres of sage-grassland and 13 acres of piñon-juniper woodland could be cumulatively affected. This amount of habitat acreage equates to about seven sage sparrow territories and three to six gray vireo territories. Alternative C could affect individual migratory birds through habitat reduction; but based on the level of disturbance, the widespread locations where disturbance would occur, and the use of existing infrastructure, no population-level impacts would be expected. After about 9 years when construction and drilling have been completed, no cumulative effects from disturbance to migratory birds above what is already occurring would be expected.

4.11 Socioeconomics

Socioeconomic impacts are measured by the direct and indirect changes to employment, income, and government revenues generated by the alternatives. These changes are estimated using the IMPLAN 3 model and 2010 data for the counties in the affected area, including San Juan and Rio Arriba, New Mexico, as well as La Plata and Archuleta, Colorado.

4.11.1 Direct and Indirect Effects of Alternative B (Proposed Action) on Socioeconomics

The total natural gas production for the Proposed Action is estimated to be 30 bcf. Using an average natural gas price from U.S. Department of Energy (USDOE) market forecasts of $4.14 per Mcf, the estimated total production value is $120 million or approximately $6 million per year (USDOE 2010). It is estimated that the Proposed Action will support 64 jobs and an estimated payroll including benefits of about $6 million per year. The indirect impacts of the natural gas production (output) from the Proposed Action would include 11 additional jobs in the local economy in equipment sales, professional services, and transportation industry. The indirect labor income associated with these jobs would amount to almost $0.5 million annually.

This production value would generate a total of about $0.5 million to the State of New Mexico and San Juan County through severance taxes annually, assuming a tax rate of 8.84 percent. In addition, there would be approximately $0.75 million in Federal royalties, assuming a rate of 12.5 percent, paid to the U.S. Federal Government with about half being disbursed to the State of New Mexico as the state's share of Federal royalty.

4.11.2 Cumulative Effects of Alternative B (Proposed Action) on Socioeconomics

Cumulative socioeconomic impacts are estimated for each of the alternatives by estimating the activities and production associated with full field development using either horizontal or directional drilling techniques. The cumulative impacts analysis area for socioeconomics is the BLM/FFO planning area.

The PRMP/FEIS notes that "Overall, the effect of oil and gas development on land with non-federal minerals over 20 years would benefit economic activity in the planning area" (USDI/BLM 2003*a*, page 4-129). A recent analysis for San Juan County, New Mexico, examined some of the potential consequences of a worst-case scenario in which one-half of the energy and extractive industry jobs are lost over a 15-year period. Given the trends in oil and gas resource depletion in the San Juan Basin and changes to air quality standards, a decline in energy and extractive industry jobs in San Juan County is reasonably foreseeable. These job losses would increase the county unemployment rate to between 15 and 18 percent (USDI 2011*b*, pages 85-86).

The natural gas production for the Proposed Action is estimated to be 275 bcf. Using an average natural gas price from USDOE energy market forecasts of $4.14 per Mcf, the total estimated production value is $1,100 million (USDOE 2010). This production value would generate a total of about $100 million to the State of New Mexico and San Juan County through severance taxes, assuming a tax rate of 8.84 percent. In addition, there would be approximately $143 million in Federal royalties, assuming a royalty rate of 12.5 percent, paid to the U.S. Federal Government with about half being disbursed to the State of New Mexico. The 64 jobs and government revenues from production taxes would have a beneficial impact to the socioeconomics of the affected area.

4.11.3 Direct and Indirect Effects of Alternative C on Socioeconomics

The natural gas production that would occur under Alternative C (directional drilling) is estimated to be about one-quarter of the production for the Proposed Action or about 7 bcf. Using an average natural gas price from USDOE energy market forecasts of $4.14 per Mcf, the estimated production value is $30 million or about $1.5 million per year (USDOE 2010). It is estimated that Alternative C would support 60 jobs and an estimated payroll including benefits of about $5.5 million per year. The indirect impacts of the natural gas production (output) from Alternative C would include 10 additional jobs in the local economy in equipment sales, professional services, and transportation industry. The indirect labor income associated with these jobs would amount to almost $0.4 million annually.

This production value would generate a total of about $130,000 to the State of New Mexico and San Juan County annually through severance taxes, assuming a tax rate of 8.84 percent. In addition, there would be approximately $187,500 million in Federal royalties, assuming a rate of 12.5 percent, paid to the U.S. Federal Government with about half being disbursed to the State of New Mexico as the state's share of Federal royalty.

4.11.4 Cumulative Effects of Alternative C on Socioeconomics

Full field development using direction drilling techniques would result in a total of 109 wells being developed. Total production would be about 25 percent of that achieved with horizontal drilling techniques or approximately 70 bcf. This production value would generate a total of about $25 million to the State of New Mexico and San Juan County through severance taxes, assuming a tax rate of 8.84 percent. In addition, there would be approximately $36 million in Federal royalties, assuming a rate of 12.5 percent, paid to the U.S. Federal Government with about half being disbursed to the State of New Mexico. The 64 jobs and government revenues from production taxes would have a beneficial impact to the socioeconomics of the affected area.

4.12 Transportation and Traffic

4.12.1 Direct and Indirect Effects of Alternative B (Proposed Action) on Traffic and Transportation

The analysis conducted for the Middle Mesa POD determined that there would be an increase of approximately 10 to 12 vehicle trips per day during the winter closure period (USDI/BLM. 2011*a*). Table 4-12 provides a summary of the average daily vehicle trips per alternative. Roads are expected to be used more frequently during construction and drilling of wells than during maintenance and production stages. The number of vehicle trips during the remainder of the year would be similar to the existing baseline: an average of 30 vehicle trips per day. Design measures such as the residential camp and use of produced water for stimulation have been developed to minimize the number of vehicle trips under the Proposed Action.

Table 4-12. Summary average daily vehicle trips per alternative.

During Drilling and Completion			
	Alternative B	**Alternative C [1]**	**Percent Difference**
Average Daily Vehicle Trips Between December and March	20	12	60
Average Daily Vehicle Trips Remainder of the Year	30	30	No Change
During Operation			
Total Annual Vehicle Trips	8,640	8,640	No Change
Average Daily Vehicle Trips Between December and March	25	25	No Change
Average Daily Vehicle Trips Remainder of the Year	25	25	No Change

1 Alternative C would not increase traffic levels above the current baseline as WPX Energy currently drills about 9 wells per year and would continue to drill about 9 wells a year.

Based on an increase of 12 vehicle trips per day during the winter closure, Table 4-13 shows the estimated percent increase on La Plata County Roads from the Proposed Action. Given the fluctuation in traffic counts on La Plata County Roads 330 and 328 (refer to Table 3-8), the average daily traffic counts in Table 4-13 are an average of the last 4 years for each segment.

Table 4-13. Summary estimated total vehicle trips and average daily vehicle trips per alternative.

Road Segment	Location	4-Year Average Daily Vehicle Trips	Increase from Proposed Action	Percent Increase
County Road 328	At Highway 151	523	12	2.3
County Road 328	North of state line	179	12	6.7
County Road 330	South of County Road 329	657	12	1.8
County Road 330	North of state line	627	12	1.9

Vehicle trips for operation and maintenance would not measurably increase as workers would access one pad to maintain several wells (USDI/BLM 2011*a*, pages 71-73). The Proposed Action is consistent with the pace and scale of natural gas development included in the RFDS for the PRMP/FEIS, increased vehicle trips are assumed to be included in the 20,500 vehicle trips per day considered in the ROD.

Increased vehicle trips would result in wear and tear on roads and the potential for more regular maintenance. Industry within the BLM/FFO planning area has formed a roads committee, which maintains oil and gas access roads on a regular basis in San Juan County, New Mexico.

Currently, CDOT estimates that the average annual daily traffic on Highway 172 south of Highway 151 is 6,000 vehicle trips (CDOT 2011). At an increase of 12 vehicle trips per day, there would be about a 1.6 percent increase in average annual day traffic. Safety issues for pedestrians and drivers have been identified at the intersection of Highway 172 and Highway 151 given the volume and timing of traffic, and no signalization (URS 2011). The Proposed Action would incrementally add to these issues for the duration of construction, drilling, and completion. These impacts would be short term for the period of approximately 5 years.

4.12.2 Cumulative Effects of Alternative B (Proposed Action) on Traffic and Transportation

The cumulative effects analysis area is San Juan County, New Mexico, and La Plata County, Colorado.

The average daily oil and gas well site visits estimated in the PRMP/FEIS associated with 9,942 new federal wells is about 20,500 vehicle trips per day (USDI/BLM 2003*a*, page 4-34). The ROD for the PRMP/FEIS notes that there “may be considerable” impacts to transportation infrastructure and traffic conditions associated with these vehicle trips on U.S. Highway 550, U.S. Highway 64, and U.S. Highway 173, depending on the timing and pattern of oil and gas development within the FFO planning area (USDI/BLM 2003*a*, page 4-127).

No cumulative effects to traffic and transportation are anticipated, as after about 5 years traffic levels would be expected to return to current levels for operations and maintenance.

4.12.3 Direct and Indirect Effects of Alternative C on Traffic and Transportation

WPX Energy currently drills nine wells or fewer per year in the Middle Mesa portion of the Rosa Unit. WPX Energy would continue to drill up to nine vertical/directional wells per year. Currently, an average of 10 to 12 vehicle trips per day occur during the winter closure period for operations and maintenance on completed wells. For the remainder of the year when drilling is occurring, there is an average of 30 vehicle trips per day (USDI/BLM 2011*a*). Traffic levels are not expected to increase above the current baseline. There would be no direct or indirect effects to traffic and transportation from baseline traffic levels.

4.12.4 Cumulative Effects of Alternative C on Traffic and Transportation

No cumulative effects beyond those already analyzed in the PRMP/FEIS on traffic and transportation would occur under Alternative C.

4.13 Visual Resources

The Middle Mesa portion of the Rosa Unit is located within a Class II VRM area. The 2009 VRI classified the area as displaying Class IV VRM values based on landscape changes over the last 30 years. There are no designated scenic areas within the project area. However, Navajo Reservoir would be considered a sensitive receptor.

4.13.1 Direct and Indirect Effects of Alternative B (Proposed Action) on Visual Resources

During construction and drilling operations, the effects of disturbed ground, machinery emissions, above-ground storage tanks, and the presence of the drill rig and construction equipment would result in short-term visual impacts readily visible from access roads. These impacts would be localized around the drilling rig but may be seen from vantages on Navajo Reservoir. Since the well pads would be twinned with existing locations that support above-ground structures and equipment, the level of change following reclamation would be weak to nonexistent in form, line, texture, and color.

Neither the water line nor the two fluids management pits are visible from Navajo Reservoir. The proposed water line would result in short-term impacts during construction and until the area has been reclaimed. Additionally, the fluids management pits would result in short-term impacts for the duration of drilling and completion (about 5 years). Long-term effects would be related to existing landform, vegetation, and structure changes resulting in a weak to moderate degree of contrast in form, line, texture, and color.

4.13.2 Cumulative Effect of Alternative B (Proposed Action) on Visual Resources

The cumulative impact assessment area for visual resources is the Navajo Reservoir watershed.

Existing disturbances have contributed to the current VRM ratings and the VRI classification for the project area. Cumulative impacts have resulted from oil and gas, and electric transmission development on federal and private lands, vegetation management, and residential development on private lands.

The Proposed Action would cumulatively affect visual resources in the area from the construction of two cross-country segments of water line (2.65 acres), the road re-route (0.8 acre), and the two fluids management pits (12.4 acres). These actions would result in changes in the form, line, texture, and color of the visual landscape. These impacts would affect approximately 19 acres within the viewshed.

4.13.3 Direct and Indirect Effects of Alternative C on Visual Resources

During construction and drilling operations, the effects of disturbed ground, machinery emissions, aboveground storage tanks, and the presence of the drill rig and construction equipment would result in short-term visual impacts readily visible from access roads. These locations may also be visible from private residences and Navajo Reservoir. Since all locations would be twinned, after interim reclamation is completed, conditions would be the same as pre-project conditions resulting in no long-term visual impacts.

4.13.4 Cumulative Effects of Alternative C on Visual Resources

No cumulative effects on visual resources would occur under Alternative C because existing locations would be used.

5. CONSULTATION AND COORDINATION

The environmental document was prepared by Ecosphere Environmental Services in conformance with the standards of, and under the direction of, the BLM/FFO. This section includes individuals or organizations from the public, public land users, and the interdisciplinary team that were contacted during the development of this document.

The following public and private entities contributed to this document:

Lindsey Eoff, Project Manager, Bureau of Land Management Farmington Field Office
Amanda Nisula, Planning and Environmental Coordinator, Bureau of Land Management Farmington Field Office
Maureen Joe, Assistant Field Manager – Lands and Renewable Resources, Bureau of Land Management Farmington Field Office
Gary Torres, Field Manager, Bureau of Land Management Farmington Field Office
Barney Wegener, Natural Resource Specialist, Bureau of Land Management Farmington Field Office
Jim Copeland, Archaeologist, Bureau of Land Management Farmington Field Office
John Hansen, Wildlife Biologist, Bureau of Land Management Farmington Field Office
Dale Wirth, Branch Chief Range and Multiple Resources, Bureau of Land Management Farmington Field Office
Dave Mankiewicz, Assistant Field Manager – Minerals, Bureau of Land Management Farmington Field Office
Scott Hall, Lands Team Lead, Bureau of Land Management Farmington Field Office
Roger Herrera, Environmental Protection Specialist, Bureau of Land Management Farmington Field Office
Jim Lovato, Petroleum Engineer Sr. Advisor, Bureau of Land Management Farmington Field Office

Rob Waldman, U.S. Bureau of Reclamation Durango Regulatory Office
Mike Dombrowski, U.S. Bureau of Reclamation Durango Regulatory Office
Kathleen Ozga, U.S. Bureau of Reclamation Durango Regulatory Office
Allen Shroeder, U.S. Bureau of Reclamation Durango Regulatory Office
Ryon Christianson, U.S. Bureau of Reclamation Durango Regulatory Office
Mark Chiarito, U.S. Bureau of Reclamation Durango Regulatory Office
Tyler Artichoke, U.S. Bureau of Reclamation Durango Regulatory Office
Phillip Reiger, U.S. Bureau of Reclamation Durango Regulatory Office
Gary Vance, U.S. Bureau of Reclamation Durango Regulatory Office

Heather Riley, Senior Regulatory Specialist, WPX Energy Production, LLC.
Larry Higgins, Supervisor Permits, WPX Energy Production, LLC.
Ben Mitchell, Regulatory Specialist, WPX Energy Production, LLC.
Ken McQueen, Director, San Juan Region, WPX Energy Production, LLC.
Stergie Katirgis, WPX Energy Production LLC.
Myke Lane, WPX Energy Production LLC
Susan Avillar, WPX Energy Production LLC
Mark Lepich, WPX Energy, Production LLC

Steve Nelson, Nelson Consulting, Inc.
Cindy Lawrence, Nelson Consulting, Inc.

John D. Hair, P.E., Consulting Engineer

List of Preparers

Lindsey Eoff, Project Manager, Bureau of Land Management Farmington Field Office
Amanda Nisula, Planning and Environmental Coordinator, Bureau of Land Management Farmington Field Office
Barney Wegener, Bureau of Land Management Farmington Field Office
Joey Herring, Project Manager/Sr. Biologist, Ecosphere Environmental Services
Carolyn Dunmire, Ecosphere Environmental Services
Michael Fitzgerald, Ecosphere Environmental Services
Theresa Ancell, Biologist, Ecosphere Environmental Services
Elizabeth Burak, Biologist, Ecosphere Environmental Services

6. BIBLIOGRAPHY

Barlow, J.C., S.N. Leckie, and C.T. Baril. 1999. Gray Vireo (*Vireo vicinior*), The Birds of North America Online (A. Poole, Ed.). Ithaca: Cornell Lab of Ornithology; Retrieved from the Birds of North America Online: http://bna.birds.cornell.edu/bna/species/447.

Cantebury, M. 2012. La Plata County traffic data. Personal communication with Mike Cantebury, La Plata County District 3 Road Manager. 23 October 2012.

Colorado Department of Transportation (CDOT). 2011. Statistics, Maps and Data. http://apps.coloradodot.info/dataaccess/ (Accessed on June 28, 2011).

CDOT. 2012. Level of Service (LOS) Definitions. SH 7 PEL Planning Environmental Linkage Study. Colorado Department of Transportation.

Davis, M. 2012. La Plata County traffic data. Personal communication with Mike Davis, La Plata County Director of Public Works. 26 October 2012.

DiGiulio, D., R.T. Wilkin, C. Miller, and G. Oberly. 2011. Draft: Investigation of Ground Water Contamination Near Pavillion, Wyoming. Prepared for the U.S. Environmental Protection Agency Office of Research and Development National Risk Management Research Laboratory. Ada, Oklahoma.

Economic Planning Systems, Inc. (EPS). 2011. Final Report. San Juan County Economic Base Analysis. Prepared for the E>P Committee. January 21. 2011. Available at: http://www.sanjuaneds.com/pdfs/EPS-SJC-report-%20for-website.pdf.

Engler, Dr. T.W., Dr. B.S. Brister, Dr. H. Chen, Dr. L.S. Teufel. 2001. Oil and Gas Resource Development for San Juan Basin, New Mexico. New Mexico Institute of Mining and Technology. Socorro, New Mexico.

Headwaters Economics. 2011. Fossil Fuel Extraction and Western Economics. April 2011. Available at: http://headwaterseconomics.org/energy/western/maximizing-benefits.

Independent Petroleum Association of New Mexico (IPANM). 2011. Energy New Mexico. Available at: http://www.ipanm.org/images/library/File/Energy_New_Mexico_2011.pdf.

Jones, William. V. 2012. New Mexico Oil Conservation Division. Using produced water for drilling and completion operations. Personal communication with Charles Harraden, Bureau of Land Management Farmington Field Office. May 30, 2012.

Lillywhite, Jay and C. Meghan Starbuck. 2008. The Economic Impact of New Mexico's Oil and Gas Industry. August 5, 2008.

Mankiewicz, Dave. 2012. Bureau of Land Management Farmington Field Office. Number of wells drilled to the Mancos Formation since 2003 and reasonably foreseeable development. Personal communication with Lindsey Eoff.

Martin, J.W. and B.A. Carlson. 1998. Sage Sparrow (Amphispiza belli), The Birds of North America Online (A. Poole, Ed.). Ithaca: Cornell Lab of Ornithology; Retrieved from the Birds of North America Online: http://bna.birds.cornell.edu/bna/species/326

Manley, K., G.R. Scott, and R.A. Wobus. 1987. Geological map of the Aztec 1º x 2º Quadrangle, northwestern New Mexico and southern Colorado. 1:250,000.

Natural Resources Conservation Service (NRCS) 2008. Soil Survey of Rio Arriba County, New Mexico: Parts of Rio Arriba and Sandoval Counties. U.S. Department of Agriculture, Natural Resources Conservation Service.

NRCS. 1980. Soil survey of San Juan County, New Mexico. U.S. Department of Agriculture, Natural Resources Conservation Service.

New Mexico Environment Department (NMED). 2010. Inventory of New Mexico Greenhouse Gas Emissions: 2000-2007. http://www.nmenv.state.nm.us/cc/index.html.

NMED. 2012. Northwest New Mexico Monitoring Network Presentation to BLM. June 26, 2012. Presented by Mark Jones New Mexico Environment Department.

New Mexico Partners in Flight (NMPIF). 2007. New Mexico Bird Conservation Plan. Version 2.1. C. Rustay and S. Norris, compilers. Albuquerque, New Mexico.

Starbuck, C. Meghan. 2009. The Economic Impact of New Mexico's Oil and Gas Industry. December 31, 2009. Available at: http://www.energyadvancesnewmexico.com/ files/NMOG_YR2009_V_01_27_2010.pdf.

URS Corporation (URS). 2011. Ignacio Area Corridor Access Plan: A Community in Motion. Prepared for the Southern Ute Indian Tribe, Colorado Department of Transportation, La Plata County, and the Town of Ignacio.

U.S. Bureau of Reclamation (USBR). 2012. Bureau of Reclamation - Water Operations Data Elevation, Content, Inflow & Release for last 40 Days. Available at www.usbr.gov/uc/water/rsvrs/ ops/crsp_40_nr.html. (Accessed September 5, 2012.)

U.S. Bureau of Labor Statistics (USBLS) 2011. Labor Force Data by County, 2011 Annual Averages (Used in Table 3-7 for unemployment rate). Accessed April 20, 2012.

U.S. Census Bureau. 2010. Census Statistics 2010. Available at: http://quickfacts.census.gov/qfd/ states/35000.html.

U.S. Department of Agriculture (USDA). 2011. Memorandum of understanding among the U.S. Department of Agriculture, U.S. Department of the Interior, and U.S. Environmental Protection Agency, regarding air quality analyses and mitigation for federal oil and gas decisions through the National Environmental Policy Act process. Available at: http://www.epa.gov/ compliance/resources/policies/nepa/air-quality-analyses-mou-2011.pdf

U.S. Department of Energy (USDOE). 2010. Energy Information Administration. Annual Energy Outlook. Available at: http://www.eia.gov/oiaf/archive/aeo10/index.html.

U.S. Department of the Interior (USDI). 2004. Department Manual Part 516 National Environmental Policy Act of 1969 Procedures: Environmental Quality. Washington, DC.

U.S. Department of the Interior, Bureau of Land Management (USDI/BLM). 2002. Biological assessment: Impacts to threatened and endangered species related to the resource management plan. U.S. Department of the Interior, Bureau of Land Management, Farmington Field Office, Farmington, New Mexico.

USDI/BLM. 2003a. Farmington proposed resource management plan and final environmental impact statement. U.S. Department of the Interior, Bureau of Land Management, Farmington Field Office, Farmington, New Mexico.

USDI/BLM. 2003b. Farmington resource management plan record of decision. U.S. Department of the Interior, Bureau of Land Management, Farmington Field Office, Farmington, New Mexico.

USDI/BLM. 2005. BLM Manual Supplement H-8100-1. Procedures for Performing Cultural Resources Fieldwork on Public Lands in the Area of New Mexico BLM Responsibilities. New Mexico, Oklahoma, and Texas.

USDI/BLM. 2008a. Environmental Assessment of the Criteria and Impacts of Granting Exceptions to the Seasonal Closure Periods in Designated Wildlife Areas. Bureau of Land Management, Farmington Field Office. Farmington, New Mexico.

USDI/BLM. 2008b. NEPA Handbook H 1790 1 [BLM 1/30/2008]. Washington, D.C.

USDI/BLM. 2011*a*. Environmental Assessment and Decision Record for the Williams Four Corners, LLC Middle Mesa Plan of Development. Farmington Field Office Area. Bureau of Land Management, Farmington Field Office, Farmington, New Mexico.

USDI/BLM. 2011b. Air Resources Technical Report for Oil and Gas Development. New Mexico, Oklahoma, Texas, and Kansas. Bureau of Land Management, New Mexico State office. Santa Fe, New Mexico.

USDI/BLM. 2012 . Historic and Recently Active Raptor Nests in the Farmington Field Office Area. Bureau of Land Management, Farmington Field Office, Farmington, New Mexico. Unpublished data.

U.S. Environmental Protection Agency (USEPA). 2004. Evaluation of Impacts to Underground Sources of Drinking Water by Hydraulic Fracturing of Coalbed Methane Reserves. Office of Ground Water and Drinking Water (4606M). EPA 816-R-04-003.

USEPA. 2008. National Emissions Inventory. http://www.epa.gov/ttn/chief/net/2008inventory.html

USEPA. 2011. 2005 National-Scale Air Toxics Assessment. Summary of Results. http://www.epa.gov/ttn/atw/nata2005.

U.S. Geological Survey (USGS). 1995. Ground Water Atlas of the United States, Arizona, Colorado, New Mexico, Utah. HA 730-C. Section Colorado Plateaus Aquifers.

WildEarth Guardians and San Juan Citizens Alliance. 2012. Statement of Reasons for Notice of Appeal of the Decision Record and Finding of No Significant Impact for the Williams Middle Mesa Plan of Development San Juan County, New Mexico. EA No. DOI-BLM-NM-F010-2011-254-EA. IBLA-2012-0076.

7. GLOSSARY

Acre-foot – Volume of water required to cover 1 acre to a depth of 1 foot: equivalent to a volume of 43,560 cubic feet, approximately 325,829 gallon, or approximately 7,758 barrels.

Abandonment – Termination of fluid minerals operations, production operations, removal of facilities, plugging of the well bore, and reclamation of surface disturbances.

Affected Environment – Surface or subsurface resources (including social and economic elements) within or adjacent to a geographic area that potentially could be affected by gas development and production activities. The environment of the area to be affected or created by the alternatives under consideration (40 CFR 1502.15).

Alternative – A combination of management prescriptions applied in specific amounts and locations to achieve a desired management emphasis as expressed in goals and objectives. One of a number of plans or projects proposed for decision-making.

Ambient (air) – The surrounding atmospheric conditions to which the general public has access.

Blowout preventer – A large valve at the top of a well that may be closed if the drilling crew loses control of formation fluids.

Casing – Steel pipes of varying diameter and weight, joined together by threads and couplings, "inserted" into the well bole for the purpose of supporting the walls of the well and preventing them from caving in. Surface casing is inserted from the ground surface to approximately 250 feet, production casing is inserted to the total depth of the well (smaller diameter pipe than surface casing), cemented in place, and latter perforated for production.

Christmas tree – An assemblage of valves, located at the top of the casings, from which tubing in the well is suspended.

Closed-loop system – a typical closed-loop system includes a series of linear-motion shakers, mud cleaners, and centrifuges followed by a dewatering system. The combination of equipment typically results in a "dry" location where a reserve pit is not required for cuttings and drilling mud.

Co-location – a well pad that is adjacent to or slightly overlaps an existing well pad**.**

Coalbed Methane – A gas associated with a coal seam.

Completion – The activities and methods to prepare a well for production. Includes installation of equipment for production from an oil or gas well.

Conditions of Approval (COA) – Conditions or provisions (requirements) under which an Application for a Permit to Drill or a Sundry Notice is approved.

Corridor – For purposes of this environmental assessment, a wide strip of land within which a proposed linear facility could be located.

Coupon – a small 2-inch by 1-inch sample of the same material as a pipeline. These are placed into the line through a special port and remain inside the line for a predetermined amount of time (6 months or so). Then the coupon is pulled and replaced with another. The original is then sent to a lab to be analyzed for corrosion.

Cultural Resources – Remains of human activity, occupation, or endeavor, as reflected in districts, sites, buildings, objects, artifacts, ruins, works of art, architecture, and natural features important in human events.

Cuttings – Fragments of rock dislodged by the drill bit and brought to the surface in the drilling mud.

dBA – A-weighting. The most commonly used frequency weighting measures designed to simulate human sound perception and correlate well with human perception of the annoying aspects of noise.

Directional Drilling – The intentional deviation of a wellbore from vertical to reach subsurface areas off to one side from the drilling site.

Direct Impacts – Impacts that are caused by the action and occur at the same time and place.

Disposal well – A well into which produced water or other fluids from other wells is injected into an underground formation for disposal.

Drilling Rig – The derrick, draw-works, and attendant surface equipment of a drilling or workover unit.

Drilling – The operation of boring a hole in the earth, usually for the purpose of finding and removing subsurface formation fluids such as oil and gas.

Emission – Effluent discharge into the atmosphere, usually specified by mass per unit time.

Endangered Species – Any animal or plant species in danger of extinction throughout all or a significant portion of its range.

Environmental Impact Statement (EIS) – A document prepared to analyze the impacts on the environment of a proposed action and released to the public for review and comment. An EIS must meet the requirements of NEPA, CEQ, and the directives of the agency responsible for the proposed action.

Ephemeral stream – A stream that flows only in direct response to precipitation.

Erosion – The group of processes whereby earthy or rocky material is worn away by natural sources such as wind, water, or ice and removed from any part of the earth's surface.

Flare – An arrangement of piping and a burner to dispose of surplus combustible vapors, usually situated around a gasoline plant, refinery, or producing well.

Flowback – The process of allowing fluids to flow from the well following a treatment, either in preparation for a subsequent phase of treatment or in preparation for returning the well to production.

Formation – A body of rock identified by lithic characteristics and stratigraphic position; it is prevailingly but not necessarily tabular, and is mappable at the earth's surface or traceable in the subsurface.

Fugitive dust – Dust particles suspended randomly in the air from road travel, excavation, and/or other operations.

Gas buster - A simple separator vessel used to remove free or entrained gas from fluids circulated in the wellbore, such as mud used during drilling operations. The gas buster typically comprises a vessel containing a series of baffles with a liquid exit on the bottom and a gas-vent line at the top of the vessel.

Green completion – during the flowback stage of the completion, natural gas produced with the water is separated from the water and placed in a pipeline instead of being released to the atmosphere.

Habitat – A specific set of physical conditions that surround a single species, a group of species, or a large community. In wildlife management, the major components of habitat are considered to be food, water, cover, and living space.

Habitat Fragmentation – The disruption (by division) of extensive habitats into smaller habitat patches. The effects of habitat fragmentation include loss of habitat area and the creation of smaller, more isolated patches of remaining habitat.

Habitat Type – An aggregation of all land areas potentially capable of producing similar plant communities at climax.

Historic – Archaeological and archivally known sites related to the activities of non-native peoples, whether they are of Euro-American, Afro-American or Asian-American origin, in the period after the European discovery of the New World (ca. A.D. 1492).

Horizontal drilling – A subset of the more general term "directional drilling," used where the departure of the wellbore from vertical exceeds about 80 degrees. Because a horizontal well typically penetrates a greater length of the reservoir, it can offer significant production improvement over a vertical well.

Hydraulic Fracturing – A method of stimulating production by increasing the permeability of the producing formation.

Hydrocarbons – Organic compounds of hydrogen and carbon, whose densities, boiling points, and freezing points increase as their molecular weights increase. Although composed mostly of carbon and hydrogen, hydrocarbons exist in a great variety of compounds, owing to the strong affinity of the carbon atom for other atoms and itself. The smallest molecules are gaseous; the largest are solids. Petroleum is a mixture of many different hydrocarbons.

Impact – A modification of the existing environment caused by an action (such as construction or operation of facilities).

Indirect Impacts – Secondary effects that occur in locations other that the initial action or later in time.

Infrastructure – The facilities, services, and equipment needed for a community to function including roads, sewers, water lines, police and fire protection, and schools.

Injection – The forcing, under abnormal pressure, of material (downward from above, upward from below, or laterally) into a pre-existing deposit or rock, either along some plane or weakness or into a pre-existing crack or fissure.

Injection Well – A well used to inject fluids into an underground formation to increase reservoir pressure.

Landscape – An area composed of interacting ecosystems that are repeated because of geology, landform, soils, climate, biota, and human influences throughout the area. Landscapes are generally of a size, shape, and pattern that are determined by interacting ecosystems.

Lease – (1) A legal document that conveys to an operator the right to drill for oil and gas; (2) the tract of land on which a lease has been obtained where producing wells and production equipment are located.

Lease Stipulation – A modification of the terms and conditions on a standard lease form at the time of the lease sale.

Mineral Estate (Mineral Rights) – The ownership of minerals, including rights necessary for access, exploration, development, mining, ore dressing, and transportation operations.

Mineral Reserves – Known mineral deposits that are recoverable under present conditions but are as yet undeveloped.

Mineral Rights – Mineral rights outstanding are third-party rights, an interest in minerals not owned by the person or party conveying the land to the United States. It is an exception in a deed that is the result of prior conveyance separating title of certain minerals from the surface estate. Reserved mineral rights are the retention of ownership of all or part of the mineral rights by a person or party conveying land to the United States. Conditions for the exercising of these rights have been defined in the Secretary of the Interior's "Rules and Regulations to Govern Exercising of Mineral Rights Reserved Conveyance to the United States" attached to and made a part of deeds reserving mineral rights.

Mitigation – The abatement or reduction of an impact on the environment by (1) avoiding a certain action or parts of an action, (2) employing certain construction measures to limit the degree of impact, (3) restoring an area to preconstruction conditions, (4) preserving or maintaining an area throughout the life of a project, (5) replacing or providing substitute resources to the environment, or (6) gathering archaeological and paleontological data before disturbance.

Modification – A fundamental change in the provisions of a lease stipulation, either temporarily or for the term of the lease. A modification may, therefore, include an exemption from or alteration to a stipulated requirement. Depending on the specific modification, the stipulation may or may not apply to all other sites within the leasehold to which restrictive stipulation applies.

National Ambient Air Quality Standards (NAAQS) – The allowable concentrations of air pollutants in the air specified by the federal government. The air quality standards are divided into primary standards (based on the air quality criteria and allowing an adequate margin of safety and requisite to protect the

public health) and secondary standards (based on the air quality criteria and allowing an adequate margin of safety and requisite to protect the public welfare) from any unknown or expected adverse effects of air pollutants.

National Environmental Policy Act of 1969 (NEPA) – An Act that encourages productive and enjoyable harmony between man and his environment and promotes efforts to prevent or eliminate damage to the environment and biosphere and stimulate the health and welfare of man; enriches the understanding or the ecological systems and natural resources important to the Nation, and establishes the Council on Environmental Quality.

Noxious Weed – An undesirable weed species that can crowd out more desirable species.

Produced water – Groundwater pumped to the surface during reservoir production.

Proposed Action – Construction activities, alignments, and other activities proposed by the applicant.

Raptor – Bird of prey with sharp talons and strongly curved beak; e.g., hawk, owl, vulture, eagle.

Reasonably Foreseeable Development Scenario (RFDS) – The prediction of the type and amount of oil and/or gas that would occur in a given area.

Reclamation – The process of converting disturbed land to its former use or other productive uses.

Record of Decision – A document separate from, but associated with, an environmental impact statement that publicly and officially discloses the responsible official's decision on the proposed action.

Reserve Pit - (1) Usually an excavated pit that may be lined with plastic that holds drill cuttings and waste mud. (2) Term for the pit that holds the drilling mud.

Reservoir (oil and gas) **–** A naturally occurring, underground container of oil and gas, usually formed by deformation of strata and changes in porosity.

Riparian – Situated on or pertaining to the bank of a river, stream, or other body of water. Normally used to refer to the plants of all types that grow along, around, or in wet areas.

San Juan Basin – A large geologic basin located in northwestern New Mexico and southwestern Colorado that has been extensively drilled for oil and gas and is reportedly the second largest gas producing basin in the continental United States.

Scoping – A term used to identify the process for determining the scope of issues related to a proposed action and for identifying significant issues to be addressed in an EIS.

Seasonal timing limitation – A restriction on activities for a specific annual period.

Significant – An effect that is analyzed in the context of the proposed action to determine the degree or magnitude of importance of the effect, either beneficial or adverse. The degree of significance can be related to other actions with individually insignificant but cumulatively significant impacts.

Slope – The degree of deviation of a surface from the horizontal.

Spacing – means the area allocated to a well under a well spacing order or rule.

Threatened or Endangered Species – Animal or plant species that are listed under the federal Endangered Species Act of 1973, as amended (federally listed), or under the Colorado or New Mexico Endangered Species Act (state listed).

Twinned location – Two or more well heads located on a single well pad.

Visual Resources – The visible physical features of a landscape (topography, water, vegetation, animals, structures, and other features) that constitute the scenery of an area.

Waiver – Permanent exemption from a lease stipulation. The stipulation no longer applies anywhere within the leasehold.

Wellbore – The hole made by the drilling bit.

Wetland – Areas that are inundated or saturated by surface or groundwater at a frequency and duration sufficient to support, and that under normal circumstances do support, a prevalence of vegetation typically adapted for life in saturated soil conditions.

Zone – A slab of reservoir rock bounded above and below by impermeable rock.

APPENDIX A
AUTHORIZING ACTIONS

This Environmental Assessment is prepared under the authority of the National Environmental Policy Act of 1969 (NEPA) (42 USC 4321-4347) and Federal regulations found in the Council on Environmental Quality Regulations (40 CFR 1500-1508).

Multiple use, as mandated by the Federal Land Policy and Management Act of 1976, requires that public lands be managed so that the use of some lands are for "a combination of balanced and diverse resource uses that takes into account the long-term needs of future generations for renewable and nonrenewable resources, including, but not limited to, recreation, range, timber, minerals, watershed, wildlife and fish…" (43 USC 35).

Federal law mandates protection of some surface resources that are potentially affected by the development of the proposed action alternative. Cultural resources threatened by development are protected by the Antiquities Act of 1906 (PL 52-209), the National Historic Preservation Act of 1966 (PL 89-665 and PL 52-209) and its regulations (36 CFR 800), and other legislation including NEPA (PL 91-852) and its regulations (40 CFR 1500-1508), the 1971 Executive Order No. 11593, the Archaeological and Historical Conservation Act of 1974 (PL 93-291), the Archaeological Resources Protection Act of 1979 (PL 96-95) and its regulations (36 CFR 296), the American Indian Religious Freedom Act (48 USC 1996), and the Native American Graves Protection and Repatriation Act of 1990. Compliance with Section 106 responsibilities of the National Historic Preservation Act are adhered to by following the BLM–New Mexico State Historic Preservation Office protocol agreement, which is authorized by the National Programmatic Agreement between the Bureau of Land Management (BLM), the Advisory Council on Historic Preservation, and the National Conference of State Historic Preservation Officers, and other applicable BLM handbooks.

Under Section 402 of the Clean Water Act, as amended (33 USC § 1251 et seq.), the U.S. Environmental Protection Agency was directed to develop a phased approach to regulate storm water under the National Pollutant Discharge Elimination System (NPDES) program. Industrial activities disturbing land may require permit coverage through a NPDES storm water discharge. Depending on the acreage disturbed, either a Phase I industrial activity (five or more acres disturbance) or a Phase II small construction activities (between 1 and 5 acres disturbance) permit may be required. For oil and gas NPDES permitting requirements, review 40 CFR 122.26(c)(1)(iii). Additionally, a U.S. Army Corps of Engineers Section 404 Permit for the discharge or dredge and fill materials may also be required. Operators are required to obtain all necessary permits and approvals prior to any disturbance activities.

Surface water resources are protected from oil pollution sources by the Federal Water Pollution Control Act (40 CFR 112). The Comprehensive Environmental Response, Compensation, and Liability Act of 1980 and other Federal regulations are designed to control the releases of hazardous materials into the environment and to direct the handling of response to accidental spills.

The New Mexico Energy, Minerals, and Natural Resources Department requires oil and gas operators to follow "pit rule" guidelines contained with the New Mexico Administrative Code 19.15.17 to reduce the potential for groundwater contamination from industry-related activities.

Threatened and endangered flora and fauna species are protected under the Endangered Species Act of 1973, as amended (PL 94-325). Additionally, the Migratory Bird Treaty Act (16 USC 703-712) and the

Eagle Protection Act (16 USC 668-668d) protect other wildlife species potentially occurring in the proposed project area.

Executive Order 11312 of 1999, "Invasive Species," establishes measures to prevent the introduction of invasive species and provide for their control and to minimize the economic, ecological, and human health impacts that invasive species cause. The Executive Order provides guidelines to Federal Agencies to contend with invasive species, to create an Invasive Species Council, and to implement an Invasive Species Management Plan.

The Federal Plant Protection Act of June 2000, the Federal Noxious Weed Act of 1974 (Section 2814), and the New Mexico Statutes Annotated (NMSA) 1978, "Noxious Weed Control Act," provide for the control and management of non-indigenous weeds that injure or have the potential to injure the interests of agriculture and commerce, wildlife resources, or the public health.

Air quality standards in New Mexico are under the jurisdiction of the New Mexico Environment Department/Air Quality Bureau (NMED/AQB). The Environmental Improvement Act, NMSA 1978, and the Air Quality Control Act, NMSA 1978, dictate state air quality standards. Also, 40 CFR 60, "Standards of Performance for New Stationary Sources," is administered by the NMED/AQB.

Executive Order 12898 of 1994, "Federal Actions to Address Environmental Justice in Minority Populations and Low-Income Populations," requires implementing procedures to insure that proposed projects within the auspices of Federal agencies do not result in disproportionate shares of negative environmental impacts affecting any group of people due to a lack of political or economic strength. Environmental justice requires "...the fair treatment of people of all races, cultures, incomes, and educational levels with respect to the development, implementation, and enforcement of environmental laws, regulations, and policies." As such, this document includes an assessment of the impacts of the project on minority and low-income populations.

The New Mexico Energy, Minerals, and Natural Resources Department requires oil and gas operators to follow "pit rule" guidelines contained with New Mexico Administrative Code 19.15.17 to reduce the potential for groundwater contamination from industry-related activities.

Additionally, WPX Energy San Juan, LLC would comply with all applicable Federal, State, and local laws and regulations; obtain the necessary permits for drilling, construction, and operation; and certify that Surface Use Agreements have been reached with the private landowners, where required.

APPENDIX B
COMMENT RESPONSE

Commenter	Page/ Paragraph	Category	Comment	Action	Response
WildEarth Guardians		General	Request that if the BLM moves to issue the proposed APDs, that the agency review and respond to our prior comments on the Middle Mesa POD.	Beyond Scope of EA	Comments on the Middle Mesa Plan of Development (POD) were addressed in the Final Middle Mesa POD Environmental Assessment (EA).
WildEarth Guardians		Air Quality	There is no estimate of indirect emissions, particularly NO2, VOC, and PM2.5, associated with activities like compressor station operations, frack pond construction and operation, pipeline pigging operations, land farming operation, and other waste disposal activities, power generation activities, including cogeneration facilities.	Already in Document	Emissions associated with the action are included in the baseline. Emissions from multi-well fluids management and waste disposal facilities were included in the emissions calculator. No compressor stations or power generation are proposed or anticipated to be proposed.
WildEarth Guardians		Air Quality	Complete a more robust analysis of air quality impacts and provide a reasonable basis for assessing the significance of impacts or prepare an EIS.	Already in Document	Air quality impacts are adequately analyzed in the EA. The action is consistent with the scale of development analyzed in the Resource Management Plan (RMP) Final Environmental Impact Statement (FEIS). The Farmington planning area is currently in attainment with all National and State Ambient Air Quality Standards (NAAQS/SAAS).
WildEarth Guardians		Water Quality	Request the BLM commit to ensuring baseline and post-drilling groundwater quality monitoring and adopt a Condition of Approval (COA) that prohibits and all groundwater contamination.	Beyond Scope of EA	The Bureau of Land Management (BLM) does not write Conditions of Approval (COA) for actions that are already regulated by other federal and state agencies.
WildEarth Guardians		Water Quality	Request that BLM adopt a COA that ensures no freshwater is used for the duration of proposed drilling.	Beyond Scope of EA	The BLM has a COA in place for water use in drilling. "Water acquired to construct, produce, and maintain actions authorized by this permit to drill must be acquired from permitted water sources, or water authorized for use by the New Mexico Oil Conservation Division (OCD). Upon request, the AO (authorized officer) shall be provided with documentation of water sources."
WildEarth Guardians		T&E Species	Request that BLM prepare a thorough biological assessment for the proposed APDs and formally consult with the USFWS over potential contamination, flow depletions or other impacts to Colorado pikeminnow and razorback sucker. BLM must address indirect effects. It does not appear that BLM assessed the potential for impacts to these species within the actual "action area".	Already in Document	In 1994, U.S. Fish and Wildlife Service (USFWS) designated critical habitat for the Colorado pikeminnow and the razorback sucker, located on the San Juan River in West Farmington and extending downstream to Lake Powell. The proposed project area is approximately 60 river miles from the start of the designated critical habitat for the pikeminnow and razorback sucker in Farmington. Even if there were some discharge of contaminants from the proposed project, the distance to the critical habitat and Navajo Dam (~ 14 river miles from proposed project area) would likely prevent any impacts to the pikeminnow or razorback sucker or their designated habitat. There are no new water depletions associated with this project. Water associated with this project will be produced water in

Commenter	Page/ Paragraph	Category	Comment	Action	Response
					accordance to NMOCD (NMAC 19.15.2.52). Any new water depletion would require Section 7 consultation (formal) with USFWS under the Endangered Species Act. The proposed project is in conformance with the 2002 Biological Assessment for the BLM/FFO RMP with an effects determination of "may affect, not likely to adversely affect" on federally-listed species in the BLM/FFO resource area, including the two fish species. No further consultation with USFWS is necessary.
WildEarth Guardians		Tiering to the RMP	Cumulative Field-Office-wide impacts of Mancos shale gas development has not been appropriately analyzed. BLM cannot reasonably tier to the RMP and the RFDS. Request BLM supplement its EIS for the RMP to ensure cumulative impacts of horizontal drilling to develop Mancos shale have been taken into account.	Beyond Scope of EA	The BLM Land Use Plans (e.g., resource management plans) are designed to provide guidance for future management actions and the development of subsequent, more detailed and limited-scope plans for resources and uses (BLM Handbook H-1790-1). The proposed development is within the scope and scale of the Farmington planning area RMP FEIS. The context and intensity of producing the Mancos Shale was included in the RFDS for the RMP FEIS. The formation was evaluated as a stand-alone formation, and Mancos Shale gas wells were combined with those of the Dakota Formation as a potential commingle candidate. The total number of Dakota-Mancos Gas wells predicted to be drilled on Federal lands was 4,108. The RFDS also predicted 300 oil wells drilled to the Mancos Shale and Gallup reservoirs over 20 years. The RFDS noted that there was excellent potential for the Mancos Shale to be further developed as a shale gas candidate.
La Plata County	41; Section 3.11; Table 3-7	Transportation	Including a column in the table to show the potential increase in traffic from the proposed alternatives would be helpful for the proposed five-year estimated duration of increased traffic.	Edit EA	Table 3-7 illustrates the existing baseline. Impacts from the proposed action alternatives are presented in Chapter 4. Additional text has been incorporated into this section.
La Plata County	41; Section 3.11; Table 3-7	Transportation	This table does not include any information of County Roads. What is the current ADT for an existing 22-foot wide gravel County Road.	Edit EA	The EA has been edited to include Table 3-8, which lists average daily traffic counts for County Roads 328 and 330.
La Plata County	41; Section 3.11	Transportation	The Ignacio Corridor Access Plan (ICAP) recommended the installation of a traffic signal. The study does not mention that it is currently operating at LOS F for the PM left turns, south bound on SH 172. Funding is not currently available and construction has not been scheduled.	Edit EA	Comment noted. The EA has been edited to include the LOS F for SH 172.
La Plata County	80; Section 4.12.1	Transportation	What would the vehicle trips per day be for the estimated use of the well pad for routine maintenance, etc. on County Roads after the	Edit EA	Additional text has been added to this section.

Commenter	Page/ Paragraph	Category	Comment	Action	Response
			estimated five years for the proposed action? IE. What will the generated ADT's be during and after construction?		
La Plata County	80; Section 4.12.1	Transportation	County roads are not included or discussed for increased vehicle trips wear and tear on roads at all. What is the current ADT for County Roads 328 and 330 and what would the proposed increase be? How will the impacts to gravel roads from the increased traffic and from oil and gas trucks using tire chains on county roads be mitigated?	Edit EA	Additional text has been added to this section.
La Plata County	81; Section 4.12.1	Transportation	The statement that the proposed action would not result in changes to the level of service for any roadways used is not backed up with any information. The existing level of service on county roads has not been identified and this statement is not taking into account additional proposed truck traffic on county roads. The estimated five years for the proposed action does not take into account the increase in traffic on county roads as 5 years of increased truck traffic has the potential to significantly damage county roads. What about the current county road-State Highway intersections? Are warrants already met for perk hour traffic for any turn lanes?	Edit EA	Additional text has been added to this section.
La Plata County	81; Section 4.12.2	Transportation	County roads are not included or discussed for increased vehicle trips wear and tear on roads at all.	Already in Document	Refer to section 4.12.
La Plata County	81; Section 4.12.2	Transportation	What are the current levels of traffic for operations and maintenance on county roads? Increased maintenance cost will result from increased heavy truck traffic.	Edit EA	Additional text has been added to this section.
La Plata County	81; Section 4.12.3	Transportation	If Alternative C does not use the proposed piping for water and plans to use haul trucks for water and completion, the increase of traffic on county roads is not addressed. Traffic levels would increase during the estimated five years of the proposed action and for the estimated duration of the well life. The "current baseline" should be identified.	Already in Document	Under Alternative C there would be no change in the current traffic levels. WPX currently drills 8 months a year within the Middle Mesa portion of the Rosa Unit. The current drilling program includes hauling produced water to disposal facilities.
La Plata County	81; Section	Transportation	Again, Alternative C is proposing to use haul trucks for water and completion, but increased	Already in Document	Under Alternative C there would be no change in the current traffic levels. WPX currently drills 8 months a year within the

Commenter	Page/ Paragraph	Category	Comment	Action	Response
	4.12.4		traffic on county roads is not addressed. Traffic levels would increase during the estimated 5 years of the proposed action and for the estimated duration of the well life.		Middle Mesa portion of the Rosa Unit. WPX would continue their drilling program. Traffic levels would increase under the proposed action for the duration of drilling and completion. During operation, increased traffic levels are not anticipated.
La Plata County	26; Table 3-1	Air Quality	La Plata County air shed is not included in this document, but should be included. The EPA and CDHPE attainment is also not included and should be. If San Juan county was reported as non-attainment, that has the potential to include La Plata County into non-attainment, due to the air shed.	Edit EA	The action alternatives would be located in San Juan and Rio Arriba Counties, New Mexico. Additional information on air quality in this area is contained in Chapter 3 of the PRMP/FEIS (USDI/BLM 2003a), which this analysis tiers to and incorporates. The PRMP/FEIS defines the region of influence for air quality for pollutants other than ozone as a few miles downwind from a source (USDI/BLM 2003a). Since there would be traffic associated with the action alternatives on paved and unpaved roads in La Plata County, the region of influence for indirect air quality impacts associated with vehicular traffic emissions includes La Plata County. The region of influence for ozone includes the Four Corners area as defined in the PRMP/FEIS (USDI/BLM 2003a). Air quality impacts in La Plata County may result from traffic emissions and regional transport of emissions from the project area. La Plata County is in attainment of all EPA NAAQS. Impacts to ozone levels are evaluated in the document and have been edited to include La Plata County. San Juan and Rio Arriba Counties, New Mexico and La Plata County are in attainment of all EPA NAAQS.
La Plata County	26; Table 3-2	Air Quality	Does not include La Plata County ozone data collected by SUIT AQ program, USFS or CDPHE.	Edit EA	There is no Colorado Department of Public Health (CDPHE), Air Pollution Control Division, Technical Services Program quality-assured and verified ozone monitoring station in La Plata County. The nearest CDPHE quality-assured and verified ozone monitoring station is located at Cortez, Colorado.

APPENDIX C
APPLICATIONS FOR PERMIT TO DRILL

APPENDIX D
WATER MANAGEMENT SYSTEM PLATS

APPENDIX E

DESCRIPTION OF HORIZONTAL DIRECTIONAL DRILLING

INTRODUCTION

The following description for the horizontal directional drilling (HDD) construction process has been provided by J.D. Hair & Associates. The description is representative of the process that would be used under the proposed action.

The components of an HDD rig used for pipeline construction are similar to those of an oil well drilling rig, except the HDD rig is equipped with an inclined ramp as opposed to a vertical mast. HDD pilot hole operations are not unlike those involved in drilling a directional oil well. Drill pipe and downhole tools are generally interchangeable and drilling fluid is used throughout the construction process to transport material, such as drilled spoil, materials that reduce friction, and materials that stabilize the hole.

Installation of a pipeline by HDD is generally accomplished in three stages as illustrated in Figure 1. The first stage consists of directionally drilling a small diameter pilot hole along a directional path. The second stage, prereaming, involves enlarging this pilot hole to a diameter suitable for installation of the pipeline. The third stage consists of pulling the pipe back through the enlarged hole.

PILOT HOLE DIRECTIONAL DRILLING

Pilot hole directional control is achieved by using a non-rotating drill string with an asymmetrical leading edge. The asymmetry of the leading edge creates a steering bias while the non-rotating aspect of the drill string allows the steering bias to be held in a specific position while drilling the hole. If a change in direction is required for the path of the pilot hole, the drill string is rolled so that the direction of bias is the same as the desired change in direction. The direction of bias is referred to as the tool face. Straight progress of the pilot hole may be achieved by drilling with a series of offsetting tool face positions. Leading edge asymmetry can be accomplished by several methods. This is illustrated schematically in Figure 2.

It is common in soft soils to achieve drilling progress by hydraulic cutting with a jet nozzle. In this case, the direction of flow from the nozzle can be offset from the central axis of the drill string; thereby, creating a steering bias. This steering bias may be accomplished by blocking selected nozzles on a standard roller cone bit or by custom fabricating a jet deflection bit. If hard spots are encountered during the HDD process, the drill string may be rotated to drill without directional control until the hard spot has been penetrated.

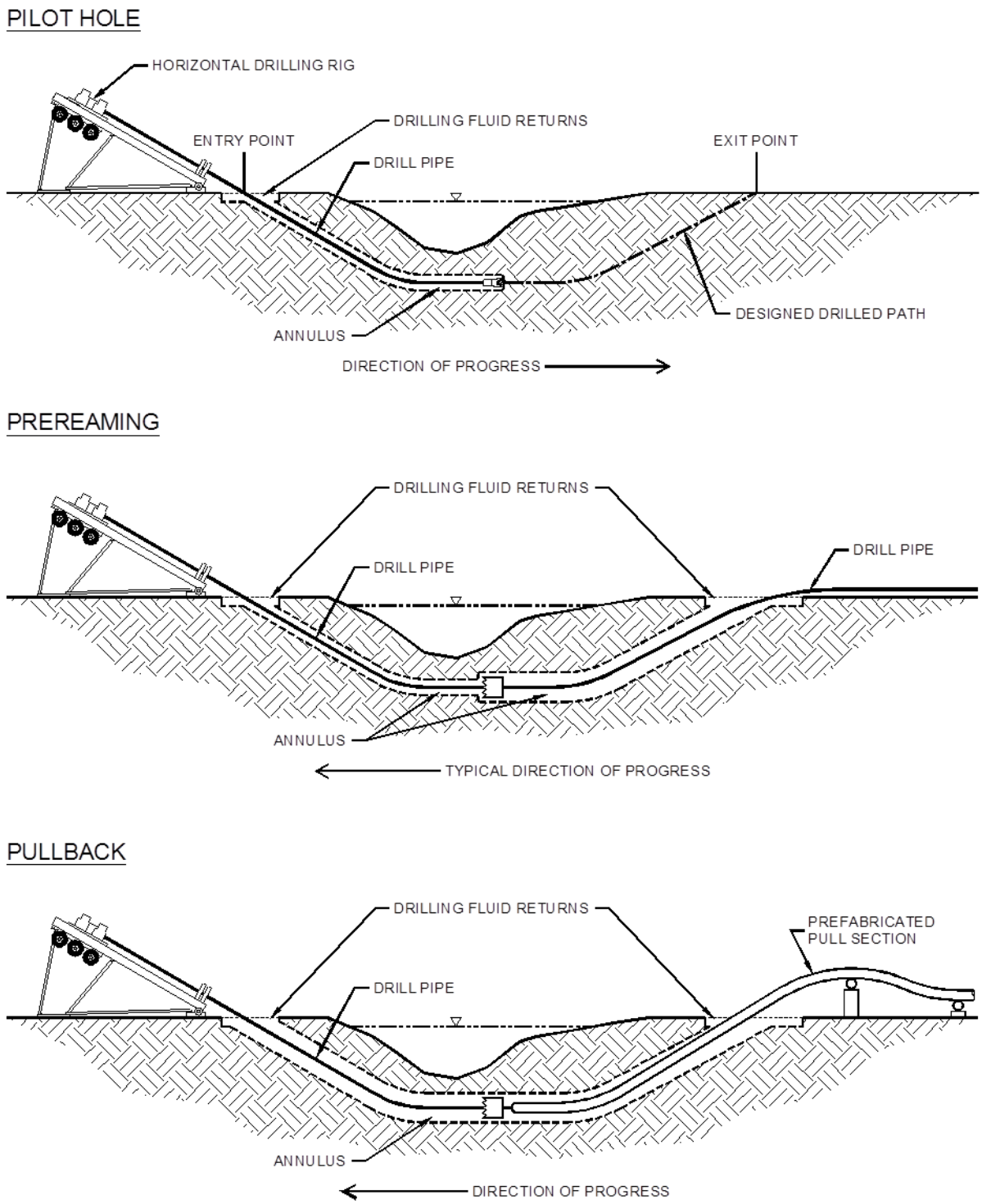

Figure 1. The HDD process.

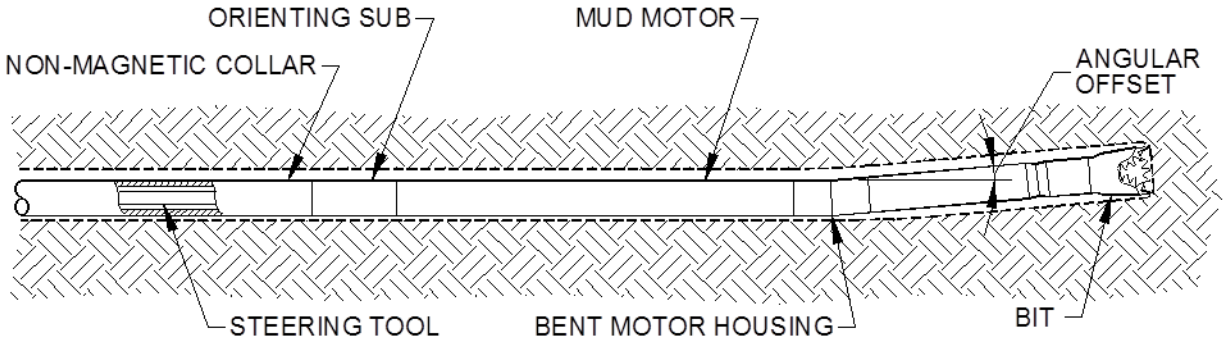

Figure 2. Bottom hole assembly.

DOWNHOLE MOTORS

Downhole mechanical cutting action required for harder soils is provided by downhole hydraulic motors. Downhole hydraulic motors, commonly referred to as mud motors, convert hydraulic energy from drilling mud pumped from the surface to mechanical energy at the bit. This HDD process allows for bit rotation without drill string rotation.

There are two basic types of mud motors: positive displacement motors and turbine motors. A positive displacement mud motor consists of a spiral-shaped stator containing a sinusoidal shaped rotor. Mud flow through the stator imparts rotation to the rotor, which is connected through a linkage to the bit.

In some cases, a larger diameter wash pipe may be rotated concentrically over the non-rotating steerable drill string. This serves to prevent sticking of the steerable string and allows its tool face to be freely oriented. It also maintains the pilot hole if it becomes necessary to withdraw the steerable string.

DOWNHOLE SURVEYING

The path of the pilot hole is monitored during drilling by taking periodic readings of the inclination and azimuth of the leading edge. Readings are taken with an instrument, commonly referred to as a survey probe, that is inserted in the drill collar and as close as possible to the drill bit. Transmission of downhole probe survey readings to the surface is generally accomplished through a wire running inside the drill string. The readings, in conjunction with measurements of the distance drilled since the last probe survey, are used to calculate the horizontal and vertical coordinates (inclination) along the pilot hole relative to the initial entry point on the surface.

Azimuth readings are taken from the earth's magnetic field. These readings are subject to interference from downhole tools, drill pipe, and magnetic fields created by adjacent structures. Therefore, the probe must be inserted in a non-magnetic collar and positioned in the drill string so that it is adequately isolated from downhole tools and the drill pipe. The combination of bit, mud motor (if used), subs, survey probe, and non-magnetic collars is referred to as the Bottom Hole Assembly (BHA). A typical bottom hole assembly is shown as Figure 2.

SURFACE MONITORING

The pilot hole path may also be tracked using a surface monitoring system. Surface monitoring systems determine the location of the survey probe downhole by taking measurements from a grid or point on the surface. An example of this is the TruTracker System. This system uses a surface coil of known location to induce a magnetic field. The probe senses its location relative to this induced magnetic field and communicates this information to the surface. This is shown schematically in Figure 3 below.

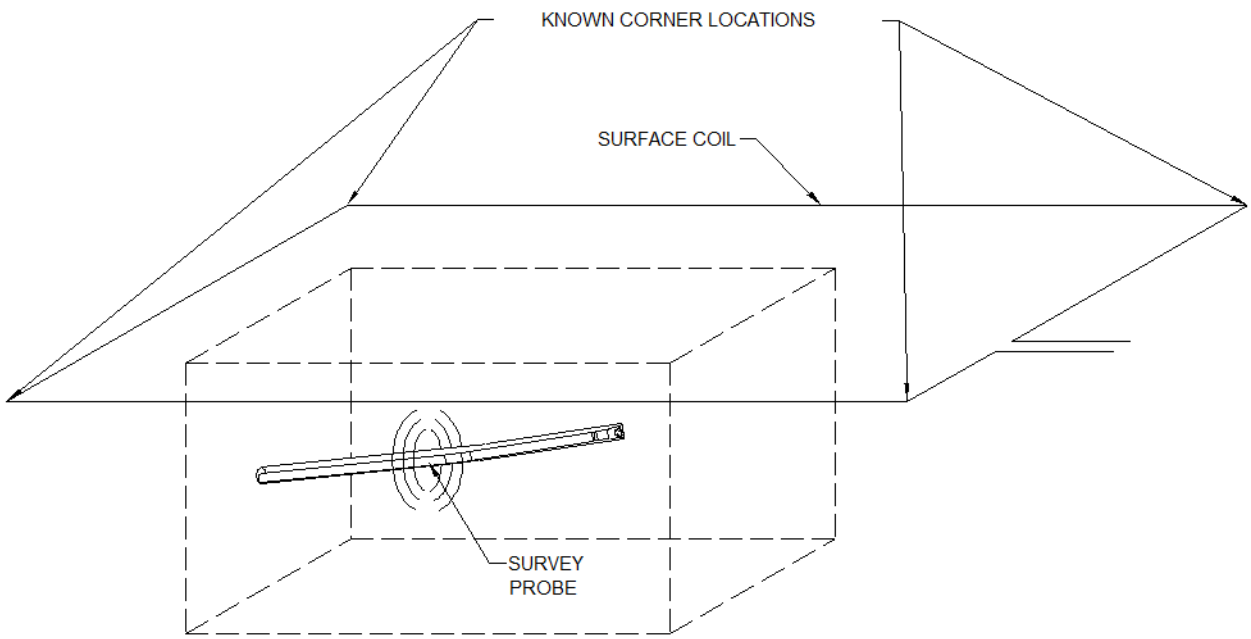

Figure 3. TruTracker surface monitoring system.

PREREAMING & PULLBACK

Enlarging the pilot hole is accomplished using either prereaming passes prior to pipe installation or simultaneously during pipe installation.

PREREAMING

During the prereaming stage of the HDD process, reamers attached to the drill string at the HDD exit point are rotated and drawn to the drilling rig; thus, enlarging the pilot hole. Reaming tools typically consist of a circular array of cutters and drilling fluid jets. Most contractors will opt to preream a pilot hole before attempting to install pipe.

It is also possible to ream the pilot hole from the HDD entry point. In this case, reamers fitted into the drill string at the drill rig are rotated and thrust away from the rig; thereby, enlarging the pilot hole.

PULLBACK

The third stage of the HDD process consists of pulling the pipe back through the prereamed hole. This stage in the process is undertaken after completion of prereaming the pilot hole or, for smaller diameter lines in soft soils, after completion of the pilot hole. Pipe installation through the prereamed or pilot hole is accomplished by attaching the prefabricated pipeline pull section behind a reaming assembly at the HDD exit point and pulling the reaming assembly and pull section back to the drilling rig (HDD entry point). A swivel is utilized to connect the pull section to the leading reaming assembly in order to minimize torsion transmitted to the pipe. The pull section is supported using a combination of roller stands, pipe handling equipment, or a flotation ditch to minimize tension and prevent damage to the pipe.

APPENDIX F

BIOLOGICAL SURVEY REPORTS

APPENDIX G

VISUAL CONTRAST RATING WORKSHEETS

APPENDIX H

ASSUMPTIONS USED IN THE AIR EMISSIONS CALCULATOR AND SUMMARY CALCULATIONS