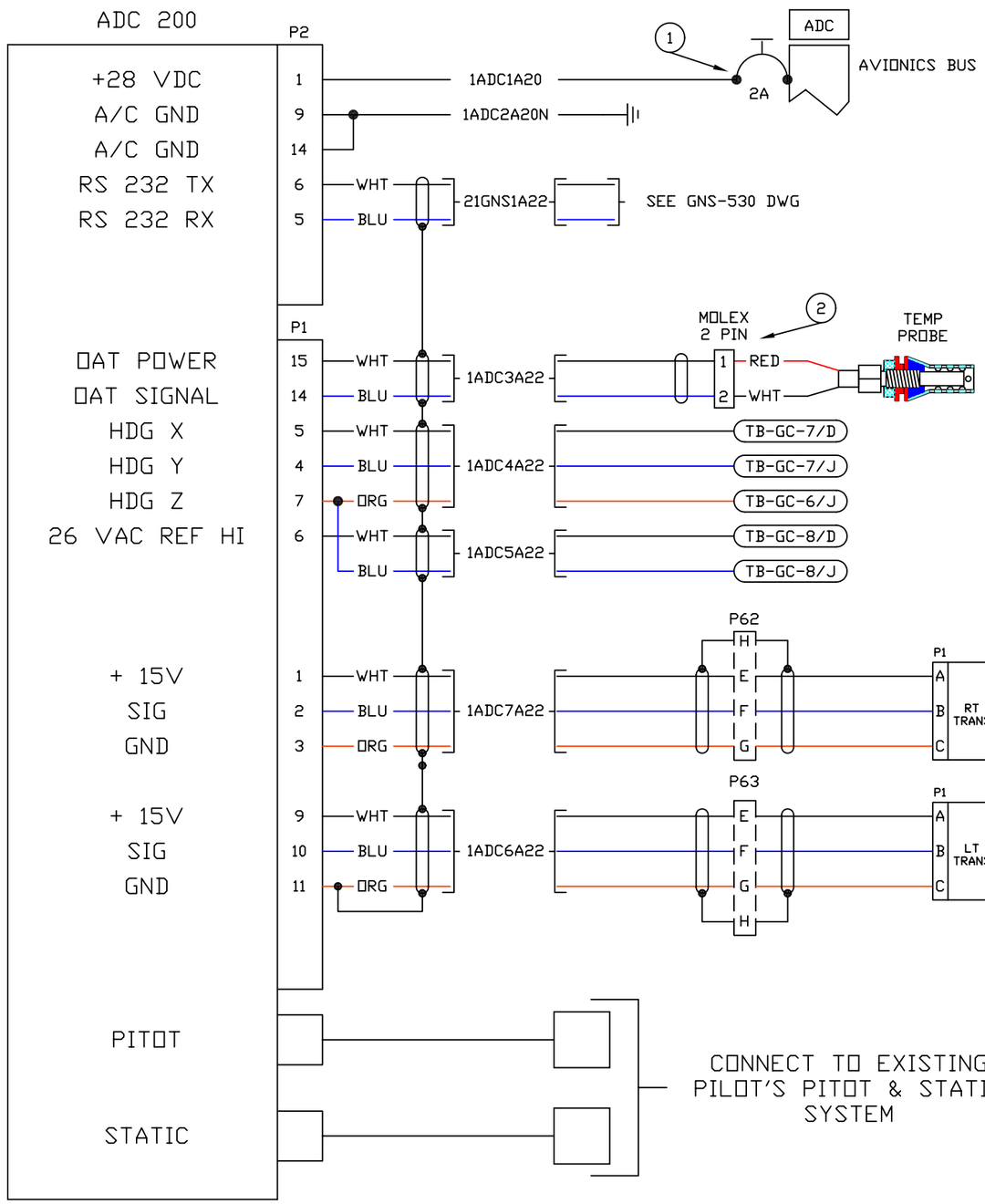

GENERAL NOTES:

1) UNLESS NOTED ALL WIRES ARE #22 AWG MIL22759/16 AND MIL27500/18.
2) ALL WORK PERFORMED IN ACCORDANCE WITH MANUFACTURERS INSTALLATION INSTRUCTIONS, AND AC43.13-1B/2A.
3) ---------- DENOTES EXISTING WIRING AND/OR COMPONENTS.
4) GROUND AT CONNECTOR BACKSHELL OR RACK.
5) ///////// DENOTES REMOVED WIRING.
6) THIS DOCUMENT CONTAINS CONFIDENTIAL AND/OR PROPRIETARY INFORMATION, SOME OR ALL OF WHICH MAY BE LEGALLY PRIVILEGED. IT IS ONLY FOR THE NAMED RECIPIENT. IF YOU ARE NOT THE NAMED RECIPIENT YOU MUST NOT USE, DISCLOSE, DISTRIBUTE, COPY, PRINT, OR RELY ON THIS DOCUMENT.

LIST OF MATERIALS

ITEM	QTY	DESCRIPTION	MAT'L	SERIAL NO.	PART NO.	REMARKS
1	1	CIRCUIT BREAKER, 2 AMP	.	.	KLIXON # 7274-2-2	.
2	2	MOLEX 2 PIN	.	N/A	03-06-2023/03-06-1023	.
3	1		.	N/A		.
4	1		.	.		.
5	.		.	.	.	.
6	AS REQ'D.		.	.	.	.
7						
8						
9						
10						

PROPRIETARY INFORMATION

FAA REPAIR STATION FE6R532N
4444 W. AERONCA STREET
BOISE, ID 83705-5090
PHO 208-338-1800 FAX 208-338-1830

PROJECT NO: X			WESTERN AIRCRAFT INC.
APPROVALS	DATE		TITLE: ADC-200
DRAWN BY: MKB	11/21/02		
APPR. BY:			
OWNER: OAS/BLM			
SERIAL NO: 423			SIZE: B / SCALE: NONE / DWG NO: 02-W6033-04 / REV: --
AIRCRAFT MAKE: DEHAVILLAND	MODEL: DHC-6 300	REG. NO: N49SJ	DATE: 12-11-02 / SHEET: 1 OF 1