REVISIONS				
ZONE	REV	DESCRIPTION	DATE	APPROVED

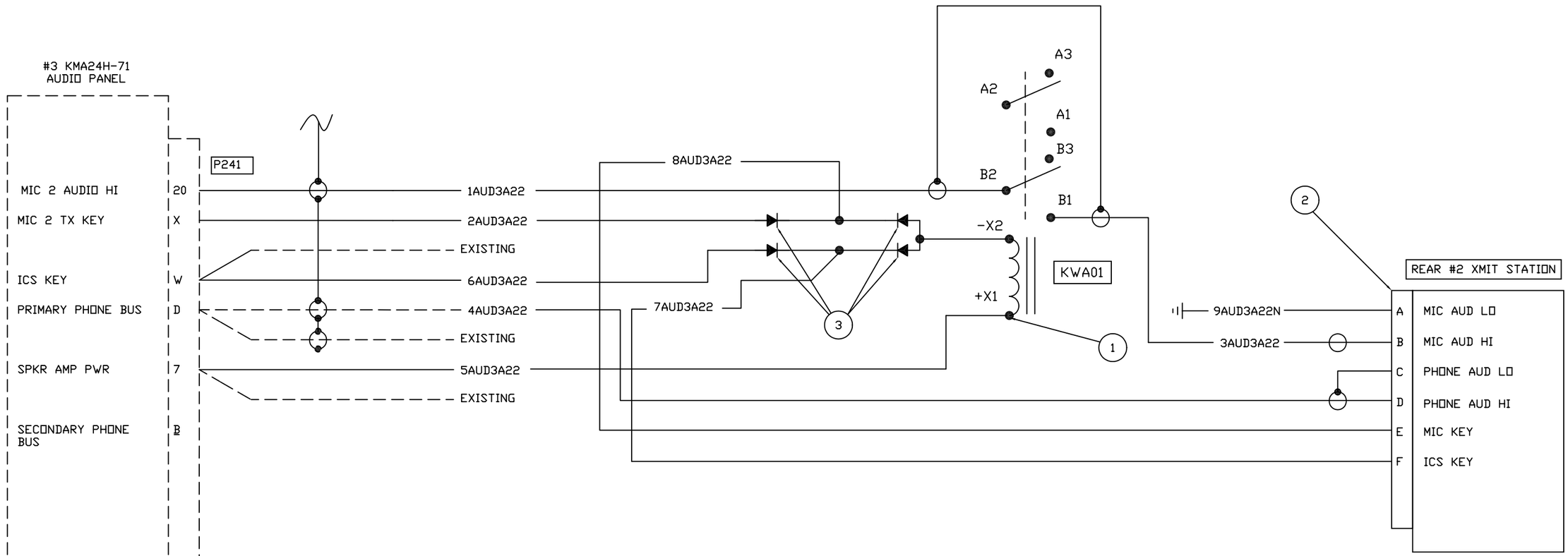

PROPRIETARY INFORMATION

GENERAL NOTES:

1) UNLESS NOTED ALL WIRES ARE #22 AWG MIL22759/16 AND MIL27500/18.
2) ALL WORK PERFORMED IN ACCORDANCE WITH MANUFACTURERS INSTALLATION INSTRUCTIONS, AND AC43.13-1B/2A.
3) ---------- DENOTES EXISTING WIRING AND/OR COMPONENTS.
4) GROUND AT CONNECTOR BACKSHELL OR RACK.
5) ////////// DENOTES REMOVED WIRING.
6) THIS DOCUMENT CONTAINS CONFIDENTIAL AND/OR PROPRIETARY INFORMATION, SOME OR ALL OF WHICH MAY BE LEGALLY PRIVILEGED. IT IS ONLY FOR THE NAMED RECIPIENT. IF YOU ARE NOT THE NAMED RECIPIENT YOU MUST NOT USE, DISCLOSE, DISTRIBUTE, COPY, PRINT, OR RELY ON THIS DOCUMENT.

LIST OF MATERIALS

ITEM	QTY	DESCRIPTION	MAT'L	SERIAL NO.	PART NO.	REMARKS
1A	1	RELAY	.	.	M83536/2-028M	.
1B	1	BASE & PINS	.	.	M12883/52-001	.
1C	1	RAIL	.	.	M12883/53-001	.
2	1	DROP CORD CONNECTOR	.	.	MS3120E10-6S	.
3	4	DIODES	.	.	IN4005	.
4	.	.	.	.	.	.
5	.	.	.	.	.	
6	.	.	.	.	.	
7	.	.	.	.	.	
8	AS REQ'D	.	.	.	.	

FAA REPAIR STATION FE6R532N
4444 W. AERONCA STREET
BOISE, ID 83705-5090
PHO 208-338-1800 FAX 208-338-1830

PROJECT NO.

APPROVALS	DATE
DRAWN BY MLO	12-09-02
APPROVED BY	

OWNER: OAS/BLM

SERIAL NO: 423

AIRCRAFT MAKE: DeHAVILLAND

MODEL: DHC-6 300

REG. NO.: N49SJ

WESTERN AIRCRAFT INC.

TITLE: **REAR AUDIO PANEL MODIFICATION**

SIZE: B

SCALE: NONE

DWG NO.: 02-W6033-06

REV.: ORG

DATE: 12-09-02

SHEET 1 OF 1