PROPRIETARY INFORMATION

REVISIONS				
ZONE	REV	DESCRIPTION	DATE	APPROVED

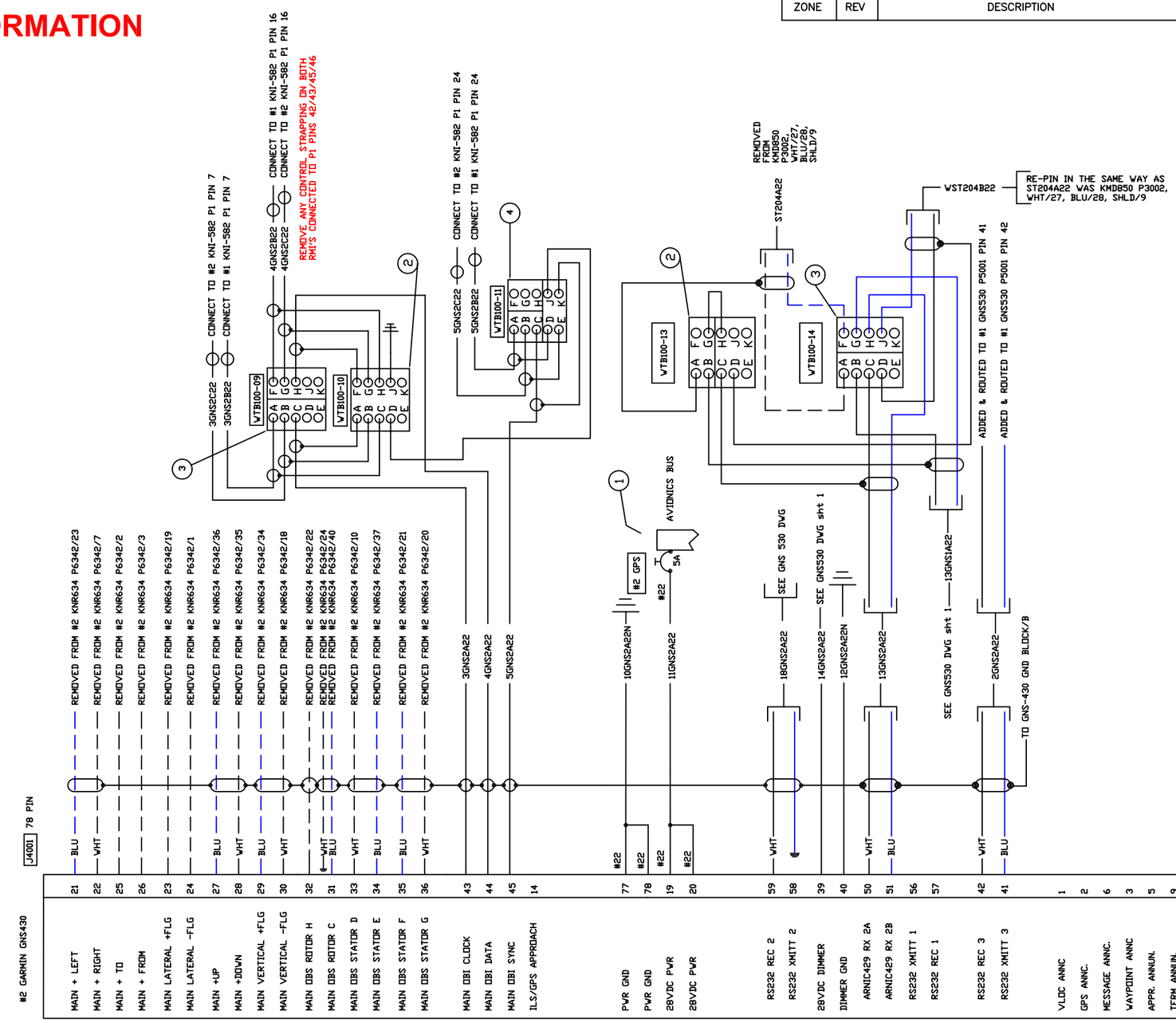

GENERAL NOTES:

1) UNLESS NOTED ALL WIRES ARE #22 AWG MIL22759/16 AND MIL27500/18.
2) ALL WORK PERFORMED IN ACCORDANCE WITH MANUFACTURERS INSTALLATION INSTRUCTIONS, AND AC43.13-1B/2A.
3) ---------- DENOTES EXISTING WIRING AND/OR COMPONENTS.
4) GROUND AT CONNECTOR BACKSHELL OR RACK.
5) ///////// DENOTES REMOVED WIRING.
6) THIS DOCUMENT CONTAINS CONFIDENTIAL AND/OR PROPRIETARY INFORMATION, SOME OR ALL OF WHICH MAY BE LEGALLY PRIVILEGED. IT IS ONLY FOR THE NAMED RECIPIENT. IF YOU ARE NOT THE NAMED RECIPIENT YOU MUST NOT USE, DISCLOSE, DISTRIBUTE, COPY, PRINT, OR RELY ON THIS DOCUMENT.

LIST OF MATERIALS

ITEM	QTY	DESCRIPTION	MAT'L	SERIAL NO.	PART NO.	REMARKS
1	1	CIRCUIT BREAKER, 5A	.	.	KLIXON # 7274-2-5	.
2	2	TERMINAL BLOCK	.	.	M81714/2-DA1	.
3	2	TERMINAL BLOCK	.	.	M81714/2-DB1	.
4	1	TERMINAL BLOCK	.	.	M81714/2-DC1	.
5	.	.	.	.	.	.
6	.	.	.	.	.	.
7	.	.			.	
8	.	.			.	
9						
10						

FAA REPAIR STATION FE6R532N

4444 W. AERONCA STREET
BOISE, ID 83705-5090
PHO 208-338-1800 FAX 208-338-1830

OWNER: OAS/BLM

SERIAL NO: 423

AIRCRAFT MAKE: DeHAVILLAND

MODEL: DHC-6 300

REG. NO.: N49SJ

PROJECT NO.

APPROVALS	DATE
DRAWN BY MLO	11-18-02
APPROVED BY	

WESTERN AIRCRAFT INC.

TITLE: **#2 GNS430 GPS NAV/COM**

SIZE: B | SCALE: NONE | DWG NO. 02-W6033-05 | REV. --

DATE: 12-11-02 | SHEET 1 OF 3