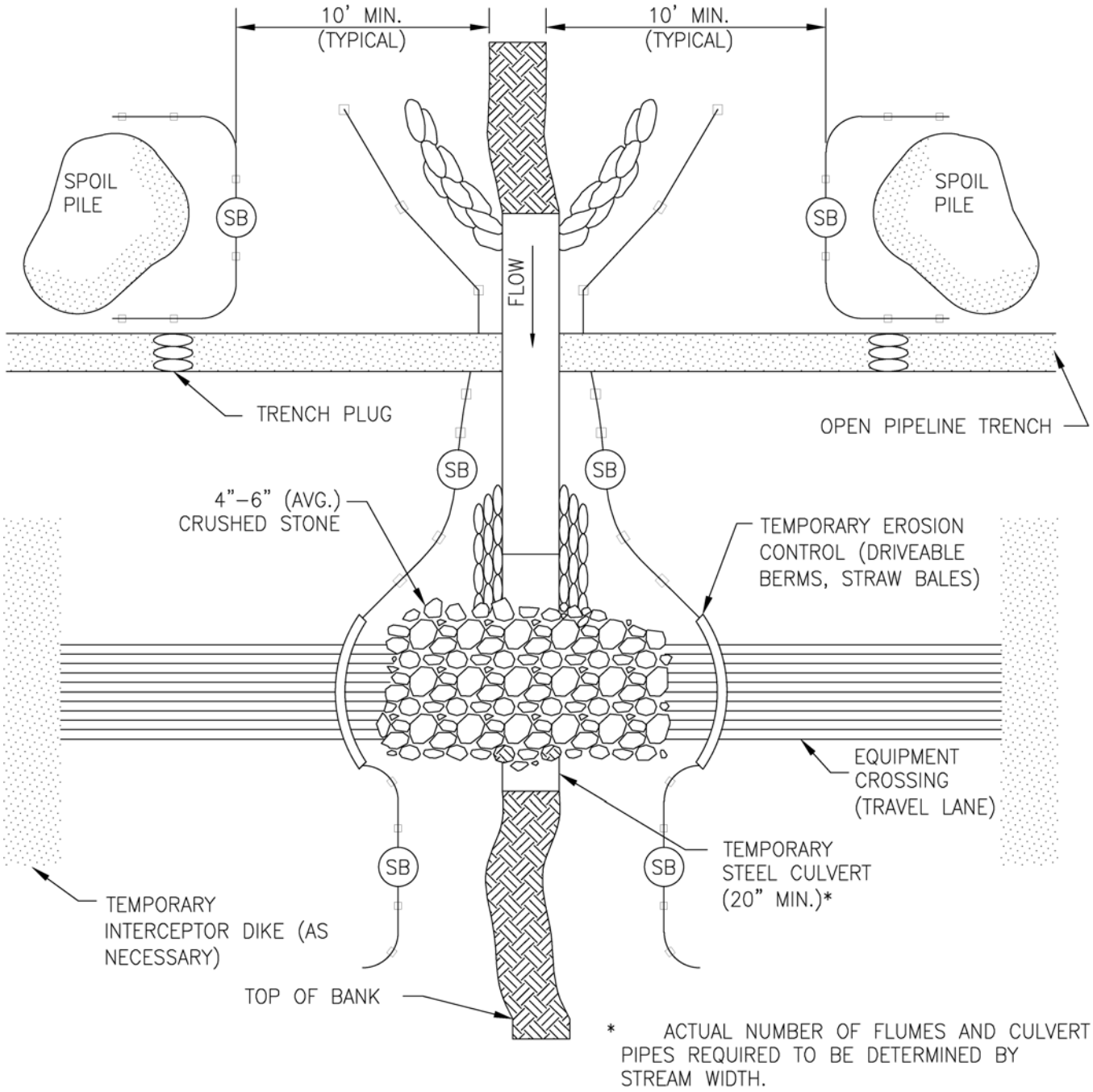

NOTES:

1. (SB) TEMPORARY SEDIMENT BARRIER OF SILT FENCE AND/OR STRAW BALES, OR APPROPRIATE MATERIALS.

2. FOR MINOR WATERBODIES, COMPLETE TRENCHING AND BACKFILLING IN THE WATERBODY (NOT INCLUDING BLASTING OR OTHER ROCK BREAKING MEASURES) WITHIN 24 HOURS. IF A FLUME IS INSTALLED WITHIN THE WATERBODY DURING MAINLINE ACTIVITIES, IT CAN BE REMOVED JUST PRIOR TO LOWERING IN THE PIPELINE. THE 24–HOUR TIMEFRAME STARTS AS SOON AS THE FLUME IS REMOVED.

3. FOR INTERMEDIATE WATERBODIES, COMPLETE TRENCHING AND BACKFILLING IN THE WATERBODY (NOT INCLUDING BLASTING OR OTHER ROCK BREAKING MEASURES) WITHIN 48 CONTINUOUS HOURS, IF FEASIBLE.

BakkenLink Pipeline, LLC			
TYPICAL CONSTRUCTION WET CROSSING			
DRAWN BY: PCS		CHK'D. BY: PCS	
DATE: 11–07–11		APPRV. BY: PCS	
DWG. NO. DETAIL–11			REV A

z:\quintana\10045\working\civil\typicals\detail-11.dwg
01-03-12 14:46 10045 1 EM

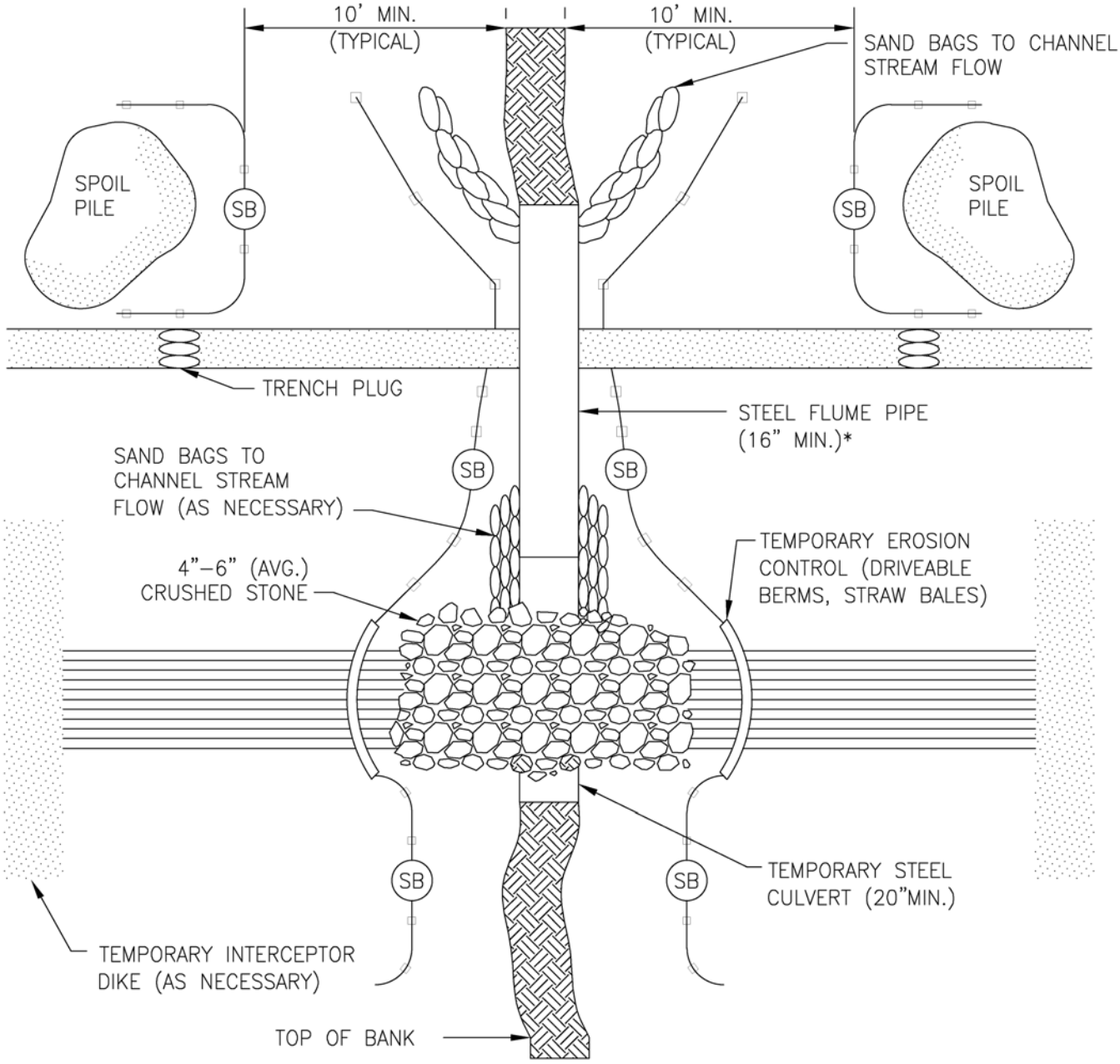

- ACTUAL NUMBER OF FLUMES AND CULVERT PIPES REQUIRED TO BE CONTINUED BY STREAM WIDTH.

NOTES:

1. (SB) TEMPORARY SEDIMENT BARRIER OF SILT FENCE AND/OR STRAW BALES, OR OTHER APPROPRIATE MATERIALS.
2. SAND BAGS MUST BE FILLED WITH SAND FREE OF SILT, ORGANICS, AND OTHER MATERIAL.
3. ALIGN FLUME(S) TO PREVENT BANK EROSION AND STREAM SCOUR.
4. CONDUCT ALL IN–STREAM ACTIVITY (EXCEPT BLASTING OR OTHER ROCK BREAKING MEASURES) WITH THE FLUME(S) IN PLACE. FLUME PIPE(S) MAY NOT BE REMOVED FOR LOWERING IN OR INITIAL STREAMBED RESTORATION EFFORTS.
5. THE ENDS OF THE FLUME AND CULVERT MUST EXTEND TO AND UNDISTURBED AREA.

BakkenLink Pipeline, LLC	
TYPICAL CONSTRUCTION FLUMED CROSSING	
DRAWN BY: PCS	CHK'D. BY: PCS
DATE: 11–07–11	APPRV. BY: PCS
DWG. NO. DETAIL–12	REV A

z:\quintana\10045\working\civil\typicals\detail–12.dwg 1 EM 10045 14:47 01–03–12

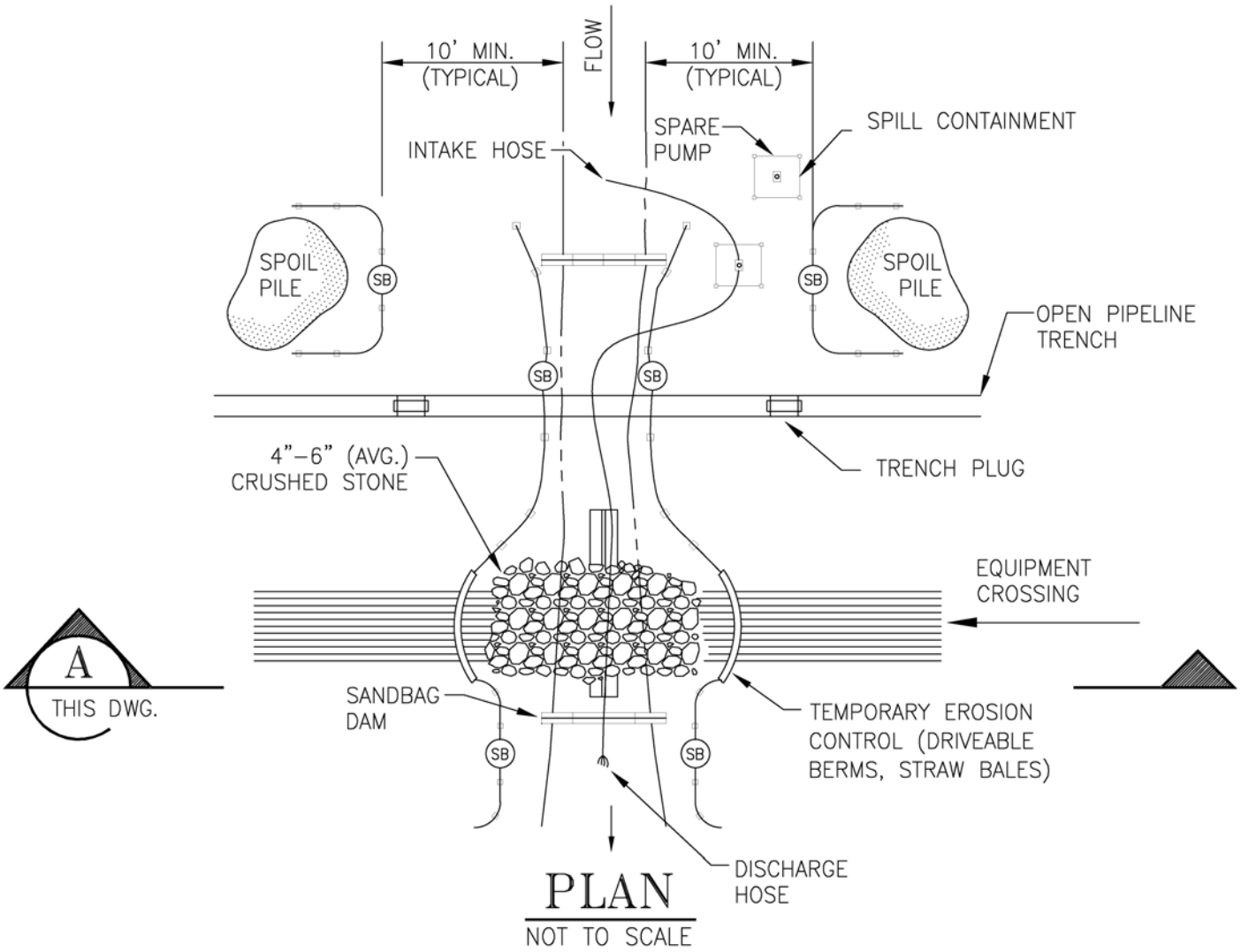

PLAN

NOT TO SCALE

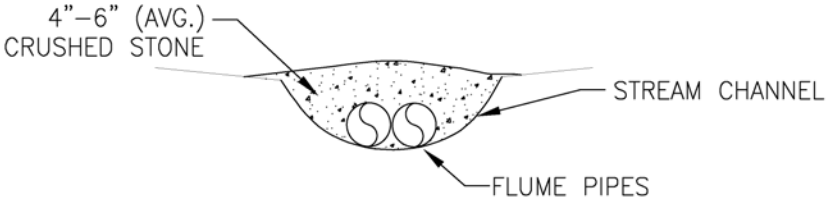

SECTION

SCALE: NOT TO SCALE

A
THIS DWG.

NOTES:

1. SB TEMPORARY SEDIMENT BARRIER OF SILT FENCE AND/OR STRAW BALES, OR APPROPRIATE MATERIALS.
2. INSTALL AND SEAL SANDBAGS UPSTREAM AND DOWNSTREAM OF THE CROSSING.
3. CREATE AN UPSTREAM SUMP USING SANDBAGS IF NATURAL SUMP IS UNAVAILABLE FOR THE INTAKE HOSE.
4. EXCAVATE ACROSS STREAM CHANNEL FOLLOWING WATER REROUTING.
5. DO NOT REFUEL OR STORE FUEL WITHIN 100 FEET OF THE WATERBODY, WHERE FEASIBLE.
6. MONITOR PUMPS AT ALL TIMES DURING STREAM CROSSING PROCEDURE.
7. USE SUFFICIENT PUMPS, INCLUDING ONSITE BACKUP PUMPS, TO MAINTAIN DOWNSTREAM FLOW.
8. SCREEN PUMP INTAKES.
9. NUMBER OF FLUME PIPES FOR EQUIPMENT BRIDGE WILL VARY DEPENDING ON SITE CONDITIONS.

BakkenLink Pipeline, LLC	
TYPICAL CONSTRUCTION DAM AND PUMP CROSSING	
DRAWN BY: PCS	CHK'D. BY: PCS
DATE: 11–07–11	APPRV. BY: PCS
DWG. NO. DETAIL–13	REV A

z:\quintana\10045\working\civil\typicals\detail-13.dwg
01-03-12 14:48 10045 1 EM

DIRECTIONAL DRILLING SHORE TO SHORE

NOT TO SCALE
CONDENSED FOR ILLUSTRATIVE PURPOSES

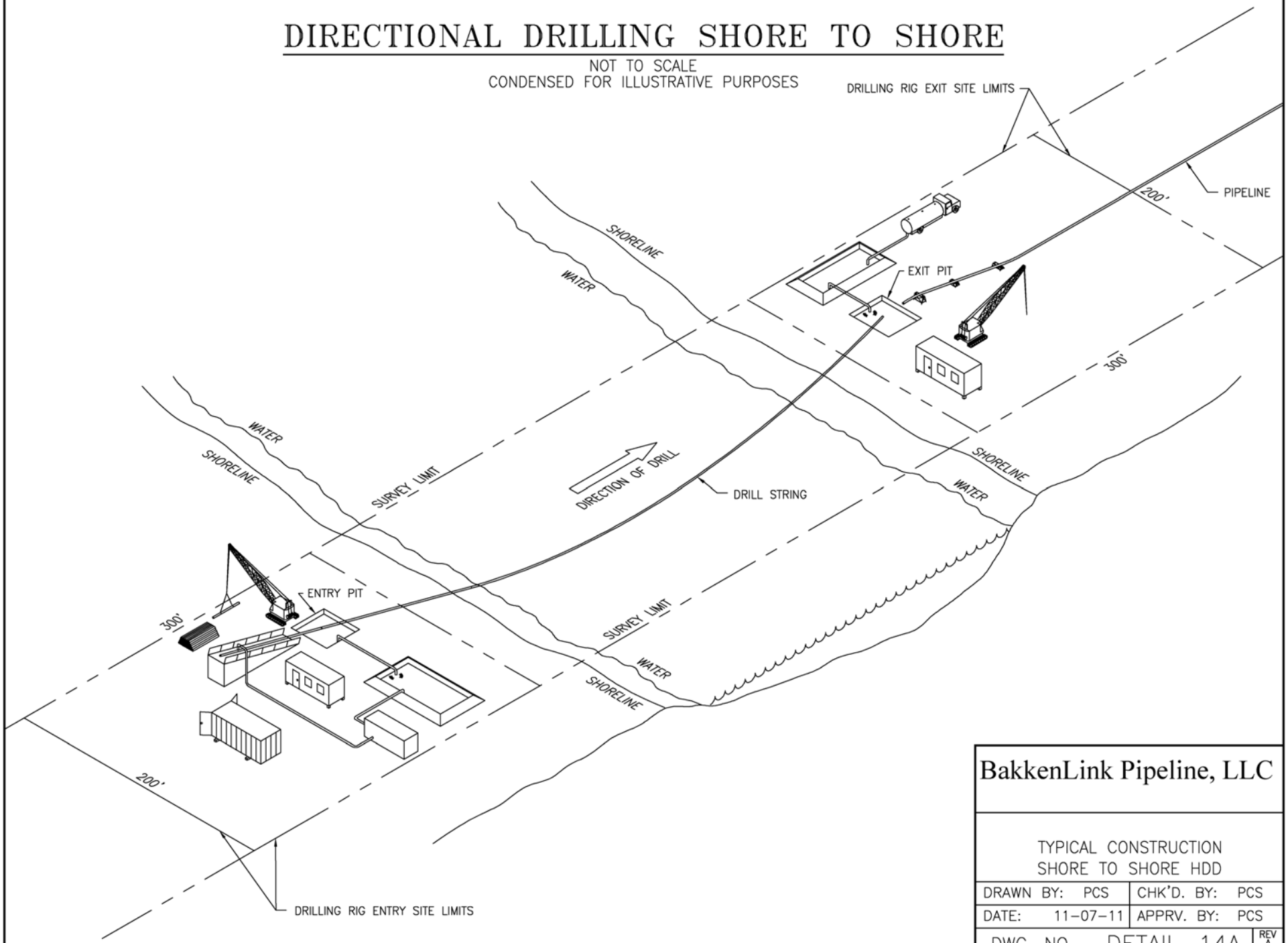

BakkenLink Pipeline, LLC	
TYPICAL CONSTRUCTION SHORE TO SHORE HDD	
DRAWN BY: PCS	CHK'D. BY: PCS
DATE: 11-07-11	APPRV. BY: PCS
DWG. NO. DETAIL-14A	REV A

z:\quintana\10045\working\civil\typicals\detail-14a.dwg 1 EM 10045 14:49 01-03-12

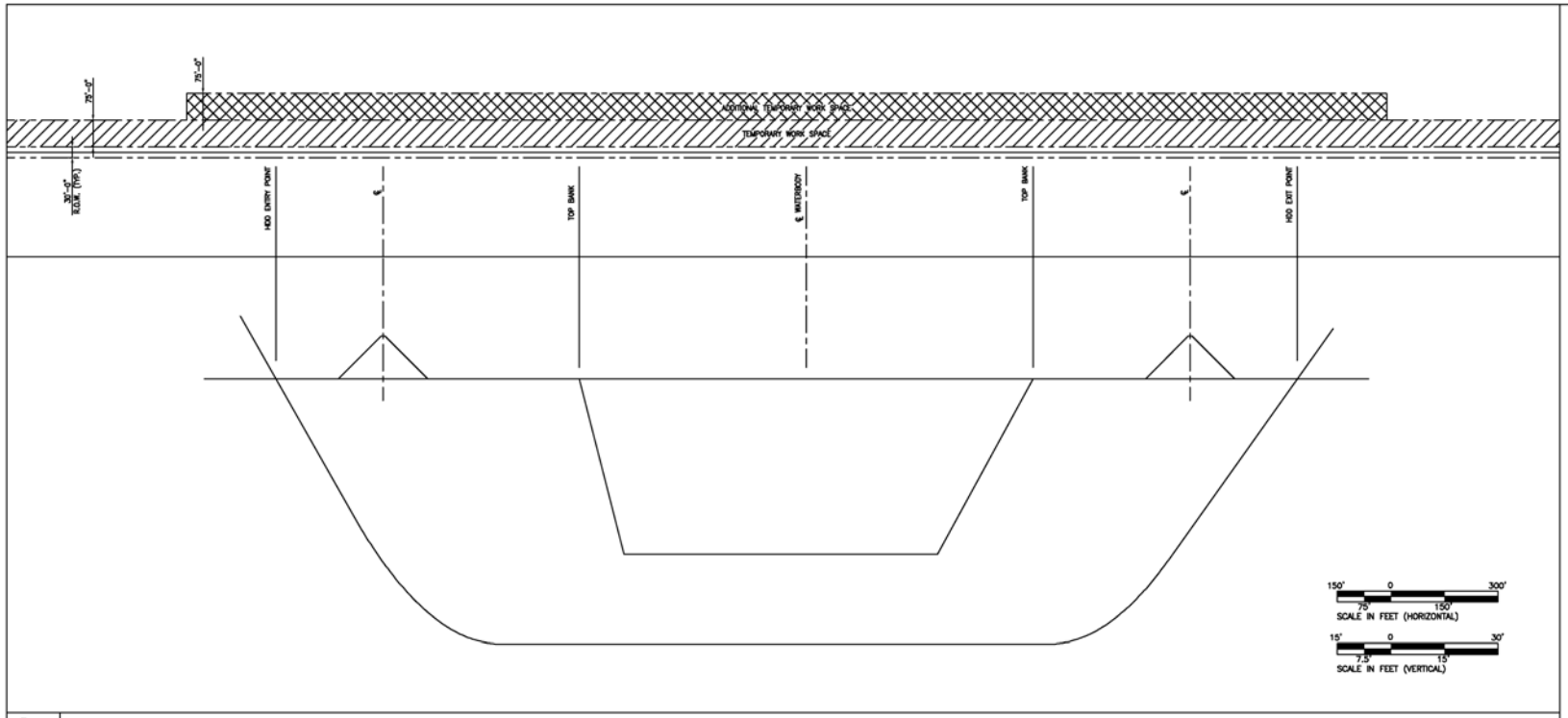

CROSSING INFORMATION	
PIPELINE DATA	
CONSTRUCTION WORK SPACE	

ENVIRONMENTAL MITIGATION/RESTORATION (SEE ENG. 00.000-00 FOR INDEX OF CODES)		
CLEAR AND GRADE METHOD		
TOPSOIL SALVAGE METHOD		
WATER	STREAMS	
CROSSING	WETLANDS	
STATIONS		
TEMPORARY	EROSION CONTROL CODE	
EROSION CONTROL	SLOPE BREAKER CODE	
PERMANENT	EROSION CONTROL CODE	
EROSION CONTROL	SLOPE BREAKER CODE	
RECLAMATION		
TIMING CONSTRAINTS		

LEGEND:

- ○ ENTRY OR EXIT POINT
- MLP MAINLINE PIPE
- TYPICAL PROPERTY TRACT NO.
- · GEOTECHNICAL BOREHOLE XXXXX
- TYPICAL WETLAND IDENTIFICATION
- TYPICAL PROPERTY LINES

EASEMENT/WORKSPACE:

- PERMANENT EASEMENT
- TEMPORARY WORK SPACE
- ADDITIONAL TEMPORARY WORK SPACE

REFERENCE DRAWINGS

DRAWING NO.	TITLE	DRAWING NO.	TITLE

REVISIONS

REV.	DATE	REMARKS	CKD.	COR.	APP.

ENG. RECORD		DATE:
DRAWN BY:	PCS	
CHECKED BY:		
PROJECT ENGR.:		
PROJECT MGR.:		
PROJECT APPR.:		
Project ID:	SCALE:	

BakkenLink Pipeline LLC

TYPICAL CONSTRUCTION
HDD PROFILE

DRAWN BY:	PCS	APPROVED BY:	
SCALE:	AS NOTED	PROJ. ENGR.:	
DATE:	11-07-11	PROJ. MGR.:	
CHECKED BY:		SHEET:	

DWG. NO. DETAIL-14B REV. A

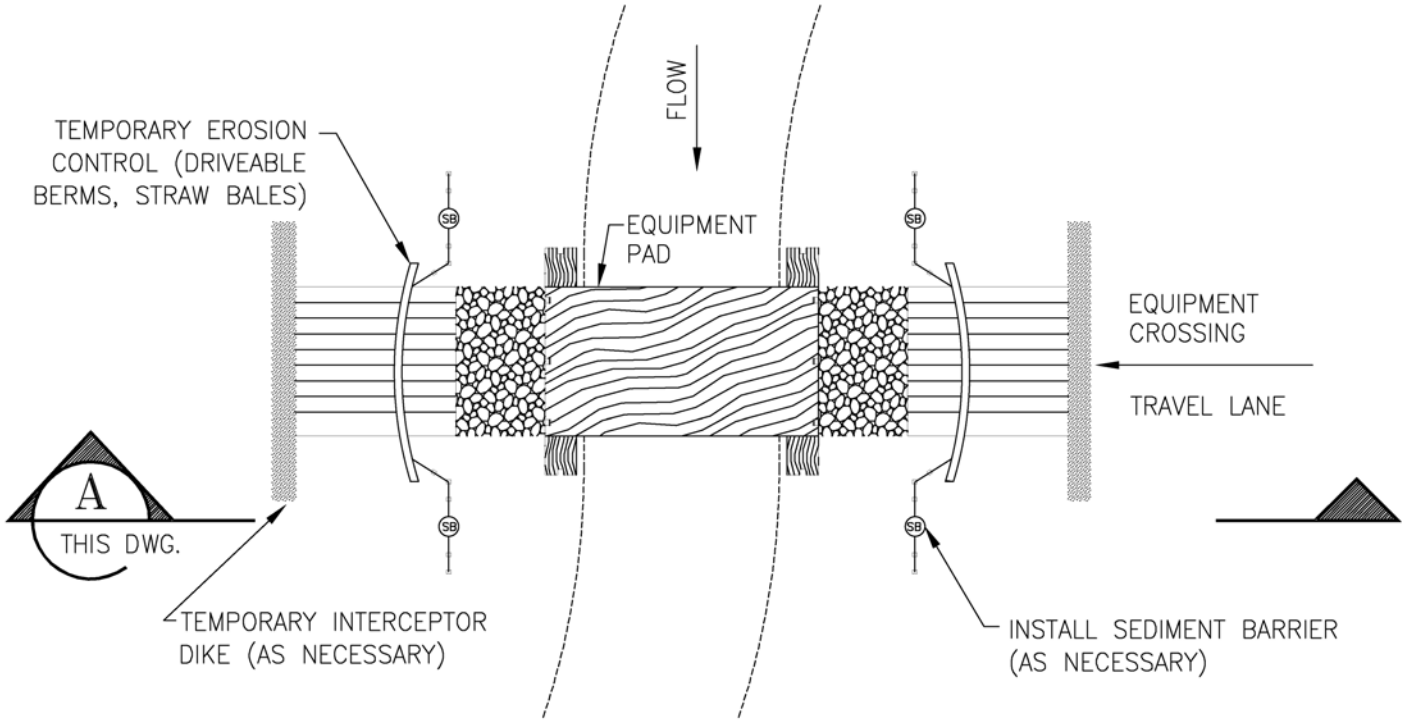

PLAN

NOT TO SCALE

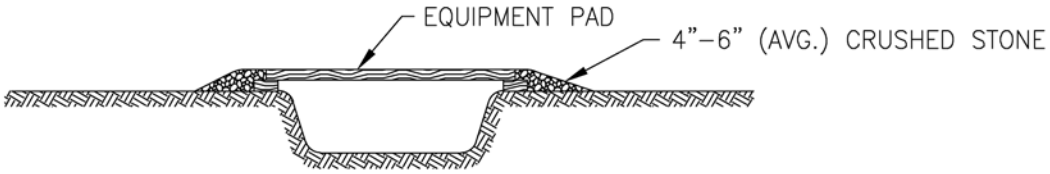

SECTION A

SCALE: NOT TO SCALE

THIS DWG.

NOTES:

1. SB TEMPORARY SEDIMENT BARRIER OF SILT FENCE AND/OR STRAW BALES, OR OTHER APPROPRIATE MATERIALS.
2. ADDITIONAL EQUIPMENT PADS CAN BE PUT SIDE BY SIDE IF EXTRA WIDTH IS REQUIRED.
3. EQUIPMENT PAD TYPICALLY CONSTRUCTED OF HARDWOOD; MUST ACCOMODATE THE LARGEST EQUIPMENT USED.
4. CRUSHED STONE MUST EXTEND A MINIMUM OF 10 FEET FROM THE TOP OF THE BANK.
5. CONSTRUCT BRIDGE TO PREVENT SOIL FROM ENTERING WATERBODY.

BakkenLink Pipeline, LLC	
TYPICAL CONSTRUCTION EQUIPMENT BRIDGE (PADS & CULVERTS)	
DRAWN BY: PCS	CHK'D. BY: PCS
DATE: 11–07–11	APPRV. BY: PCS
DWG. NO. DETAIL–15	REV A

z:\quintana\10045\working\civil\typicals\detail-15.dwg 01-03-12 14:51 10045 1 EM

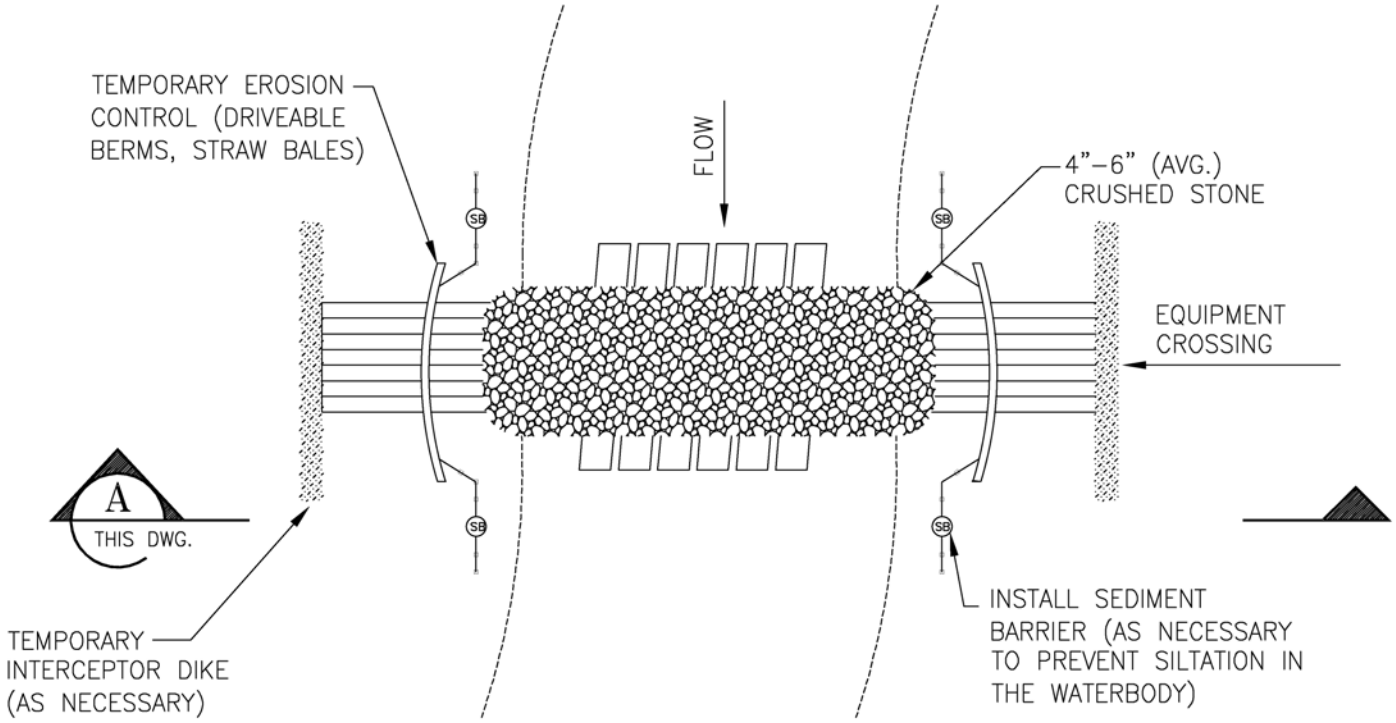

PLAN

NOT TO SCALE

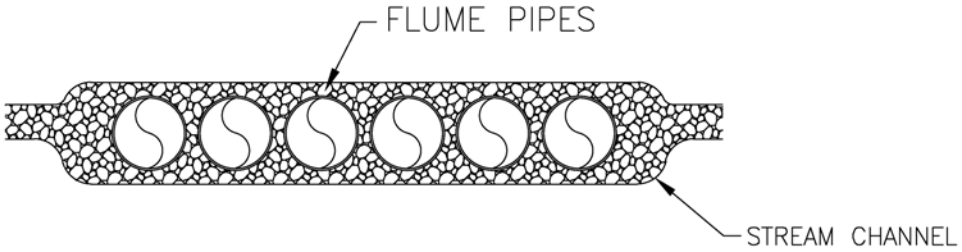

SECTION A

SCALE: NOT TO SCALE THIS DWG.

NOTES:

1. ALIGN FLUME PIPES TO PREVENT EROSION AND STREAMBED SCOUR.
2. (SB) TEMPORARY SEDIMENT BARRIER OF SILT FENCES AND/OR STRAW BALES, OR OTHER APPROPRIATE MATERIALS.

BakkenLink Pipeline, LLC	
TYPICAL CONSTRUCTION EQUIPMENT BRIDGE (STONE & CULVERTS)	
DRAWN BY: PCS	CHK'D. BY: PCS
DATE: 11–07–11	APPRV. BY: PCS
DWG. NO. DETAIL–16	REV A

01–03–12 14:52 10045 1 EM z:\quintana\10045\working\civil\typicals\detail-16.dwg

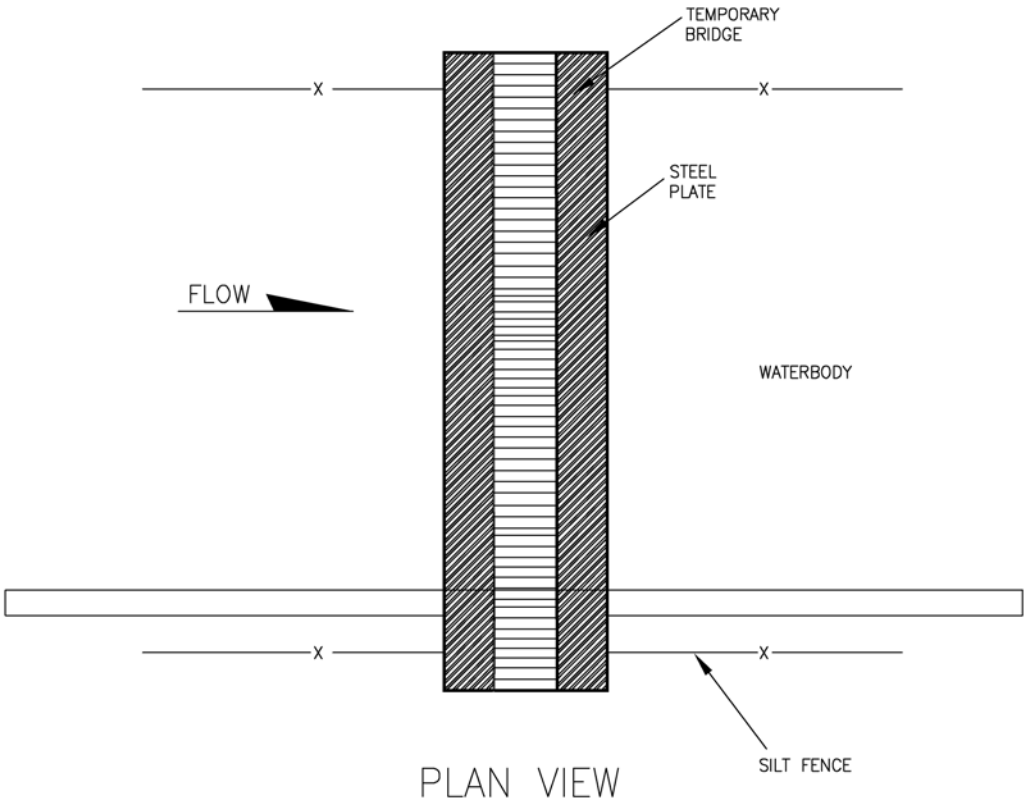

PLAN VIEW

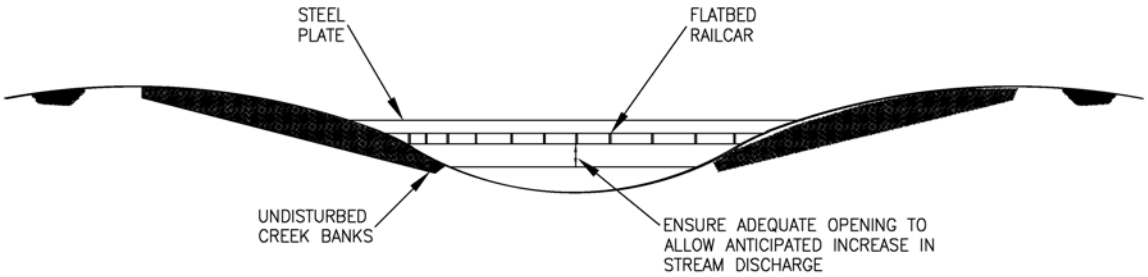

SECTION A–A

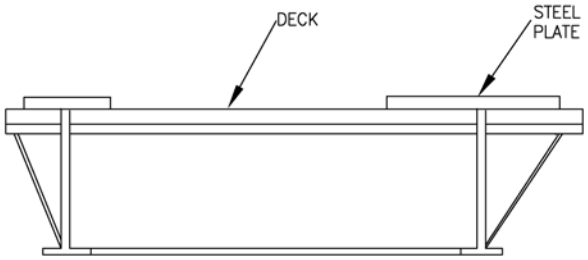

SECTION B–B

BakkenLink Pipeline, LLC	
TYPICAL CONSTRUCTION RAILCAR BRIDGE CROSSING	
DRAWN BY: PCS	CHK'D. BY: PCS
DATE: 11–14–11	APPRV. BY: PCS
DWG. NO. DETAIL–17	REV A

z:\quintana\10045\working\civil\typicals\detail–17.dwg

01–03–12 14:54 10045 1 EM

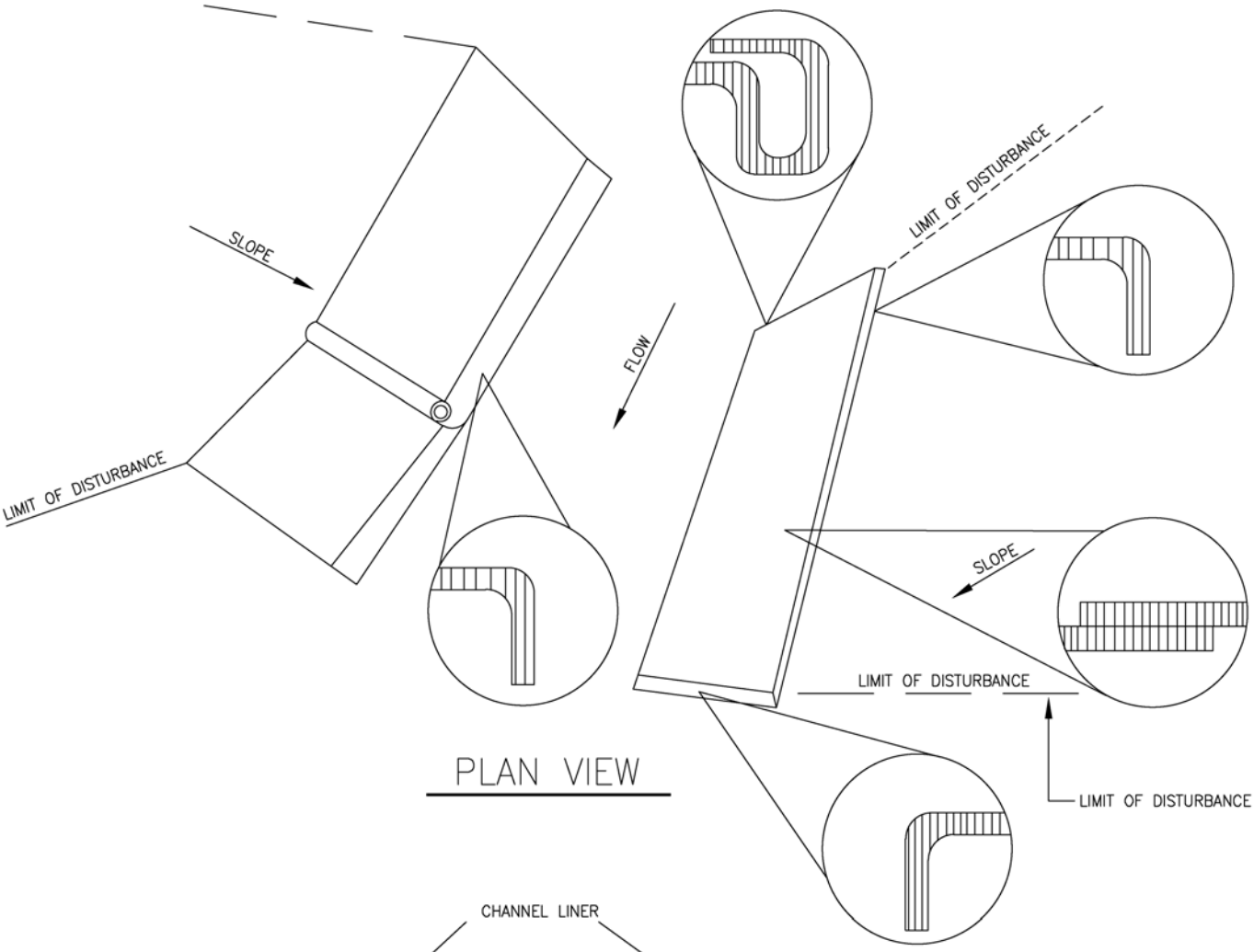

PLAN VIEW

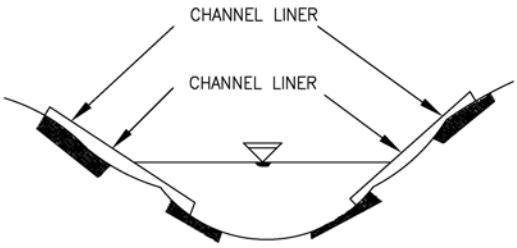

SECTION A–A

NOTES:

1. INSTALL AND ANCHOR LINERS FOLLOWING MANUFACTURER'S INSTRUCTIONS.
2. PREPARE SOIL BEFORE INSTALLING CHANNEL LINER, INCLUDING THE APPLICATION OF FERTILIZER AND SEED. CHANNEL LINERS SHOULD EXTEND COMPLETELY ACROSS DISTURBED BANK AREAS TO PROTECT ERODIBLE SURFACES.
3. BEGIN AT THE END OF THE CHANNEL BY ANCHORING THE LINER IN A TRENCH. BACKFILL AND COMPACT THE TRENCH AFTER STAPLING.
4. ROLL LINER IN DIRECTION OF WATER FLOW.
5. INSTALL LINERS END–OVER–END (SHINGLE STYLE) WITH OVERLAP USING A DOUBLE ROW OF STAGGERED STAPLES 4 INCHES BELOW THE FIRST ROW IN STAGGERED PATTERN.
6. IN HIGH FLOW CHANNEL APPLICATIONS A STAPLE CHECK SLOT IS RECOMMENDED AT 30 TO 40 FEET INTERVAOLS. USE A ROW OF STAPLES 4 INCHES BELOW THE FIRST ROW IN A STAGGERED PATTERN.
7. INSTALL CHANNEL LINER TO THE TOP OF DEFINED CHANNEL SECTION TO OR MORE ROWS OF BLANKETS MAY BE NECESSARY, THESE LINERS MUST BE OVERLAPPED 4 INCHES AND STAPLED.
8. THE CHANNEL LINER SHOULD EXTEND TO THE BASE OF THE CHANNEL AND STAPLED. FOR CHANNELS WITH VERY LITTLE OR NO FLOW, EXTEND A MINIMUM OF 1 FOOT BELOW WATER LEVEL AND STAPLE IN PLACE.
9. INSTALLATION SPECIFICATIONS TO BE MODIFIED AS NECESSARY TO SUIT ACTUAL SITE CONDITIONS.

BakkenLink Pipeline, LLC			
TYPICAL CONSTRUCTION FLEXIBLE CHANNEL LINER INSTALLATION			
DRAWN BY: PCS		CHK'D. BY: PCS	
DATE: 11–14–11		APPRV. BY: PCS	
DWG. NO. DETAIL–18			REV A

01–03–12 14:55 10045 1 EM z:\quintana\10045\working\civil\typicals\detail–18.dwg

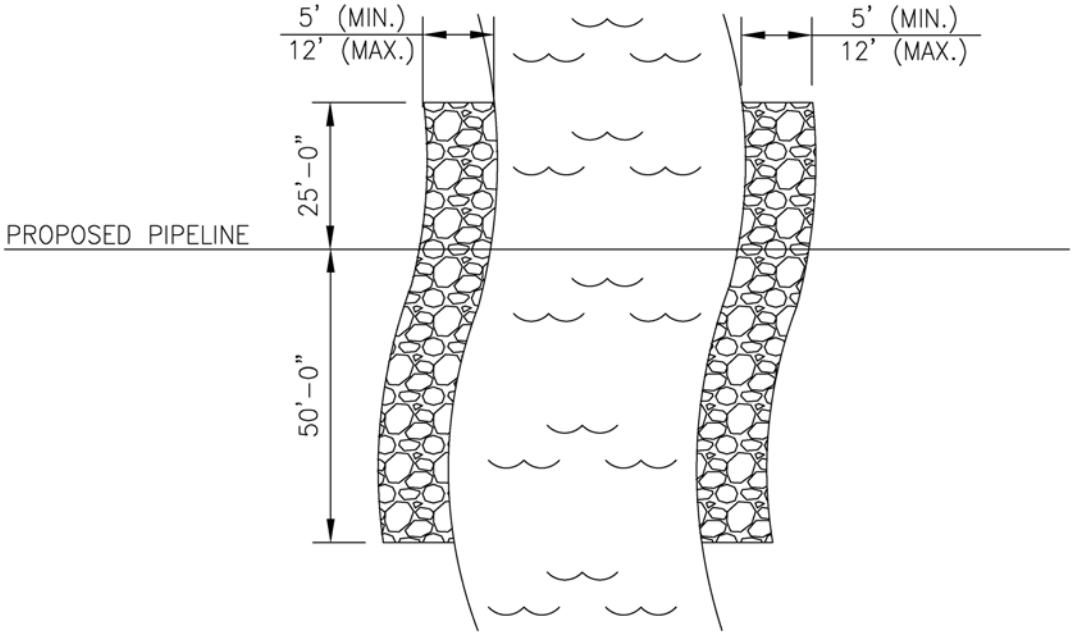

PLAN VIEW

N.T.S.

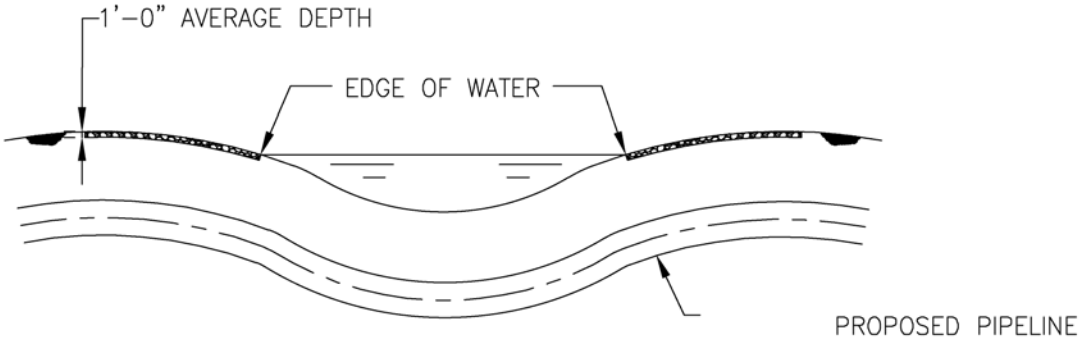

CROSS-SECTION

N.T.S.

NOTES:

1. RIP-RAP IS LESS THAN 500 FEET IN LENGTH.
2. RIP-RAP WILL NOT EXCEED AN AVERAGE OF ONE (1) CUBIC YARD PER RUNNING FOOT.
3. RIP-RAP INSTALLATION SHALL BE IN COMPLIANCE WITH ALL APPLICABLE PERMITS.

BakkenLink Pipeline, LLC	
TYPICAL CONSTRUCTION RIP-RAP PLACEMENT	
DRAWN BY: PCS	CHK'D. BY: PCS
DATE: 11-07-11	APPRV. BY: PCS
DWG. NO. DETAIL-19	REV A

z:\quintana\10045\working\civil\typicals\detail-19.dwg
01-03-12 14:56 10045 1 EM