Appendix 9.5

Memo on Lake Crossing Lowering Equipment, Experience and Planning

Project Memorandum

PCS Project No.	**10045**
Project	**Bakkenlink Pipeline Project**
Aspect	**Lake Sakakawea Crossing**
To	**Jarrett Davis**
From	**Terry Oram**
Subject	**Lake Crossing Lowering Equipment, Experience and Planning**

Submersible or slurry pumps are used by marine construction and diving groups to extract and/or relocate large volumes of seabed materials in a safe and controlled manner. The Toyo pump is one of the more commonly used and well known types of submersible pumps available to the marine construction industry for seabed material relocation solutions when diver operated air-lift equipment is inadequate. The pump is particularly effective when precise removal of materials is required in sensitive, confined and/or restricted locations.

The Toyo pump has been adapted and utilized to solve a wide range of subsea extraction and material transfer projects. The diversity of these applications and the importance of solving each situation in a timely manner provides evidence of the trust that international and domestic operators and contractors have of Toyo's effectiveness as a problem solving tool. Additional support for the Toyo pump is provided by the US Army Engineer Waterways Experiment Station document DRP 3-05 dated 1992 that reported on the results of full-scale field tests that "The Toyo pump performed the best overall and was only bettered by the Indian River Inlet educator when pumping wood debris". The reference to this report is made to illustrate the effectiveness of the Toyo pump in lifting and moving the type of soils that were found on the lake bottom and to the depth of the intended trench during the geotechnical investigations. In the report, sand, gravel, rip-rap, timber, plastic liners, aluminum cans were used as the "medium" for the trials. By comparison, the lake bed materials are more mundane and are described as *"The general soil profile consisted of lake sediment overlying alluvial soils. The lake sediment were encountered in four of the six borings and appeared to consist of 1 foot of "soil" that would classify as fat clay, however, the moisture content of the sediment was higher than the soils liquid limit. Therefore, this sediment was acting more as a fluid. Below the sediment, alluvial soils consisting of lean clay, silty sand, and poorly graded sand with silt and gravel were encountered. These alluvial soils are the native soils that were at this site prior to flooding of the lake. The cohesive portions of these soils generally were very soft to rather soft in consistency and the granular soils had a very loose to medium dense, relatively density"* Note 1.

Note 1

"Subsurface Evaluation for Bakkenlink Pipeline Crossing Lake Sakakawea, South of Tioga, North Dakota" by Braun Intertec Corporation

Lake Crossing Lowering, Equipment, Experience and Planning.

An unique aspect of dredging with the Toyo submersible pumps is the lack of turbidity. As the impeller rotates the slurry exits the pump discharge at a much higher velocity than the entry point. This creates a low pressure zone at the impeller eye and atmospheric pressure pushes more slurry into the pump. This is commonly referred to as the ability of the pump to create suction. In addition, the agitator directs flow away from the impeller creating an additional low pressure area between the agitator and the impeller. All the solids that are disturbed from their settled state are drawn into the low pressure area and through the pump - minimizing turbidity. Turbidity is further reduced due to the fact that the Toyo pump typically operates sub surface - below the mud line.

Most pipelines in the Gulf of Mexico (GOM) are lowered using jetting technology. In the jetting process, soils beneath the pipeline are fluidized with high pressure water and air-lifts remove the fluidized soil from beneath the pipe. As the jet sled is pulled forward, the pipeline astern of the sled settles into the jetted trench. Jetting has been used in the GOM since the 1950's after unburied pipelines were found to be susceptible to fishery operations and were unprotected during a storm events. The lowering of the pipeline with the top of pipeline three feet or more below the natural seabed, was introduced to protect and stabilize the pipeline and became a required standard by Bureau of Ocean Energy Management, Regulation and Enforcement (BOEMRE), for all new pipelines.

The concept of utilizing a submersible pump for lowering pipelines on a skid mounting straddling an installed pipeline is not new. Horizon Construction adapted a 1960's vintage conventional jet sled (see attachments) for use in the North East offshore environment. The design replaced the surface mounted jet pumps and compressors that are part of a normal marine jetting spread and concentrated the prime operating units at the immediate work area. The results from equipment trials prior to mobilization for the North East Gateway project offshore Boston proved the effectiveness of the new system.

The lack of marine equipment on Lake Sakakawea directed PCS to a pipe-pull methodology using a linear line pulling winch. With this winch mobilized and used to pull the pipeline across the lake, the use of the winch to progress a pipeline lowering sled and surface pontoons become the lake was reviewed. Each pipeline lowering project is unique and equipment is developed to solve the specific needs of the location, seabed conditions, environment and marine equipment availability. Utilizing experience gained from projects in Indonesia, Malaysia, Thailand and other locations where small sleds were utilized to lower pipelines using winches to progress the operation and divers to operate and monitor the progress, PCS developed a concept for a lighter model sled based on the seabed and environmental conditions and the lack of dedicated marine support and floating lifting equipment on Lake Sakakawea. Jeveler Construction Co. Inc. (Jeveler) has also developed a single Toyo sled unit (see attachments) that again minimizes the weight and subsequent transportation effort. Both designs will be reviewed and evaluated as the project progresses to construction with one of the designs being developed to a testing stage.

Lake Crossing Lowering, Equipment, Experience and Planning.

For the lake crossing, the pipeline trench length between the shorelines and outside the area lowered using land-based excavators is approximately 12,000 feet. The depth of trench is targeted for 6 feet. The width of the trench will vary (soil types) but is expected to be an 8 feet box cut with natural sloughing of the walls. This equates to an approximate 21,000 cubic yard trenching operation. Based on a conservative production rate of 250 cubic yards per hour (see report DRP 3-05) with an effective 10 hour day operation, the total duration is expected to be 9 days. The first pass is expected to lower the pipeline between 75% to 100% with subsequent lowering performed by divers if lowering is required in isolated locations or with another pass of the sled if extended sections require supplemental lowering. Rigging up for an additional pass of the sled will add approximately 2 days to the schedule to allow for relocation of the resources and rerunning the pull cable. The dive team will monitor the progress of the sled and the effectiveness of the operation. This monitoring will include increasing or decreasing the rate of travel as the lowering results are surveyed astern of the sled as the pipeline settles into the jetted trench. The divers will compare the natural lake bed (at an undisturbed offset) with the bottom of trench and top of pipe using depth (kluge) indicating hose or instrumentation similar to a C-Depth system (see attachments). Additionally, after the dive team has advised the Project Engineer that a section of the pipeline has been lowered to grade, a series of echo sounder cross sectional runs will be made at suitable spacing along the line by the Surveyors.

The pipeline applications for the Toyo pump over its 60 year plus life span are numerous and in some cases proprietary however some of its achievements are listed below:

1. Lowering of the shallow water section of a major 36-inch trunk line in the GOM in oyster bed areas (PCS was the Project Manager for this project)
2. Lowering of a 7,000 feet section of a 36-inch natural gas line in the GOM conducted under FERC jurisdiction (PCS personnel were part of the project team)
3. Used in the construction of a lowering tool as an alternative/back-up solution for several Atlantic seaboard pipeline projects (PCS was the Project Manager for this project)
4. Excavation of a pipeline trench adjacent to a producing trunk line in Sabah, Malaysia (PCS personnel were part of the project team)
5. Uncovering and exposing pipelines requiring repairs post Hurricane Rita (PCS was the Project Manager for this project)
6. Lowering of a 7,700 feet section of 30-inch natural gas pipeline displaced by a hurricane in the GOM under MMS jurisdiction (PCS personnel were part of the project team)
7. Maintenance of a dredged pipelines trench for a triple beach pulls in Sarawak, Malaysia (a PCS person was the Project Manager of this operation)
8. Lowering of several innershore pipelines in Taiwan. (PCS personnel were part of the project team)
9. Lowering of the innershore section of a 36-inch trunkline crossing the Tapti River in India (a PCS person was the Project Manager of this operation)

10. Lowering of multiple pipelines for a new pipeline crossing in the GOM (PCS personnel were part of the project team)
11. Excavation in the immediate shore crossing for an oil loading line at Map Ta Phut Thailand (a PCS person was the Project Manager of this operation)

For most of these pipeline projects, PCS personnel have played a senior role in either the design, the development of the application or the actual operation.

Jeveler Construction Co. Inc (Jeveler) is a Louisiana dredging contractor and equipment supplier that has participated and developed unique solutions to a wide range of subsea dredging projects using Toyo pumps. PCS has reviewed several projects with Jeveler and will most likely seek their input for the pipeline lowering of the Lake Sakakawea pipeline crossing. In addition to its participation in several of the named pipeline projects, Jeveler has a long list of non-pipeline accomplishments including the following where Toyo pumps were utilized:

1. Several large land developments in the Corpus Christi area (Padre Isles, Pelican Cove and Island Moorings).
2. Services in hazardous waste removal, wetland restoration, cofferdam dredging and other forms of environmental dredging. Our experience in moving materials has allowed us to modify the Toyo pumps to maximize their capabilities and minimize time and cost.
3. Dredging Contaminated Sediment - Along the bank of the Hylebos Waterway in Tacoma, Washington 32,000 cubic yards of contaminated sediment is being removed and treated, including some of the most dangerous chemicals in the Commencement Bay. The Toyo submersible dredge pump was specified as the preferred method of dredging due to the limited turbidity created when dredging as well as the high solids content when submerged in material. The treatment costs are considerable, so the focus is dredging at the highest solids content possible. Material is being pumped 2,000 feet to a treatment/dewatering process. The sediment is then trucked to a disposal site.
4. Wetland Restoration - This project was for marsh restoration near the mouth of the Neches River. A spoil disposal area was created from the dredging of a canal, a cooling water supply source for the power plant, was excavated down to natural marsh levels to create “coastal prairie” The excavated spoils were hauled to a centrally located pit, mixed with water from the canal to form slurry and pumped into the dead marsh area to form islands and higher elevations to promote growth of vegetation.
5. Filling Geotubes - beach stabilization project for NASA. 4,600 feet of 34’ circumference tubes filled up to 6’ in height with a medium grained sand. Excavators fed the sand to Javeler's hydraulic drive 75 hp submersible agitator pump which was placed in a 30' x 20' x 5' deep pit. The sand slurry was pumped through 2,300 feet of 8 inch HDPE pipe to fill the geotubes.

The following articles and brochures are attached to demonstrate the versatility and effectiveness of the Toyo pump that will be primary lowering tool for the Lake Sakakawea pipeline crossing

Lake Crossing Lowering, Equipment, Experience and Planning.

Attachments:

1. Alternative Pipeline Dredge Assembly (by Jeveler)
2. Javeler 75 converted Toyo pump (by Jeveler)
3. Toyo pumps incorporated in a jet sled (for NE application)
4. Description of the lowering the 7000 feet of 36-inch pipeline
5. Dredging Research Technical Notes (DRP-3-05)
6. Electronic Diver Depth Monitoring System

Revision 0
PCS 10045
October 18, 2011

ALTERNATIVE PIPELINE DREDGE DESIGN

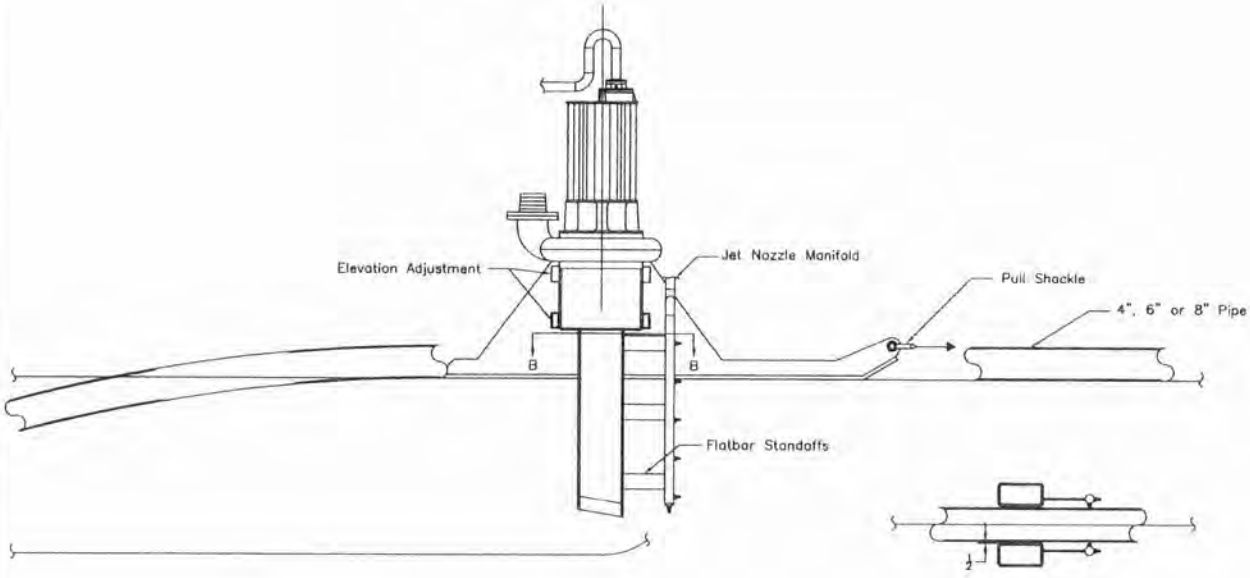

Elevation – Section A–A

Plan – Section B–B

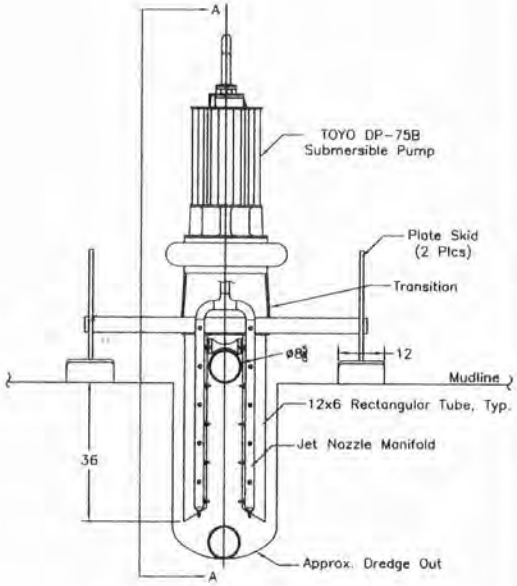

Elevation – View from Front

NOTES
Concept Drawing

ENGR RECORD	DATE	Javeler Construction	
		Pipeline Dredge Assembly	
DRAWN BY: RG	3/08		
CHECKED BY:		JOB NO.:	
APP. BY:		DRAWING NO.:	
APP. BY:			SHEET: 1 OF 3
SCALE: NTS			REV NO.: 0

THIS CONTENT OF THIS DOCUMENT IS THE PROPERTY OF JAVELER CONSTRUCTION AND MAY NOT BE REPRODUCED OR DISCLOSED TO OTHERS WITHOUT JAVELER CONSTRUCTION'S WRITTEN CONSENT.

JAVELER 75 CONVERTED TOYO PUMP

Javeler 75 - Serious Excavation

Submersible Dredge Pump System with 8" Discharge

The 75 is designed to move high volumes of material with controlled discharge in rugged offshore conditions. With Javeler's knowledge and experience there is no better way to move the earth.

SPECIALIZED DREDGING & EQUIPMENT

It's more than a pump; it's how Javeler makes it work.

EXPERIENCE: Javeler offers more than just excavation equipment. For over 40 years, Javeler has continually provided innovative dredging solutions around the world from the Gulf of Mexico to the North Sea.

24 HOUR SUPPORT: Get it when you need it. Our commitment ensures the work gets done quickly and correctly. Javeler has backup systems to ensure minimal loss of productivity.

FIELD PERSONNEL: Experienced technicians available for on-site assistance to make your job easier. All offshore personnel are TWIC, SafeGulf, Water Survival and CPR certified.

8" Discharge

75 PUMP SPECIFICATIONS

	Electric	Hydraulic
Discharge	8 inch	8 inch
Motor	75 hp	up to 150 hp
Capacity	1600 gpm	up to 2500 gpm
Head	96 feet	up to 170 feet
Production (based on free flowing sand)	75-150+ cy/hour	75-180+ cy/hour
Power Source	175 kw generator	HPU
Reel	static cable reel	hydraulic hose reel
Maximum Depth	150 feet	850+ feet (Greater depths with ROV)

*Pressure compensated for depths greater than 150 feet. A 75 hydraulic is also available for depths up to 150 feet

DIMENSIONS & WEIGHTS

	Electric	Hydraulic
Pump	6'H x 4'W x 3'D 2500 lbs.	6'H x 4'W x 3'D 2200 lbs.
Transport Skid (pump included)	13'L x 4'W x 5'H 4200 lbs.	6'L x 4'W x 8'H 3500 lbs.
Power Source	13'L x 4'W x 8'H 8600 lbs.	12'L x 5'W x 8'H 10,000 lbs.
Hydraulic Hose Reel	N/A	9'L x 7'W x 8'H 10,000 lbs.

OPTIONAL EQUIPMENT

Jetting
Multiple jetting options.

Discharge Hose
Available with or without floats.

HDPE Pipe
8" or 10" SDR 17

Jet Hose Reels
Up to 850' capacity.

Power Generation
Hydraulic Power Units & Electric Generators

Job Storage
8'x10' portable workshops equipped with tools and spare parts.

Transport Basket
24'L x 8'W x 3'H Makes transportation & handling safe & easy.

APPLICATIONS:

Deepwater Dredging	Well-Site Excavation
Offshore Dredging	Platform Abandonment
Decommissioning	Pipeline Burial/Retrieval
Salvage	Internal Pile Excavation
P&A Excavation	Jack Up Leg Excavation

Javeler

4406 Hwy 14, New Iberia, LA 70560 | 337-364-5841 | www.javeler.com

TOYO PUMPS INCORPORATED IN A JET SLED

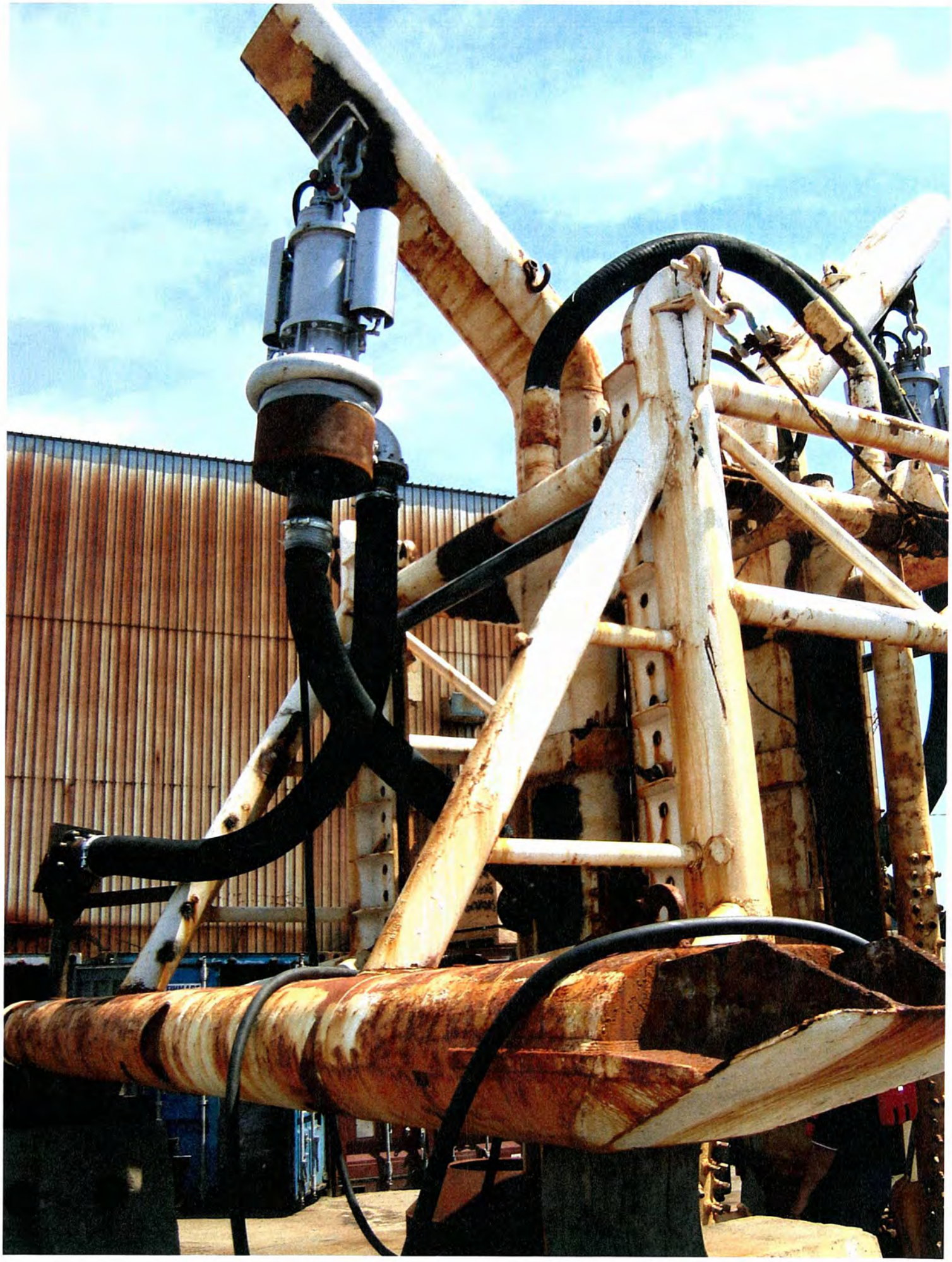

LOWERING OF 7000 FEET OF 36-INCH PIPELINE

BP Pipeline Bury Project Summary

Oct 06

BP had to bury 7,000' of exposed 36 inch natural gas pipeline (10 miles offshore - Destin pipeline) with 6 feet of cover. The initial attempt to bury the pipe was with a Rotech 8000, but there were difficulties controlling the movement and placement of the sugar sand.

Chet Morrison was prime contractor with spud barges "Dolly" and the "14". Water depth of 15 feet.

Javeler rigged up two electric DP 150B pumps (8,000 lbs each), to straddle the pipe and bury it. The operation was carried out while the pipeline was under pressure and flowing natural gas.

One barge carried all the equipment and backups, including generators and jet pumps, along with the crane to maneuver the twin dredge pump system. The second barge was outfitted with a second crane for handling the discharge lines and to house personnel.

The twin 150B dredge pump system was held in the vertical position at all times. Pumps were lowered (straddling the pipeline) and sand pumped through two separate floating 10 inch discharge lines approximately 200 feet away. The twin dredge pump system was continually raised and lowered, moving along the pipe, swinging in a 90 degree arc before barge was repositioned. Prior to repositioning, the dredge system was used to sweep the trench to excavate to grade. The pipeline lowered itself into the trench after excavating about 150 foot length.

An ROV was used to profile the pipe. Positioning was controlled via GPS and digging depth was monitored by metering the cable and sling. A tag line ran from the dredge pumps to a kevel on the deck of the barge.

Jetting was accomplished using a jet pump feeding water into the saddle, then branched off through 4 inch lines to each jet ring on the DP 150B pump. The saddle also had jets pointing inward.

Dredging activities lasted 2.5 weeks (single shift). ROV sweep revealed no damage to the pipeline coating.

Destin Pipeline
Intracoastal Waterway
10,000 Feet
G U L F O F M

DREDGING RESEARCH TECHNICAL NOTES (DRP-3-05)

DRP-3-05
May 1992

Dredging Research Technical Notes

Controlled Tests of Eductors and Submersible Pumps

Purpose

This technical note summarizes a series of full-scale tests on the US Army Engineer Waterways Experiment Station (WES) Dredging Research Program (DRP) eductor, a commercial eductor, and two commercial submersible pumps. The note covers test equipment, material, and procedures used to evaluate the performance of the eductors and submersible pumps in clean sand and a variety of debris types. Information provided will assist personnel in selecting equipment for specific dredging and sand bypassing applications.

Background

Eductors (jet pumps) are hydraulic pumps with no moving parts, relying instead on an exchange of momentum to entrain the slurry (Richardson and McNair 1981). Eductors have been used for sand bypassing at inlets since the early 1970s with varying degrees of success. Improvements in increased debris resistance and ease of deployment and retrieval were identified as items needed to make eductor sand bypassing more widely applicable, and resulted in the DRP work unit Improved Eductors for Sand Bypassing.

Additional Information

For additional information contact the authors, Mr. James E. Clausner, (601) 634-2009, Mr. Timothy L. Welp, (601) 634-2083, or Mr. Darryl Bishop, (601) 634-3004, or the manager of the Dredging Research Program, Mr. E. Clark McNair, Jr., (601) 634-2070.

Note: The contents of this technical note are not to be used for advertising, publication, or promotional purposes. Citation of trade names does not constitute an official endorsement or approval of the use of such products.

US Army Engineer Waterways Experiment Station
3909 Halls Ferry Road, Vicksburg, MS 39180-6199

PRINTED ON RECYCLED PAPER

Description of Eductors and Submersible Pumps Tested

Through a series of contracts, the DRP eductor was designed, constructed, and tested. Some of the design features (Figures 1 and 2) include a smooth cylindrical outer shape to prevent debris (logs and sticks) from jamming in the eductor and making retrieval difficult, a series of fluidizing nozzles around the perimeter of the tip to fluidize the sand for removal and to allow heavy debris to sink below the eductors, a grate over the entrance to prevent debris from entering the suction chamber, and a ring jet to reduce pullout forces.

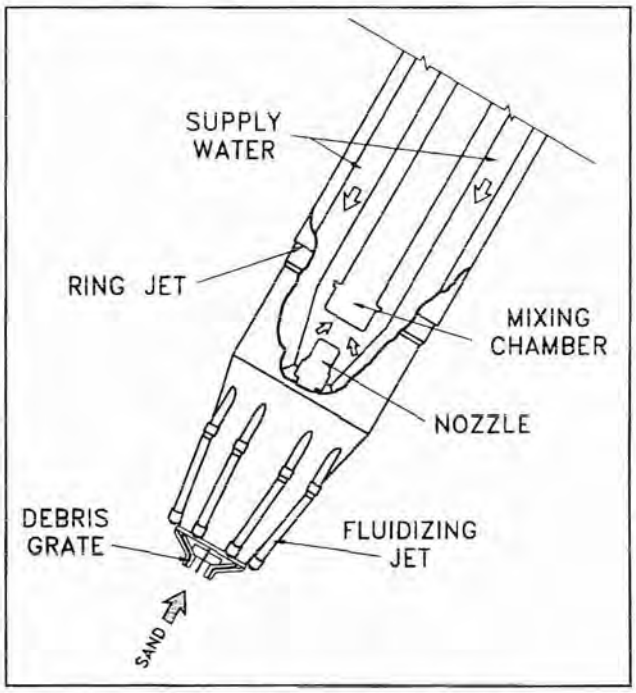

Figure 1. Schematic of DRP eductor

Figure 2. DRP eductor

As a baseline comparison, the eductor used at the Indian River Inlet, Delaware, Sand Bypass System also was tested; see *Dredging Research Technical Notes* DRP 3-03 (Clausner 1990a) for additional details. This eductor, built by Standard Gravel of Franklinton, Louisiana, has the same basic hydraulics as the DRP eductor. However, this eductor has a simple suction duct and a linear manifold of fluidizing nozzles (Figures 3 and 4). The Indian River Inlet eductor has been used successfully for over two years, bypassing over 150,000 cu yd before the test date (by January 1992 the bypass system had transferred over 200,000 cu yd). Testing of the Indian River Inlet eductor provided an excellent standard against which to compare the DRP eductor.

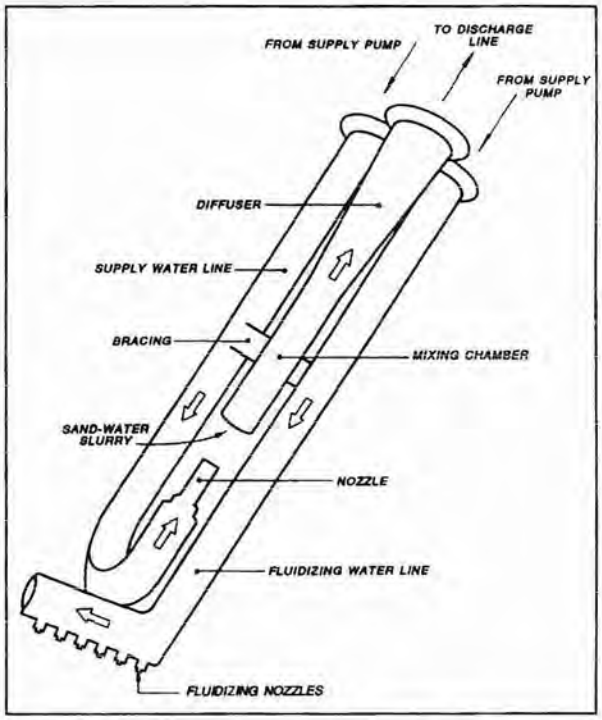

Figure 3. Schematic of Indian River Inlet eductor

Figure 4. Indian River Inlet eductor

Another facet of the Improved Eductor work unit is to investigate alternatives to eductors with submersible pumps being a likely alternative (Clausner 1990b). Consequently two submersible pumps were included in the testing program. The first pump tested was an H&H model PF50 x 8P 8-in. hydraulically powered submersible pump with a 75-gallon per minute (gpm) (M76 x 5.0) hydraulic motor (Figure 5). The final pump tested was a Toyo DP-150B electrically

Figure 5. H&H PF50 by 8P submersible pump

powered, 10-in. submersible pump (Figure 6). Table 1 summarizes the characteristics of the eductors and submersible pumps tested.

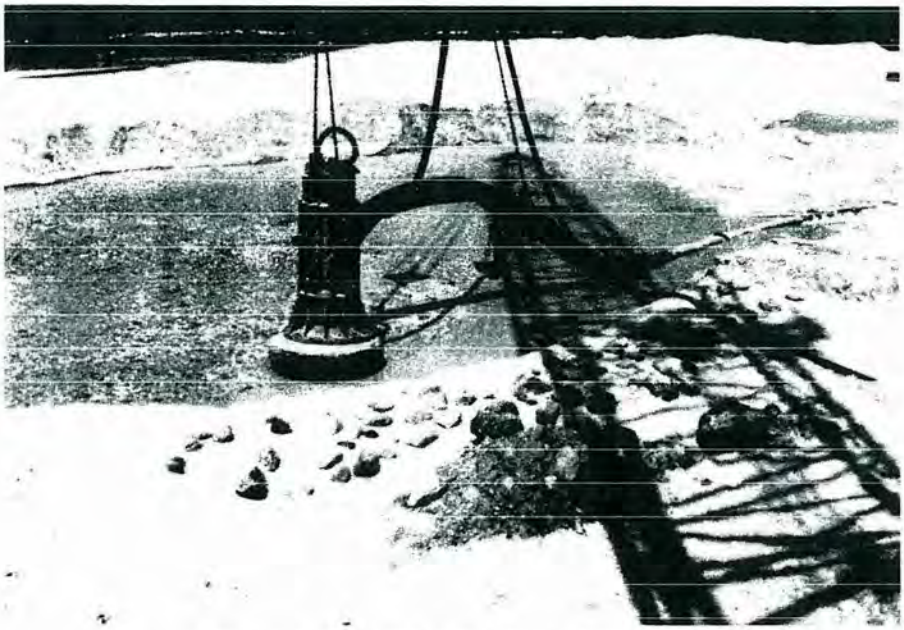

Figure 6. Toyo DP150B submersible pump

Table 1
Eductors and Submersible Pumps Tested*

Item/ Manufacturer	Physical Characteristics	Power Source Characteristics	Average Horsepower Consumed
DRP Eductor/ Genflo Standard Gravel Company	20-ft-long, 9,000-lb, mixer, 6-in. discharge pipe, 10 in. long	450-hp diesel, pump, 3,300 gpm at 155 psi	300
Indian River Inlet Eductor/ Genflo - Standard Gravel Company	20-ft-long, 3,500-lb, mixer, 6-in. discharge pipe, 10 in. long	450-hp diesel, pump, 3,300 gpm at 155 psi	300
H&H Model PF 50 x 8 with 20 percent chrome and nickel inlay	3-ft-long, 3-ft-wide, 724-lb, max. spherical solid, 4-in. discharge pipe, 8 in. long	275-hp diesel, hydraulic pump, 75 gpm at 2,000 psi	150
Toyo DP-150B high chrome pump with external agitator	8-ft-long, 3-ft-diameter, 8,000-lb, max. spherical solid, 4-1/2-in. discharge pipe, 10 in. long	300-hp diesel, generator	150-200

* The last column is an estimate of the horsepower required from each power source by each pump during operation. The eductors only require about a 300-hp diesel for actual operation. The H&H pump used is normally supplied with a 150-hp power source; the larger unit used was only one available at the time of the test. The Toyo pump requires a high starting horsepower, but only consumes 150-200 hp during operation.

Test Location

The tests were conducted at Standard Gravel Company's Enon, Louisiana, gravel pit (approximately 65 miles north of New Orleans). The availability of support equipment and electrical power and the relatively close proximity to the US Army Engineer Waterways Experiment Station (WES) made this site attractive. This site was selected because it also closely simulates applicable conditions at coastal bypassing locations.

Test Layout and Equipment

The test location has a large area of clean sand (mean diameter, 0.3 mm, less than 5 percent fines) in excess of 25 ft thick that could be saturated to simulate sand bypassing at a coastal location. The test site setup was nearly identical for both the eductor and submersible pump tests (Figure 7). The site encompassed an area approximately 300 by 450 ft and had a portable building where instrumentation used to monitor performance and archive test data was housed. Table 2 gives characteristics of the pumps used during the tests. A large crane (110-ton, 100-ft-long boom) was used to deploy the eductors and submersible pumps. A 3-cu yd backhoe, an 18-ton boom crane, and a bulldozer were also used to move pipe, grade sand, and perform other operations.

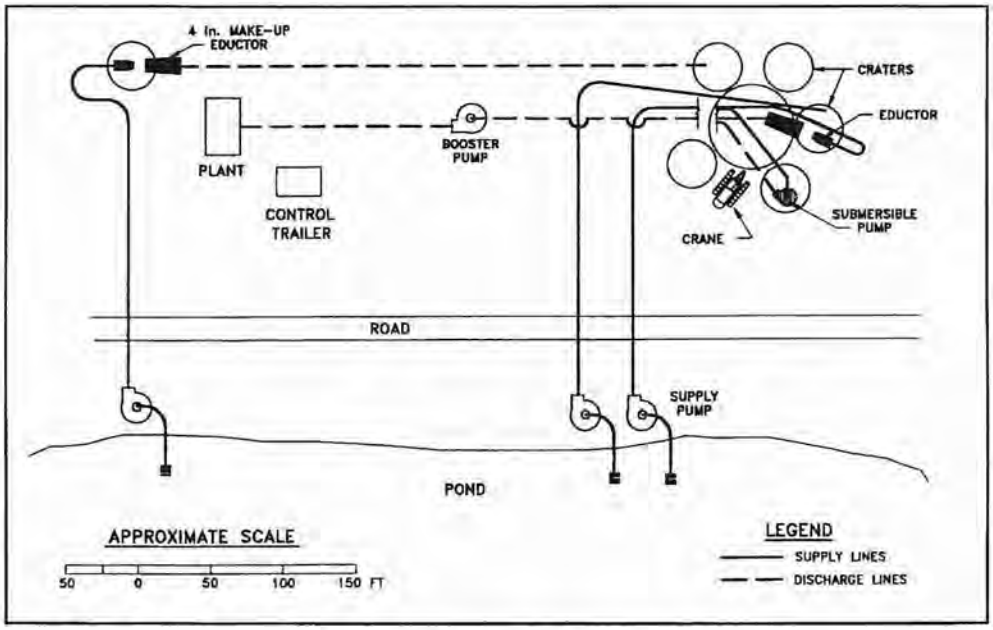

Figure 7. Test site configuration

Table 2
Water Pumps Used during Tests

Equipment	Horsepower	Flow Rate, gpm
Makeup water to crater	250	3,000
Inline booster	180	3,300
Supply pump for return eductor	180	1,500

Conditions at coastal sites were simulated by saturating the crater test area. This was done by pumping water to the crater before and during tests at a rate sufficient to keep the crater filled with water.

During the eductor tests, motive water to the eductors was provided by a supply pump from an adjacent pond through a 10-in. ID steel pipeline about 250 ft long. Slurry dredged by the eductors and submersible pumps flowed through an 11-in. ID high-density polyethylene (HDPE) pipeline to a booster pump. Discharge from the booster pump went through a 10-in. steel pipeline to a processing plant (classification tower with a 1-1/2 in. square grid grizzly), which was used to separate debris from the sand. The 30-ft tower minus the 10-ft drop in elevation from the booster pump to the bottom of the tower resulted in a 20-ft vertical lift. Sand separated by the processing plant was recycled back to the primary test area using a 4-in. eductor powered by a separate supply pump.

Instrumentation included pressure gages on the discharge side of the supply pump, at the inlet to the booster pump, and on the discharge side of the booster pump. A nuclear density meter and doppler flow meter were mounted on the vertical section of pipe attached to the processing plant. Pressure data, slurry velocity, slurry percent solids (by weight), and production (cubic yards per hour) were displayed and recorded on a personal computer after passing through a signal-conditioning unit. The hardware and software used to collect the data were originally developed under DRP work unit Production Meter Technology. For this test, the software was expanded considerably to allow display and user-friendly operation. WES Instrumentation Services Division developed the software and the signal-conditioning unit and installed the pressure transducers. Overall, the data collection system worked extremely well, with data being collected every 10 sec during the tests.

A video camera aimed at the test crater was used to document each test. A second video camera was focused on the computer screen as a backup in case of failure by the computer to record the test data.

Test Procedures

Pressure transducers were calibrated before testing (calibrations were stored in the computer) and the nuclear density meter was equalized daily (a two-hour warmup period). Predetermined motive water pump and booster pump pressures were established before the eductor test trials, as was the booster pump pressure for the submersible pump test trials. Each unit's production capacity was tested in "clean" sand and in sand-debris combinations for a 30-min duration of continuous performance in each test. Three separate trials were conducted for each combination in almost every case. For a limited number of cases only two runs were made.

The crane was used to deploy the eductor or submersible pump and reposition it as needed during each trial. The same crane operator was

used for all the tests conducted with different types of pumps and debris combinations. The debris combinations were laid on clean sand in a random pattern within a radius of approximately 15 ft around the point of application of the pump. As the unit excavated sand, the debris would "fall" into the crater. This method was used because debris in sand bypassing operations is encountered in a similar manner.

During the trial, when a substantial drop in percent solids was observed, the pump was lifted from the crater bottom and swung to the left or right approximately 5 ft and then set back on the bottom. This kept the pump in the debris field yet allowed it to possibly clear itself. During the stone debris trials it was observed that stones too large to enter the pump would accumulate in the bottom of the crater and form a barrier between the pump and sand, thus reducing production rates. The repositioning of the pump would allow it to excavate sand on the fringes of the consolidated barrier and pump slurry at higher rates until the process repeated itself. A video camera recorded the pump in the crater during the trial and documented debris accumulation at various locations (at the grizzly, in the booster pump stone box, or pump suction duct).

Under certain conditions, the submersible pumps could acquire slurry at very high percent solids concentrations (sometimes exceeding 60 percent solids by weight). At this point the discharge line was susceptible to being plugged if a slope cave-in temporarily choked the pump or if the pump momentarily lost power. At these times the operator would raise the submersible pump 1 or 2 ft to reduce solids concentrations. It was not always possible to give the operator sufficient notice to prevent plugging the line.

At the completion of each test with debris combinations, the crater area would be contaminated by debris that was too large to be transported by the system or that did not come into contact with the pump. Because of this, the contaminated area was surveyed by conventional methods, its position logged, and it was not used again. The flexible plastic HDPE pipe allowed the pumps to be redeployed in uncontaminated areas immediately adjacent to the previous debris trial.

The sand and debris combinations consisted of the following materials:

- Clean sand with a mean diameter of 0.3 mm and less than 5 percent fines.
- 16 cu ft of cut wood that varied in length from 1 to 3 ft with the diameters varying from 1 to 6 in. Before the tests, the wood pieces were soaked in water to produce a negative buoyancy which caused them to sink to the bottom of the crater during the trial.
- 16 cu ft of stone riprap ranging in size from 2 in. to 18 in. with a mean diameter of 7 in.

- 60 garbage-bag sized plastic liners (weighted with sand) and 15 "swim fins" fabricated from 3/4 in., 4-ply conveyor belt cut into 9- by 24-in. rectangular pieces.
- Aluminum beverage cans (punctured to sink). About 500 were tested in one jet pump trial with no apparent effect on production (minute pieces of shredded cans were observed at the grizzly) so the use of this debris was discontinued.
- Kelp. Kelp was donated by the San Diego Parks and Recreation Department, but the test runs with this debris were discontinued due to the kelp's increasing rate of deterioration and negligible effect on production rates. Had fresh kelp been available, it likely would have had a measurable impact on production.

In addition to the debris tests, the DRP eductor was tested for ease of deployment and retrieval. The deployment tests consisted of measuring the time required to sink the unit to a depth of 18 ft using only the fluidizing jets. By modifying the fluidizing jets so that the rear two jets pointed back toward the deployment frame with the remaining jets pointed straight down, the unit sunk to design depth in 90 sec.

During the retrieval tests, the deployment frame was removed to allow the eductor to sink vertically into the sand a distance of 18 to 20 ft. Then a series of pull tests were done with the crane acting through an inline load cell. Variables tested included the amount of time the unit was allowed to sit and the active assistance of the three hydraulic units — the fluidizing jets, the ring jet, and the eductor itself. Pullout loads ranged from 34,000 lb to 10,000 lb. The most important factor in keeping pullout forces to a minimum was allowing the sand around the whole unit to become fully fluidized, thereby reducing skin friction and preventing a vacuum. This was accomplished by operating the eductor and blocking the discharge line, and/or using the ring jet or fluidizers. The higher flows achieved by blocking the eductor discharge line (so all the water exits the open end of the eductor) provided the quickest saturation of the sand. However, the other two methods also were effective. It was concluded that the ring jet was not needed.

Results and Discussion

Sixty-one tests were conducted, with 48 of the tests meeting the WES criteria of 30 min of continuous performance. The average production rates for each set of tests are contained in Table 3. The DRP eductor and the Indian River Inlet eductor had very similar performance in clean sand, about 350 cu yd/hr. As expected, performance was reduced substantially in debris. The DRP eductor was measurably better in stone (244 versus 203 cu yd/hr) and garbage bags and swim fins (215 versus 186 cu yd/hr). The Indian River Inlet eductor was superior in wood (322 versus 269 cu yd/hr).

Table 3 Test Results Summary		
Equipment Tested	**Debris Type**	**Average Production Rate, cu yd/hr**
DRP eductor	Sand	355
	Stone	244
	Garbage bags and swim fins	215
	Wood	269
Indian River Inlet eductor	Sand	346
	Stone	203
	Garbage bags	186
	Wood	322
H&H submersible pump	Sand	221
	Stone	84
	Garbage bags and swim fins	188
Toyo submersible pump	Sand	375
	Stone	403
	Garbage bags and swim fins	322
	Wood	241

Of the two submersible pumps, the Toyo pump had consistently higher production in clean sand and all types of debris, while the H&H pump had the least amount of production of any unit tested. It should be noted that the H&H pump was an 8-in. pump, while the eductors and Toyo pump were 10 in. Had a 10-in. discharge coupling that attached directly to the pump housing been available for the H&H pump, an increase in production rate of up to 15 percent probably would have been possible (personal communication, Mr. Howard Stovall, Vice President, H&H Pump Company, January 24, 1992). This potentially would have raised production rates for the H&H pump to 254, 97, and 216 cu yd/hr in sand, stone, and garbage bags and swim fins, respectively. The H&H pump was more prone to plugging of the discharge line than any of the other units tested, having three instances where the line was plugged. A considerable amount of operator attention to raising and lowering the H&H pump to achieve maximum production and prevent plugging of the discharge line was required.

The Toyo pump was a much larger, heavier unit than the H&H pump. It also is much more expensive. Purchase price for the Toyo pump as tested was estimated at $73,300. The purchase price of the 8-in. H&H pump was approximately $15,300. The Toyo pump had the highest overall production of any unit tested, over 400 cu yd/hr. The improved production in stone versus sand was probably due to the operator gaining experience with the Toyo pump. The garbage bags and swim fins had an appreciable impact on production, reducing it to 322 and 241 cu yd/hr, respectively. The Toyo pump also was very sensitive to operator control, with relatively constant raising and lowering of the unit required to maintain high production and prevent plugging of the discharge line.

Conclusions

In clean sand, performance of the DRP eductor and the more conventional Indian River Inlet eductor are about the same. Performance in debris was a function of the type of debris. The grate on the DRP eductor keeps out stone and garbage bags/swim fins better than the Indian River Inlet eductor; however, the grate is more prone to clogging with wood. The Indian River Inlet eductor is more susceptible to stones entering into the suction chamber, thereby reducing performance.

The H&H pump in its present form is not well suited to the types of debris tested. It is very susceptible to both rocks and wood. A rock guard, relatively easily fabricated (and also available from the manufacturer), could help solve these problems, though probably reducing performance somewhat.

The Toyo pump performed the best overall and was only bettered by the Indian River Inlet eductor when pumping wood debris.

The lack of a requirement for constant operator control and the relative immunity to line plugging make the eductors well suited to long-term bypass operations. The choice of a particular eductor will depend on the type and amount of debris present. The Toyo pump's high production and apparent ruggedness make it a possible candidate for bypass operations (particularly those not suited for eductors), but the level of operator control required to achieve the high production rates and the potential for line plugging must be considered. The H&H pump's low cost and light weight (approximately 724 lb) make it well suited for smaller, aperiodic bypass and dredging jobs.

The Vicksburg District's Monroe Navigation Field Office used similar logic before purchasing a lightweight submersible pump to maintain locks and dams on the Red River. For small aperiodic dredging jobs, the purchase price can be a more important factor than production rate.

A detailed description of the tests will be published in a future DRP report.

Acknowledgements

The DRP acknowledges the cooperation of the following companies and agencies: H&H Pump Company, Toyo Pump Company, Javeler Construction Company, Delaware Department of Natural Resources and Environment Control, Standard Gravel Company, and the San Diego Parks and Recreation Department.

References

Clausner, J. E. 1990a. "Fixed Sand Bypassing Plant — an Update," *Dredging Research Technical Notes* DRP-3-03, US Army Engineer Waterways Experiment Station, Vicksburg, MS.

Clausner, J. E. 1990b. "Submersible Pumps for Sand Bypassing," *Dredging Research*, Vol DRP-90-3, US Army Engineer Waterways Experiment Station, Vicksburg, MS.

Richardson, T. W., and McNair, E. C., Jr. 1981. "A Guide to the Planning and Hydraulic Design of Jet Pump Remedial Sand Bypassing Systems," Instruction Report HL-81-1, US Army Engineer Waterways Experiment Station, Vicksburg, MS.

C-DEPTH

C-Tecnics
subsea electronics

C-DEPTH

VIDEO SYSTEMS & CONTROL SYSTEMS

Highly accurate Electronic Diver Depth monitoring system for up to Three Divers

The C-Depth 3 has been developed for electronic diver depth monitoring in Lightweight Diving Operations rather than using a pneumatic diving control panel. The system is ideal to give the Supervisor a surface read-out whilst air diving using tethered scuba diving, which utilises a rope or rope/comms line.

The C-Tecnics Electronic Pneumo System comprises a surface display indicating water depth, a power and signal cable from the surface to the operator/diver, and a highly accurate pressure transmitter. Three depths can be monitored simultaneously. The display meters feature push button switches for calibration of the unit prior to deployment, this allows for adjustments in ambient pressure when working at altitude for example in a lake or river.

The standard cables supplied are 75m in length, but longer are available. The small size of the transmitter allows it to be easily diver mounted for depth monitoring or hand-held as a bottom profiling device.

C-DEPTH SPECIFICATION

Dimensions

Surface Unit Exterior Dimensions (L x W x H)	299 x 248 x 195mm
Transducer Dimensions (L x Diameter)	125mm x 16mm

Electrical

Transducer Signal	4 – 20mA
Surface Unit	12vDC Rechargeable Battery
Battery Life	4 hours

Range

Depth Range	0-100m

Casing

Two press and pull latches, Double layered soft grip handle, Two padlockable hasps,
Vortex Valve, Lightweight Strong HPX Resin & Watertight

C-Tecnics, 123 Ashgrove Road West, Aberdeen, AB16 5FA
Sales: +44 (0)1224 666 322 e: info@c-tecnics.com w: www.c-tecnics.com