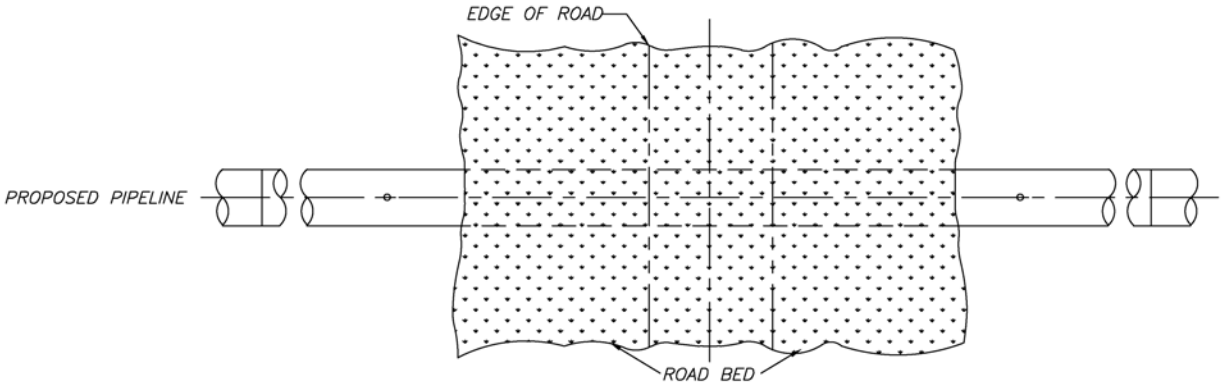

PLAN VIEW

NOT TO SCALE

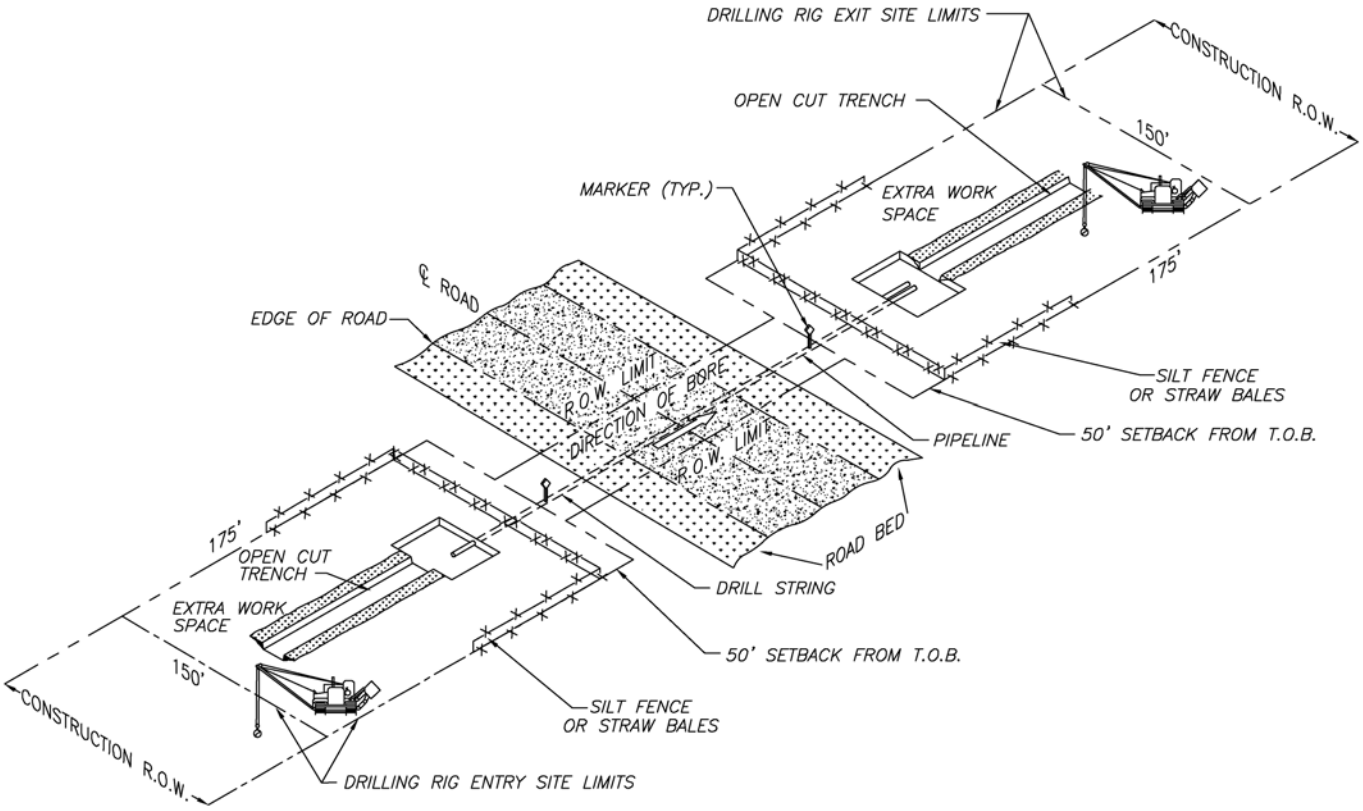

PLAN VIEW 'A'

NOT TO SCALE

NOTES:

1. EXTRA WORK SPACE NOT LOCATED IN WETLAND WHEN POSSIBLE AND PRACTICAL.
2. RIGHT-OF-WAY LIMITS FOR WETLAND AND UPLAND ARE 100' AND 120' RESPECTIVELY.
3. WORK AREA WILL BE TEMPORARILY MATTED FOR MARSH AREAS.

BakkenLink Pipeline, LLC	
TYPICAL CONSTRUCTION BORED ROAD CROSSING	
DRAWN BY: PCS	CHK'D. BY: PCS
DATE:	APPRV. BY: PCS
DWG. NO. DETAIL 40-A	REV A

z:\quintana\10045\working\civil\typicals\detail-40-a.dwg
01-03-12 13:20 10045 1 EM

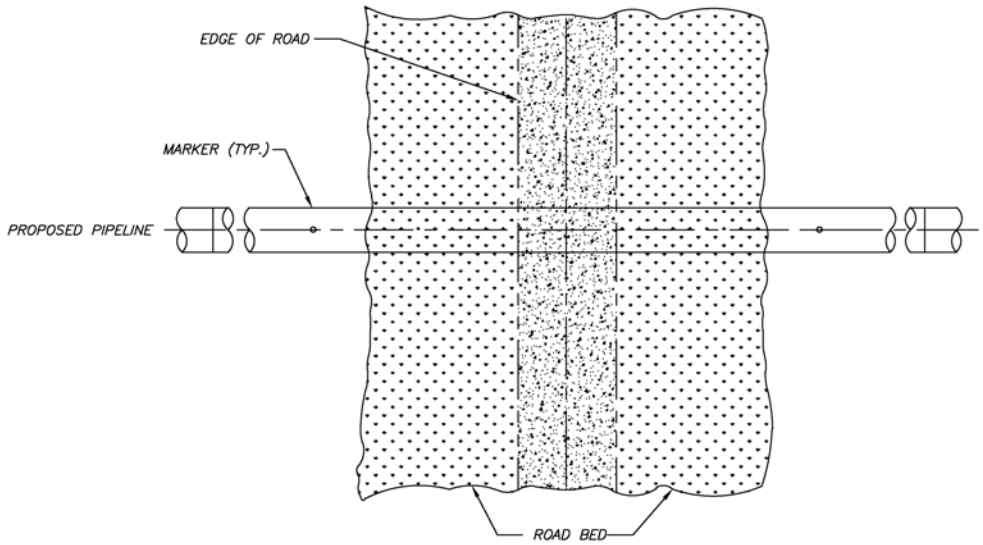

PLAN VIEW

NOT TO SCALE

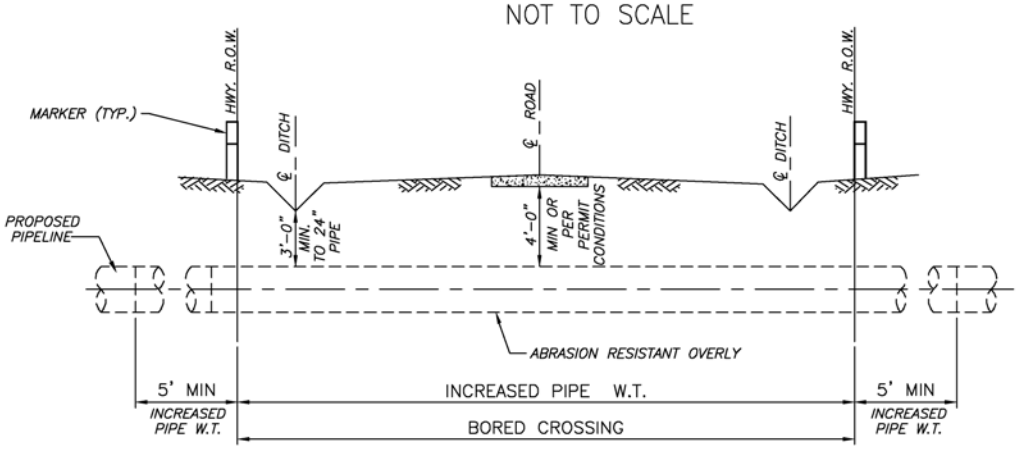

PROFILE

NOT TO SCALE

NOTES:

1. CROSSING INSTALLATION SHALL BE IN ACCORDANCE WITH APPLICABLE PERMIT.
2. BORED CROSSINGS SHALL BE ACCOMPLISHED VIA SLICK, HAMMER OR AUGER METHODS.
3. ALL CARRIER PIPE SHALL BE ERW, CARBON STEEL PIPE, EXTERNALLY COATED WITH FUSION BONDED EPOXY AND ABRASION RESISTANT OVERLAY.
4. ALL GIRTH WELDS SHALL BE INSPECTED PER API-1104 SPECIFICATIONS.
5. ALL LONGITUDINAL SEAMS SHALL BE MILL INSPECTED PER API-5L SPECIFICATIONS.
6. CARRIER PIPE DIAMETER, WALL THICKNESS, AND GRADE SHALL BE SPECIFIED ON THE ALIGNMENT SHEET DRAWINGS.
7. COMPANY SUPPLIED WARNING SIGNS SHALL BE INSTALLED.
8. USE OF BORE OR HDD CROSSING WILL BE DETERMINED UPON COMPLETION OF DETAIL SURVEY.

BakkenLink Pipeline, LLC	
TYPICAL CONSTRUCTION BORED ROAD CROSSING	
DRAWN BY: PCS	CHK'D. BY: PCS
DATE:	APPRV. BY: PCS
DWG. NO. DETAIL 40-B	REV A

z:\quintana\10045\working\civil\typicals\detail-40-b.dwg 1 EM 10045 13:23 01-03-12

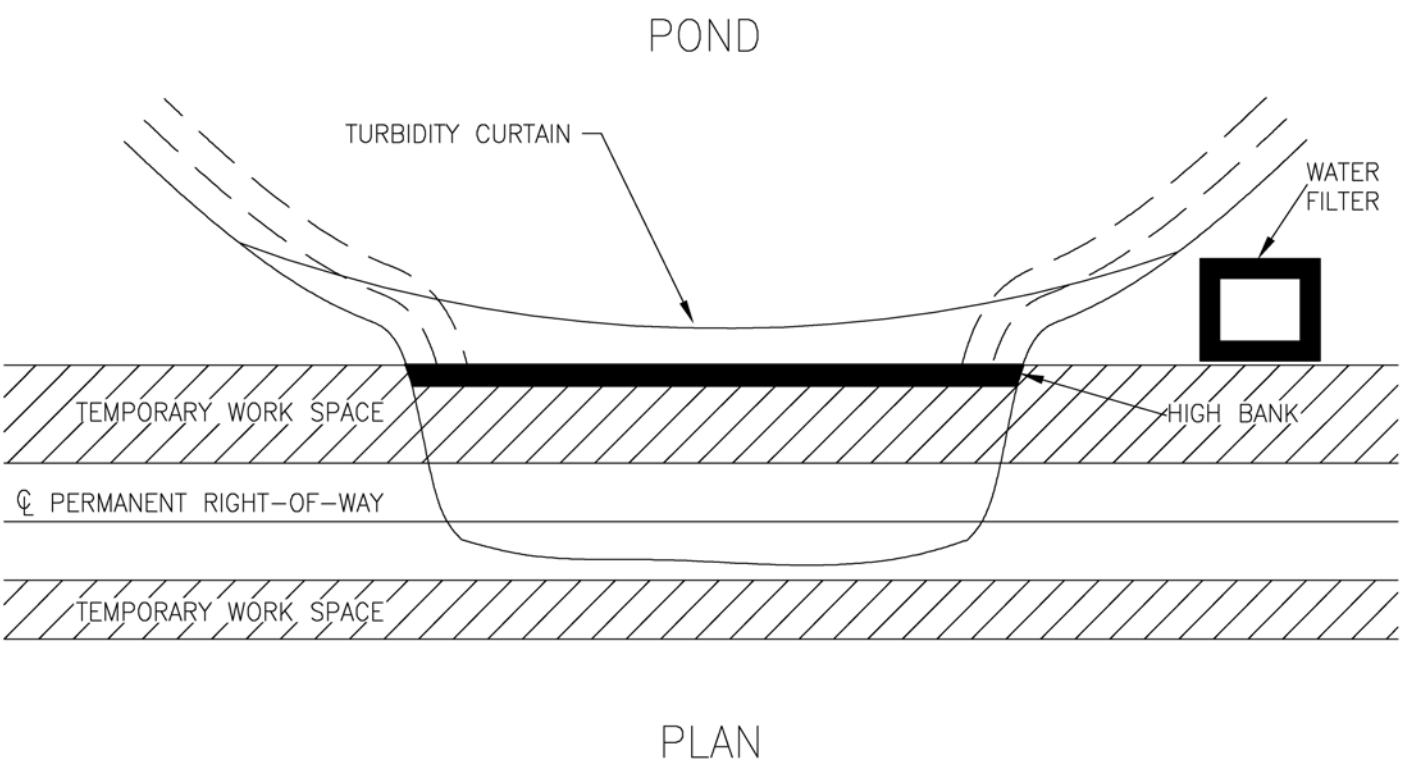

THE INITIAL APPROACH TO ANY POND CROSSING WILL BE ATTEMPT TO OBTAIN PERMISSION FROM THE LAND OWNER AND TO HAVE THE LAND OWNER LOWER THE POND WATER TABLE TO AN ELEVATION BELOW THE CONSTRUCTION WORK SPACE SO NORMAL PIPE LAY CAN BE CONDUCTED THROUGH THE AREA. IF AN AGREEMENT CANNOT BE REACHED. THE FOLLOWING METHOD WILL BE USED:

TYPICAL POND CROSSING WILL CONSIST OF THE INSTALLATION OF AN EARTH DAM OR PORTABLE WATER DAM TO BE INSTALLED FROM HIGH BANK TO HIGH BANK. A TURBIDITY CURTAIN WILL BE USED TO PREVENT SEDIMENTATION FROM SPREADING THROUGHOUT THE POND AREA. THE WATER WITHIN THE CONSTRUCTION WORK AREA WILL BE PUMPED OVER INTO A WATER FILTER STRUCTURE AND ALLOW TO FLOW NATURALLY BACK INTO POND. THE WATER TABLE WITHIN THE WORK AREA WILL BE LOWERED TO A SAFE WORKING ELEVATION. ONCE PIPELINE INSTALLATION IS COMPLETE, ALL DAM MATERIAL WILL BE REMOVED AND POND RESTORED TO ITS PREVIOUS WATER TABLE ELEVATION AND CONDITIONS.

NOTES:

1. CONSTRUCT EARTH OR PORTABLE WATER DAM.
2. INSTALL TURBIDITY CURTAIN.
3. PUMP WATER OUT OF WORKSPACE INTO WATER FILTER STRUCTURE.
4. TURBIDITY CURTAIN AND WATER FILTER AREA WILL BE AGREED UPON BY LANDOWNER.

BakkenLink Pipeline, LLC			
TYPICAL CONSTRUCTION FOR POND ENCROACHMENT			
DRAWN BY: PCS		CHK'D. BY: PCS	
DATE:		APPRV. BY: PCS	
DWG. NO. DETAIL 41			REV A

z:\quintana\10045\working\civil\typicals\detail-41.dwg
01-03-12 13:24 10045 1 EM

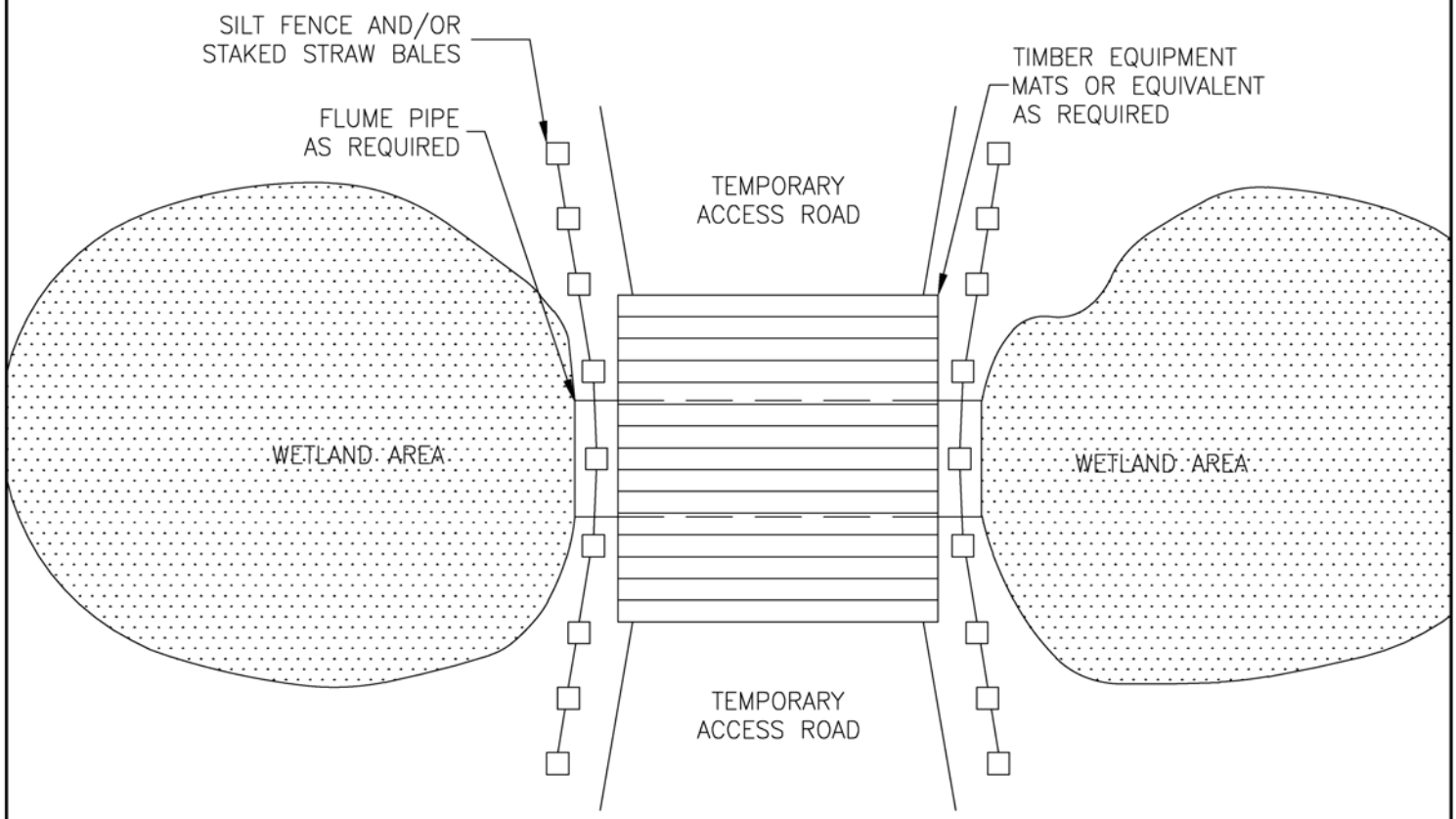

PLAN VIEW

NOT TO SCALE

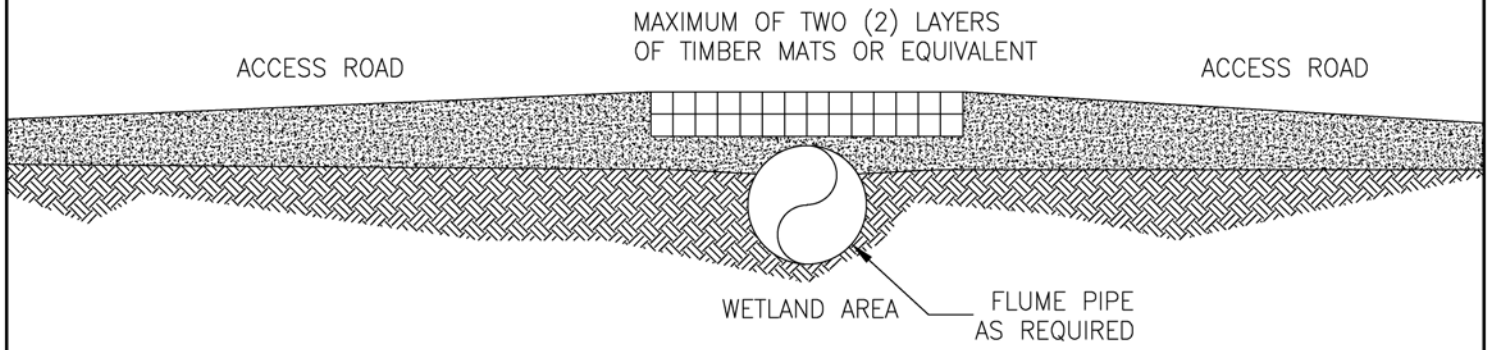

CROSS SECTION

NOT TO SCALE

BakkenLink Pipeline, LLC	
TYPICAL CONSTRUCTION WETLANDS ACCESS ROAD	
DRAWN BY: PCS	CHK'D. BY: PCS
DATE:	APPRV. BY: PCS
DWG. NO. DETAIL 42	REV A

z:\quintana\10045\working\civil\typicals\detail-42.dwg 1 EM 10045 13:41 01-03-12

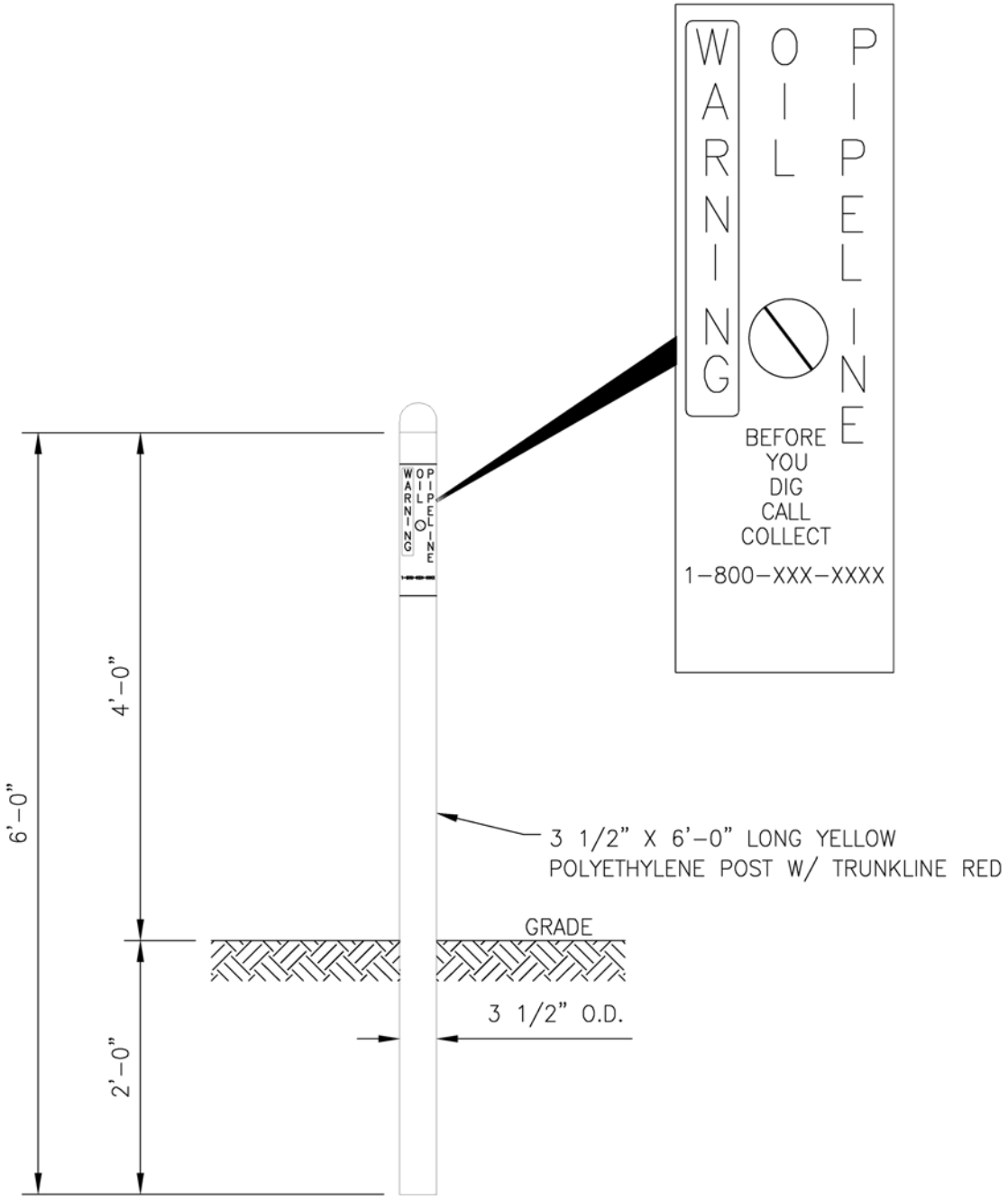

ELEVATION

PIPELINE MARKER TYPE 1

BakkenLink Pipeline, LLC	
TYPICAL CONSTRUCTION PIPELINE MARKER TYPE 1	
DRAWN BY: PCS	CHK'D. BY: PCS
DATE:	APPRV. BY: PCS
DWG. NO. DETAIL 43	REV A

z:\quintana\10045\working\civil\typicals\detail-43.dwg 01-03-12 13:44 10045 1 EM

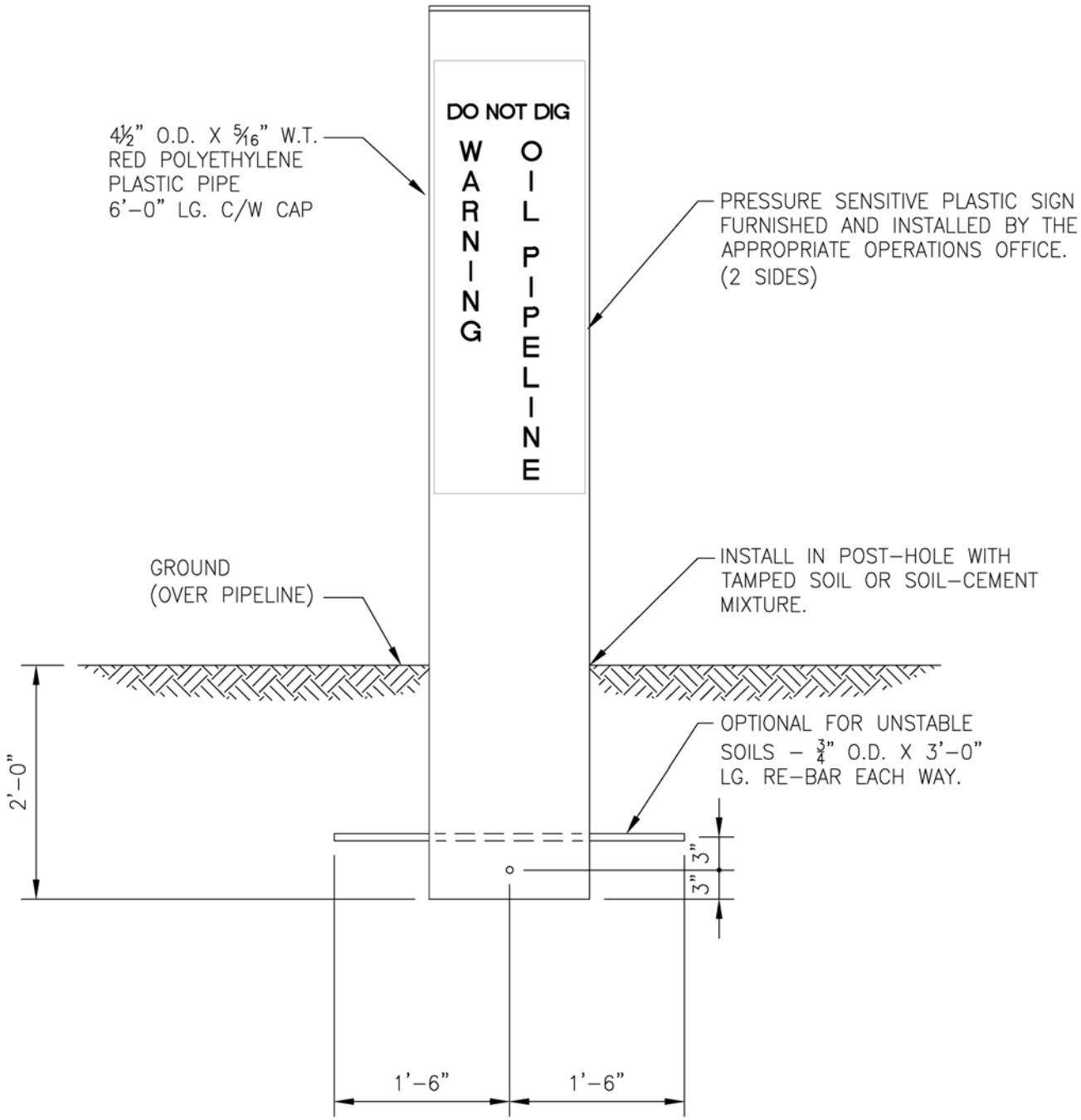

BakkenLink Pipeline, LLC	
TYPICAL CONSTRUCTION PIPELINE MARKER TYPE 2	
DRAWN BY: PCS	CHK'D. BY: PCS
DATE:	APPRV. BY: PCS
DWG. NO. DETAIL 44	REV A

01-03-12 13:46 10045 1 EM z:\quintana\10045\working\civil\typicals\detail-44.dwg

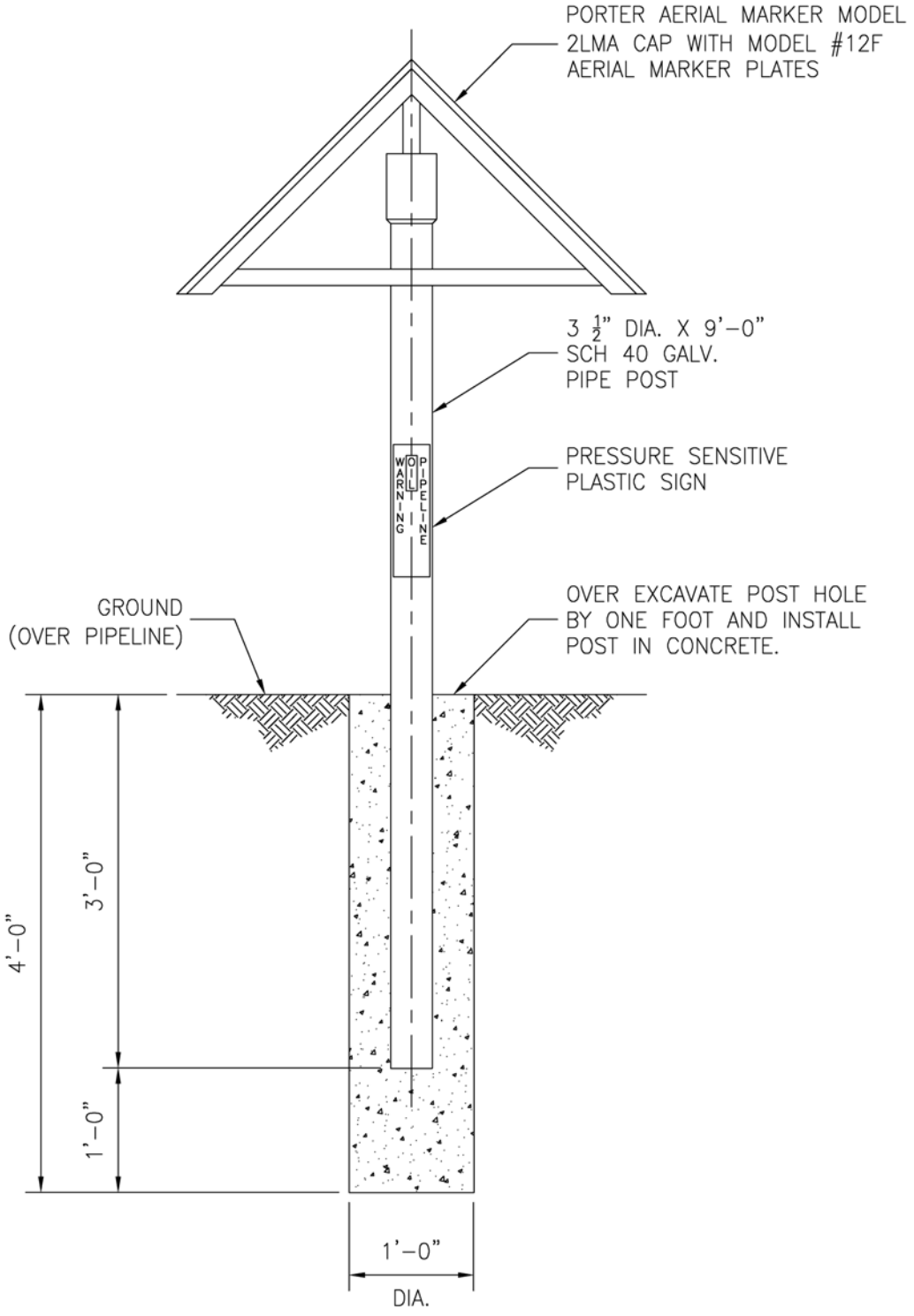

NOTES:

1. AERIAL MARKERS SHALL BE LOCATED AS DIRECTED BY INSPECTOR.

BakkenLink Pipeline, LLC

TYPICAL CONSTRUCTION
PIPELINE AERIAL MARKER

DRAWN BY: PCS	CHK'D. BY: PCS
DATE:	APPRV. BY: PCS
DWG. NO. DETAIL 45	REV A

z:\quintana\10045\working\civil\typicals\detail-45.dwg
01-03-12 13:48 10045 1 EM

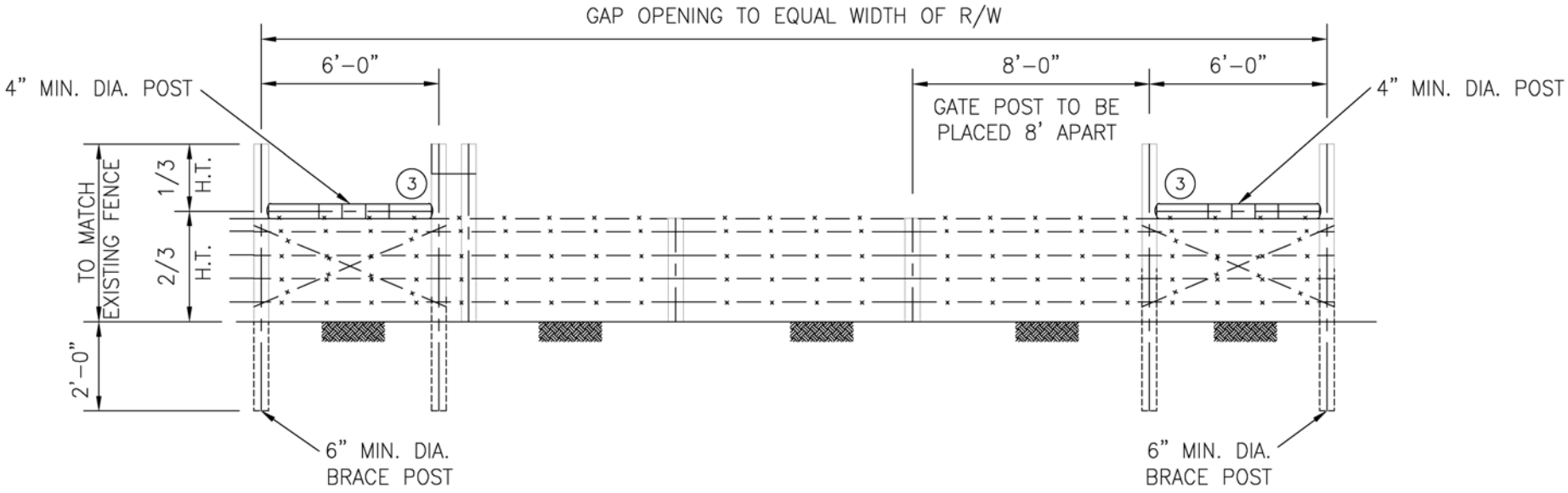

NOTES:

1. INSTALL BRACE POSTS AND SECURE FENCE BEFORE CUTTING EXISTING WIRES. REPLACEMENT FENCE TO BE EQUAL OR BETTER THAN EXISTING FENCE. ALL POST AND WIRE TO BE FURNISHED AND INSTALLED BY CONTRACTOR.
2. ALL POST TO BE ROUND WOODEN POSTS, CUT AND MANUFACTURED FROM LIVE, SOUND, AND GROWING TREES AND SHALL BE SOUTHERN YELLOW PINE, RED (NORWAY) PINE, WHITE PINE, OR JACK PINE, PRESSURE TREATED WITH PENTACHLOROPHENOL PRESERVATIVE. UNTREATED CEDAR POSTS MAY BE USED.
3. CATCH OFF OF FENCE STRETCHER TO BE PLACED THIS SIDE OF BRACE POST BEFORE CUTTING FENCE WIRE. CUT WIRE TO BE SECURED TO BRACE POST BY WRAPPING AROUND POST.

BakkenLink Pipeline, LLC	
TYPICAL CONSTRUCTION FENCE BRACE POST DETAIL	
DRAWN BY: PCS	CHK'D. BY: PCS
DATE:	APPRV. BY: PCS
DWG. NO. DETAIL 46	REV A

z:\quintana\10045\working\civil\typicals\detail-46.dwg 01-03-12 13:50 10045 1 EM

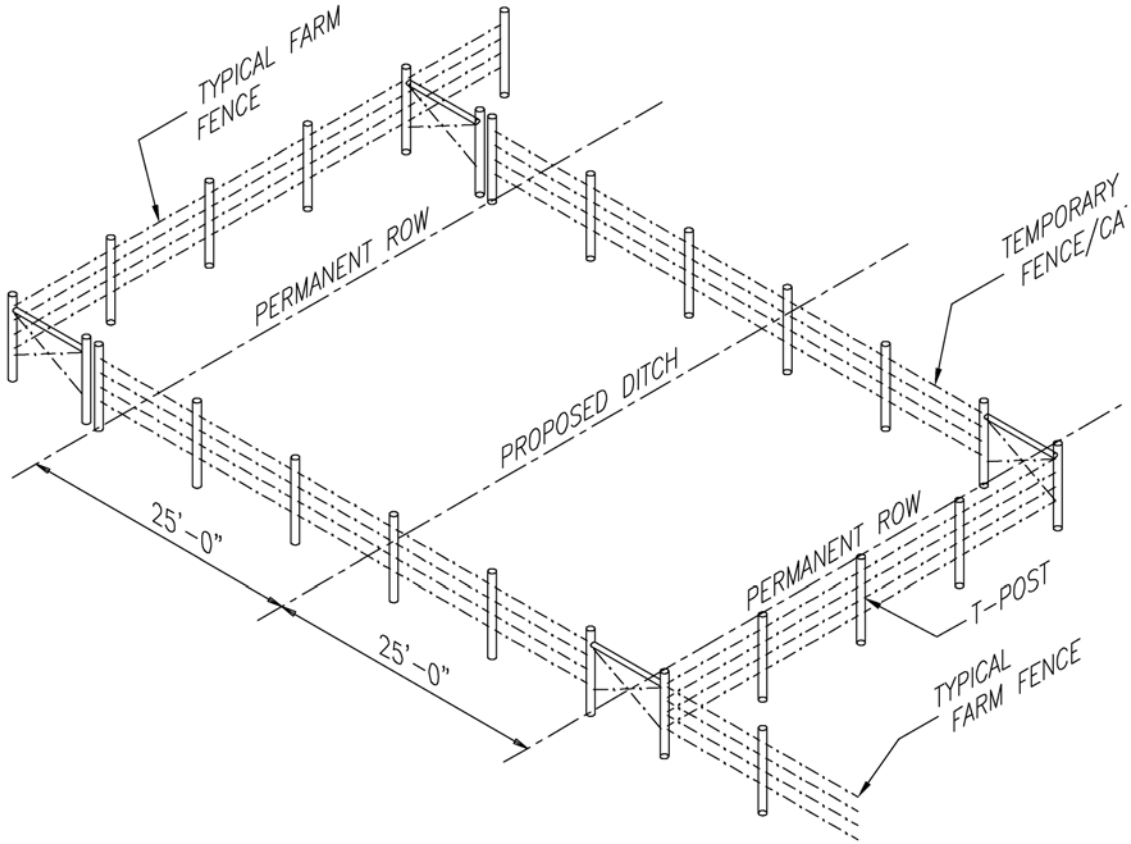

BakkenLink Pipeline, LLC

TYPICAL CONSTRUCTION
TEMPORARY FENCE ALONG R.O.W.

DRAWN BY: PCS	CHK'D. BY: PCS
DATE:	APPRV. BY: PCS
DWG. NO. DETAIL 47	REV A

01-03-12 13:51 10045 1 EM z:\quintana\10045\working\civil\typicals\detail-47.dwg