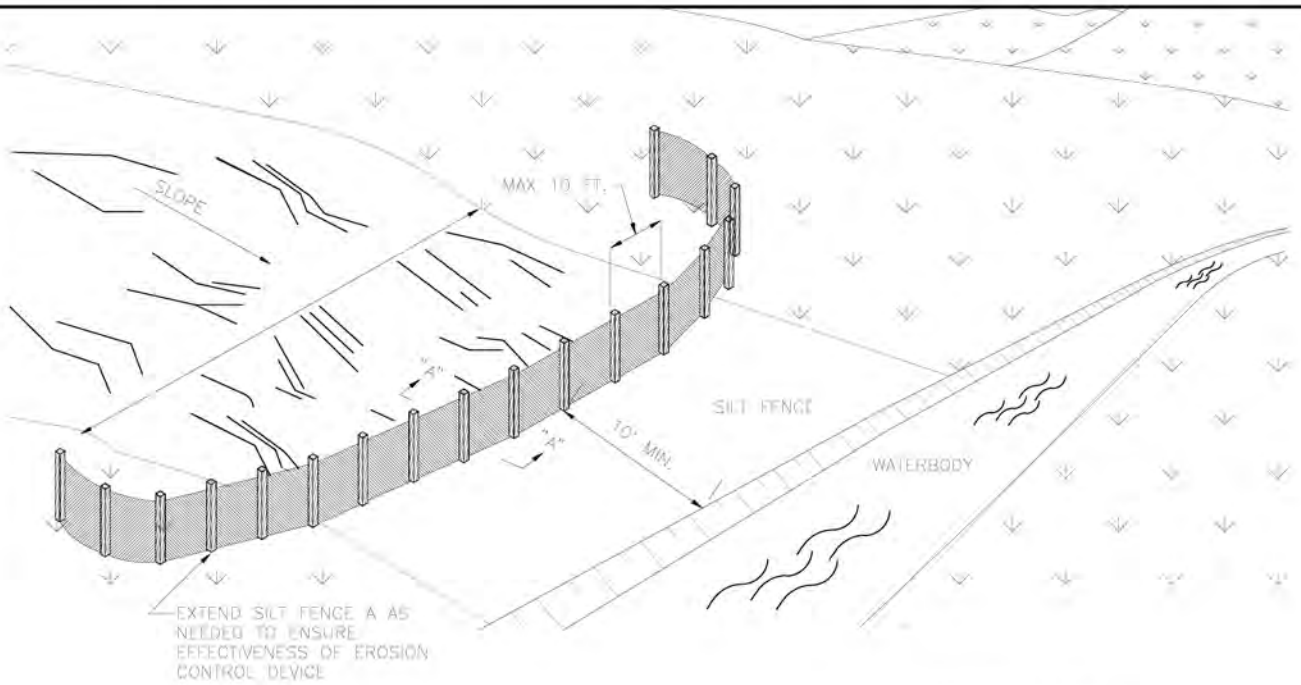

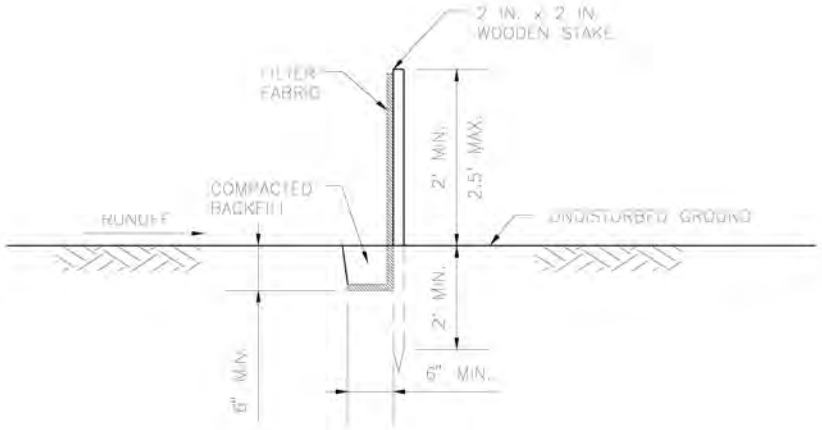

SECTION–"A"–"A"
SCALE: NOT TO SCALE

NOTES:

1. SILT FENCES ARE TO BE USED IN AREAS WHERE SHEET FLOW OR RELATIVELY SMALL VOLUMES OF WATER CAN BE EXPECTED TO OCCUR. FOR LARGER VOLUMES SUCH AS WITHIN A DEFINED CHANNEL, A CHECK DAM WILL BE REQUIRED.
2. STAKES ARE TO BE PLACED A MAXIMUM OF TEN (10) FT. OR CLOSER AS CONDITIONS REQUIRE.
3. ATTACH FILTER FABRIC AT EACH POST AT A MINIMUM OF THREE (3) LOCATIONS.
4. THE FILTER FABRIC (MIN. OF 1 FT.) IS TO BE ANCHORED IN A 6 INCH X 6 INCH TRENCH WITH WELL COMPACTED BACKFILL OVER THE FABRIC TO PREVENT UNDERMINING.
5. TO ELIMINATE POSSIBLE END FLOW, BOTH ENDS OF THE SILT FENCE SHALL BE TURNED AND EXTENDED UPSLOPE.
6. SILT FENCES ARE TO BE CHECKED AND MAINTAINED ON A REGULAR BASIS. REMOVE ANY BUILD UP OF SEDIMENT WHEN THE HEIGHT OF SEDIMENT EXCEEDS APPROXIMATELY 20% OF THE HEIGHT OF THE BARRIER.
7. MATERIAL SHOULD BE WOVEN GEOTEXTILE FABRIC SUCH AS EXXON GTF 180 OR MOBILE 600X, OR AN APPROVED EQUIVALENT. SECONDARY REINFORCEMENT SUCH AS A CONSTRUCTION BARRIER FENCE OR WIRE MESH CAN ALSO BE USED BEHIND THE FILTER FABRIC.
8. WHERE ANCHORING CONDITIONS FOR THE SILT FENCE ARE POOR, PLACE ANCHORED STRAW BALES ON DOWNSTREAM SIDE OF THE SILT FENCE.
9. MAITAINANCE REQUIREMENTS:
   INSPECT SILT FENCE:
   - DAILY IN AREAS OF ACTIVE CONSTRUCTION
   - WEEKLY IN AREAS OF NO CONSTRUCTION
   - WITHIN 24 HOURS FOLLOWING MAJOR RAIN EVENT
   - REPAIR OR REPLACE SILT FENCE AS NEEDED
   - REMOVE ACCUMILATED SEDIMENTS TO AN UPLAND AREA AS NEEDED

BakkenLink Pipeline, LLC

TYPICAL CONSTRUCTION
SILT FENCE
BARRIER INSTALLATION

DRAWN BY: PCS	CHK'D. BY: PCS
DATE: 11-07-11	APPRV. BY: PCS
DWG. NO. DETAIL-1	REV A

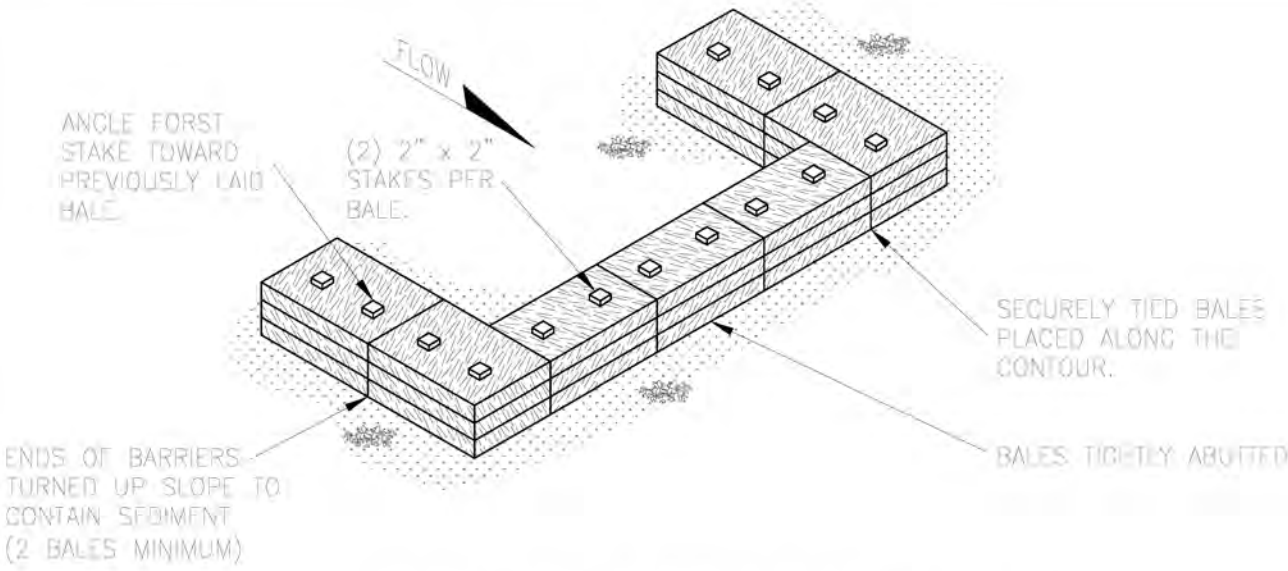

PERSPECTIVE VIEW

NOT TO SCALE

INSTALLATION REQUIREMENTS:

WHEN USING STRAW BALES, PLACE THEM:

- WITH THEIR ENDS TIGHTLY ABUTTING AND EMBEDDED IN THE SOIL A TYPICAL OF 4".
- BETWEEN DISTURBED AREAS AND DOWN-SLOPE ENVIRONMENTAL RESOURCE AREAS.
- AT THE BASE OF ALL SLOPES NEXT TO WETLANDS, WATERBODIES, AND ROAD CROSSINGS.
- AT THE INLET AND OUTLET OF OPEN DRAINAGE STRUCTURES.
- APPROXIMATELY 6 FEET BEYOND THE TOE OF THE SLOPE TO GIVE THE SEDIMENT ROOM TO COLLECT.

KEY IN THE BOTTOM OF THE BALE. IN AREAS WHERE IT IS NOT FEASIBLE TO TRENCH IT IN (LEDGES, ROCKY SOIL,LARGE TREE ROOTS, ETC), USE NATIVE SOIL AS BACKFILL UP-SLOPE OF THE BALE.

IF USED IN CONJUNCTIION WITH SILT FENCE, BALES ARE PLACED UP-SLOPE OF THE SILT FENCE AND DO NOT NEED TO BE TRENCHED IN.

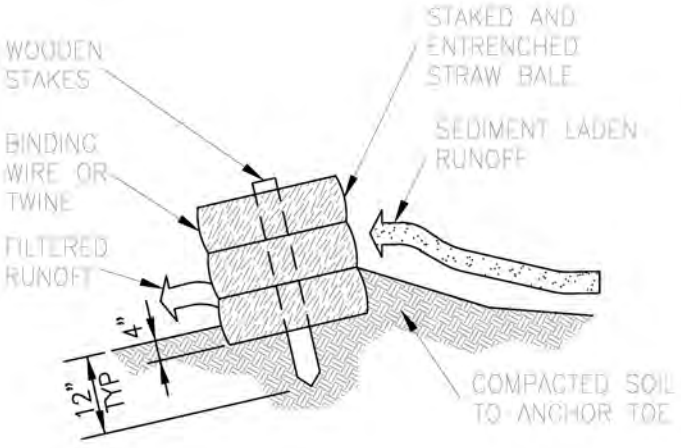

CROSS-SECTION

NOT TO SCALE

MAINTENANCE REQUIREMENTS:

INSPECT BALES:

- DAILY IN AREAS OF ACTIVE CONSTRUCTION.
- WEEKLY IN AREAS WITH NO CONSTRUCTION.
- WITHIN 24 HOURS FOLLOWING EACH MAJOR STORM EVENT.
- REPAIR OR REPLACE BALES AS NEEDED.
- REMOVE ACUMULATED SEDIMENTS TO AN UPLAND AREA AS NEEDED.

BakkenLink Pipeline, LLC	
TYPICAL CONSTRUCTION STRAW BALE INSTALLATION	
DRAWN BY: PCS	CHK'D. BY: PCS
DATE: 11-07-11	APPRV. BY: PCS
DWG. NO. DETAIL-2	REV A

01-03-12 13:59 10045 1 EM z:\solimana\10045\working\civil\typicals\detail-2.dwg

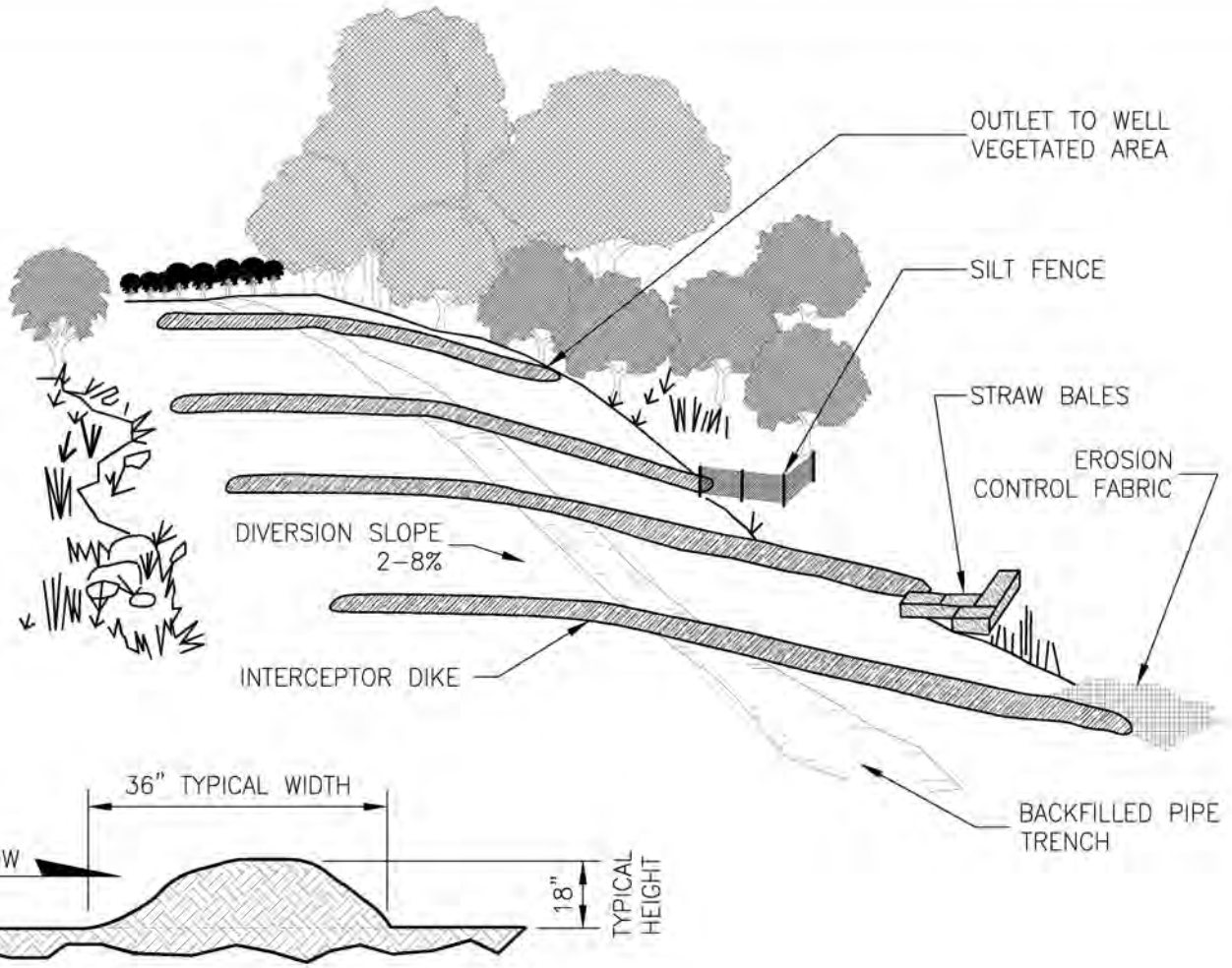

CROSS SECTION

NOT TO SCALE

INSTALLATION REQUIREMENTS:

- INSTALL PERMANENT INTERCEPTOR DIKES IN ALL AREAS EXCEPT RESIDENTIAL OR AGRICULTURAL AS NECESSARY TO AVOID EXCESSIVE EROSION (UNLESS AUTHORIZED BY LANDOWNER OR LAND MANAGING AGENCY IN AGRICULTURAL OR RESIDENTIAL AREA).
- MUST BEINSTALLED ON SLOPES GREATER THAT 5% WHERE THE BASE OIF THE SLOPE IS LESS THAN 50 FEET FROM A WATERBODY, WETLAND OR ROAD CROSSING AT THE FOLLOWING MINIMUM SPACING:

SLOPE (%)	SPACING (FT)
5-15	300
>15-30	200
>30	100

- CONSTRUCT USING EARTH FILLED SACKS, STAKED STRAW BALES, SILT FENCE, OR SOIL FOR TEMPORARY OR COMPACTED EARTH AND ROCK TO PERMANENT.
- INSTALL WITH A 2 – 8% OUTFALL ANGLE.
- POSITION OUTFALL TO PREVENT SEDIMENT DISCHARGE INTO WETLADS, WATERBODIES, OR OTHER SENSITIVE RESOURCES.
- FILTER RUN-OFF WATER BY CONASTRUCTIONG THE OUTLET IN A WELL VEGETATED STABLE AREA, OR BY USING AN ENERGY DISSIPATING DEVICE (SILT FENCE, STRAW BALES, EROSION CONTROL FABRIC), AS DIRECTED BY THE ENVIRONMENTAL INSPECTOE.

MAINTENANCE REQUIREMENTS:

- INSPECT DURING AND FOLLOWING CONSTRUCTION AND MAKE REPAIRS AS NEEDED.
- KEEP THE CHANNEL FREE OF DEBRIS AND OBSTRUCTIONS.
- SEED AND MULCH PERMANENT INTERCEPTOR DIKES FOLLOWING CONSTRUCTION.

BakkenLink Pipeline, LLC

TYPICAL CONSTRUCTION
INTERCEPTOR DIKE INSTALLATION

DRAWN BY:	PCS	CHK'D. BY:	PCS
DATE:	11-07-11	APPRV. BY:	PCS
DWG. NO.	DETAIL-3	REV	A

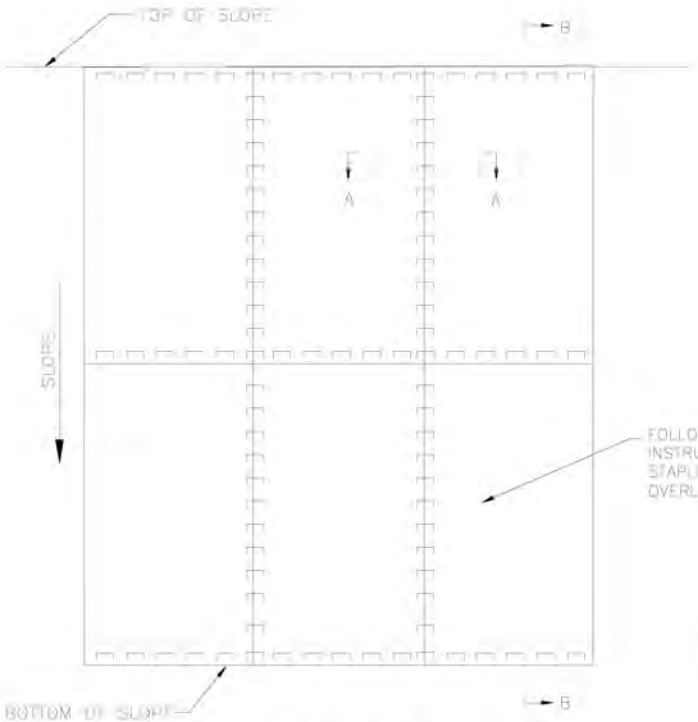

PLAN VIEW
SCALE: NOT TO SCALE

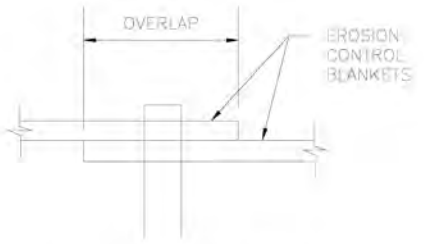

SECTION "A" – "A"
SCALE: NOT TO SCALE

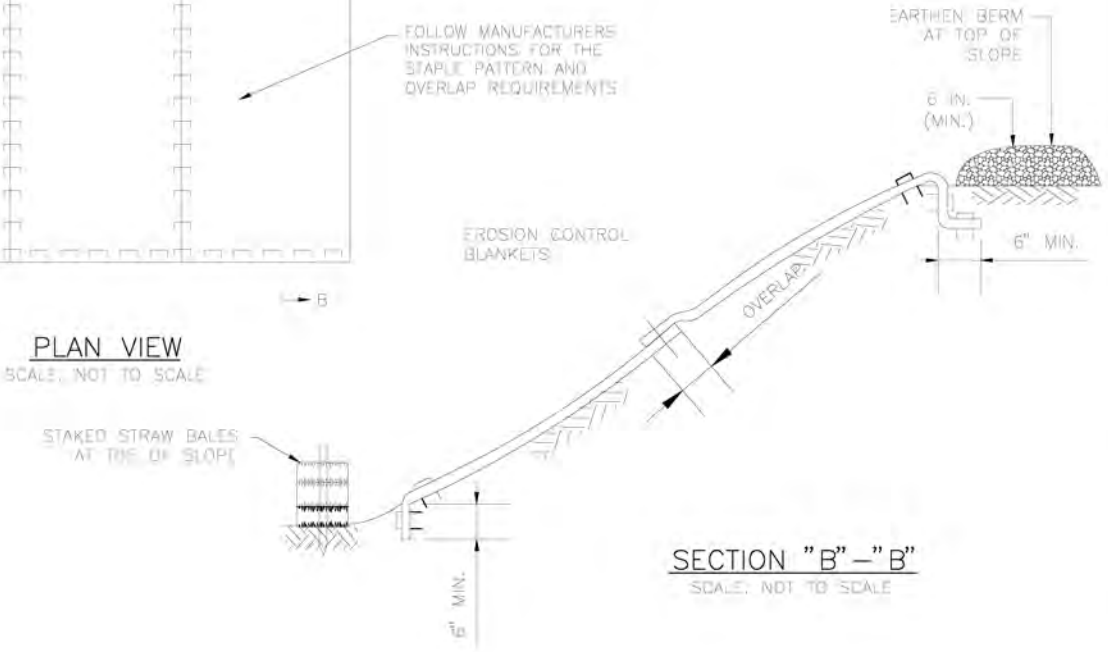

SECTION "B" – "B"
SCALE: NOT TO SCALE

NOTES:

1. EROSION CONTROL BLANKETS SHALL BE NORTH AMERICAN GREEN S 150 FOR SLOPES 3 TO 1 AND SC 150 FOR SLOPES 2 TO 1 OR APPROVED EQUALS.
2. INSTALL BLANKETS IN ACCORDANCE WITH MANUFACTURER'S INSTRUCTIONS.
3. PREPARE SOIL BEFORE INSTALLING BLANKETS, INCLUDING GRADING, REMOVAL OF LARGE ROCKS AND DEBRIS, AND THE APPLICATION OF SEED AND FERTILIZER.
4. EROSION CONTROL BLANKETS SHALL EXTEND COMPLETELY ACROSS DISTURBED AREAS TO PROTECT ERODIBLE SURFACES.
5. BEGIN AT THE TOP OF THE SLOPE BY ANCHORING THE BLANKET IN A MINIMUM SIX (6) INCHES WIDE AND SIX (6) INCHES DEEP TRENCH. BACKFILL AND COMPACT THE TRENCH AFTER STAPLING.
6. ROLL THE BLANKETS DOWN THE SLOPE IN THE DIRECTION OF THE WATER FLOW.
7. AS AN ALTERNATIVE TO STAPLES, WOODEN STAKES CAN BE USED.
8. ENSURE COMPLETE CONTACT BETWEEN THE BLANKETS AND THE SLOPE FACE. ADDITIONAL STAPLES CAN BE USED TO ELIMINATE GAPS.
9. EROSION CONTROL BLANKETS WILL BE INSTALLED AS REQUIRED BY LAND OWNER OR APPLICABLE PERMIT.

BakkenLink Pipeline, LLC

TYPICAL CONSTRUCTION
EROSION CONTROL
BLANKET INSTALLATION

DRAWN BY:	PCS	CHK'D. BY:	PCS
DATE:	11-07-11	APPRV. BY:	PCS
DWG. NO.	DETAIL-4	REV	A

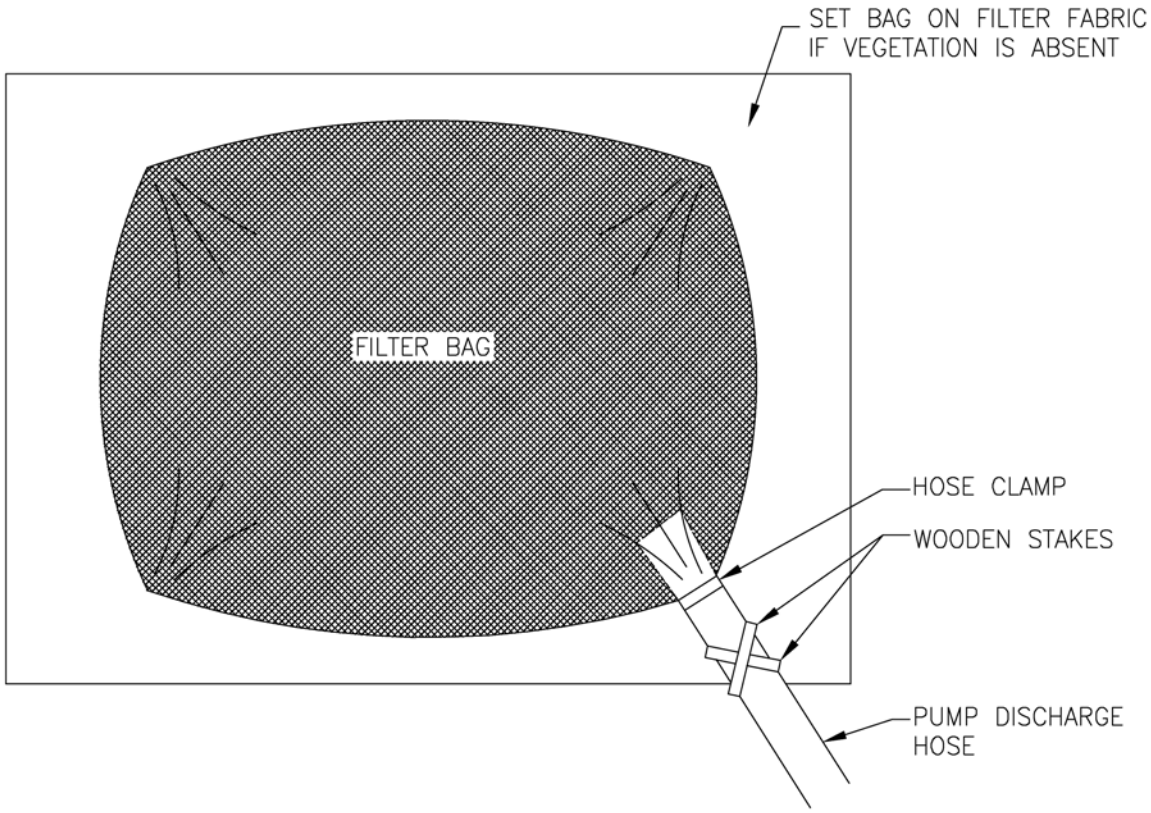

PLAN VIEW

N.T.S.

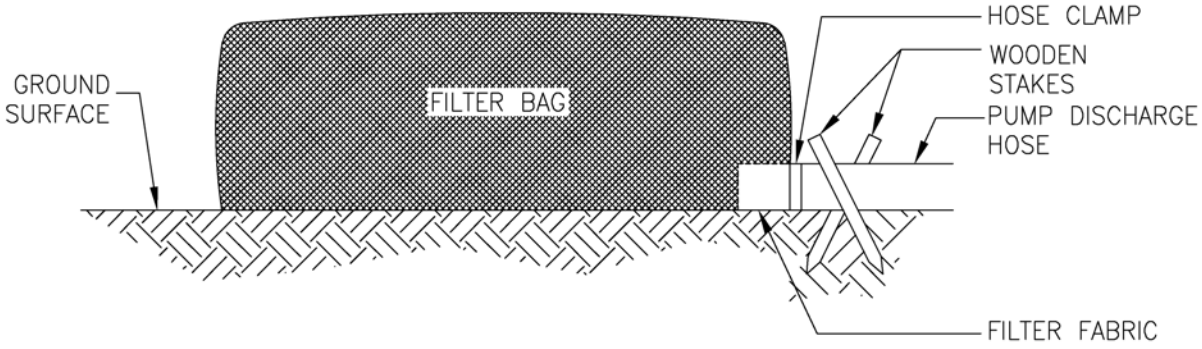

CROSS-SECTION

N.T.S.

NOTES:

1. LIMIT ONE (1) DISCHARGE HOSE PER BAG.
2. REMOVE DEWATERING STRUCTURE AS SOON AS POSSIBLE AFTER COMPLETION OF DEWATERING ACTIVITIES.

BakkenLink Pipeline, LLC	
TYPICAL CONSTRUCTION FILTER BAG INSTALLATION	
DRAWN BY: PCS	CHK'D. BY: PCS
DATE: 11-07-11	APPRV. BY: PCS
DWG. NO. DETAIL-5	REV A

z:\quintana\10045\working\civil\typicals\detail-5.dwg 1 EM 10045 01-03-12 14:09

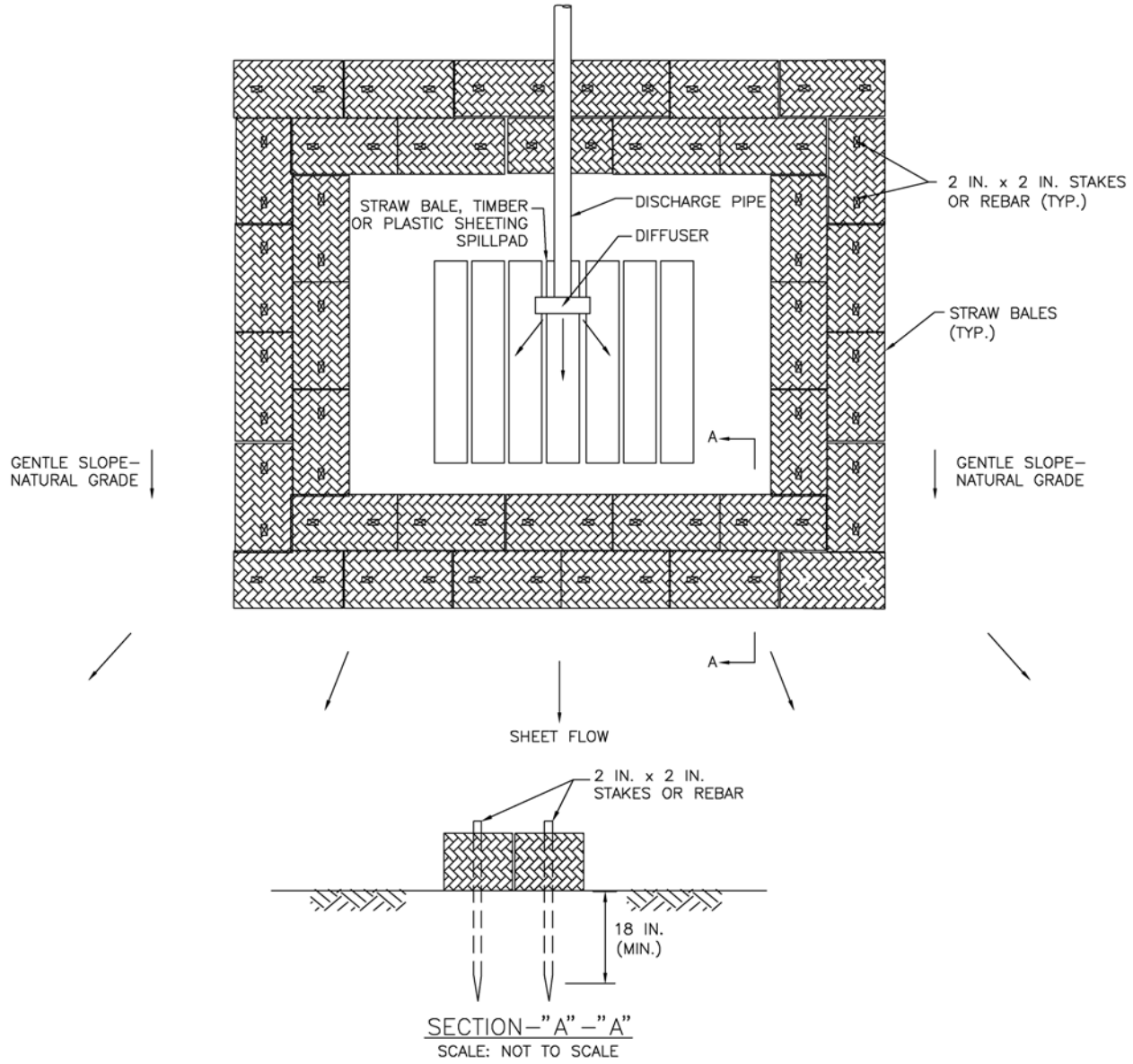

SECTION–"A"–"A"

SCALE: NOT TO SCALE

NOTES:

1. INSTALL A STRAW BALE DEWATERING STRUCTURE WHEREVER IT IS NECESSARY AND AS DIRECTED BY THE ENVIRONMENTAL INSPECTOR TO PREVENT THE FLOW OF HEAVILY SILT LADEN WATER INTO WATER BODIES OR WETLANDS. ALL DEWATERING ACTIVITIES SHALL BE IN ACCORDANCE WITH ENVIRONMENTAL SPECIFICATION AND RELEVANT PERMITS.

2. DISCHARGE SITE SHOULD BE WELL VEGETATED AND LOCATED AT LEAST 50 FEET FROM ANY WATERCOURSE. THE TOPOGRAPHY OF THE SITE SHOULD BE SUCH THAT WATER WILL FLOW INTO THE DEWATERING STRUCTURE AND AWAY FROM ANY WORK AREAS. THE AREA DOWN SLOPE FROM THE DEWATERING SITE MUST BE REASONABLY FLAT OR STABILIZED BY VEGETATION OR OTHER MEANS TO ALLOW THE FILTERED WATER TO CONTINUE AS SHEET FLOW.

3. DIRECT THE PUMPED WATER ONTO A STABLE SPILL PAD CONSTRUCTED OF ROCKFILL, WEIGHTED TIMBERS, OR A WOVEN GEOTEXTILE STAKED TO THE GROUND SURFACE, SUCH AS MIRAGI 600X, TERRAFIX 400W, OR A COMPANY APPROVED EQUIVALENT.

4. DISCHARGE RATES SHOULD BE SUCH THAT THE CAPACITY OF THE STRUCTURE WILL NOT BE EXCEEDED.

5. DISCHARGE WATER SHALL BE FORCED INTO SHEET FLOW IMMEDIATELY BEYOND THE SPILL PAD USING A COMBINATION OF STRAW BALES AND THE NATURAL TOPOGRAPHY. DRIVE TWO (2) STAKES OR REBAR INTO EACH BALE TO ANCHOR THEM IN PLACE.

6. MANUFACTURED FILTER BAGS ARE A SUITABLE ALTERNATIVE TO STRAW BALE STRUCTURES FOR TRENCH DEWATERING. FILTER BAGS SHALL BE INSTALLED AS SPECIFIED BY THE MANUFACTURER. DISPOSE OF FULL FILTER BAGS AT AN APPROVED OFF–SITE FACILITY.

BakkenLink Pipeline, LLC		
TYPICAL CONSTRUCTION STRAW BALE DEWATERING STRUCTURE		
DRAWN BY: PCS	CHK'D. BY: PCS	
DATE: 11–07–11	APPRV. BY: PCS	
DWG. NO. DETAIL–6	REV A	

z:\quintana\10045\working\civil\typicals\detail–6.dwg 01–03–12 14:10 10045 1 BM

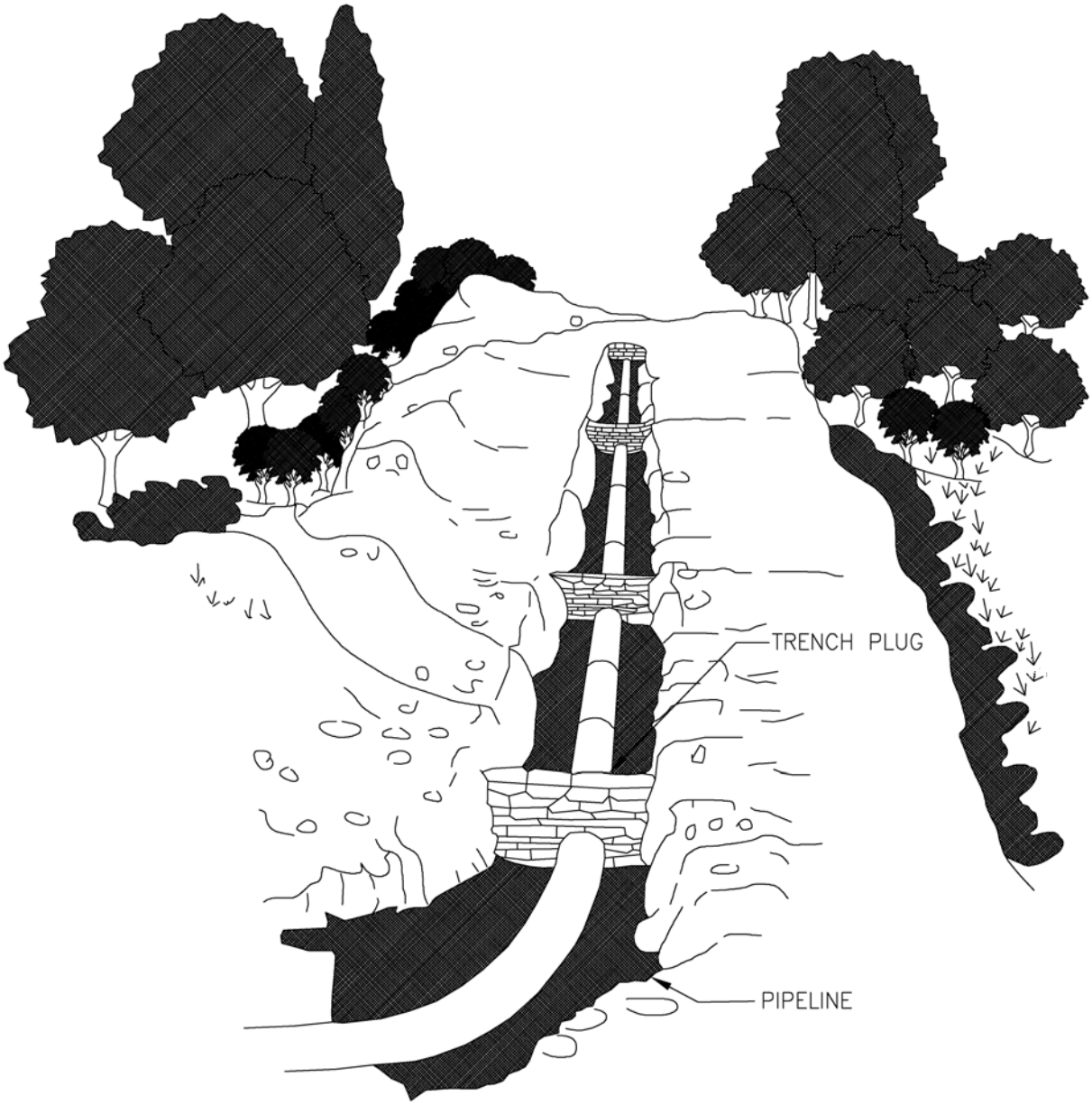

NOTES:

SLOPE (%)	SPACING (FT)
5–15	300
>15–30	200
>30	100

BakkenLink Pipeline, LLC

TYPICAL CONSTRUCTION
PERMANENT
TRENCH PLUGS

DRAWN BY: PCS	CHK'D. BY: PCS
DATE: 11–07–11	APPRV. BY: PCS
DWG. NO. DETAIL–7	REV A

z:\quintana\10045\working\civil\typicals\detail–7.dwg
01–03–12 14:11 10045 1 EM

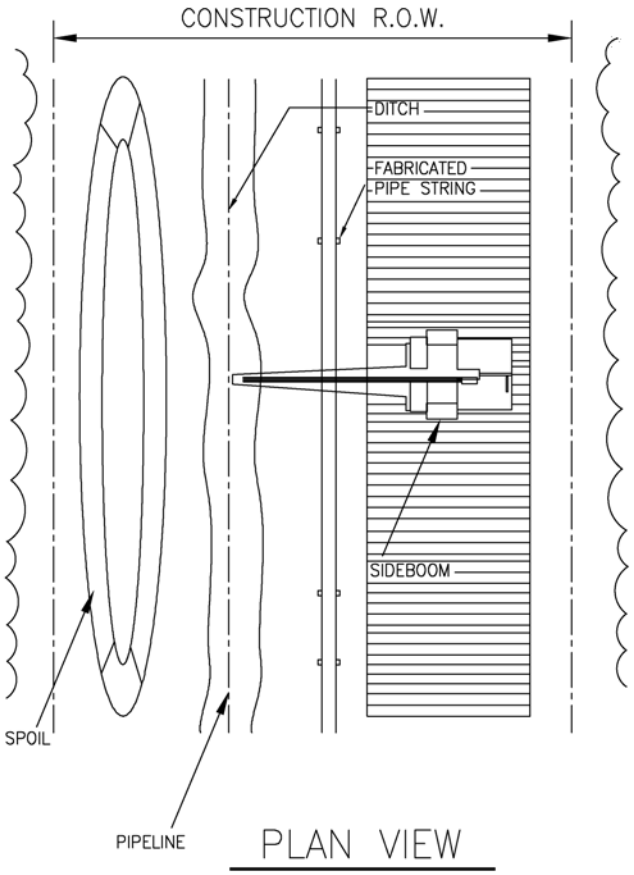

PLAN VIEW

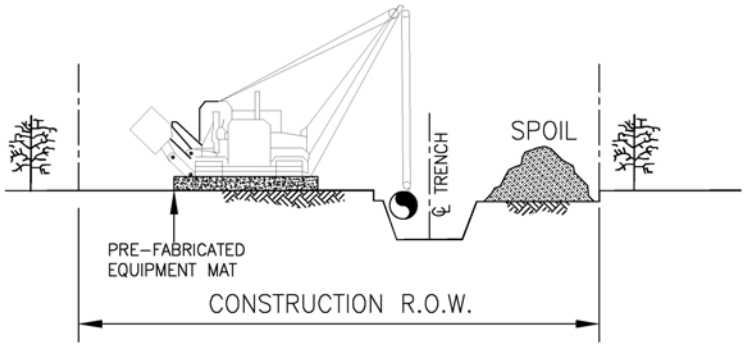

SECTION A-A

CONSTUCTION PROCEDURES:

1. FLAG WETLAND BOUNDARIES PRIOR TO CLEARING.
2. NO REFUELING OF MOBILE EQUIPMENT IS ALLOWED WITHIN 100 FEET OF WETLAND. PLACE "NO FUELING" SIGN POSTS 100 FEET BACK FROM WETLAND BOUNDARY. REFUEL STATIONARY EQUIPMENT AS PER THE PROJECT'S SPILL PREVENTION PROCEDURES.
3. INSTALL TEMPORARY SLOPE BREAKER UPSLOPE WITHIN 100 FEET OF WETLAND BOUNDARY IF DIRECTED BY THE PROJECT.
4. INSTALL TIMBER MATS/RIPAP THROUGH ENTIRE WETLAND AREA. EQUIPMENT NECESSARY FOR RIGHT-OF-WAY CLEARING MAY MAKE ONE (1) PASS THROUGH THE WETLAND BEFORE MATS ARE INSTALLED.
5. AVOID ADJACENT WETLANDS. INSTALL SEDIMENT BARRIERS (STRAW BLAES AND/OR SILT FENCE) AT DOWNSLOPE EDGE OF RIGHT-OF-WAY AND ALONG WETLAND EDGE AS REQUIRED.
6. RESTRICT ROOT GRUBBING TO ONLY THAT AREA OVER THE DITCHLINE AND DITCH SPOIL AREAS AND REMOVED FROM WETLAND FOR DISPOSAL.
7. TOPSOIL STRIPPING SHALL NOT BE REQUIRED IN SATURATED SOIL CONDITIONS.
8. PIPE SECTION MAY BE FABRICATED WITHIN THE WETLAND AND ADJACENT TO ALIGNMENT, OR IN STRING STAGING TRENCH THROUGH WETLANDS.
9. LOWER-IN PIPE, INSTALL TRENCH PLUGS AT WETLAND EDGES AS REQUIRED AND BACKFILL IMMEDIATELY.
10. REMOVE TIMBER MATS OR PRE-FABRICATED MATS FROM WETLAND UPON COMPLETION.
11. RESTORE GRADE TO NEAR PRE-CONSTRUCTION TOPOGRAPHY, REPLACE TOPSOIL AND INSTALL PERMANENT EROSION CONTROL.

BakkenLink Pipeline, LLC		
TYPICAL CONSTRUCTION STANDARD WETLAND CROSSING METHOD		
DRAWN BY: PCS	CHK'D. BY:	PCS
DATE: 11-08-11	APPRV. BY:	PCS
DWG. NO. DETAIL-8	REV	A

01-03-12 14:12 10045 1 EM z:\quintana\10045\working\civil\typicals\detail-8.dwg

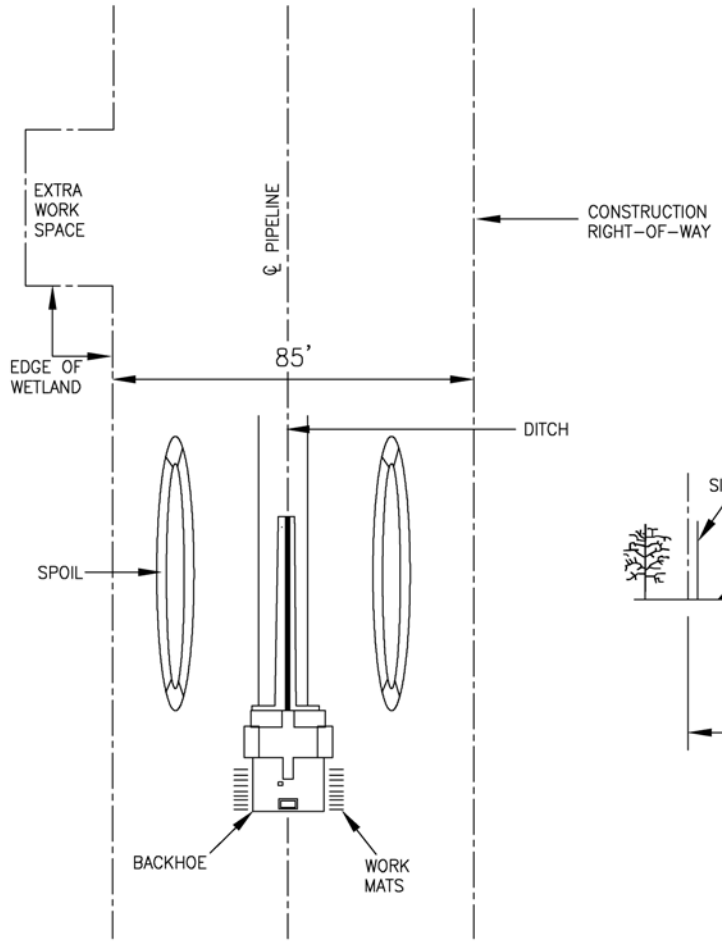

PLAN VIEW

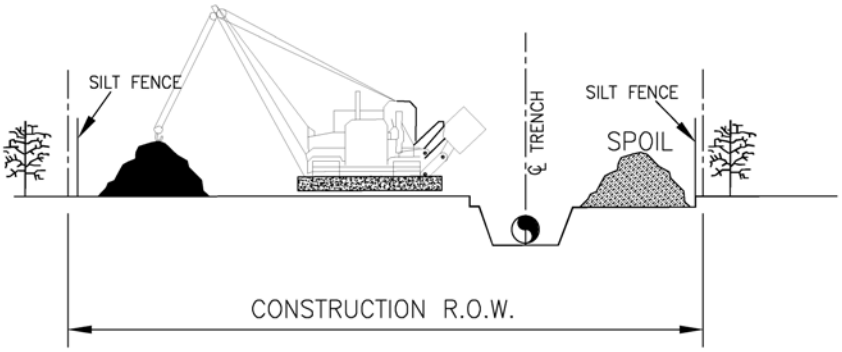

SECTION A-A

CONSTUCTION PROCEDURES:

1. FLAG WETLAND BOUNDARIES PRIOR TO CLEARING.
2. NO REFUELING OF MOBILE EQUIPMENT IS ALLOWED WITHIN 100 FEET OF WETLAND. PLACE "NO FUELING" SIGN POSTS 100 FEET BACK FROM WETLAND BOUNDARY. REFUEL STATIONARY EQUIPMENT AS PER THE PROJECT'S SPILL PREVENTION PROCEDURES.
3. INSTALL TEMPORARY SLOPE BREAKER UPSLOPE WITHIN 100 FEET OF WETLAND BOUNDARY IF DIRECTED BY THE PROJECT.
4. RESTRICT ROOM GRUBBING TO ONLY THE AREA OVER THE DITCHLINE.
5. TOPSOIL STRIPPING SHALL NOT BE REQUIRED IN SATURATED SOIL CONDITIONS.
6. UTILIZE AMPHIBIOUS EXCAVATORS (PONTOON MOUNTED BACKHOES) OR TRACKED BACKHOES SUPPORTED BY FABRICATED TIMBER MATS OR FLOATS TO EXCAVATE TRENCH. IF FABRICATED TIMBER MATS ARE USED FOR STABILIZATION. THE BACKHOE SHALL GRADUALLY MOVE ACROSS THE WETLAND BY MOVING THE MAT FROM IMMEDIATELY BEHIND TO IMMEDIATELY IN FRONT OF THE BACKHOE'S PATH.
7. AVOID ADJACENT WETLANDS. INSTALL SEDIMENT BARRIERS (STRAW BALES AND/ OR SILT FENCE) AT EDGE OF RIGHT-OF WAY AND ALONG WETLAND EDGE IF PRACTICAL.
8. FABRICATE PIPE IN STAGING AREA OUTSIDE THE WETLAND UNTIL JUST PRIOR TO PIPE PLACEMENT.
9. LEAVE HARD PLUGS AT THE EDGE OF THE WETLAND UNTIL JUST PRIOR PLACEMENT.
10. FLOAT PIPE IN PLACE, LOWER-IN, INSTALL TRENCH PLUGS AT WETLAND EDGES WHERE REQUIRED AND BACKFILL IMMEDIATELY
11. REMOVE TIMBER MATS OR PRE-FABRICATED MATS OF NON-NATIVE MATERIAL FROM WETLANDS UPON COMPLETION.
12. RESTORE GRADE TO NEAR PRE-CONSTRUCTION TOPOGRAPHY AND INSTALL PERMANENT EROSION CONTROL.
13. THE CONSTRUCTION RIGHT-OF-WAY FOR THIS TYPE OF CONSTRUCTION SHALL BE 85 FEET.

BakkenLink Pipeline, LLC		
TYPICAL CONSTRUCTION PUSH/PULL WETLAND CROSSING METHOD		
DRAWN BY: PCS	CHK'D. BY:	PCS
DATE: 11-10-11	APPRV. BY:	PCS
DWG. NO. DETAIL-9		REV A

z:\quintana\10045\working\civil\typicals\detail-9.dwg 1 EM 10045 01-03-12 14:44

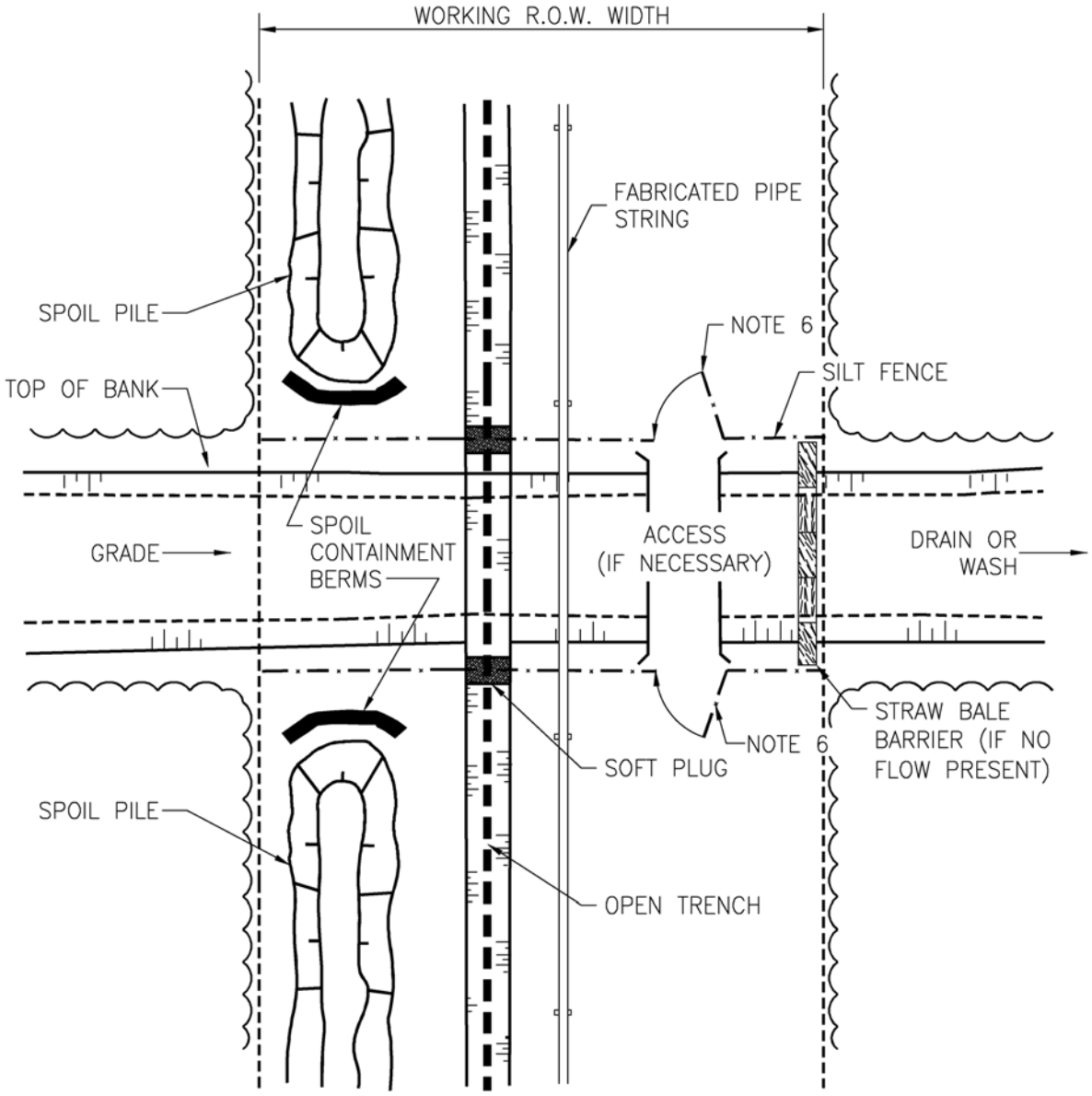

PLAN VIEW

NOT TO SCALE

NOTE:

1. APPLICABLE TO MINOR (<10') WATERBODIES THAT ARE NOT FLOWING AT THE TIME OF CONSTRUCTION, OR DO NOT SUPPORT A SIGNIFICANT FISHERY.
2. WEHICLE ACCESS IS ONLY REQUIRED WHERE NECESSARY TO FACILITATE EQUIPMENT MOVEMENT AND MAY CONSIST OF TIMBER MATS, TEMPORARY BRIDGES, RAIL FLATARS OR FLUME CROSSING.
3. INSTALL SOFT PLUGS FOLLWOING EXCAVATION OF MAINLINE DITCH THROUGH CROSSING.
4. INSTALL SEDIMENT BARRIERS AS INDICATED. PROTECT ACCESS WITH SILT FENCE GATES OR STRAW BALE BARRIERS.
5. MAINLINE PIPE SECTION MAY SPAN CROSSING IN PREPARATION FOR LOWER IN.
6. SILT FENCE OR STRAW BALE "GATE" TO BE CLOSED AT NIGHT OR DURING RAINFALL.

BakkenLink Pipeline, LLC

TYPICAL CONSTRUCTION
NON-FLOWING
OPEN CUT CROSSING

DRAWN BY: PCS	CHK'D. BY: PCS
DATE: 11-07-11	APPRV. BY: PCS
DWG. NO. DETAIL-10	REV A

z:\quintana\10045\working\civil\typicals\detail-10.dwg
01-03-12:45 10045 1 EM