OVERLAND PASS PIPELINE PICEANCE LATERAL

APPENDIX 12

ENVIRONMENTAL PROTECTION PLAN

PREPARED FOR:
BUREAU OF LAND MANAGEMENT

PREPARED BY:
CH2M HILL TRIGON, INC.
34 VAN GORDON STREET, SUITE 200
LAKEWOOD, COLORADO 80228

JULY 1, 2008

CH2MHILL TRIGON EPC

TABLE OF CONTENTS

Page

1.0 INTRODUCTION 1

1.1 Purpose 1
1.2 Goals and Objectives 1

2.0 RESPONSIBILITIES 1

2.1 OPPC 1
2.2 Contractor 2
2.3 Environmental Inspector 2

3.0 CLEARING 2

3.1 Clearing, Grading, and Topsoiling 2
3.1.1 Topsoil Conservation 3
3.1.2 Clearing, Grading and Topsoiling Requirements 4
3.2 Clearing and Grading Near Waterbodies and Wetlands 5
3.2.1 Waterbodies 5
3.2.2 Wetlands 6
3.2.3 Floodplains 6

4.0 EROSION AND SEDIMENT CONTROL MEASURES 6

4.1 Sediment Barriers 7
4.1.1 GeneralRequirements 8
4.1.2 StrawBales 8
4.1.3 SiltFences 8
4.2 Waterbars 9
4.3 Trench Breakers 10
4.4 Trench Dewatering 10
4.5 Hydrostatic Test Dewatering 11
4.6 Mulching 11
4.6.1 StrawMulch 11
4.6.2 Rock and Vegetative Debris 11
4.6.3 Erosion Control Matting 12

5.0 WETLAND AND WATERBODY CONSTRUCTION METHODS 12

5.1 GeneralRequirements 12
5.1.1 Flagging 12
5.1.2 Hazardous Materials 13
5.2 Dry Drainages 13
5.3 Vehicle and Equipment Crossings 13
5.4 Waterbody and Wetland Installation 14
5.4.1 GeneralRequirements 14
5.4.2 ClearingandGrading 14
5.4.3 Waterbody Crossing-Flume 14
5.4.4 Waterbody Crossing-Open-Cut, NonFlowing 15
5.4.5 Wetland Installation 15

6.0 RECLAMATION PROCESS 16

6.1 Agricultural Features 16

DRAFT

6.2 Wetlands and Waterbodies *17*
6.3 Rock Disposal *17*
6.4 Final Cleanup *17*
6.5 Topsoil Restoration *18*
6.6 Permanent Erosion Control *18*
6.7 Seedbed Preparation *18*
6.8 Soil Supplements *18*
6.9 Revegetation *18*
6.9.1 SpeciesSelectionandSources 19
6.9.2 Seed Application Rates and Viability 19
6.9.3 Seeding Methods and Procedures 19
6.10 Grazing *20*

7.0 MONITORING AND MAINTENANCE 20

7.1 Construction *20*
7.2 Post-Construction *21*
7.3 Evaluating Reclamation Success *22*

8.0 RECLAMATION SCHEDULE AND DOCUMENTATION 22

8.1 Post-Construction Reporting *23*

DRAFT

LIST OF ATTACHMENTS

Attachment 1 Best Management Practices

Attachment 2 Watebodies and Wetlands Crossings

Attachment 3 BLM District Seed Mixes

Attachment 4 Reclamation Monitoring Form

Attachment 5 Stormwater Management Plan

1.0 INTRODUCTION

This Environmental Protection Plan (Plan) describes measures to be taken by Overland Pass Pipeline Company LLC (OPPC) and its contractors (Contractor) to salvage and restore topsoil and to minimize erosion during construction, operation, and maintenance of the Piceance Lateral Pipeline Project (project). The term Contractor may be broadened to include a separate Reclamation Contractor. Measures for construction activities in and around dry drainages, waterbodies, and wetlands are also covered in this Plan. These methods and procedures have been included in U.S. Army Corps of Engineers (Corps) Nationwide Permit 12 Pre-Construction Notification. Methods for reseeding and reclaiming disturbed areas following construction are also covered in this Plan.

Measures identified in this Plan apply to work within the defined project right-of-way, access roads, temporary use areas, and other areas used during construction, operation, and maintenance of the project.

OPPC and Contractor personnel are to be thoroughly familiar with this Plan and its contents prior to initiating construction on the project.

1.1 Purpose

The purpose of this Plan is to describe prescribed methods to protect and replace topsoil; control and minimize soil erosion and resulting sedimentation; protect water resources, encourage revegetation, restoration, and stabilization of disturbed soils on the project; limit introduction and spread of noxious weeds, and return the disturbed area to pre-existing conditions. This Plan has been designed to minimize the environmental impacts to wetlands, waterbodies and dry drainages during crossings. Its purpose is to maintain the integrity of hydrologic function, riparian and wetland function, soil productivity, and water purity during this proposed action. This Plan was developed as the implementing document for relevant mitigation measures contained in the Environmental Assessment.

1.2 Goals and Objectives

Short-term objectives of this Plan are to conserve and protect topsoil, to control erosion and sedimentation, to protect water quality and aquatic resources, to encourage reclamation success, and to minimize impacts to adjacent land uses and ecological resources. Properly executed construction practices, and ongoing evaluation by OPPC, Contractor, and Bureau of Land Management (BLM) personnel will ensure both reclamation success and the continued functioning of erosion and sediment control measures, which will mitigate short-term impacts.

Long-term objectives include control of erosion and sedimentation, as well as protection, followed by restoration, of environmental resources including water, soils, topography, and vegetation to a condition similar to that which existed prior to disturbance. Monitoring activities during the construction, operations, and maintenance phases will be designed to evaluate the success of the erosion control and revegetation efforts. As described in the Plan of Development, a long-term monitoring program over the life of the pipeline will occur as part of OPPC's pipeline operations activities to ensure that right-of-way stabilization and revegetation is successfully achieved.

2.0 RESPONSIBILITIES

2.1 OPPC

OPPC will be responsible for ensuring that the Contractor meets the standards defined in this Plan to retain topsoil where required, to install and maintain sediment and erosion control measures, to restore disturbed areas to pre-construction conditions, and to monitor restoration progress and

DRAFT

erosion control measures. OPPC will also ensure that environmental oversight of the project includes pre-construction marking and flagging of waterbodies and wetlands. OPPC will, prior to any right-of-way clearing and grading, ensure that the Contractor has sufficient environmental protection supplies and materials on hand to initiate installation of erosion control devices. This includes straw bales, silt fencing, and other materials. OPPC will provide Contractor with the appropriate blended seed mixes developed through consultation with the BLM and fee landowners. Additionally, OPPC will be responsible for meeting long-term restoration and soil stabilization standards after the project is completed. OPPC is responsible for reclaiming the entire right-of-way after construction.

2.2 Contractor

The Contractor will be responsible for ordering and maintaining an inventory of environmental control supplies and materials sufficient not only to meet daily construction requirements, but also for use in emergency situations. The Contractor will be responsible for conducting grading and topsoil separation activities, installing and maintaining temporary and permanent erosion control measures, and restoring original contours on the right-of-way. The Contractor is responsible for monitoring the effectiveness of the installed devices and correcting any conditions that do not meet the specifications of this Plan. OPPC's Environmental and Construction Inspectors will ensure that the Contractor properly installs and maintains erosion control measures according to attached typical specifications.

Installation of most erosion control devices will be performed during the construction phase. Erosion control measures implemented during construction may include waterbars, trench breakers, silt fence sediment barriers, and straw bale sediment barriers. Permanent erosion control measures implemented during restoration may include seedbed preparation, seeding, waterbars, trench breakers, permanent mulching, erosion control matting, silt fence sediment barriers, and straw bale sediment barriers. Native materials that were stored following right-of-way clearing activities may also be used in sediment control.

The Contractor will be responsible for seeding the right-of-way, temporary use areas, temporary access roads, and other off right-of-way sites following their construction activities. The Contractor will conduct reclamation activities according to this Plan. The Contractor is responsible for long-term monitoring of reclamation activities following construction and for any adjustments necessary for successful reclamation (as per OPPC and/or BLM).

2.3 Environmental Inspector

OPPC's Environmental Inspector (EI) will have the responsibility to ensure field activities are performed in accordance with this Plan by the Contractor and in compliance with other permits and agreements. The EI will ensure that when the Contractor constructs through sensitive resources, activities are conducted as required in this Plan. EI will also ensure that marking and flagging remains in place and is visible throughout construction. The EI will have the authority to make site-specific field changes in certain reclamation procedures within the guidelines of this Plan in consultation with the fee-landowner or BLM.

3.0 CLEARING

3.1 Clearing, Grading, and Topsoiling

All vegetation will be mowed within the stake boundaries of the ROW. On Federal lands managed by the BLM, the construction right-of-way will be graded over the trench and the working side with topsoil and other spoil being stockpile on the non-working side. On non-federally managed lands, grading will occur where necessary to provide for safe and efficient operation of construction equipment and inspection vehicles, and to provide space for the storage of subsoil and topsoil.

Construction activities and ground disturbance will be limited to approved, staked areas.

Where necessary, trees will be cut with a chain saw and/or mechanical shears and brush will be generally cut with a hydro-axe or similar equipment. Trees and larger shrubs will be cut as close to the ground as possible. Stumps will be left in place except over the trench line or as necessary to create a safe and level workspace. OPPC's Environmental Inspector will coordinate with the appropriate agency or landowner to locate areas for stump disposal. Trees will be felled inside the approved right-of-way boundaries. OPPC will acquire the appropriate timber sale agreement/permits from BLM prior to cutting or removing trees.

On Federal lands managed by the BLM, trees will be windrowed adjacent to the right-of-way or temporary use areas provided that equipment stays within the approved right-of-way boundaries. Following construction, these materials will be evenly dispersed over the portion of the right-of-way from which the trees and brush were originally removed to impede future access along the right-of-way and to provide wildlife habitat. However, if the BLM desires, timber may be made available to the public for firewood or fence posts. This wood would be de-limbed, cut into 4 to 8 foot lengths, and stockpiled on the right of way or within approved temporary use areas at points where the right-of-way crosses access roads (in a manner such that the stockpiled wood will not hinder reclamation efforts).

OPPC shall redistribute large, woody material salvaged during clearing operations on BLM-administered lands within the White River Resource Area in those areas where the proposed pipeline deviates from an existing ROW or corridor. Materials shall be dispersed over the portion of the ROW from which the trees and brush were originally removed to meet fire management objectives and to provide wildlife habitat, seedling protection and a deterrent to vehicular traffic. Woody materials dispersed across the ROW shall not exceed 3 to 5 tons/acre. Excess woody materials may be mulched or made available for firewood or fence posts.

On private lands, brush and other materials cleared from the right-of-way may be chipped or shredded and incorporated into the topsoil at the direction of the landowner. Private landowner requirements will be listed in the Fee Land Line List included as Attachment 3 of the Plan of Development.

On Federal lands managed by the BLM, available topsoil between the depths of 4-12 inches will be removed from the trench line and the working side of the ROW. Prior to construction, OPPC with the help of a Soil Scientist will identify the depths of topsoil that will be removed. These areas will be identified on the construction alignment sheets. Examples of soils where the amount removed may be greater than 6 inches would include soil units 130 and 162 located in Moffat County, Colorado. In areas where more than 6 inches of topsoil is removed, additional Temporary Use Areas may be required to stockpile the additional soil.

No matter the amount of topsoil removed, topsoil will be stockpiled separately from subsoil and will not be used to pad the trench or construct trench breakers.

On private lands, topsoil will generally be stripped up to a depth of 6 inches from the trench line; however, at the private landowner's request, more than 6 inches of topsoil may be salvaged and/or topsoil will be salvaged across the full-width of the right-of-way or a portion thereof. Up to 12 inches of topsoil will be stripped across the trench line or construction right-of-way in irrigated agricultural lands. Topsoil will be stockpiled separately from subsoil and will not be used to pad the trench or construct trench breakers.

3.1.1 Topsoil Conservation

Topsoiling requirements are defined in Section 3.2 of the Plan of Development and above. Topsoil

will be salvaged and protected along the entire pipeline route to facilitate revegetation of the right-of-way after construction is complete.

Topsoil will be segregated from trench spoils using one of the following methods: from either the full-work area (trench line and working side of ROW) or from the trench line only (trench line only method) depending on the amount of surface leveling needed and the requirements of the landowner.

As mentioned above, on lands adminsitered by the BLM, available topsoil between the depths of 4-12 inches will be removed from the trench line and the working side of the ROW. In areas where more than 6 inches of topsoil is removed, additional Temporary Use Areas may be required to stockpile the additional soil.

On fee-lands, topsoil will generally be stripped up to a depth of 6 inches from the trench line; however, at the fee-landowner's request, more than 6 inches of topsoil may be salvaged and/or topsoil may be salvaged across the full-width of the right-of-way or a portion thereof. Up to 12 inches of topsoil will be stripped across the full-width of the right-of-way in irrigated agricultural lands.

In dry wetlands, prior to trenching, topsoil up to 12 inches in depth will be stripped from over the trench line. If the wetland is located on a side hill, topsoil will be stripped from the entire area being graded. Topsoil will be stockpiled in a location where it will not be mixed with any upland soils or wetland subsoil. Care will be taken to ensure that the area stripped over the trench line is wide enough to include topsoil over trench sidewalls that may slough off due to high groundwater. If the wetland has standing water or saturated soils, every attempt will be made to remove and stockpile topsoil up to 12 inches in depth.

Topsoil will be stockpiled separate from subsoil and will not be used to pad the trench or construct trench breakers. Dry drainages or washes that cross the right-of-way will not be blocked with topsoil or subsoil piles. Topsoil and subsoil will be placed on the banks of the drainage. Topsoil will be stripped from the stream banks along the trench line and stockpiled at least 10 feet from water's edge behind sediment barriers or other containment structures. Gaps will be left periodically in the topsoil and subsoil windrow to avoid ponding and excess diversion of natural runoff during storm events. Stockpiled topsoil will be contained within the ROW or TUA's. On steeper side sloping situations where cutting into the slope is necessary to achieve a level trench area, topsoil will be placed upslope, above the cut.

3.1.2 Clearing, Grading and Topsoiling Requirements

OPPC's Construction Inspectors will ensure that the Contractor implements the following mitigation measures during clearing, grading, and topsoiling operations:

- All seasonal closures on State and Federal lands will be observed.
- Brace and secure each fence crossed before cutting the opening needed for construction to prevent slacking of the wire. The opening will be closed by temporary gates or by the installation of cattle guards as necessary or as requested by the landowner to prevent passage of livestock. Fences will be braced and secured in accordance with BLM specifications. See Attachment 1 for fence cut and restoration and temporary fence gate typicals.
- Install temporary fencing and/or cattle guards as required by pre-construction agreements with landowners to prevent livestock entry into the construction right-of-way.
- Survey monuments found within the right-of-way will be protected. Survey monuments include, but are not limited to, General Land Office and BLM Cadastral Survey Corners,

reference corners, witness points, U.S. Coastal and Geodetic benchmarks and triangulation stations, military control monuments, and recognizable civil (both public and private) survey monuments.

- If any survey monuments found within the right-of-way or temporary use areas are disturbed or obliterated during the course of the project, the Contractor will immediately report it to OPPC. OPPC will report it in writing to the Authorized Officer and the respective installing authority, if known.
- Clearing will be performed to preserve roots to the extent practicable, while stockpiling vegetation wastes to maintain stability of the site, and provide erosion control. Steep slopes will be graded properly to minimize erosion.
- Cleared vegetation will be disposed of as requested by the BLM, state agency, or the private landowner.
- Cuts and fills will be minimized in order to reduce the amount of soil exposed to erosion.
- Available topsoil will be salvaged as listed below:
    - Federal lands managed by the BLM: 4-12 inched across the trench line and the working side of the ROW. Depth to be determined prior to construction and identified on the alignment sheets.
    - Private lands: unless otherwise directed by the private landowner, up to 6 inches across the trench line, except irrigated agricultural lands where up to 12 inches of topsoil will be stripped across the full-width of the right-of-way.
- Salvaged topsoil will be kept separate from subsoil.
- Dry drainages or washes that cross the ROW will not be blocked with topsoil piles. Topsoil will be placed on the banks of the drainage. Gaps will be left periodically in the topsoil windrow to avoid ponding and excess diversion of natural runoff during storm events.
- Erosion control measures will be implemented in accordance with Section 5.0 of this Plan.
- Equipment traveling the ROW will not create ruts deeper than 6 inches for distances of 50 feet or greater.

Within Hay Gulch, work within or adjacent to populations of Piceance bladderpod will be subject to the following conditions in order to protect these plants to the greatest extent possible.

- Topsoil over the trench line passing through the bladderpod population will be and kept separate from all other topsoil. The topsoil collected from the bladderpod area will be returned to the area from which it was collected at the conclusion of construction.
- Disturbed areas within the bladderpod population area will not be reseeded.

In addition to the requirements listed above, all other mitigation and reclamation requirements in this plan will be followed in the bladderpod area, provided they do not conflict with the bladderpod-specific requirements.

3.2 Clearing and Grading Near Waterbodies and Wetlands

3.2.1 Waterbodies

A waterbody is any natural or artificial ponded water (stock pond, lake, etc.), river, or drainage with perceptible flow (or pooled water in the case of ponds and lakes) at the time of crossing. Clearing adjacent to waterbodies may involve the removal of riparian trees and brush from the construction right-of-way and additional temporary use areas. Clearing and grading at waterbody crossings will be limited to that needed to construct the crossing. During vegetative clearing, the root systems will be left in place except over the trench line and in areas that require grading. In these areas, riparian vegetation above the trench line will be carefully excavated and stored so that it may be transplanted later during the rehabilitation of waterbody crossing areas. Root systems may also

DRAFT

be removed along the travel lane to allow safe passage by rubber-tired vehicles. Initial grading will be limited to the extent needed to create a safe approach to the waterbody and to install bridges.

3.2.2 Wetlands

A wetland is any area that satisfies the requirements of the current federal methodology for identifying and delineating wetlands. Clearing of vegetation in wetlands will be limited to trees and shrubs which will be cut flush with the surface of the ground and removed from the wetland. To avoid excessive disruption of wetland soils and the native seed and rootstock within the wetland soils, stump removal, grading, topsoil segregation, and excavation will be limited to the area immediately over the trench line. A limited amount of stump removal and grading may be conducted in other areas if dictated by safety-related concerns. In addition, the construction ROW width will be decrease to 50 feet within all jurisdictional wetlands.

3.2.3 Floodplains

The Federal Emergency Management Agency defines a floodplain as the following:

"Flood plain or flood-prone area means any land area susceptible to being inundated by water from any source" (44 CFR 59.1). Areas of floodplain that are delineated wetlands will be treated as described in Section 3.3.2.

4.0 EROSION AND SEDIMENT CONTROL MEASURES

A discussion of soil types found along the project route is included in Section 2.4 of the Stormwater Management Plan/Stormwater Pollution Prevention Plan written for this project. Natural Resources Conservation Service (NRCS) erosion potentials for soil types in Carbon and Sweetwater Counties, Wyoming were not available. For the portion of the route through Rio Blanco and Moffat Counties, Colorado, soils with high erosion potential based upon those soil types within Wind Erodibility Groups 1 and 2 account for approximately 17% of disturbed soils.

The following general environmental protection measures will be implemented to minimize environmental impacts during construction and operation of the project.

- Install temporary erosion and sediment control devices as defined in the Stormwater Management Plan (Attachment 5) and in Section 4.1 through 4.4 of this document, prior to initial soil disturbance that will be maintained throughout construction and restoration, as necessary, until replaced by permanent erosion control measures.
- Limit disturbance during construction to the minimum necessary to efficiently complete construction activities.
- Prohibit mud blading of BLM roads. Vehicles may be towed through the mud provided they stay within the original roadway and do not cause rutting greater than that allowed by permit or as directed by BLM Authorized Officer.
- Cease local activities on BLM roads when road surfaces become saturated to a depth of 4 inches for a distance of 50 feet or greater.
- Complete construction, cleanup, and reclamation as practical to keep the time period between grading, trench excavation, backfilling, and final restoration/reclamation to a minimum.
- Minimize cut and fill to reduce the amount of exposed slopes.

OPPC is not currently planning to seed topsoil piles to control erosion. Construction will be planned such that the topsoil is not anticipated to be piled long enough for seeding to be effective. OPPC will work with BLM to consider methods of protecting topsoil piles, such as the use of water, soil stabilizers, or tackifiers, if timing and conditions warrant and access to the areas is not

prohibited due to seasonal restrictions.

Stream banks and slopes above dry drainages, waterbodies and wetlands require additional stabilization beyond the replacement of original contours and other normal erosion control requirements. Stabilization of waterbody banks with on-site materials (e.g. placing felled trees along the stream banks) will be determined on-site by the EI in consultation with the BLM. Straw mulch or other geotechnical matting will be required for stabilization on dry drainage and waterbody stream banks through the riparian zone (or 50 feet, whichever is greater).

Temporary and permanent erosion control measures as defined in the Stormwater Management Plan (Attachment 5) and in Section 4.1 through 4.4 of this document will be installed to control erosion and transport of sediment. Erosion and sediment controls will be used and maintained during phases of construction. Selection of appropriate erosion controls will be based on soil properties, steepness of the slope, and anticipated surface flow or runoff. Erosion control measures will include sediment barriers, waterbars, erosion control fabric, geotechnical matting, and vegetative and rock mulch.

Temporary control measures will effectively reduce erosion and sedimentation to sensitive resources during construction. These temporary erosion control measures will be installed prior to construction earthwork and will be maintained throughout the course of construction. When necessary, these measures may be left in place along with permanent measures during the post construction period until effective revegetation has been reestablished. Sediment barriers, waterbars (as described below), and mulch, will be the primary measures for temporary erosion control used on the project.

Interim erosion control measures will temporarily stabilize portions of the disturbed construction area near sensitive resources if construction is delayed for significant periods following disturbance. In general, temporary erosion control measures will be removed after permanent erosion control measures have been installed.

Permanent erosion control measures will minimize erosion and sedimentation after construction until revegetation efforts have effectively stabilized the construction area. Installation of permanent erosion control measures should be performed within 30 days following backfilling of the trench.

The following sections review materials, installation requirements, and performance criteria for temporary and permanent erosion and sediment control measures.

4.1 Sediment Barriers

Sediment barriers are temporary devices designed to slow water flow down and intercept suspended sediment conveyed by sheet flow, while allowing runoff water to continue down gradient. These barriers are used to prevent sediment conveyance off of the construction area while diverting water from the construction area. Sediment barriers may include silt fence, certified weed-free straw bales, excelsior logs, or sandbags.

Sediment barriers will be installed at the base of slopes at road crossings, wetlands, and waterbodies; on exposed slopes; around topsoil or subsoil stockpiles and along the down slope edge of the right-of-way. Sediment barriers may be installed at the top of the waterbody bank if no herbaceous strip exists. Adjacent to wetlands and within temporary use areas as necessary, sediment barriers will be installed and maintained to minimize the potential for sediment runoff during clearing and construction activities. Sediment barriers will also be installed at the edge of the workspace in culturally or biologically sensitive areas. Sediment barriers will be installed prior to initial ground disturbance. The requirement to install a sediment barrier is dependent on the slope angle (when a hillside slopes in multiple directions, the slopes can off-set each other and

reduce the need for sediment barriers), slope length, and soil type (texture and coarse fragment content). While typically used only during construction sediment barriers may be left in place following seeding possibly for a complete growing season.

See the Typical Straw Bale Sediment Barrier and Typical Silt Fence Sediment Barrier in Attachment 1 for additional information. Only biodegradable erosion control materials will be used.

4.1.1 General Requirements

Sediment barriers placed at the base of a slope will be at least 6 feet from the toe of the slope, where possible, in order to increase ponding volume. The ends of the sediment barrier will be turned upslope to capture sediment.

Sediment barriers will be placed so as not to hinder construction activities. Sediment barriers will be installed between the spoil piles and the edge of the right-of-way where there is a potential for material to leave the right-of-way. If sediment barriers are placed across the construction area (adjacent to waterbodies, wetlands, or roads) where construction traffic is allowed to cross, provisions will be made for traffic flow. An approximately 15-foot-wide gap will be provided along the sediment barrier right-of-way, with the ends of the sediment barrier turned slightly upslope. A drivable earth berm will be installed and maintained across the gap immediately upslope of the sediment barrier (ends of the sediment barrier will tie into the drivable earth berm); alternatively, sediment barriers will be installed across the gap with 24 inches of overlap with the adjacent sediment barrier at the end of each day.

If sediment loading is noted during regular inspections to be at or greater than 50 percent of barrier capacity, sediment behind the barrier will be spread on the disturbed right-of-way uphill of the sediment barrier. Loose stakes, loosely abutted bales, damaged bales, or damaged or undermined sections of sediment barrier will be repaired or replaced as necessary.

4.1.2 Straw Bales

Straw bale sediment barriers consist of a line of tightly abutted straw bales placed perpendicular to the runoff direction with the ends turned upslope. The barriers are typically one bale high, placed on the fiber-cut edge (tie not in contact with the ground) in a 4-inch deep trench, and anchored securely with two wooden stakes driven through each bale. A small amount of soil is then piled across the upslope side of the straw bale barrier.

Only certified weed free straw bales with biodegradable (not photodegradable) strings will be used. Excelsior logs, such as Bon Terra BioWattle-FX or equivalent approved by the Environmental Inspector in consultation with the BLM, may be substituted for straw bales. These excelsior logs will have a lifespan of at least 3 years. Installation will be as recommended by the manufacturer.

When straw bales or excelsior logs are used as a temporary substitute for waterbars, the same spacing noted for waterbars will be used (see Section 4.2).

4.1.3 Silt Fences

Commercial filter fabrics, with sufficient strength to prevent failure will be provided by the Contractor. The height of a silt fence will not exceed 36 inches and the fabric will be cut from a continuous roll of fabric with splices only at support posts, with a minimum 6-inch overlap and both ends of fabric securely attached to the post. Support posts will be a maximum of 10 feet apart.

Silt fences will be placed about three feet from the toe of a slope (subject to edge of ROW and other restrictions) to allow temporary ponding and deposition of sediment. The bottom edge of silt fences will be installed in a trench excavated approximately 6 inches wide by 6 inches deep and

DRAFT

refilled with compacted soil, unless on-site constraints dictate otherwise (e.g., rock). In situations where rock prohibits burying of silt fence, sandbags will be used to keep the bottom of the silt fence firmly attached to the ground and prevent water flow under the fence. Silt fences will be attached to supporting posts by staples or wire.

Silt fences will generally be located downslope of sedimentation barriers or other soil stabilization controls to effectively control runoff, particularly in areas adjacent to wetlands or waterbodies. If additional support is needed to contain wet spoil, or to provide added protection near a sensitive resource, either wire mesh or straw bales may be placed immediately behind the silt fence on the down-gradient side. If wire mesh is used, the wire will be attached to the support posts, prior to installation of the fabric, with heavy duty wire staples at least 1-inch long, wire ties, or hog rings. The wire will be keyed into the trench at least 2 inches, and extended up the posts to the top of the filter fabric. Silt fences will not be used on slopes steeper than 1:1 or in areas with large boulders or soil clods that could tear the fence or otherwise reduce its functionality.

Silt fences will be inspected regularly to ensure proper function is maintained. Any damaged or non-functioning silt fences will be replaced or repaired within 24 hours of discovery.

4.2 Waterbars

Waterbars (slope breakers) are utilized in various forms (e.g. drivable berms across travel ways, waterbars on slopes) during project construction and after final grade restoration. Waterbars are utilized for the purpose of reducing the velocity and concentration of runoff and dispersing runoff into stable, well-vegetated, or adjacent rocky areas to prevent excessive sheet erosion and formation of a gully resulting in transport of sediment off of the right-of-way onto adjacent areas.

Waterbars will be installed in sloped areas susceptible to erosion and near the base of slopes adjacent to wetlands, riparian areas, and watercourses. Waterbars will be constructed as berms made from disturbed soil materials within the construction right-of-way. Topsoil will not be used to construct waterbars.

Temporary waterbars will be installed concurrently with initial grading operations, and will be maintained throughout construction. Permanent waterbars will be installed after the right-of-way grade is restored.

Waterbar spacing is primarily dependent upon the slope of the right-of-way, the soil erosion potential, and the general right-of-way configuration. Temporary waterbars will be installed at the base of slopes adjacent to roads, wetlands or waterbodies, and in sloped areas susceptible to erosion. Temporary spacing will be determined based on site-specific conditions as determined by the Environmental Inspector.

Permanent waterbars will be installed across the right-of-way after topsoil replacement. Permanent waterbars will not be installed on irrigated agricultural lands unless requested by the fee-landowner. Permanent waterbar spacing will typically be installed at the following intervals:

Slope (percent)	Spacing (feet)
5-15	300
15-30	200
30 +	100

Permanent waterbar spacing and size may be adjusted based on site-specific conditions. Criteria to be considered for spacing adjustment will include:

- slope angle (if right-of-way crosses side slopes, they may not require waterbars)
- slope length (broken terrain may reduce effective slope length)

- soil type (texture and coarse fragment content)
- visual sensitivity
- landowner requests

Waterbars will be constructed of existing suitable material (compacted soil), a series of tightly abutted straw bales, excelsior logs, or burlap bags filled with native soil. Permanent waterbars will typically be installed with a 2 to 8 percent outfall and will extend slightly past the edge of the disturbed right-of-way to facilitate drainage off of the right-of-way. Drainage or outfall from waterbars will be directed into natural drainage swales and stable, well-vegetated or non-erosive (rocky) areas. The drainage from the slope breaker outlets may be further controlled with energy-dissipating devices which may include rock or sediment barriers based upon site-specific conditions.

The Contractor will regularly inspect and repair waterbars during construction to maintain their effectiveness. Waterbars worn down by heavy construction traffic, or filled with sediments will be repaired as needed, and the sediments will be spread on the disturbed right-of-way uphill of the waterbar.

See Typical Waterbars in Attachment 1 for additional information.

4.3 Trench Breakers

Trench breakers consisting of polyurethane foam or sandbags will be installed around the pipe in the trench to restrict or slow ground water flow along the trench. Topsoil will not be used to construct trench breakers. Trench breakers will be installed in the trench prior to backfilling on steep slopes and slopes adjacent to waterbodies and wetlands. An engineer or similarly qualified professional will determine the need for, and spacing of, trench breakers. Otherwise, trench breakers will be installed at the same spacing as, and upslope of, permanent waterbars. See Typical Trench Breaker in Attachment 1 for additional information.

4.4 Trench Dewatering

The Contractor will be responsible for proper dewatering of the trench, where necessary. Trench dewatering will comply with applicable permit requirements. Dewatering discharge will be directed at a controlled rate onto a stable surface and will utilize a section of geotextile fabric, siltation bag, straw belt structure, or similar erosion preventative device to prevent scouring during discharge. If dewatering operations take place near waterbodies, riparian areas, or wetlands, a number of strategies may be implemented to prevent heavily sediment-laden water from reaching sensitive resources. These strategies include:

- Locate dewatering discharges as far as practicable from waterbodies and wetlands (considering local topography, vegetation, and soils). Dewatering discharge will not be pumped directly into wetlands or waterbodies.
- Minimize duration of dewatering discharges by scheduling dewatering operations immediately prior to lowering in, tie-ins, or backfilling.
- Minimize disturbance of the trench (i.e. additional digging) to the extent practicable until the majority of the water is pumped out.
- Use dewatering structures and/or sediment bags to remove heavy sediments from discharges when dewatering near (within approximately 100 feet of) waterbodies, riparian areas, wetlands, or other sensitive resources, as needed.

See Typical Straw Barrier Dewatering Structure and Siltation Bag in Attachment 1 for additional information.

DRAFT

4.5 Hydrostatic Test Dewatering

Applicable permits for hydrostatic test dewatering will be obtained and complied with. Specific dewatering requirements related to hydrostatic test dewatering are discussed in the Pressure Testing Plan (Appendix 7).

4.6 Mulching

Mulching is the application of certified weed-free straw, wood fiber, other vegetative material, or rock to disturbed soils to minimize the effects of wind or rain on exposed soils. During rainy conditions, mulch reduces the impact of rainfall and slows the flow of water down the slope. Mulch also optimizes the soil regime necessary for successful revegetation, especially on dry, sandy sites. Mulch (as opposed to erosion control mats described in Section 5.6.3) would typically be used across large sections of the right-of-way to reduce wind erosion and raindrop impact. If necessary, a tackifier may be incorporated with the mulch to control the amount of mulch leaving the ROW due to wind and water.

After final restoration and seeding, permanent mulch applications will be applied to slopes greater than 15 percent (until the slope is less than 30 percent), within 100 feet of waterbodies and wetlands, and in areas where the NRCS Wind Erodibility Groups Rating is 1 or 2. Refer to Section 2.4 of the Stormwater Management Plan/Stormwater Pollution Prevention Plan for soil types impacted by the proposed project.

4.6.1 Straw Mulch

Certified weed-free straw mulch will be anchored into the seedbed using a mechanical crimper specifically designed to crimp mulch to a depth of 2 to 3 inches. Acceptable straw mulch crimpers include:

- mechanical crimper
- backhoe with crimper forks
- tracked equipment tracking up and down slopes (restricted to areas where other methods will not work)
- hand-punching with round-pointed shovel
- equivalent approved by the EI

A regular farm disc or a sheepsfoot packer will not be used. If a straw mulch blower is used, strands of the mulching material will be at least 8 inches long to allow anchoring.

Areas requiring mulch application will have the mulch uniformly applied over at least 75 percent of the ground surface at a rate of 2 tons/acre.

In areas where straw mulch is applied, the Contractor will insure that the straw is crimped adequately reduce loss from wind. Where straw mulch can not be adequately crimped, other techniques such as netting or tackifiers will be utilized to prevent the mulch from moving due to wind or water.

4.6.2 Rock and Vegetative Debris

Vegetative debris and excess rock may be used to reduce erosion potential by providing additional surface relief structure. Where approved by the BLM, vegetative debris salvaged during clearing and grading operations will be distributed across the right-of-way. Layering of rock may be used on the surface of erodible soils in some critical areas to reduce erosion and restore appearance of native surface. Suitable sites include naturally rocky slopes and areas that have a natural gravel, cobble, or boulder veneer on the surface. Suitable sites will be determined in conjunction with the

DRAFT

BLM or fee-landowner.

4.6.3 Erosion Control Matting

Erosion control matting will be installed after final grade restoration to reduce rain impacts on soils, to reduce erosion, and to stabilize steep slopes and waterbody banks where determined by the EI. Erosion control matting will typically be used on slopes greater than 40 percent for 100 feet either side of waterbodies or wetlands or until the slope is less than 40 percent. Erosion matting will also be used at locations identified by the BLM Authorized Officer or field representative.

Acceptable matting for use on steep slopes will be North American Green SC 150 BN (a straw/coconut matrix sewn between two natural fiber nets) or equivalent approved by the EI. Matting acceptable for streambank stabilization will be North American Green C125 BN (a coconut fiber matrix sewn between two natural fiber nets), Bon Terra CF7 mats (100 percent coir [coconut] fiber woven into a high strength matrix), or equivalent approved by the EI. Matting will be woven with biodegradable netting.

Mats will be furnished in continuous rolls of 30 feet or greater with a minimum width of 4 feet. Staples will be made of wire, 0.091 inch in diameter or greater, and have a "U" shape with legs 8 inches in length and a 2-inch crown. Wire staples will be driven into the ground for the full length of the staple legs. Alternatively, wood pegs (0.5-inch diameter) may be used to secure the erosion control fabric.

Installation and stapling of erosion control matting will follow procedures specified in the details included in Attachment 1. For streambank installations, mats will be laid parallel (upper mat overlapping lower mat in a shingle pattern) to the waterbody to a point above the top of the bank. The erosion control mats identified above for streambank stabilization are designed to handle flow and can be placed under the ordinary high water mark of the streambank. Native material (rocks, logs, etc.) may be used in conjunction with the matting to aid in stabilization of banks.

During regular erosion control monitoring, erosion control matting will be inspected for washouts, adequate staking, and loss of matting. Damaged or undermined matting will be repaired or replaced as necessary.

See Typical Erosion Control Matting Slopes and Typical Erosion Control Matting Streambanks in Attachment 1 for additional information.

5.0 WETLAND AND WATERBODY CONSTRUCTION METHODS

5.1 General Requirements

Construction equipment working in wetlands and waterbodies will be limited to that which is essential for right-of-way clearing, trench excavation, pipe fabrication and installation, backfilling, and right-of-way restoration. In areas where there is no reasonable access to the right-of-way except through wetlands, non-essential equipment will be allowed to travel through wetlands only if the ground is firm enough or has been stabilized to avoid creating ruts or on construction matting put in place for a driving lane. Foreign material (upland soil, rock, tree stumps, etc.) will not be imported into the wetland to stabilize the working area. If standing water or saturated soils are present, equipment will work from, and access across, timber equipment mats. If the wetland is dry, equipment can use the right-of-way for access on an as-needed basis with as much traffic as possible routed around the wetland.

5.1.1 Flagging

OPPC will sign and/or flag the following boundaries at least 72 hours prior to any clearing or

grading, or before any construction crew is within 1 mile of any wetland or waterbody.

- Limits of the right-of-way in waterbodies and wetlands (survey flagging)
- Edges of wetland boundaries ("Wetland Boundary" sign)
- Limits of 100-foot buffers for fueling and concrete coating activities ("No Refueling" sign). Within the Rawlins Resource Area, the set back will be 500 feet from all permanent waters, wells, springs, wetlands, and riparian areas, as well as 100 feet from the inner gorge of ephemeral stream channels.

5.1.2 Hazardous Materials

The Contractor will comply with the requirements included in the Hazardous Materials Management and Spill Prevention, Containment, and Countermeasure Plan (Appendix 6) and requirements contained in authorizing documents. The Contractor will not store hazardous materials, chemicals, fuels, lubricating oils, or perform concrete coating activities within 100 feet of any waterbody or dry drainage. Within the Rawlins Resource Area, the set back will be 500 feet from all permanent waters, wells, springs, wetlands, and riparian areas, as well as 100 feet from the inner gorge of ephemeral stream channels. Equipment or vehicles that are crossing or working within 100 feet of waterbodies will not be refueled unless a specific exception is given by the EI. If any hazardous material must be temporarily stored or transferred within 100 feet (500 feet in the RRA) of a waterbody (i.e. stationary pumps), then it must be placed within a secondary containment structure as specified in the Hazardous Materials Management and Spill Prevention, Containment and Countermeasure Plan (Appendix 7).

5.2 Dry Drainages

Dry drainage crossings will be constructed using the same upland, mainline construction methods that will be used along the rest of the right-of-way, except that spoil will be placed outside the channel. During cleanup and reclamation, the pre-construction profiles and contours (including meanders of the drainage bed) of dry drainages will be re-established. Mulch and erosion control matting will be installed in accordance with requirements for waterbodies and wetlands as discussed in this Plan.

5.3 Vehicle and Equipment Crossings

OPPC will acquire necessary permits for vehicle and equipment crossings of waterbodies and wetlands. Before construction, temporary bridges may be installed across waterbodies to allow construction equipment to cross. Bridges may include clean rock fill over culverts, timber mats supported by flumes, railcar flatbeds, flexi-float apparatus, or other types of spans. Care will be taken that excess water is not directed into sensitive areas during temporary bridge construction or use. Typical drawings for equipment bridges are included in Attachment1. Construction equipment will be required to use the bridges, except the clearing crew who will be allowed one pass through the waterbodies before the bridges are installed.

Equipment bridges will be one of the following types:

- portable bridges that span the channel
- clean rock riprap and flumes
- timber equipment mats

Each bridge will be designed to allow for maximum predicted flows for the time frames that it will be in place, including anticipated precipitation events. The Contractor will also maintain bridges so that soil from equipment or the bridge abutment is prevented from entering any waterbody. Certified weed-free sediment barriers will be used when necessary. Equipment bridges will be

removed as soon as possible after permanent seeding.

5.4 Waterbody and Wetland Installation

5.4.1 General Requirements

The following requirements apply to wetland and waterbody crossings.

- Crossings, both perennial and intermittent/ephemeral, will be protected from runoff entering the stream system with sediment control devices and by restricting clearing, grading, and operation of equipment to the minimal necessary area required to perform the crossing.
- Pipe segments for the crossing will be fabricated in adjacent upland temporary use areas.
- Tie-in locations will be in uplands where possible. Tie-ins near wetlands will have a soft trench plug between the tie-in location and the wetland.
- Pipe will be coated with concrete or equipped with set-on weights to provide negative buoyancy, where required.
- Spoil will be stored at least 10 feet from the water's edge and will be located behind sediment barriers or other containment structures.
- Substrate material removed from drainages (i.e. rock) will be returned to the channel and may require hand placing to restore habitat features.
- In-stream work will be limited to the construction equipment necessary to dig the trench, lower-in the pipe, and backfill the trench.
- Every effort will be made to complete in-stream work within 24 hours.
- Stream banks will be restored and reseeded as soon as possible after installation of pipe.
- Temporary livestock fencing would be installed at each waterbody crossing site (BLM land or by landowner permission). Fence will be installed around the incised banks and channel with a sufficient gap to allow passage of wildlife or livestock up or down the channel.

5.4.2 Clearing and Grading

Clearing adjacent to waterbodies will involve the removal of trees and brush from the construction right-of-way and additional temporary use areas. Clearing and grading at waterbody crossings will be limited to that needed to construct the crossing. During clearing, the root systems will be left in place except over the trenchline and in areas that require grading. Root systems may also be removed along the travel lane to allow safe passage by rubber-tire vehicles. Sediment barriers may be installed at the top of the waterbody bank if no herbaceous strip exists. Initial grading of the herbaceous strip will be limited to the extent needed to create a safe approach to the waterbody and to install bridges.

During clearing, sediment barriers will be installed and maintained across the right-of-way adjacent to waterbodies and within additional temporary use areas to minimize the potential for sediment runoff in accordance with the Soil Conservation, Sedimentation, and Erosion Control Plan. Silt fence and/or straw bales located across the working side of the right-of-way will be removed during the day when vehicle traffic is present and will be replaced each night. Alternatively, drivable berms may be installed and maintained across the right-of-way in lieu of silt fence and/or straw bales. The Contractor will maintain these devices in functioning order until construction activities, including reclamation, have been completed

5.4.3 Waterbody Crossing - Flume

The flume crossing method will involve trenching through the waterbody while water is directed to flow through a flume pipe over the trench line. Prior to trenching, a flume pipe sized to adequately

carry the stream flow will be placed in the channel to carry the stream flow over the trench line. Sandbags will be used to direct stream flow into the upstream end of the flume and at the downstream end to seal off the active trench area. Scour protection will be placed at the downstream end of the flume, if necessary. Track hoes will excavate a trench under the flume pipe from one or both of the waterbody banks. Equipment operating within the waterbody will be limited to that needed to construct the crossing. Sediment barriers will be installed where necessary to prevent sediment and excavated spoil from entering the water. Once the trench is excavated, the prefabricated segment of pipe will be installed under the flume in the trench at least 4 feet under the streambed. The trench will then be backfilled with native streambed spoil and the stream banks restored to pre-construction contours. Use of a flume crossing method for flowing waterbodies will allow for uninterrupted water flow, sediment passage, and movement of aquatic life during construction.

Detailed plans for each flumed crossing are provided in Attachment 2.

5.4.4 Waterbody Crossing - Open-Cut, Non Flowing

The open cut crossing method will involve trenching through the waterbody while water is not flowing over the trench line (Attachment 2). Track hoes will excavate a trench in the non-flowing waterbody from one or both of the waterbody banks. Equipment operating within the waterbody will be limited to that needed to construct the crossing. Sediment barriers will be installed where necessary to prevent sediment and excavated spoil from entering the water. Once the trench is excavated, the prefabricated segment of pipe will be installed in the trench at least 4 feet under the streambed. The trench will then be backfilled with native streambed spoil and the streambanks will be restored to pre-construction contours. Material removed from the channel will be replaced in order to restore the channel to pre-disturbance conditions.

Should any of the creek crossings be drying at the time of construction, this method of construction will be used instead of the flumed methodology.

5.4.5 Wetland Installation

Construction equipment working in wetlands will be limited to that essential for right-of-way clearing, trench excavation, pipe fabrication and installation, backfilling, and right-of-way restoration. In areas where there is no reasonable access to the right-of-way except through wetlands, non-essential equipment will be allowed to travel through wetlands only if the ground is firm enough or has been stabilized to avoid rutting. Foreign material (upland soil, rock, tree stumps, etc.) will not be imported into the wetland to stabilize the working area. If standing water or saturated soils are present, equipment will work from, and access across, timber equipment mats. If the wetland is dry, equipment can use the right-of-way for access on an as-needed basis with as much traffic as possible routed around the wetland.

Clearing of vegetation in wetlands will be limited to trees and shrubs which will be cut flush with the surface of the ground and removed from the wetland. To avoid excessive disruption of wetland soils and the native seed and rootstock within the wetland soils, stump removal, grading, topsoil segregation, and excavation will be limited to the area immediately over the trench line. A limited amount of stump removal and grading may be conducted in other areas if dictated by safety-related concerns.

During clearing, sediment barriers, such as silt fence and staked straw bales, will be installed and maintained adjacent to wetlands and within additional temporary use areas as necessary to minimize the potential for sediment runoff. Sediment barriers will be installed across the full width of the construction right-of-way at the base of slopes adjacent to wetland boundaries. Silt fence

and/or straw bales installed across the working side of the right-of-way will be removed during the day when vehicle traffic is present and will be replaced each night. Alternatively, drivable berms may be installed and maintained across the right-of-way in lieu of silt fence or straw bales. Sediment barriers will also be installed within wetlands along the edge of the right-of-way, where necessary, to minimize the potential for sediment to run off the construction right-of-way and into wetland areas outside the work area.

Timber equipment mats, or their equivalent, will be used to stabilize the work area, if needed. Construction equipment will work off of these timber mats where necessary. A typical wetland crossing detail is provided in Attachment 2.

The following requirements apply to all wetland crossings.

- Limit construction equipment working in wetlands to that essential for clearing, trench excavation, pipe fabrication and installation, backfilling, and restoration.
- Cut shrubs flush with the surface of the ground.
- Limit stump removal, grading, topsoil segregation, and excavation to the area immediately over the trench line to avoid excessive disruption of soils and the native seed and rootstock within the soils.
- Install sediment barriers to minimize the potential for sediment runoff into surface waters. Erosion and sediment control measures will be maintained until wetlands and adjacent upland areas are stabilized.
- When trench dewatering is necessary, locate dewatering structures in upland areas so that no heavily silt-laden water reaches a waterbody.
- Prohibit concrete coating, refueling activities, and hazardous material, chemical, fuel, or lubricating oil storage within 100 feet of any wetland or riparian area. Within the Rawlins Resource Area, the set back will be 500 feet from all permanent waters, wells, springs, wetlands, and riparian areas, as well as 100 feet from the inner gorge of ephemeral stream channels.

6.0 RECLAMATION PROCESS

After the final installation of the pipeline, disturbed portions of the construction workspace (including the right-of-way, travel lane, and temporary use areas) will be returned to pre-construction grades and contours. Topsoil will then be replaced over the right-of-way from the approximate area in which it was stripped. Final cleanup and installation of permanent erosion control measures will be completed after final backfilling. However, final cleanup does not included final seeding in upland areas. Seeding will be completed dependent upon permit stipulations and based upon guidance from the agencies and fee-landowners.

Revegetation will be the primary method to stabilize soils and ensure permanent erosion control over the long term. Shrubs, small trees, and ground cover from areas adjacent to road intersections may be transplanted at the intersections with the pipeline right-of-way to visually screen the pipeline corridor.

The following sections outline the pre-construction planning and sequential steps for restoring the right-of-way, temporary use areas, and temporary roads following installation of the pipe and backfilling of the trench.

6.1 Agricultural Features

Irrigation ditches, cattle guards, fences, and artificial and natural livestock and wildlife water sources will be maintained and repaired to at least pre-construction conditions. Temporary

DRAFT

measures will be provided, as agreed with the fee-landowner or BLM, for any of these facilities that are disrupted during the construction or reclamation process.

6.2 Wetlands and Waterbodies

Original meanders, profiles, other contours of waterbodies, and 25 feet up each waterbody bank (as measured from water's edge) will be restored. Any material that has accumulated in an intermittent/ephemeral stream will be removed and the stream will be returned to pre-construction form. Final cleanup will be concluded, bank seeding accomplished, and mulching or erosion control mats installed, prior to the end of the following time frames:

- waterbodies-24 hours after initial in-stream disturbance
- wetlands-within 10 days of backfilling in that wetland

There are exceptions to these time frames, as noted below:

- Seeding and installation of erosion control matting may be deferred until final cleanup (i.e. temporary bridge is removed and waterbody banks across the travel lane are restored to pre-construction conditions) if the stream banks and disturbed slopes above the waterbody are stabilized with an application of mulch extending 25 feet up the slope.
- Temporary bridges or other materials (e.g. timber mats) required for access during restoration will not be removed until they are no longer needed. Other areas at the crossing (culverts and other crossing materials), not needed for the bridge abutments, must meet the requirements above.
- Very steep or incised waterbody banks with the likelihood of further erosion will not have the original contour restored. These waterbody banks will be restored at a 1.5 to 1 slope (horizontal to vertical), which is equivalent to 67 percent slope. Transition from adjacent slopes, to those reclaimed over the right-of-way, will be made so as to prevent erosion between these transitions, and to minimize eddying at the toe of these slopes.
- If reclamation and bank seeding is deferred more than 10 days after final grade restoration near waterbodies and wetlands, disturbed slopes above waterbodies and wetlands will be temporarily stabilized by applying straw mulch for a minimum distance of 200 feet above the edge of the waterbody or wetland.

6.3 Rock Disposal

Excess rock is defined as rock that cannot be returned to the existing rock profile in the trench or graded cuts and is not needed to restore the right-of-way surface to a condition comparable to that found adjacent to the right-of-way. Excess rock will be randomly distributed across the right-of-way, piled or windrowed to create or enhance wildlife habitat, or arranged to block use of the right-of-way by motor vehicles. Excess rock distributed on the ROW will not exceed the percentage of rock found on adjacent, non-disturbed lands. The Contractor may also remove excess rock from the right-of-way and haul it to an approved disposal site as directed by BLM. OPPC will coordinate with fee-landowners or the BLM regarding the methods of disposal.

On irrigated agricultural lands, rocks will be removed from at least the top 12 inches of soil and diligent efforts will be made to remove stones greater than 4 inches in any dimension if the off-right-of-way areas do not contain stones greater than 4 inches in any dimension. Requirements for rock removal may vary between fee-landowners and will be listed in the Fee-Lands Line List, included the Plan of Development.

6.4 Final Cleanup

After final backfilling of the trench, weather permitting, the Contractor will make every effort to complete final cleanup and installation of permanent erosion control structures.

DRAFT

The right-of-way and other project-related areas where soil has been disturbed will be restored as close to pre-construction grade, compaction, and other conditions as possible. No solid waste, trash, or vegetative debris will be buried on the right-of-way.

Irrigated agricultural lands are of special concern and require precise re-contouring and trench compaction to return fields to pre-construction conditions. The Contractor will work closely with fee-landowners to ensure irrigated agricultural lands are effectively restored.

Final compaction of disturbed areas will be returned to approximate pre-construction conditions. Any compacted areas, including but not limited to the travel lane, will be decompacted with a scarifier, ripper, winged subsoiler, or similar implement to a depth of 6 to 10 inches prior to topsoil replacement and seeding. Compacted areas on irrigated agricultural land where topsoil was not salvaged will be decompacted to a depth of 18 inches using a paraplow, winged subsoiler, or other deep tillage implement so as not to mix topsoil and subsoil horizons.

6.5 Topsoil Restoration

After the trench has been backfilled and the right-of-way regraded, the Contractor will redistribute topsoil to the approximate location from which it was originally removed. Restored topsoil will be left in a roughened condition to discourage erosion and enhance the quality of the seedbed. Surface roughening is accomplished by replacing topsoil to the area from which it was gathered, but not smoothing this area with a grader. Topsoil will not be handled if excessively wet or frozen.

Topsoil will be redistributed as close to original salvage depths as possible. Segregation of subsoil and topsoil will be maintained throughout final cleanup procedures. The Contractor will be responsible for replacement of lost or degraded (mixed) topsoil with topsoil imported from an OPPC-approved and certified weed-free source. Additional erosion control and soil stabilization will be required in areas adjacent to or within drainages.

6.6 Permanent Erosion Control

Permanent erosion control measures will be installed after the trench is backfilled to aid in site stabilization wherever required.

6.7 Seedbed Preparation

The Contractor will scarify, till, or harrow the seedbed to a depth of 3 to 4 inches prior to seeding where needed to improve revegetation potential. Those sites where seedbed preparation is not practical (e.g., steep slopes, rocky areas, etc.) will be left with adequate roughness following topsoil replacement to create micro-environments for seed germination and growth, and to reduce the potential for soil movement. The surface can be roughened further by randomly distributing woody debris over the surface to be reclaimed.

6.8 Soil Supplements

Generally, fertilizer will not be used unless requested by the fee-landowner.

6.9 Revegetation

The Contractor will be responsible for seeding the right-of-way, temporary use areas and off-right-of-way ancillary sites using OPPC-supplied seed mixes, appropriate seeding methods, at approved application rates, and during the appropriate season. The seeding requirements and scheduling of reclamation activities will be determined in coordination with jurisdicting agency or fee-landowner. The seed will be randomly tested to ensure weed free status is maintained.

DRAFT

6.9.1 Species Selection and Sources

Selection of grass, forbs, and shrub species for revegetation will be based on pre-construction community composition and soil types, as well as establishment potential, soil stabilizing qualities, post-construction land use objectives, and BLM and fee-landowner recommendations. Native species will be utilized on Federal lands managed by the BLM and native species will be utilized to the extent possible on fee-lands unless non-natives are specifically requested by a fee-landowner.

Seed mixes will be purchased from commercial seed vendors and must be state-certified weed-free mixtures. Seed bag tags will be collected and submitted to the BLM and appropriate county to confirm that the seed was purchased from a commercial seed vendor and was tested and certified. Seeding rate will be listed as pounds per acre of pure live seed (PLS). The Contractor will be responsible for providing seed tags to the Environmental Inspector at the end of each day. The EI will provide seed tags and station seeded to the BLM. Approved seed mixes, rates, and application areas for each of the three BLM Field Offices are identified in Attachment 3.

Sagebrush seed used for reseeding shall be from local species and varieties and acquired from local sources. Within the WRRA, from MP 0.0 to 20.1, the following species shall be added to the #6 Native Seed mix; blue flax (Maple Grove) at 0.25 lbs PLS/acre and Utah/Northern sweetvetch at 1 lbs PLS/acre.

6.9.2 Seed Application Rates and Viability

Seeding rates will be determined in PLS pounds per acre and seeds per square foot based on drilled application rates. Broadcast seeding rates will be twice the drill rate. Seed will be used within 12 months of testing to assure seed viability. If additional seeding is required in the year following construction, additional viability tests will be conducted to determine any need for adjustment of application rates.

Wetlands will not be seeded unless noxious weeds are present in which case the weeds would be treated with reseeding possibly occurring thereafter should natural reclamation not occur. Successful recolonization by wetland species is generally related to effective topsoil salvage methods and sources of seed and rhizomes in adjacent areas.

Stream banks will be seeded immediately upon completion of final cleanup.

6.9.3 Seeding Methods and Procedures

The Contractor will employ broadcast or drill seeding as determined in the field by OPPC. Seeding activities will be contingent upon weather and soil conditions, seasonality, and subject to evaluation by the EI. Seeding will not be permitted if there is more than 2 inches of snow on the ground unless approved by the EI and BLM Authorized Officer or field representative. Upland seeding will generally occur between the dates of October 15 and November 15 or at a time requested by the fee-landowner or jurisdicting agency. On Federal lands managed by the BLM and where approved by the fee-landowner, the Contractor will randomly distribute any windrowed trees and shrubs or other remaining vegetation debris over the right-of-way (after seeding) by hand or appropriate equipment so as not to disturb the seedbed.

Drill Seeding

Drill seeding is the preferred seeding method and will be employed wherever soil characteristics and slope allow effective operation of a rangeland seed drill. Seed will be placed in direct contact with the soil at an average depth of 0.5 inches, covered with soil, and firmed to eliminate air pockets around the seeds. Seed will be applied using a rangeland seed drill with a seed release and agitation mechanism sufficient to allow seeds of various sizes and densities to be planted at

the proper seeding depth.

Broadcast Seeding

Broadcast seeding will be employed only in areas where drill seeding is unsafe or physically impossible. Seed will be applied using manually operated cyclone-bucket spreaders, mechanical spreaders, or blowers. Seed will be uniformly broadcast over disturbed areas. Broadcast application rates will be twice that of drill rates. Immediately after broadcasting, the seed will be uniformly raked, chained, dragged, or cultipacked to incorporate seed to a sufficient seeding depth.

6.10 Grazing

Prior to and during construction, OPPC will keep grazing allotment permittees on Federal lands managed by the BLM and fee-land ranchers informed regarding schedules to allow them ample opportunity to move livestock away from the right-of-way. Gates and fences will be installed along the right-of-way as required or if approved, cattle guards may be used. Hard or soft plugs will be left or installed to allow livestock to cross to either side of the right-of-way during construction. Gates and fences will be repaired or replaced after construction as agreed to with the fee-landowner or BLM. These facilities will be left in as good as or better shape than the pre-construction condition.

Fences crossed by the pipeline and cattle guards or gates on access roads or within the right-of-way damaged during construction on Federal lands managed by the BLM will be rebuilt or replaced in accordance with BLM specifications.

Riparian areas on Federal lands managed by the BLM will be fenced until reclamation is successful. Fence will be installed around the incised banks and channel with a sufficient gap to allow for passage of wildlife or livestock up or down the channel.

7.0 MONITORING AND MAINTENANCE

The Contractor will be responsible for ensuring that erosion control measures are fully functional, for continually monitoring erosion control measures along the right-of-way during construction, and for completing timely repairs of erosion control structures as needed.

The Construction and Environmental Inspectors will inspect erosion control measures along the right-of-way as a part of normal daily inspection tasks. The Construction and Environmental Inspectors will identify needed repairs and notify the Contractor who will then complete the repairs within 2 days of notification during construction and within 5 days after construction and cleanup are completed.

7.1 Construction

Throughout construction, temporary erosion control structures will be inspected daily in areas of active construction or equipment operation, on a weekly basis in areas with no construction or equipment operation, and in areas within 24 hours of each 0.5-inch or greater rainfall event, soil and weather conditions permitting.

The Contractor will monitor weather reports and in the event of impending heavy precipitation, the Contractor will inspect temporary erosion control devices where needed (e.g. areas considered to have greater potential for erosion, areas where cattle may have damaged erosion control measures, and areas of active construction) to ensure that erosion control measures have not been damaged since the last inspection. Temporary erosion control devices that are found in need of repair or replacement will be corrected immediately. During this period the Contractor will provide additional personnel, vehicles, and materials to repair erosion control structure damage

where noted during the inspection.

Should structures clog, deteriorate, fail, be damaged, or require maintenance, the Contractor will conduct repairs or replacements within 24 hours after problems have been identified; weather and soil conditions permitting. Erosion control structures should be fully cleaned of sediment when they reach 50 percent of holding capacity.

7.2 Post-Construction

Prior to the completion of construction, the Contractor and OPPC will verify that erosion control devices are in place and functional. During the first spring following construction, OPPC will conduct surveys to evaluate the stability of the right-of-way and the success of the erosion and sediment control structures. Assessments will be done to evaluate the presence of erosion indicators such as rills, gullies, bare ground or evidence of sheet erosion, with observable pedestals, etc. If erosion control structures fail or require maintenance, or if accelerated erosion is observed, OPPC will direct the Contractor to repair them and conduct remedial actions as soon as possible, recognizing weather and soil conditions, and site accessibility. Remedial actions could include supplemental seeding, installation of additional erosion/sediment control materials, maintenance of existing erosion control measures, additional mulching, or use of matting.

During subsidence and/or reseeding activities in spring following pipeline construction, the Contractor will perform reinstallation, repair, and/or maintenance of temporary sediment devices damaged over the winter/spring season. In areas where the project is successfully revegetated as defined in this Plan, the Contractor will be responsible for removal and disposal of the temporary sediment devices. Temporary sediment devices not removed by the Contractor during subsidence and/or reseeding activities in the spring and/or summer following construction will be maintained by OPPC until revegetation has been determined successful.

Erosion control monitoring and maintenance efforts will continue after project construction until successful revegetation is achieved. Throughout the first year following construction, erosion control devices will be checked at locations along the right-of-way in combination with reclamation and revegetation surveys. Erosion control devices will be reinstalled, repaired, and/or maintained as necessary.

During the first growing season following construction and reclamation, OPPC will conduct intensive surveys to assess revegetation success, evaluate erosion control measures, and determine the need for further reclamation. Revegetation monitoring will include evaluation of the following parameters as compared to adjacent (off-right-of-way) vegetation:

- percent total adjacent herbaceous cover (seeded species plus desirable volunteers),
- new or expanded populations of noxious weeds, and
- species composition, including noxious weeds.

Areas with poor germination and/or growth will be evaluated to determine, if possible, the cause of the problem. Reclamation techniques will be modified as necessary to address any identified problems and appropriate remedial measures will be undertaken. The Contractor will be responsible for remediating any problem areas identified by OPPC for the first growing season following construction. Thereafter, OPPC will be responsible for obtaining a reclamation contractor to perform any necessary work.

Both erosion control and revegetation monitoring will be conducted routinely throughout the life of the pipeline to evaluate long-term survival of reestablished vegetation and the effectiveness of erosion control measures with specific attention to problem sites. Erosion control monitoring will be performed in response to significant weather events and/or concurrently with the revegetation

monitoring during the first year following construction.

OPPC will periodically monitor irrigation ditches and irrigated agricultural fields for two years following construction to ensure that field flow characteristics have been maintained. The Contractor will be notified if any remedial work is required.

7.3 Evaluating Reclamation Success

OPPC is responsible for the stabilization and revegetation of areas disturbed as a result of construction for the life of the pipeline. As discussed previously, OPPC will conduct intensive monitoring after the first growing season and routinely thereafter to assess soil stability, revegetation success, and noxious weed infestations until the BLM and OPPC determine that reclamation is successful.

The Reclamation Contractor will reseed any portion of the right-of-way that does not exhibit 50 percent total herbaceous cover (comprised of seeded species plus desirable volunteers) relative to adjacent (off-right-of-way) vegetation after the first complete growing season. Additional seeding will be completed during the next seeding season (fall) and continue until it is considered successful. In the event that first year revegetation is affected by precipitation amounts significantly below the annual average, OPPC may request deferment of additional seeding activities until the following seeding window. OPPC will also coordinate with adjacent companies in the same corridor to address post construction monitoring and remedial actions needed on the entire corridor. However, OPPC can not be held responsible for the actions or inaction of the other companies. OPPC shall coordinate with adjacent companies and with the BLM to identify corrective measures needed to address problem areas and to avoid significant cumulative impact to soils.

The reclaimed right-of-way will be considered stable when the surface appears similar to adjacent undisturbed land and the following accelerated erosion indicators do not exist after the second full growing swason:

- perceptible soil movement (exceeding pre-construction conditions),
- flow pattern development resulting in rills or gullies greater than 3 inches in depth
- trench subsidence or slumping.

Revegetation will be considered successful when the following criteria are met after the second full growing season:

- total herbaceous cover is at least 70 percent of that on adjacent land, and
- species composition is comprised of seeded species and desirable volunteers from adjacent vegetative communities, thus making the revegetated area capable of moving towards a climax successional and ecological state.
- Noxious weeds, as identified in the Noxious Weed Management Plan (Appendix 9) comprise of 15% or less of the total herbaceous cover.

Monitoring of the ROW will continue annually until the above success criteria are met. After that, monitoring will occur every five years for the life of the project.

8.0 RECLAMATION SCHEDULE AND DOCUMENTATION

Reclamation activities will be determined in part by construction schedules and seasonal climatic conditions. Seeding and planting will be coordinated with other reclamation activities to occur as soon after seedbed preparation as possible or when local soil conditions are optimal, most likely in the fall. The Contractor will complete permanent reclamation activities prior to the end of the typical fall planting season. Fall seeding would generally be completed between October 15 and

November 15 prior to prolonged ground frost or at a specific time as requested by the BLM or fee-landowner. If necessary, the BLM or fee-landowner may request spring seeding to occur when the ground thaws and be completed prior to May 15.

Upon completion of reclamation, OPPC's Construction Inspector, Environmental Inspector, BLM representative (or Land Agent on fee property) will perform a final inspection of the right-of-way and ancillary facilities to verify that pre-construction commitments have been satisfied. A copy of the post-reclamation inspection form will be transmitted to the Contractor if any deficiencies or a need for remedial action is noted.

8.1 Post-Construction Reporting

OPPC will compile annual post-construction stormwater inspection report and submit as an annual Reclamation Monitoring Report on or before 31 December of the inspection year for the life of the project. Monitoring of the ROW will continue annually until the above success criteria are met. After that, monitoring and reporting will occur every five years for the life of the project.

This report will include:

- A summary of the general vegetative cover and diversity between the ROW and comparisons to off-ROW vegetation quadrants;
- An assessment of the condition of transplants in riparian areas;
- Identification of areas that require remedial action, including noxious weed treatment;
- Photo documentation of areas where reclamation is both succeeding and the identified problems areas.
- GPS coordinates of all photo locations and areas where additional remedial action is proposed.
- Recommendations and schedule for remedial action(s); and,
- Monitoring forms (see Attachment 4).

DRAFT

ATTACHMENT 1
BEST MANAGEMENT PRACTICES

DRAFT

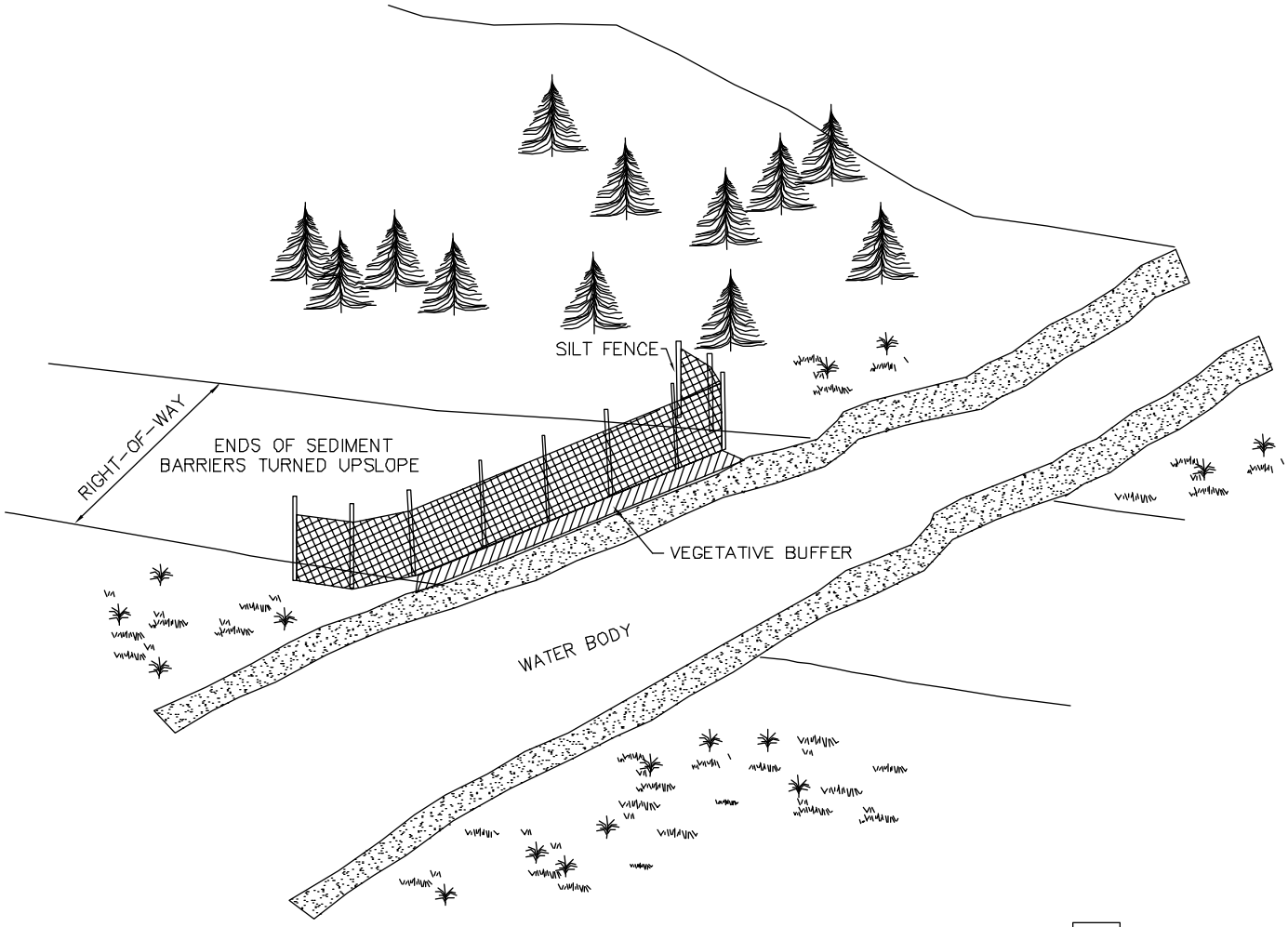

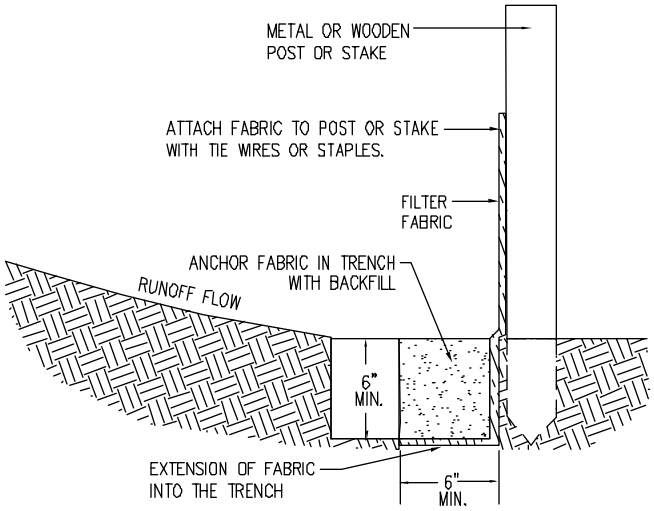

SILT FENCE DETAIL

REVISIONS					
1	ISSUED FOR REVIEW	9/10/07	RC		
NO.	DESCRIPTION	DATE	BY	CHK.	APPR.

DRAWN BY:	RC
CHECKED BY:	CAM
REVIEWED BY:	
APPROVED BY:	
PROJECT MANAGER:	
SCALE:NONE	

OVERLAND PASS PIPELINE COMPANY, LLC
100 WEST 5TH STREET
TULSA, OK 74103-4298

CH2MHILL
TRIGON EPC

SILT FENCE

PROJECT NUMBER	DRAWING NUMBER	REV.
2275-01	OPPL-TYP-200	A

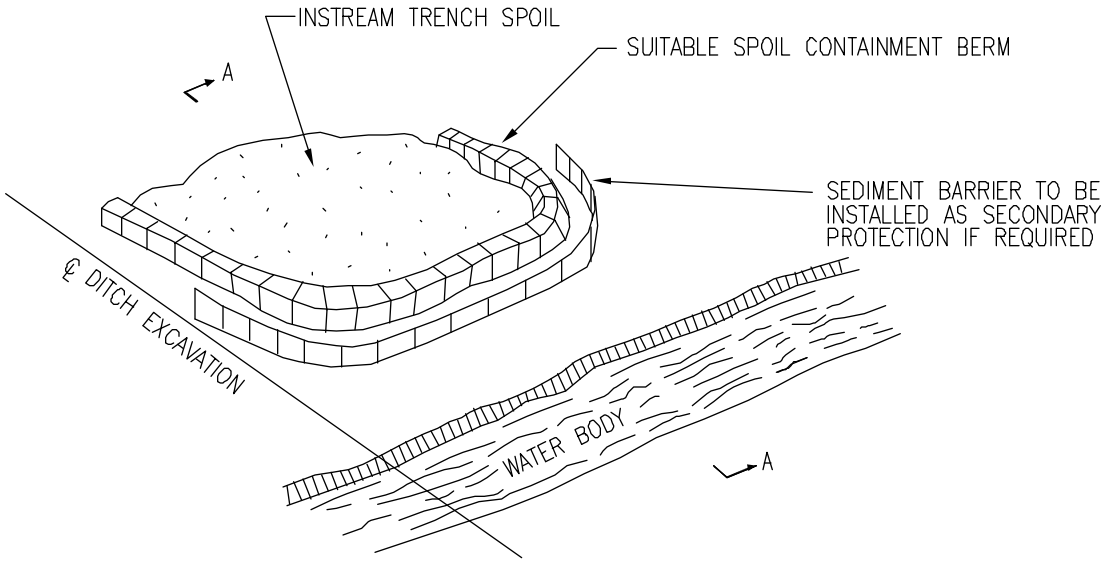

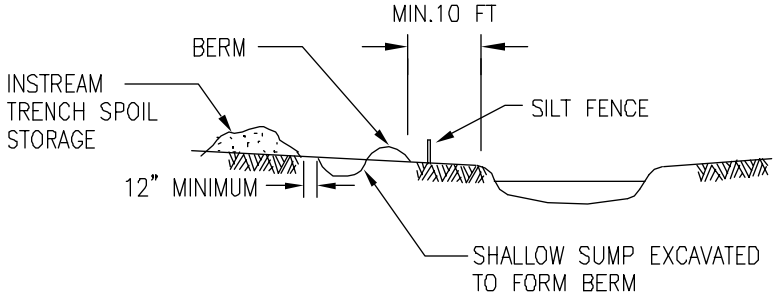

SECTION A–A

NOTE:

1. SOIL CONTAINMENT BERMS ARE TO BE USED WHERE INSTREAM TRENCH SPOIL COULD REENTER THE WATERBODY DIRECTLY OR INDIRECTLY AND WITH SIMULTANEOUS UTILIZATION OF SEDIMENT BARRIERS IF REQUIRED.
2. MATERIAL USED FOR THE CONTAINMENT BERM SHOULD BE A MINIMUM OF 10 FT. FROM THE WATERS EDGE. IT SHOULD BE KEPT TO A HEIGHT WHICH REMAINS STABLE DURING THE CONSTRUCTION PERIOD.
3. CARE SHOULD BE TAKEN THAT THE SPOIL PILE DOES NOT OVERTOP THE CONTAINMENT BERM.
4. THE CONTAINMENT BERM SHOULD BE DISMANTLED AND THE SITE RESTORED TO THE ORIGINAL CONDITION UPON COMPLETION OF THE WATER CROSSING.
5. WHERE POSSIBLE, RIPARIAN VEGETATION SHALL BE LEFT IN PLACE.
6. STAGED MOVEMENT OF INSTREAM SPOIL MAY BE REQUIRED IF QUANTITIES ARE EXCESSIVE.
7. CARE AND ATTENTION MUST BE TAKEN TO ENSURE SPOIL CONTAINMENT BERMS ARE MAINTAINED.
8. FULL CONSIDERATION FOR OVERALL SLOPE STABILITY IS REQUIRED WHEN SELECTING A SPOIL CONTAINMENT LOCATION.

REVISIONS

NO.	DESCRIPTION	DATE	BY	CHK.	APPR.
1	ISSUED FOR REVIEW	9/10/07	RC		

DRAWN BY:	RC
CHECKED BY:	CAM
REVIEWED BY:	
APPROVED BY:	
PROJECT MANAGER:	
SCALE:NONE	

OVERLAND PASS PIPELINE COMPANY, LLC
100 WEST 5TH STREET
TULSA, OK 74103-4298

CH2MHILL
TRIGON EPC

TEMPORARY SOIL CONTAINMENT BERM

PROJECT NUMBER	DRAWING NUMBER	REV.
2275–01	OPPL-TYP-201	A

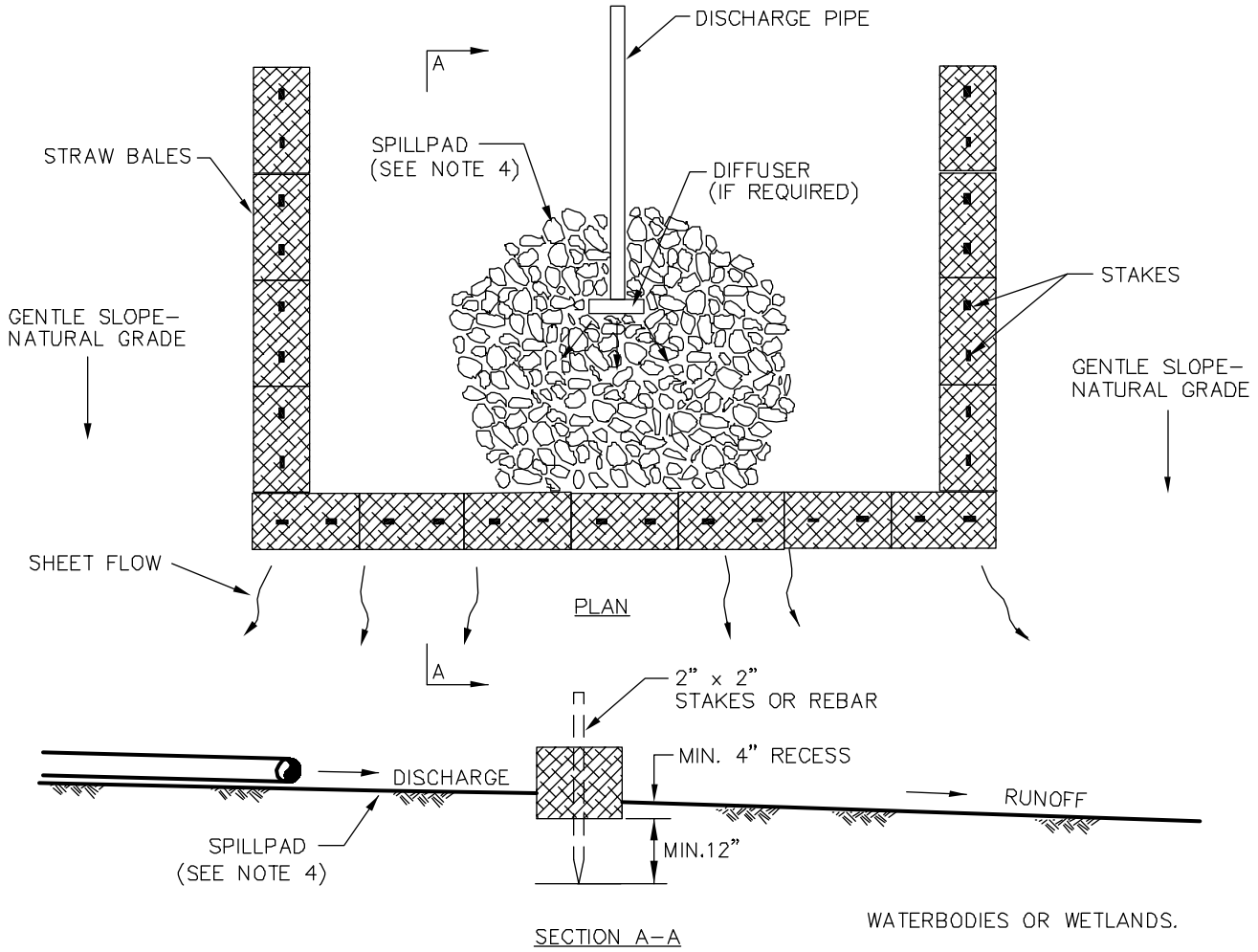

NOTES:

1. INSTALL A STRAW BALE DEWATERING STRUCTURE WHEREVER IT IS NECESSARY AND AS DIRECTED BY THE COMPANY INSPECTOR TO PREVENT THE FLOW OF SILT LADEN WATER INTO WATERBODIES OR WETLANDS.

2. DISCHARGE SITE SHALL BE WELL VEGETATED AND THE TOPOGRAPHY OF THE SITE SUCH THAT WATER WILL FLOW INTO THE DEWATERING STRUCTURE AND AWAY FROM ANY WORK AREAS. THE AREA DOWN SLOPE FROM THE DEWATERING SITE MUST BE REASONABLY PLANE OR STABILIZED BY VEGETATION OR OTHER MEANS TO ALLOW THE FILTERED WATER TO CONTINUE AS SHEET FLOW.

3. ANCHOR STRAW BALES SECURELY IN PLACE WITH TWO WOODEN STAKES OR REBAR. ENTRENCH ("KEY") STRAW BALES INTO THE GROUND TO A DEPTH OF 4".

4. DIRECT THE PUMPED WATER ONTO A STABLE SPILL PAD CONSTRUCTED OF STRAW BALES, ROCK FILL, WEIGHTED TIMBERS, OR WOVEN GEOTEXTILE STAKED TO THE GROUND SURFACE (SUCH AS MIRAFI 600X, TERRAFIX 400W) OR AN APPROVED EQUIVALENT.

5. DISCHARGE RATES SHALL BE SUCH THAT WATER WILL NOT OVERFLOW THE TOP OF THE STRUCTURE.

6. MANUFACTURED FILTER BAGS (OPPL-TYP-206) ARE A SUITABLE ALTERNATIVE TO STRAW BALE STRUCTURES FOR TRENCH DEWATERING.

7. INSTALL A SPLASH PUP (OPPL-TYP-207) IF THE DISCHARGE VELOCITY IS ERODING THE SOILS.

REVISIONS

NO.	DESCRIPTION	DATE	BY	CHK.	APPR.
A	ISSUED FOR REVIEW	9/10/07	RC		

DRAWN BY:	RC
CHECKED BY:	CAM
REVIEWED BY:	
APPROVED BY:	
PROJECT MANAGER:	
SCALE:NONE	

OVERLAND PASS PIPELINE COMPANY, LLC
100 WEST 5TH STREET
TULSA, OK 74103-4298

CH2MHILL
TRIGON EPC

STRAW BALE DEWATERING STRUCTURE - SMALL VOLUME

PROJECT NUMBER	DRAWING NUMBER	REV.
2275-01	OPPL-TYP-202	A

STEP 1. EXCAVATE THE TRENCH

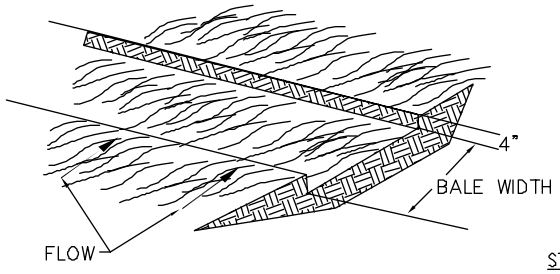

STEP 2. PLACE AND STAKE STRAW BALES.

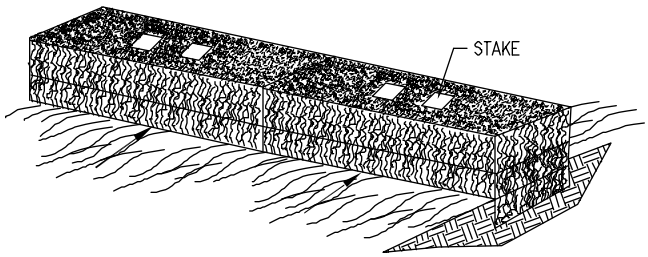

STEP 3. WEDGE LOOSE STRAW BETWEEN BALES.

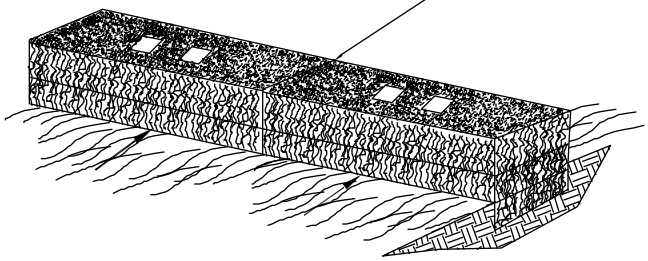

STEP 4. BACKFILL AND COMPACT THE EXCAVATED SOIL.

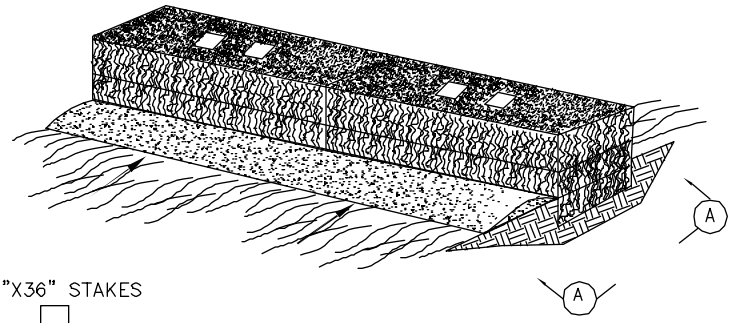

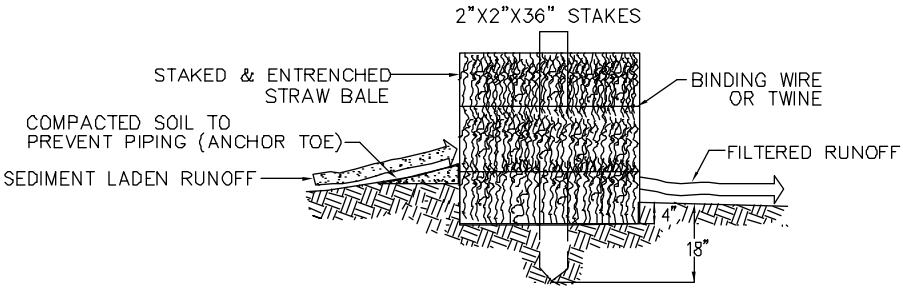

CROSS SECTION A–A

NOTE:
USE CERTIFIED WEED–FREE STRAW.

REVISIONS					
1	ISSUED FOR REVIEW	9/10/07	RC		
NO.	DESCRIPTION	DATE	BY	CHK.	APPR.

DRAWN BY:	RC
CHECKED BY:	CAM
REVIEWED BY:	
APPROVED BY:	
PROJECT MANAGER:	
SCALE:NONE	

OVERLAND PASS PIPELINE COMPANY, LLC
100 WEST 5TH STREET
TULSA, OK 74103-4298

CH2MHILL
TRIGON EPC

STRAW BALE SEDIMENT BARRIER

PROJECT NUMBER	DRAWING NUMBER	REV.
2275–01	OPPL–TYP–202A	A

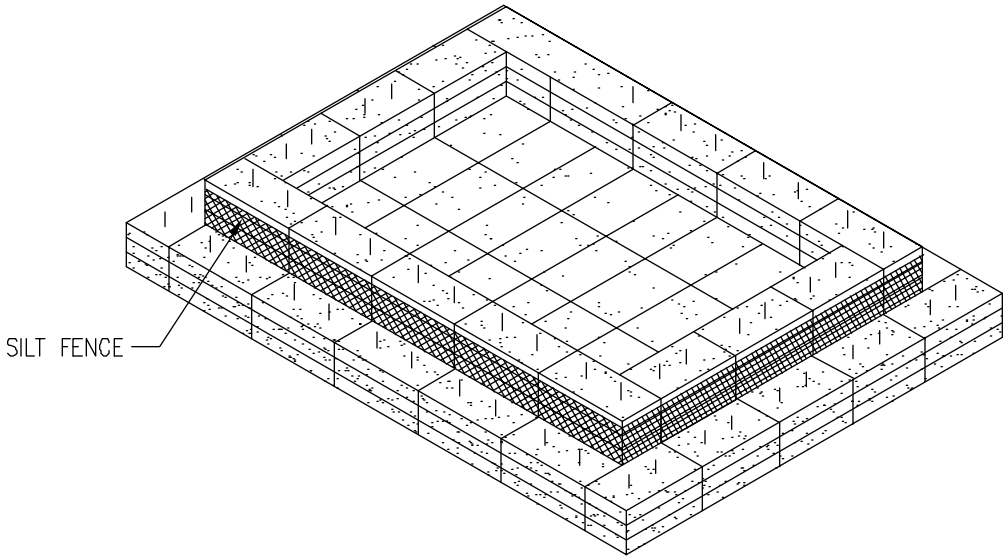

PERSPECTIVE VIEW

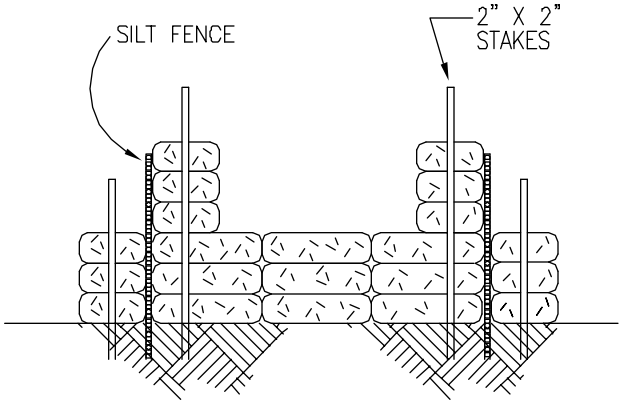

OPTION 1

NOTES:

1. INSTALL A STRAW BALE DEWATERING STRUCTURE WHEREVER IT IS NECESSARY AND AS DIRECTED BY THE COMPANY'S INSPECTOR TO PREVENT THE FLOW OF HEAVILY SILT LADEN WATER INTO WATER BODIES OR WETLANDS.

2. DISCHARGE SITE SHALL BE WELL VEGETATED AND THE TOPOGRAPHY OF THE SITE SUCH THAT WATER WILL FLOW AWAY FROM ANY WORK AREAS. THE AREA DOWN SLOPE FROM THE DEWATERING SITE MUST BE REASONABLY PLANE OR STABILIZED BY VEGETATION OR OTHER MEANS TO ALLOW THE FILTERED WATER TO CONTINUE AS SHEET FLOW.

3. IN AREAS OF HIGHLY ERODIBLE SOILS, LINE ENTIRE STRUCTURE WITH GEOTEXTILE FILTER FABRIC, PLASTIC SHEETING, OR STRAW.

4. THE DIMENSIONS OF THE STRUCTURE SHALL BE DETERMINED IN THE FIELD BASED UPON SITE CONDITIONS.

5. DISCHARGE RATES SHALL BE SUCH THAT WATER WILL NOT OVERFLOW THE TOP OF THE STRUCTURE.

6. NSTALL A SPLASH PUP IF THE DISCHARGE VELOCITY IS EXCESSIVE. (OPPL-TYP-207)

REVISIONS					
A	ISSUED FOR REVIEW	9/10/07	RC		
NO.	DESCRIPTION	DATE	BY	CHK.	APPR.

DRAWN BY:	RC
CHECKED BY:	CAM
REVIEWED BY:	
APPROVED BY:	
PROJECT MANAGER:	
SCALE:NONE	

OVERLAND PASS PIPELINE COMPANY, LLC
100 WEST 5TH STREET
TULSA, OK 74103-4298

CH2MHILL
TRIGON EPC

STRAW BALE DEWATERING STRUCTURE
LARGE VOLUME - OPTION 1 (SHT. 1 OF 2)

PROJECT NUMBER	DRAWING NUMBER	REV.
2275-01	OPPL-TYP-204	A

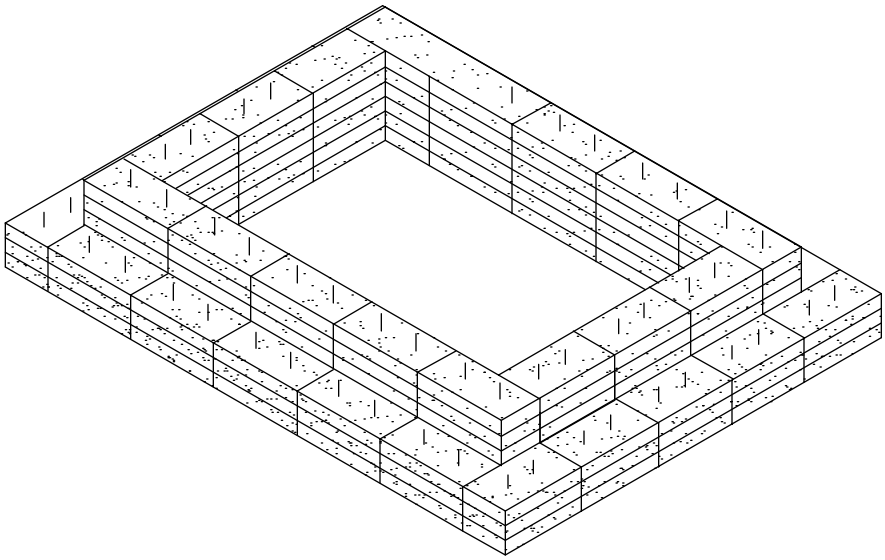

PERSPECTIVE VIEW

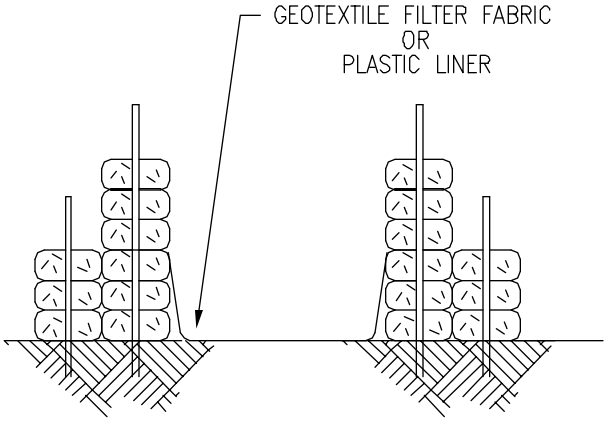

OPTION 2

NOTES:

1. INSTALL A STRAW BALE DEWATERING STRUCTURE WHEREVER IT IS NECESSARY AND AS DIRECTED BY THE COMPANY'S INSPECTOR TO PREVENT THE FLOW OF HEAVILY SILT LADEN WATER INTO WATER BODIES OR WETLANDS.

2. DISCHARGE SITE SHALL BE WELL VEGETATED AND THE TOPOGRAPHY OF THE SITE SUCH THAT WATER WILL FLOW AWAY FROM ANY WORK AREAS. THE AREA DOWN SLOPE FROM THE DEWATERING SITE MUST BE REASONABLY PLANE OR STABILIZED BY VEGETATION OR OTHER MEANS TO ALLOW THE FILTERED WATER TO CONTINUE AS SHEET FLOW.

3. IN AREAS OF HIGHLY ERODIBLE SOILS, LINE ENTIRE STRUCTURE WITH GEOTEXTILE FILTER FABRIC, PLASTIC SHEETING, OR STRAW.

4. THE DIMENSIONS OF THE STRUCTURE SHALL BE DETERMINED IN THE FIELD BASED UPON SITE CONDITIONS.

5. DISCHARGE RATES SHALL BE SUCH THAT WATER WILL NOT OVERFLOW THE TOP OF THE STRUCTURE.

6. INSTALL A SPLASH PUP IF THE DISCHARGE VELOCITY IS EXCESSIVE. (OPPL-TYP-207)

REVISIONS

NO.	DESCRIPTION	DATE	BY	CHK.	APPR.
A	ISSUED FOR REVIEW	9/10/07	RC		

DRAWN BY:	RC
CHECKED BY:	CAM
REVIEWED BY:	
APPROVED BY:	
PROJECT MANAGER:	
SCALE:NONE	

OVERLAND PASS PIPELINE COMPANY, LLC
100 WEST 5TH STREET
TULSA, OK 74103-4298

CH2MHILL
TRIGON EPC

STRAW BALE DEWATERING STRUCTURE
LARGE VOLUME - OPTION 2 (SHT. 2 OF 2)

PROJECT NUMBER	DRAWING NUMBER	REV.
2275-01	OPPL-TYP-204A	A

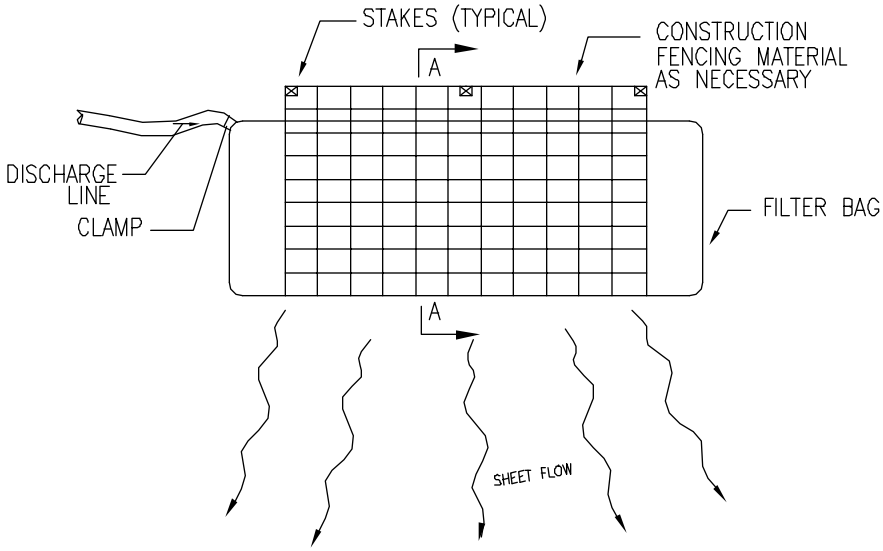

PLAN

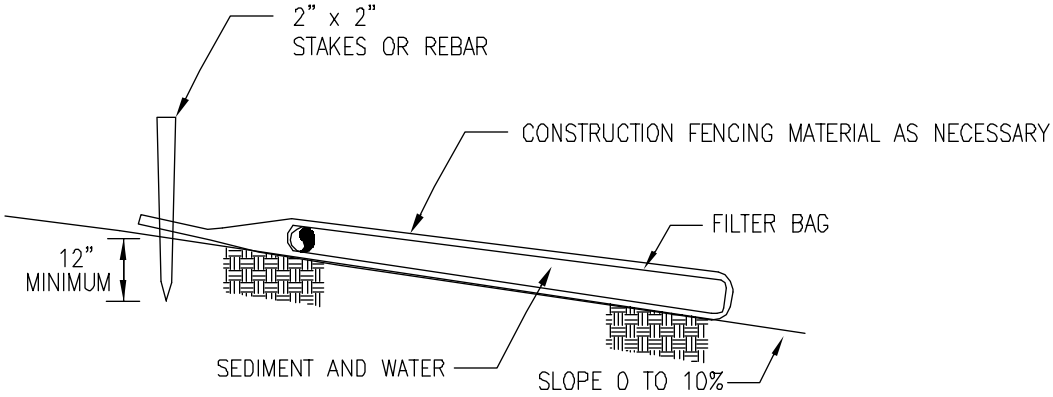

SECTION "A–A"

NOTES:

1. INSTALL A DEWATERING GEOTEXTILE FILTER BAG AS DIRECTED BY THE COMPANY'S INSPECTOR TO PREVENT THE FLOW OF HEAVILY SILT LADEN WATER INTO WATERBODIES OR WETLANDS.

2. DISCHARGE SITE SHALL BE WELL VEGETATED AND THE TOPOGRAPHY OF THE SITE SUCH THAT WATER WILL FLOW AWAY FROM ANY WORK AREAS. THE AREA DOWN SLOPE FROM THE DEWATERING SITE MUST BE REASONABLY PLANE OR STABILIZED BY VEGETATION OR OTHER MEANS TO ALLOW THE FILTERED WATER TO CONTINUE AS SHEET FLOW.

3. TO ATTACH THE DISCHARGE HOSE, CUT A CORNER OF THE BAG, INSERT DISCHARGE HOSE, AND SECURE THE HOSE TO THE BAG.

4. A SINGLE FILTER BAG SHOULD NOT BE USED FOR FLOWS GREATER THAN 600 GALLONS PER MINUTE.

5. REPLACE FILTER BAG BEFORE IT IS COMPLETELY FILLED WITH SEDIMENT. MONITOR DISCHARGE TO AVOID OVER PRESSURING DUE TO PLUGGING, WHICH MAY RESULT IN RUPTURE.

6. DISPOSE OF USED FILTER BAG AND SEDIMENT AT A SITE APPROVED BY THE COMPANY'S INSPECTOR.

REVISIONS

NO.	DESCRIPTION	DATE	BY	CHK.	APPR.
A	ISSUED FOR REVIEW	9/10/07	RC		

DRAWN BY:	RC
CHECKED BY:	CAM
REVIEWED BY:	
APPROVED BY:	
PROJECT MANAGER:	
SCALE:NONE	

OVERLAND PASS PIPELINE COMPANY, LLC
100 WEST 5TH STREET
TULSA, OK 74103-4298

CH2MHILL
TRIGON EPC

GEOTEXTILE FILTER BAG FOR DEWATERING

PROJECT NUMBER	DRAWING NUMBER	REV.
2275-01	OPPL-TYP-206	A

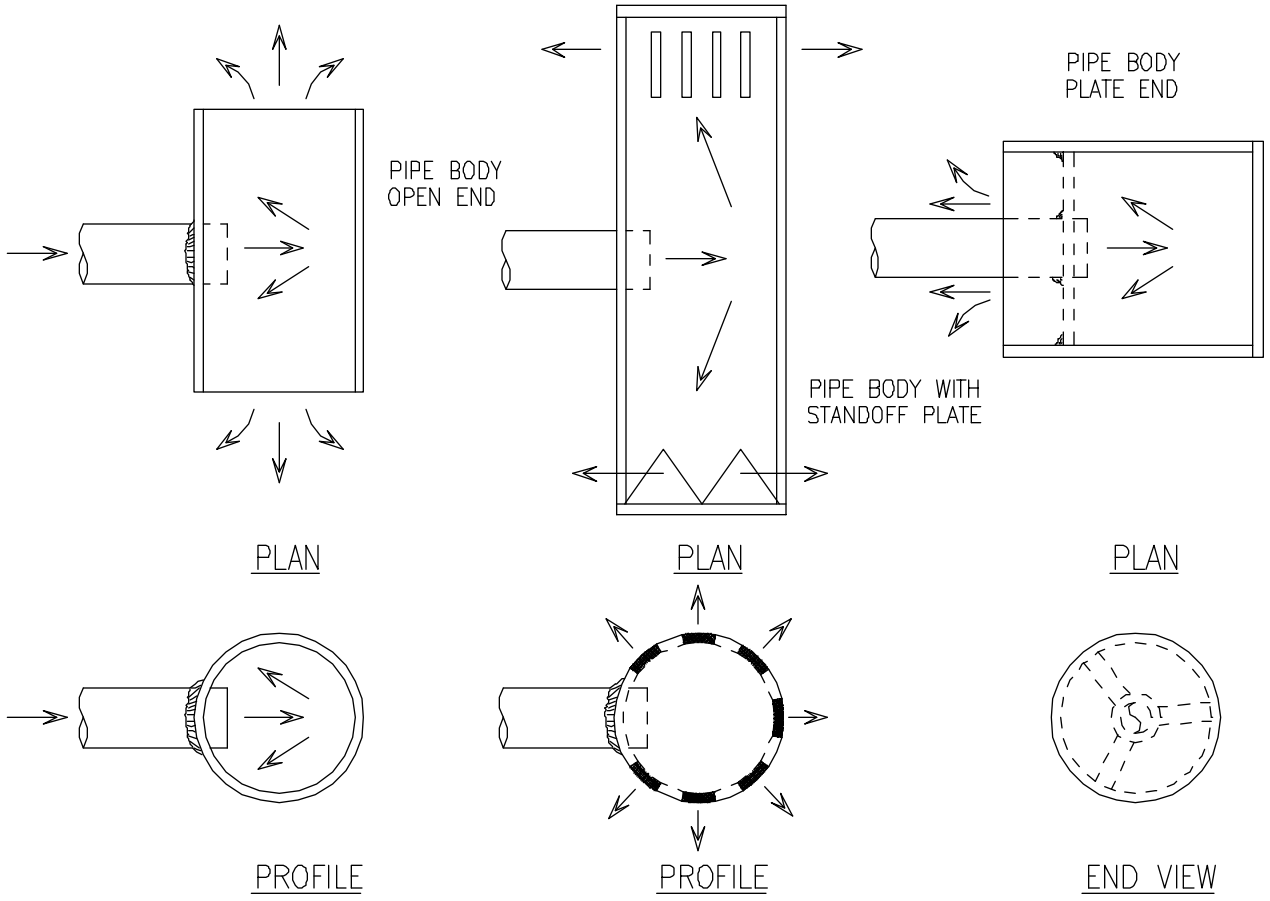

BASIC SPLASH PUP

BASIC SPLASH PLATE

PLATE COMBINATION

NOTES:

1. AN ENERGY DISSIPATER SHALL BE UTILIZED WHENEVER WATER DISCHARGE VELOCITIES MAY CAUSE EROSION.
2. THE DESIGN AND EFFECTIVENESS OF THE ENERGY DISSIPATER IS THE RESPONSIBILITY OF THE CONSTRUCTION CONTRACTOR.
3. ENERGY DISSIPATERS ARE UTILIZED IN CONJUNCTION WITH A DEWATERING STRUCTURE.
4. GEOTEX FABRIC OR EQUIV. SHALL BE PLACED UNDERNEATH AND AROUND DISSIPATER DEVICE TO MIN. EROSION.

REVISIONS

NO.	DESCRIPTION	DATE	BY	CHK.	APPR.
A	ISSUED FOR REVIEW	9/10/07	RC		

DRAWN BY:	RC
CHECKED BY:	CAM
REVIEWED BY:	
APPROVED BY:	
PROJECT MANAGER:	
SCALE:NONE	

OVERLAND PASS PIPELINE COMPANY, LLC
100 WEST 5TH STREET
TULSA, OK 74103-4298

CH2MHILL
TRIGON EPC

SPLASH PUP FOR TEST WATER DISCHARGE

PROJECT NUMBER	DRAWING NUMBER	REV.
2275-01	OPPL-TYP-207	A

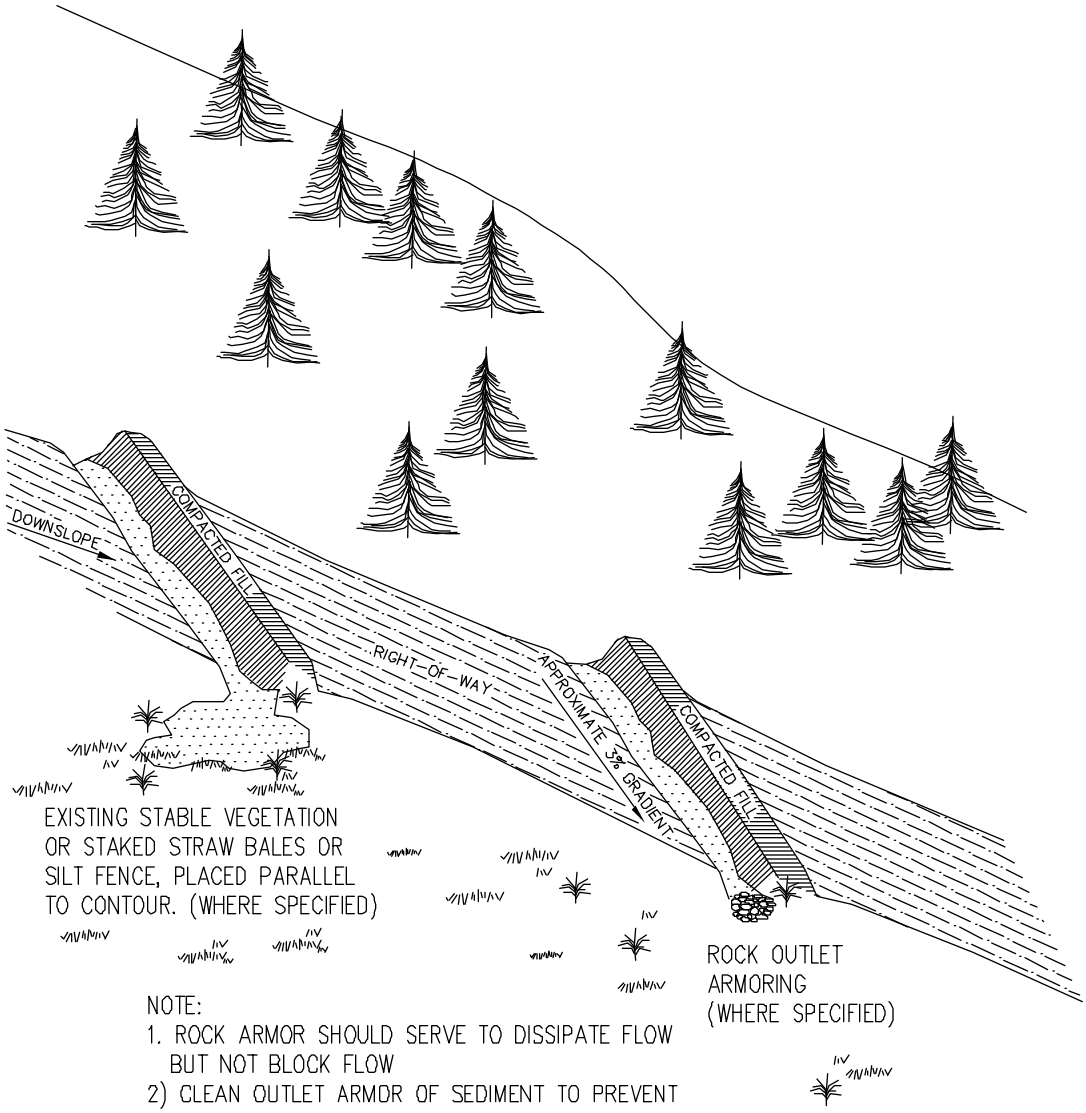

NOTE:
1. ROCK ARMOR SHOULD SERVE TO DISSIPATE FLOW BUT NOT BLOCK FLOW
2) CLEAN OUTLET ARMOR OF SEDIMENT TO PREVENT LOSS OF FUNCTION.

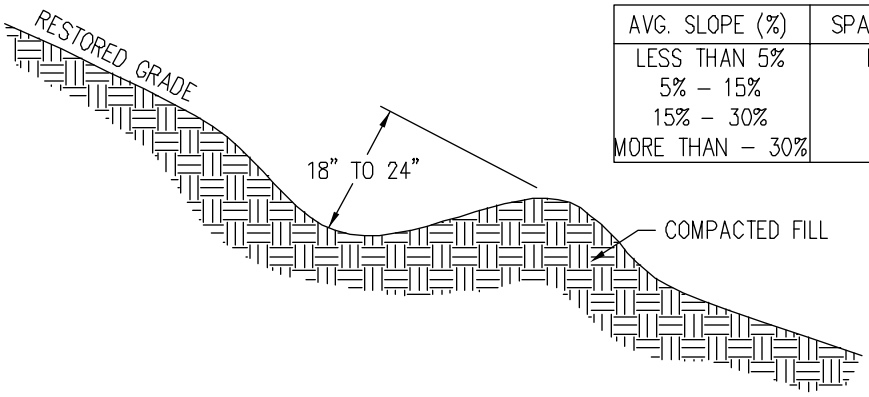

AVG. SLOPE (%)	SPACING (S)
LESS THAN 5%	NONE
5% – 15%	300'
15% – 30%	200'
MORE THAN – 30%	100'

CROSS-SECTION

REVISIONS					
A	ISSUED FOR REVIEW	9/10/07	RC		
NO.	DESCRIPTION	DATE	BY	CHK.	APPR.

DRAWN BY:	RC
CHECKED BY:	CAM
REVIEWED BY:	
APPROVED BY:	
PROJECT MANAGER:	
SCALE:NONE	

OVERLAND PASS PIPELINE COMPANY, LLC
100 WEST 5TH STREET
TULSA, OK 74103-4298

CH2MHILL
TRIGON EPC

SLOPE BREAKERS

PROJECT NUMBER	DRAWING NUMBER	REV.
2275-01	OPPL-TYP-208	A

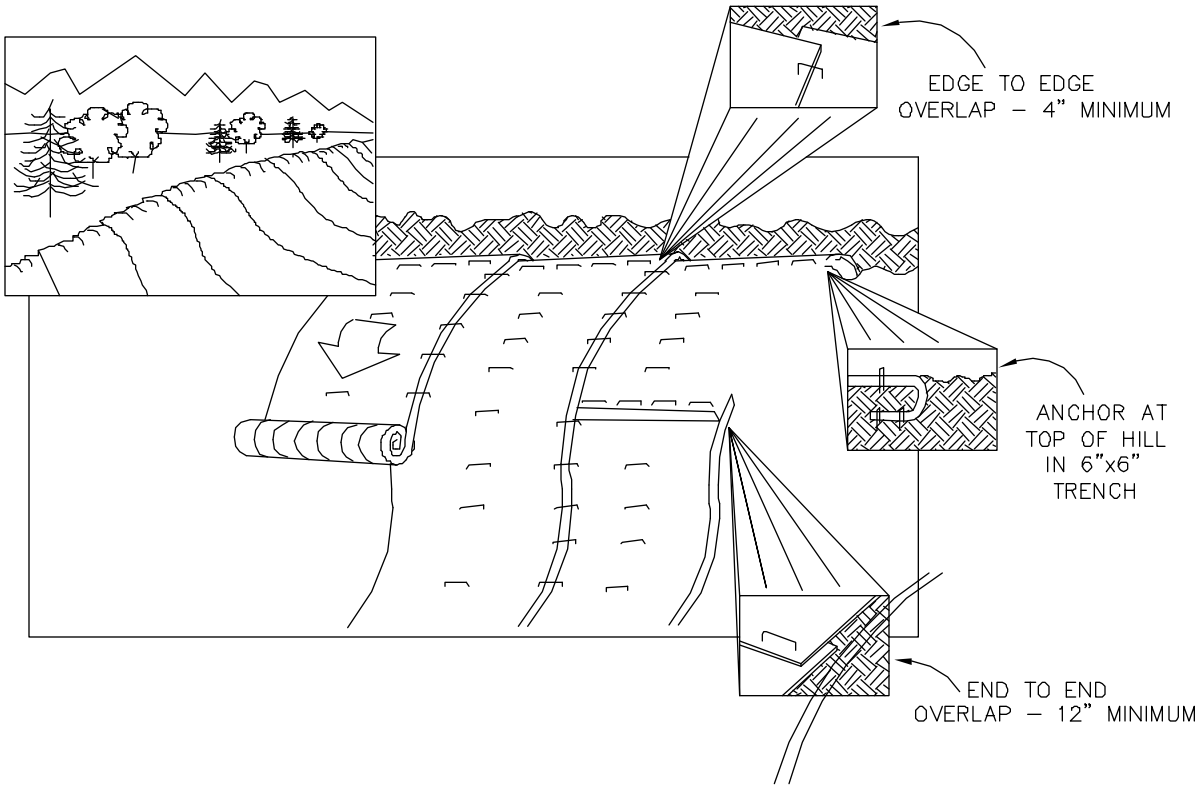

NOTES:

1. EROSION CONTROL MATTING (BLANKETS) SHALL BE USED AS DIRECTED BY THE ENVIRONMENTAL INSPECTOR.

2. THE EROSION CONTROL MAT SHALL BE MADE OF BIODEGRADABLE NATURAL FIBER, UNLESS OTHERWISE APPROVED BY THE ENVIRONMENTAL INSPECTOR. EROSION CONTROL MATS SHALL BE FURNISHED IN CONTINUOUS ROLLS OF 30' OR GREATER WITH A MINIMUM WIDTH OF 4'.

3. THE EROSION CONTROL MAT SHALL BE BON TERRA CS2 OR NORTH AMERICAN GREEN SC150 OR SC150BN OR A COMPANY APPROVED EQUIVALENT WITH THESE SPECIFICATIONS:
   - 70% STRAW AND 30% COCONUT (COIR) FABRIC
   - WEIGHT OF 0.5 LBS/YD
   - UNDERLAIN WITH PHOTODEGRADABLE PLASTIC NETTING OR NATURAL FIBER NET AND OVERLAIN WITH UV STABILIZED PLASTIC
   - NETTING OR NATURAL FIBER NET. SHALL BE DRIVEN INTO THE

4. MATTING SHALL BE INSTALLED ACCORDING TO MANUFACTURER'S SPECIFICATIONS OR AS STATED BELOW:
   - THE TOP OF THE BLANKET SHALL EXTEND 3' PAST THE UPPER EDGE OF THE SLOPE.
   - ANCHOR ("KEY") THE UPPER EDGE OF THE BLANKET INTO THE SLOPE IN A 6" WIDE BY 6" DEEP TRENCH. BLANKET ROLL
   - SHALL BE ON UPHILL SIDE OF TRENCH. DOUBLE STAPLE EVERY 12" BEFORE BACKFILLING AND COMPACTING TRENCH.
   - BRING MAT ROLL BACK OVER THE TOP OF THE TRENCH AND CONTINUE TO ROLL DOWN SLOPE. STAPLE EVERY 12" WHERE
   - MAT EXITS THE TRENCH AT TOP OF SLOPE.
   - THE EDGES OF PARALLEL BLANKETS SHALL BE OVERLAPPED A MIN. OF 4" AND STAPLED EVERY 12" THE LENGTH OF THE EDGE.
   - WHEN BLANKETS ARE SPLICED DOWN SLOPE TO ADJOINING MATS, THE UPPER BLANKET SHALL BE PLACED OVER THE LOWER
   - MAT (SHINGLE STYLE) WITH APPROXIMATELY 12" OF OVERLAP. STAPLE THROUGH THE OVERLAPPED AREA EVERY 12".
   - STAPLE DOWN THE CENTER OF THE BLANKET(S). TWO STAPLES IN EVERY SQUARE YARD.
   - STAPLE ACROSS THE BOTTOM OF THE EROSION CONTROL MATTING EVERY 12".

5. THE EROSION CONTROL MATTING SHALL MAKE UNIFORM CONTACT WITH THE SOIL UNDERNEATH WITH NO BRIDGING OF RILLS OR GULLIES.

6. MONITOR FOR WASHOUTS, STAPLE INTEGRITY OR MAT MOVEMENT. PRIOR TO COMPLETION OF CONSTRUCTION, REPLACE OR REPAIR AS NECESSARY.

REVISIONS

NO.	DESCRIPTION	DATE	BY	CHK.	APPR.
A	ISSUED FOR REVIEW	9/10/07	RC		

DRAWN BY:	RC
CHECKED BY:	CAM
REVIEWED BY:	
APPROVED BY:	
PROJECT MANAGER:	
SCALE:NONE	

ONEOK PARTNERS

ONEOK NGL Gathering, L.L.C.
100 West 5th Street
Tulsa, OK 74103-4298

CH2MHILL
TRIGON EPC

EROSION CONTROL MATTING UPLAND SLOPES

PROJECT NUMBER	DRAWING NUMBER	REV.
2275–01	OPPL-TYP-209	A

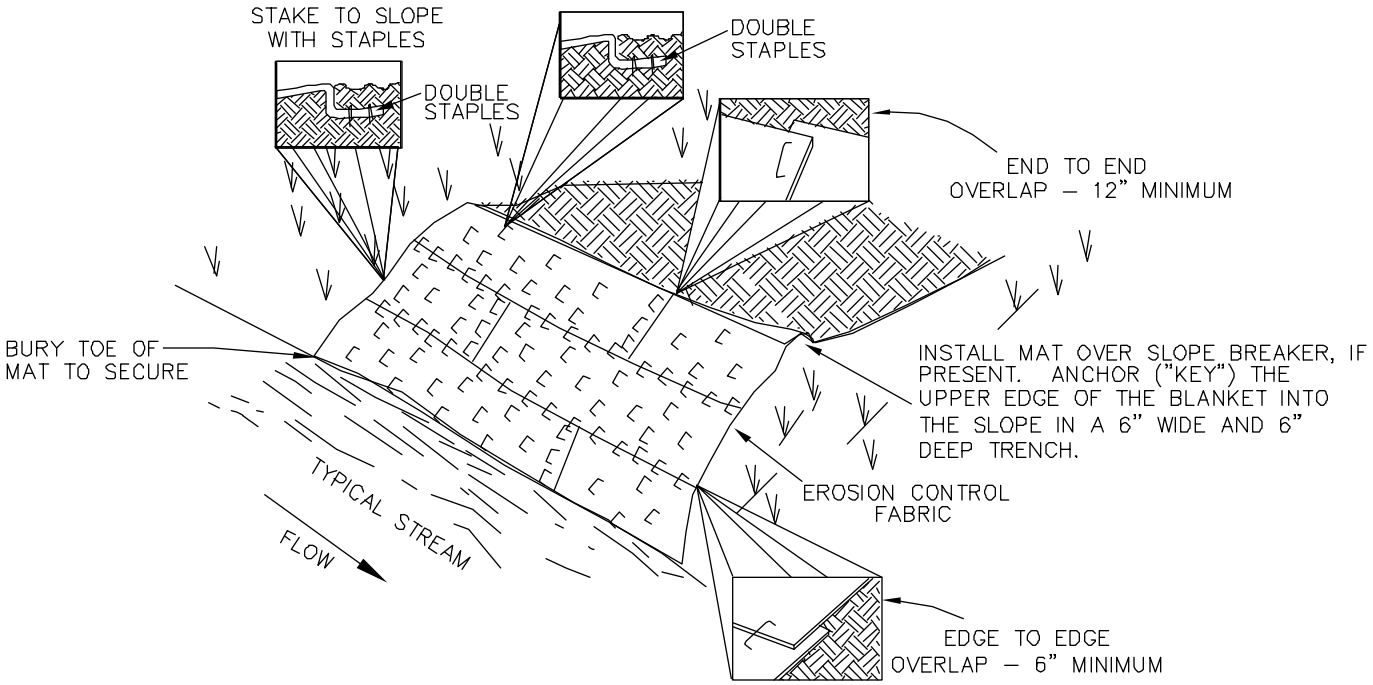

NOTES:

1. EROSION CONTROL MATTING (BLANKETS) SHALL BE PLACED ON THE BANKS OF ALL WATERBODIES WHERE VEGETATION HAS BEEN REMOVED AND/OR AS DIRECTED BY THE COMPANY INSPECTOR.

2. THE TYPE OF EROSION CONTROL MAT SHALL BE MADE OF BIODEGRADABLE NATURAL FIBERS, UNLESS OTHERWISE APPROVED BY THE COMPANY INSPECTOR. EROSION CONTROL MATS SHALL BE FURNISHED IN CONTINUOUS ROLLS OF 30' OR GREATER WITH A MINIMUM WIDTH OF 4'.

3. THE EROSION CONTROL MAT SHALL BE BON TERRA CF7 OR A COMPANY APPROVED EQUIVALENT WITH THESE SPECIFICATIONS:
   - 100% WOVEN COCONUT (COIR) FABRIC.
   - WEIGHT OF 1.2 LBS/YD.
   - 50% OPEN AREA.

4. MATTING SHALL BE INSTALLED ACCORDING TO MANUFACTURE SPECIFICATIONS OR AS STATED BELOW:
   - THE TOP OF THE BLANKET SHALL EXTEND A MINIMUM OF 2' PAST THE UPPER EDGE OF THE ORDINARY HIGH WATER MARK. IF A SLOPE BREAKER IS PRESENT ON THE APPROACH SLOPE, THE BLANKET SHALL EXTEND OVER THE CREST AND THE THROUGH OF THE SLOPE BREAKER.
   - INSTALL BLANKET(S) ACROSS THE SLOPE IN THE DIRECTION OF WATER FLOW.
   - ANCHOR ("KEY") THE UPSTREAM EDGE OF THE BLANKET(S) INTO THE SLOPE USING A 6" WIDE BY 6" DEEP TRENCH. DOUBLE STAPLE EVERY 12" BEFORE BACKFILLING AND COMPACTING TRENCH.
   - ANCHOR ("KEY") THE UPPER EDGE OF THE BLANKET INTO THE SLOPE IN A 6" WIDE BY 6" DEEP TRENCH. DOUBLE STAPLE EVERY 12" BEFORE BACKFILLING AND COMPACTING TRENCH.
   - THE EDGES OF PARALLEL BLANKETS SHALL BE OVERLAPPED A MINIMUM OF 6". THE UPPER BLANKET SHALL BE PLACED OVER THE LOWER BLANKET (SHINGLE STYLE) AND STAPLED EVERY 12" THE LENGTH OF THE EDGE.
   - WHEN BLANKET ENDS, THE UPSTREAM BLANKET SHALL BE PLACED OVER THE DOWNSTREAM BLANKET (SHINGLE STYLE) WITH AT LEAST 12" OF OVERLAP. STAPLE THROUGH THE OVERLAPPED AREA EVERY 12".
   - STAPLE DOWN THE CENTER OF THE BLANKET(S) WITH THREE STAPLES IN EVERY SQUARE YARD.
   - STAPLE ACROSS THE BOTTOM OF THE EROSION CONTROL MATTING EVERY 12".

5. THE EROSION CONTROL MATTING SHALL MAKE UNIFORM CONTACT WITH THE SOIL UNDERNEATH WITH NO BRIDGING OF RILLS OR GULLIES.

6. MONITOR FOR WASHOUTS, STAPLE INTEGRITY OR MAT MOVEMENT PRIOR TO COMPLETION OF CONSTRUCTION. REPLACE OR REPAIR AS NECESSARY.

REVISIONS

NO.	DESCRIPTION	DATE	BY	CHK.	APPR.
A	ISSUED FOR REVIEW	9/10/07	RC		

DRAWN BY:	RC
CHECKED BY:	CAM
REVIEWED BY:	
APPROVED BY:	
PROJECT MANAGER:	
SCALE:NONE	

OVERLAND PASS PIPELINE COMPANY, LLC
100 WEST 5TH STREET
TULSA, OK 74103-4298

CH2MHILL
TRIGON EPC

EROSION CONTROL MATTING STREAMBANKS

PROJECT NUMBER	DRAWING NUMBER	REV.
2275–01	OPPL-TYP-210	A

AVG. SLOPE (%)	SPACING (S)
LESS THAN 5%	NONE
5% – 15%	300'
15% – 30%	200'
MORE THAN – 30%	100'

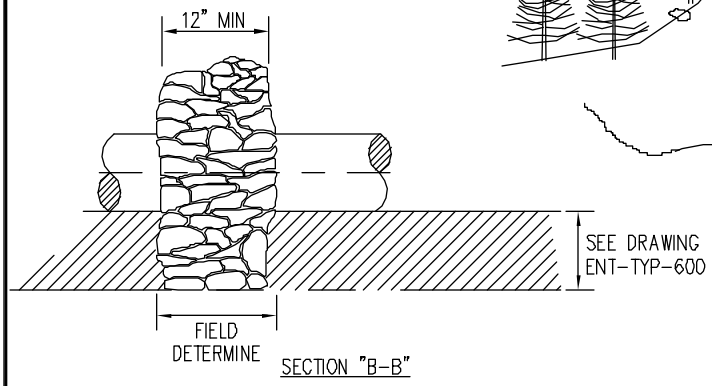

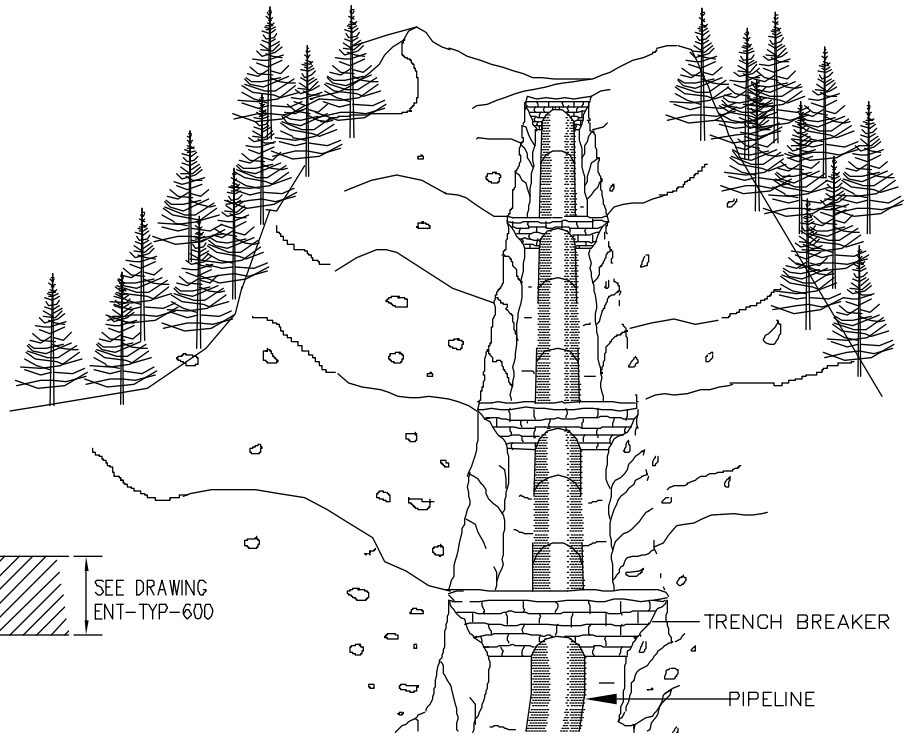

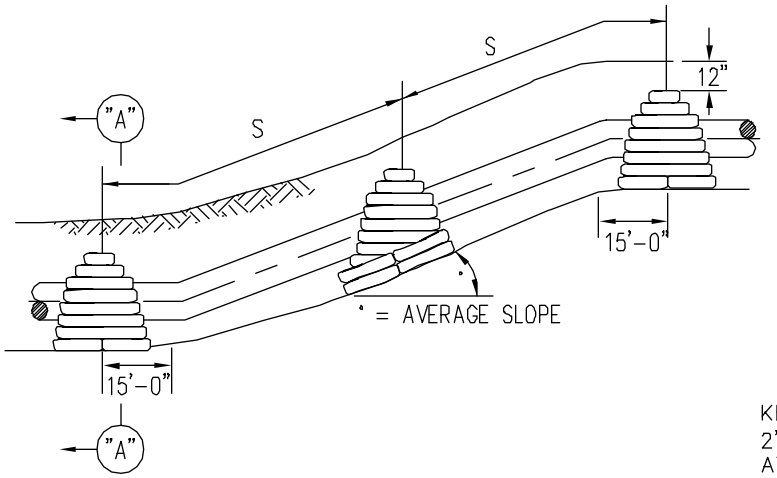

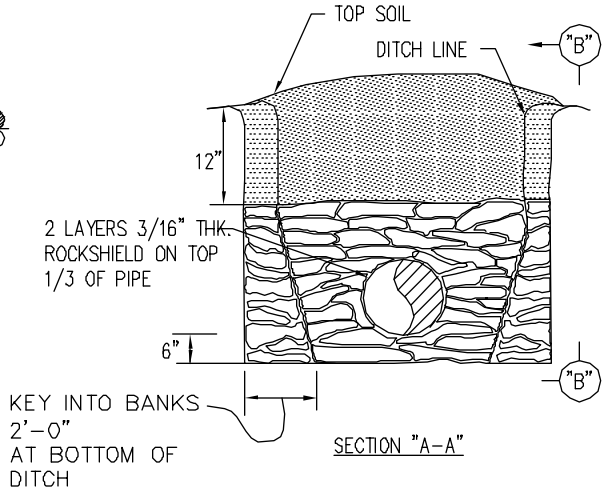

NOTES:

1. TRENCH BREAKERS SHALL BE INSTALLED:
   - ON SLOPES ALONG THE TRENCH LINE WHERE THE NATURAL DRAINAGE PATTERN, PROFILE, AND TYPE OF BACKFILL MATERIAL MAY RESULT IN LOSS OF BACKFILL MATERIAL OR ALTERATION OF THE NATURAL PATTERN
   - AT THE BASE OF SLOPES ADJACENT TO WATERBODIES AND WETLANDS
   - WHERE NEEDED TO AVOID DRAINING A WETLAND
   - ON UPLAND SLOPES, AT THE SAME SPACING AS SLOPE BREAKERS AND UP SLOPE OF SLOPE BREAKERS
   - IN AGRICULTURAL ≥ 5 PERCENT LAND AND RESIDENTIAL AREAS WHERE PERMANENT SLOPE BREAKERS ARE NOT TYPICALLY INSTALLED, AT THE SAME SPACING AS IF PERMANENT SLOPE BREAKERS WHERE REQUIRED.
2. OPEN WEAVE HEMP OR JUTE SACKS SHALL BE FILLED WITH A MINIMUM OF 55lbs IN A MIXTURE OF SAND & SUBSOIL.
3. BREAKER SPACING AND CONFIGURATION, INCLUDING THE NEED TO KEY THE BREAKER INTO THE UNDISTURBED SOIL AT THE SIDES AND BOTTOM OF THE TRENCH, MAY CHANGE AS DETERMINED BY COMPANY ENGINEER OR SIMILARLY QUALIFIED PROFESSIONAL.
4. ALL MATERIALS SHALL BE SUPPLIED BY CONTRACTOR.
5. INSTALL ONE TRENCH BREAKER UNDER EVERY SLOPE BREAKER.

REVISIONS					
A	ISSUED FOR REVIEW	9/10/07	RC		
NO.	DESCRIPTION	DATE	BY	CHK.	APPR.

DRAWN BY:	RC
CHECKED BY:	CAM
REVIEWED BY:	
APPROVED BY:	
PROJECT MANAGER:	
SCALE:NONE	

OVERLAND PASS PIPELINE COMPANY, LLC
100 WEST 5TH STREET
TULSA, OK 74103-4298

CH2MHILL
TRIGON EPC

TRENCH BREAKER REQUIREMENTS

PROJECT NUMBER	DRAWING NUMBER	REV.
2275-01	OPPL-TYP-110	A

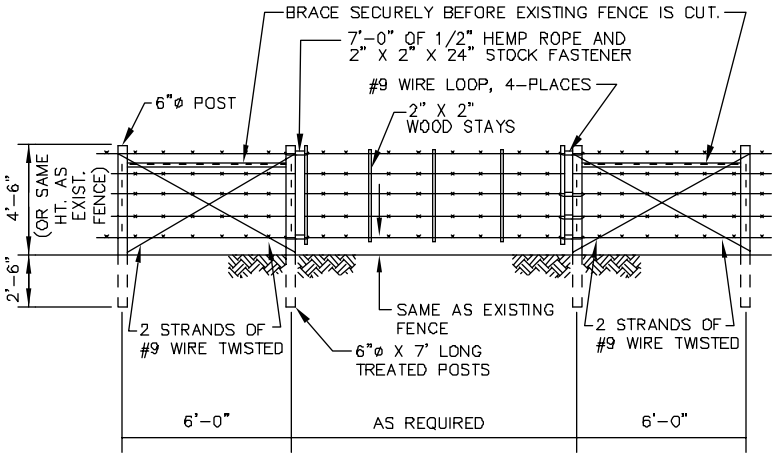

TEMPORARY BARBED WIRE FENCE GATE

NOTE:

1. CONTRACTOR SHALL FURNISH ALL MATERIAL TO BUILD TEMPORARY GATE TO MATCH EXISTING FENCE.
2. CONTRACTOR SHALL REBUILD FENCE TO ORIGINAL CONDITION AND SHALL REMOVE ALL TEMPORARY MATERIALS. HOWEVER, BRACE WILL REMAIN AS PART OF THE PERMANENT INSTALLATION. (SEE FENCE RESTORATION DETAIL)
3. CONTRACTOR RESPONSIBLE FOR THE CONDITION AND STRUCTURAL INTEGRITY OF FENCING AND GATE THROUGHOUT THE DURATION OF ITS USE.

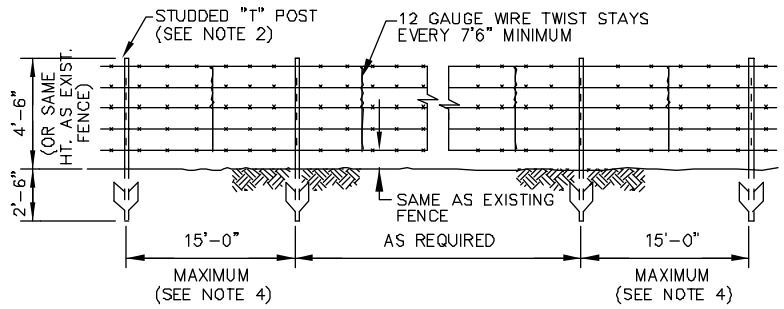

TEMPORARY BARBED WIRE FENCE

NOTE:

1. CONTRACTOR SHALL FURNISH ALL MATERIAL TO BUILD TEMPORARY FENCE.
2. ONLY HEAVY DUTY DARK GREEN STUDDED STEEL "T" POSTS WITH ENAMEL PAINT ALUMINUM TIPS AND THREE STUD RIVETED (MINIMUM) ANCHOR PLATE SHALL BE USED.
3. CONTRACTOR SHALL INSTALL AT LOCATIONS DESIGNATED BY COMPANY INSPECTOR.
4. POST SPACING AS SHOWN UNLESS DIRECTED OTHERWISE BY COMPANY INSPECTOR.
5. CONTRACTOR RESPONSIBLE FOR THE CONDITION AND STRUCTURAL INTEGRITY OF FENCING THROUGHOUT THE DURATION OF ITS USE.

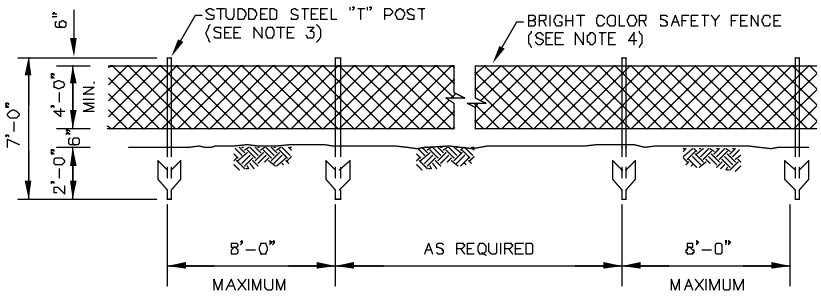

SAFETY/EXCLUSION FENCE

NOTE:

1. ALL MATERIAL SHALL BE FURNISHED BY CONTRACTOR.
2. CONTRACTOR SHALL INSTALL AT LOCATIONS DESIGNATED BY COMPANY INSPECTOR.
3. ONLY HEAVY DUTY STUDDED STEEL "T" POSTS, PREFERABLY PAINTED A BRIGHT COLOR, SHALL BE USED.
4. ONLY DURABLE, WIND RESISTANT, HIGH VISIBILITY FENCING FABRIC FABRICATED OF HIGH DENSITY POLYETHYLENE OR SIMILAR MATERIALS SHALL BE USED.
5. FENCING INSTALLED IN CONJUNCTION WITH EXTENDED DURATION CONSTRUCTION AT ROADWAYS WILL ADDITIONALLY HAVE REFLECTIVE PROPERTIES.
6. "T" POSTS SHALL BE INSTALLED IN STABLE SOIL A MINIMUM OF 12" FROM THE EDGE OF EXCAVATIONS.
7. FABRIC TO BE ATTACHED TO "T" POSTS WITH A MINIMUM OF TWO (2) 16 GAGE TIE WIRES PER POST. ALTERNATELY, POST CAN BE "WOVEN" INTO FABRIC AND A SINGLE TIE WIRE MAY BE INSTALLED.
8. CONTRACTOR RESPONSIBLE FOR THE CONDITION AND STRUCTURAL INTEGRITY OF FENCING THROUGHOUT THE DURATION OF ITS USE.

REVISIONS

NO.	DESCRIPTION	DATE	BY	CHK.	APPR.
A	ISSUED FOR REVIEW	9/10/07	RC		

DRAWN BY:	RC
CHECKED BY:	CAM
REVIEWED BY:	
APPROVED BY:	
PROJECT MANAGER:	
SCALE:NONE	

OVERLAND PASS PIPELINE COMPANY, LLC
100 WEST 5TH STREET
TULSA, OK 74103-4298

CH2MHILL
TRIGON EPC

TEMPORARY FENCE AND GATE

PROJECT NUMBER	DRAWING NUMBER	REV.
2275-01	OPPL-TYP-111	A

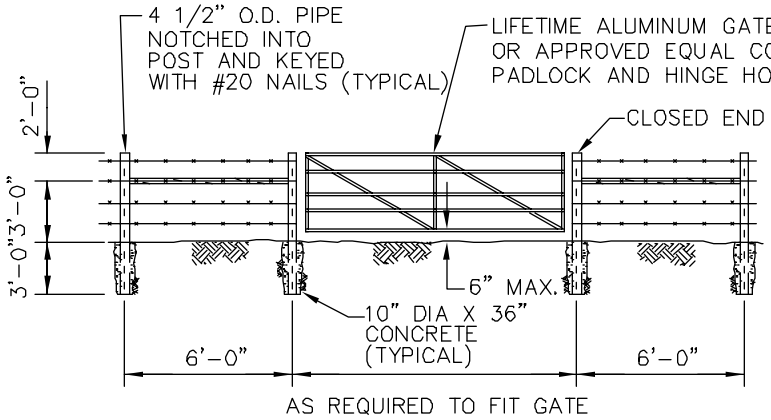

PERMANENT RIGHT-OF-WAY FENCE GATE

NOTES:
1. ALL MATERIAL SHALL BE FURNISHED BY CONTRACTOR.
2. CONTRACTOR SHALL INSTALL AT LOCATIONS DESIGNATED BY COMPANY CORPORATION INSPECTOR.
3. CONTRACTOR SHALL PROVIDE LATCH OR STOP TO PREVENT GATE FROM SWINGING OUT OVER ROADWAY AT LOCATIONS WHERE GATE IS INSTALLED PARALLEL TO AND 14' OR LESS FROM ROADWAY.
4. POSTS AND BRACES SHALL BE PAINTED IN ACCORDANCE WITH SPECIFICATIONS.

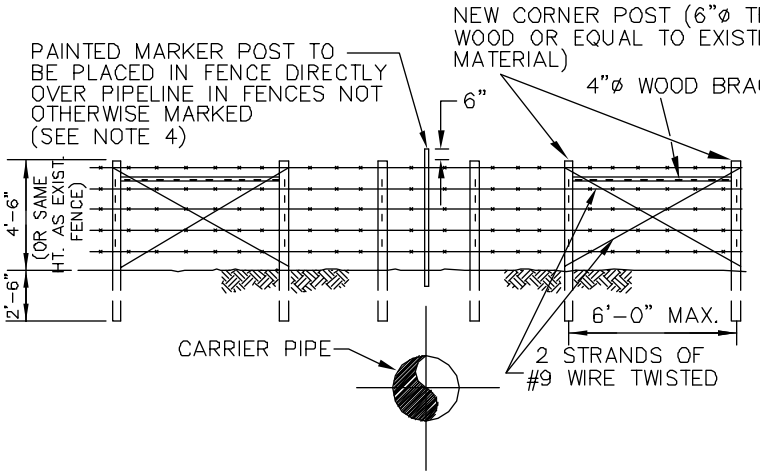

FENCE RESTORATION AND GROUND MARKER INSTALLATION AT PROPERTY LINES

NOTES:
1. CONTRACTOR SHALL FURNISH ALL NECESSARY MATERIAL TO RESTORE FENCE TO ORIGINAL CONDITION.
2. POSTS, WIRE AND OTHER MATERIAL SHALL BE OF EQUAL OR NEW MATERIAL TO MATCH EXISTING FENCE.
3. BRACE SPAN TO BE CONSTRUCTED ON EACH SIDE OF PIPELINE CROSSING PRIOR TO INITIAL DISMANTLING OF FENCE. BRACE SPAN TO REMAIN IN PLACE WHEN FENCE IS RESTORED.
4. MARKERS TO BE INSTALLED AT PROPERTY LINE FENCES ONLY.

NOTE:
1. CONTRACTOR SHALL FURNISH ALL MATERIAL TO BUILD PERMANENT FENCE.
2. ONLY HEAVY DUTY DARK GREEN STUDDED STEEL "T" POSTS WITH ENAMEL PAINT ALUMINUM TIPS AND THREE STUD RIVETED (MINIMUM) ANCHOR PLATE SHALL BE USED.
3. CONTRACTOR SHALL INSTALL AT LOCATIONS DESIGNATED BY COMPANY INSPECTOR.
4. POST SPACING TO MATCH PRE EXISTING SPACING FOR PERMANENT REPAIRS. POST SPACING FOR NEW PERMANENT FENCING TO BE AS SHOWN UNLESS DIRECTED OTHERWISE BY THE COMPANY INSPECTOR.

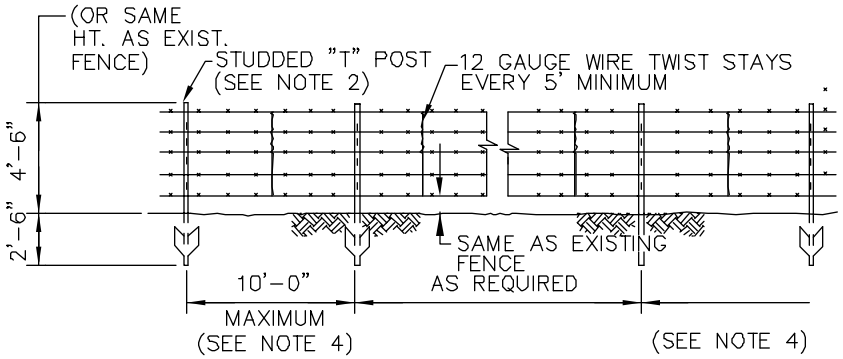

PERMANENT BARBED WIRE FENCE

REVISIONS					
1	ISSUED FOR REVIEW	9/10/07	RC		
NO.	DESCRIPTION	DATE	BY	CHK.	APPR.

DRAWN BY:	RC
CHECKED BY:	CAM
REVIEWED BY:	
APPROVED BY:	
PROJECT MANAGER:	
SCALE:NONE	

OVERLAND PASS PIPELINE COMPANY, LLC
100 WEST 5TH STREET
TULSA, OK 74103-4298

CH2MHILL
TRIGON EPC

PERMANENT FENCE AND GATE

PROJECT NUMBER	DRAWING NUMBER	REV.
2275-01	OPPL-TYP-112	A

ATTACHMENT 2
WATERBODIES AND WETLANDS CROSSINGS

DRAFT

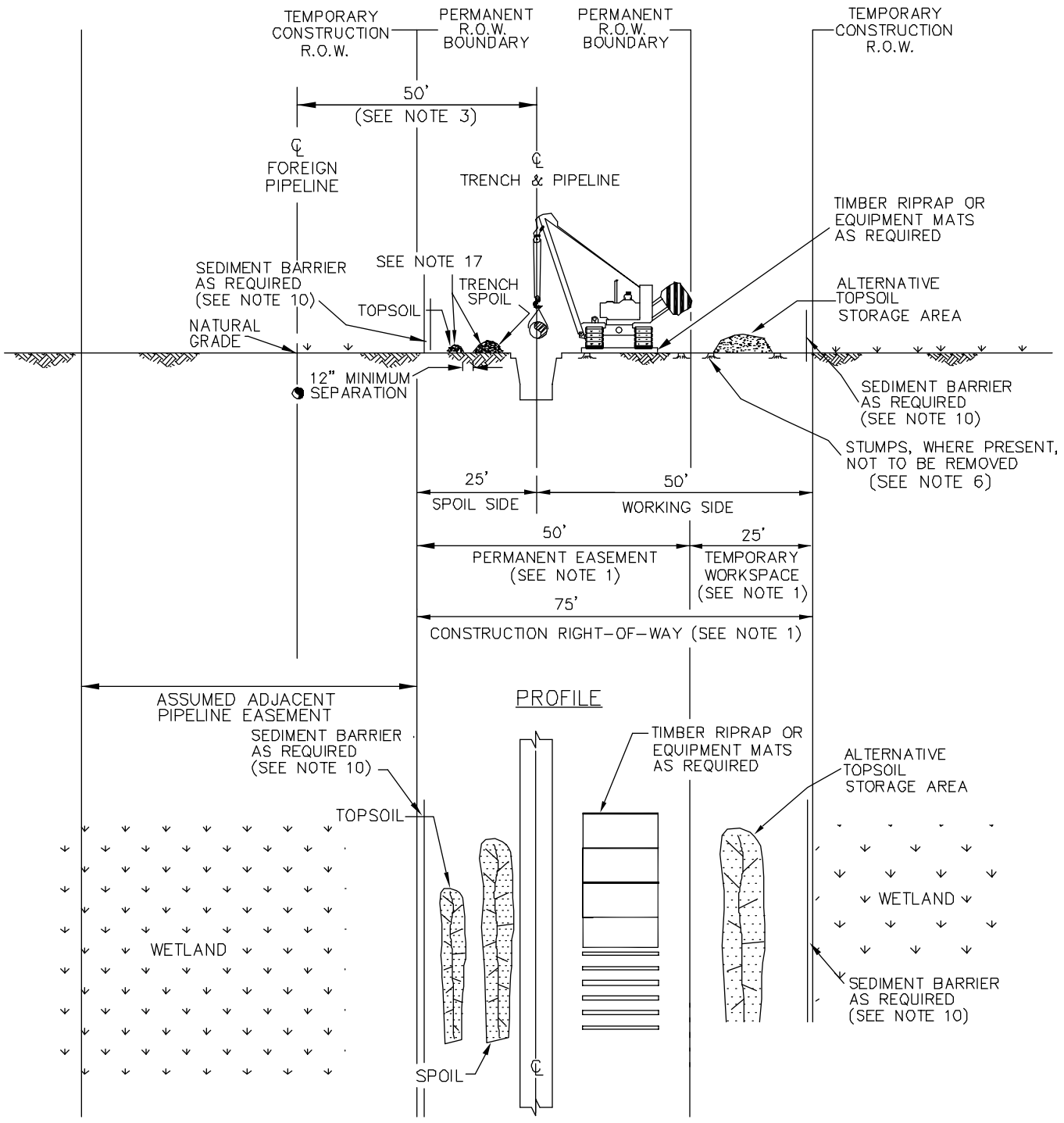

PLAN VIEW

REVISIONS					
1	ISSUED FOR REVIEW	9/10/07	RC		
NO.	DESCRIPTION	DATE	BY	CHK.	APPR.

DRAWN BY:	RC
CHECKED BY:	CAM
REVIEWED BY:	
APPROVED BY:	
PROJECT MANAGER:	
SCALE:NONE	

OVERLAND PASS PIPELINE COMPANY, LLC
100 WEST 5TH STREET
TULSA, OK 74103-4298

CH2MHILL
TRIGON EPC

WETLAND CROSSING PROCEDURE (SHT. 1 OF 2)

PROJECT NUMBER	DRAWING NUMBER	REV.
2275-01	OPPL-TYP-122	A

NOTES:

1. CONSTRUCTION RIGHT-OF-WAY WILL TYPICALLY BE 75 FEET WIDE CONSISTING OF 50 FEET OF PERMANENT EASEMENT AND 25 FEET OF TEMPORARY WORKSPACE.

2. THE SAME LAYOUT APPLIES WHETHER CONSTRUCTION R.O.W. DOES OR DOES NOT ABUT A FOREIGN R.O.W.

3. IF OFFSET FROM A FOREIGN PIPELINE, THE OFFSET WILL BE 50 FEET FOR MOST WETLANDS, BUT MAY BE INCREASED OR DECREASED DEPENDING ON THE SITE SPECIFIC CONSTRUCTION REQUIREMENTS.

4. LOCATE ANY EXTRA TEMPORARY WORK SPACE AREAS AT LEAST 50 FEET FROM EDGE OF WETLAND UNLESS OTHERWISE SPECIFIED IN A SITE-SPECIFIC PLAN.

5. CLEARING OF VEGETATION AND TREES IS PROHIBITED BETWEEN TEMPORARY EXTRA WORK SPACE AND THE EDGE OF THE WETLAND.

6. CUT VEGETATION AND TREES OFF AT GROUND LEVEL, LEAVING EXISTING ROOT SYSTEMS IN PLACE AND REMOVE CUTTINGS FROM THE WETLAND FOR DISPOSAL.

7. LIMIT CONSTRUCTION EQUIPMENT TO ONE PASS THROUGH WETLANDS TO THE EXTENT PRACTICABLE.

8. NO REFUELING OF EQUIPMENT OR CONCRETE COATING ACTIVITIES WITHIN 300 FEET OF WETLAND EXCEPT IN ACCORDANCE WITH THE SPCC PLAN. NO STORAGE OF HAZARDOUS MATERIALS WITHIN 100 FEET OF ANY WETLAND.

9. IF SATURATED AT TIME OF CONSTRUCTION, REDUCE SOIL COMPACTION BY UTILIZING WIDE-TRACK OR BALLOON TIRE CONSTRUCTION EQUIPMENT OR NORMAL EQUIPMENT OPERATED ON TIMBER RIPRAP OR EQUIPMENT MATS.

10. AVOID ADJACENT WETLANDS. INSTALL SEDIMENT BARRIERS IMMEDIATELY AFTER INITIAL GROUND DISTURBANCE ACROSS THE ENTIRE CONSTRUCTION R.O.W. IMMEDIATELY UPSLOPE OF THE WETLAND BOUNDARY AND AT THE EDGE OF THE CONSTRUCTION R.O.W. ALONG THE WETLAND AS DIRECTED BY THE COMPANY INSPECTOR.

11. SEGREGATE THE TOP 1 FOOT OF TOPSOIL FROM THE AREA DISTURBED BY TRENCHING, EXCEPT IN AREAS WHERE STANDING WATER OR SATURATED SOILS ARE PRESENT. MAINTAIN 12" SEPARATION BETWEEN TOPSOIL AND TRENCH SPOIL.

12. LEAVE GAPS IN TOPSOIL AND SPOIL PILES AT OBVIOUS DRAINAGES. DO NOT PUSH UPLAND SOILS INTO CREEKS OR WETLANDS. DO NOT USE TOPSOIL FOR PADDING. AVOID SCALPING VEGETATED GROUND SURFACE WHEN BACKFILLING SPOIL PILE.

13. IF SATURATED AT TIME OF CONSTRUCTION, LEAVE HARD PLUGS AT THE EDGE OF WETLAND UNTIL JUST PRIOR TO LOWERING IN.

14. LOWER-IN PIPE, INSTALL TRENCH BREAKERS AT WETLAND EDGES AS DIRECTED BY THE COMPANY INSPECTOR. BACKFILL IMMEDIATELY ON COMPLETION OF CONSTRUCTION.

15. REMOVE ANY TIMBER RIPRAP OR EQUIPMENT MATS FROM WETLANDS UPON COMPLETION OF CONSTRUCTION.

16. RESTORE GRADE TO NEAR PRE-CONSTRUCTION TOPOGRAPHY AND REPLACE TOPSOIL, WHERE SALVAGED, WITHOUT A CROWN OVER THE TRENCH.

17. TOPSOIL AND TRENCH SPOIL RELATIVE POSITIONS CAN, AS DIRECTED BY THE COMPANY INSPECTOR, BE ADJUSTED TO FIT SITE CONDITIONS.

REVISIONS

NO.	DESCRIPTION	DATE	BY	CHK.	APPR.
A	ISSUED FOR REVIEW	9/10/07	RC		

DRAWN BY:	RC
CHECKED BY:	CAM
REVIEWED BY:	
APPROVED BY:	
PROJECT MANAGER:	
SCALE:NONE	

OVERLAND PASS PIPELINE COMPANY, LLC
100 WEST 5TH STREET
TULSA, OK 74103-4298

CH2MHILL
TRIGON EPC

WETLAND CROSSING PROCEDURE (SHT. 2 OF 2)

PROJECT NUMBER	DRAWING NUMBER	REV.
2275-01	OPPL-TYP-122A	A

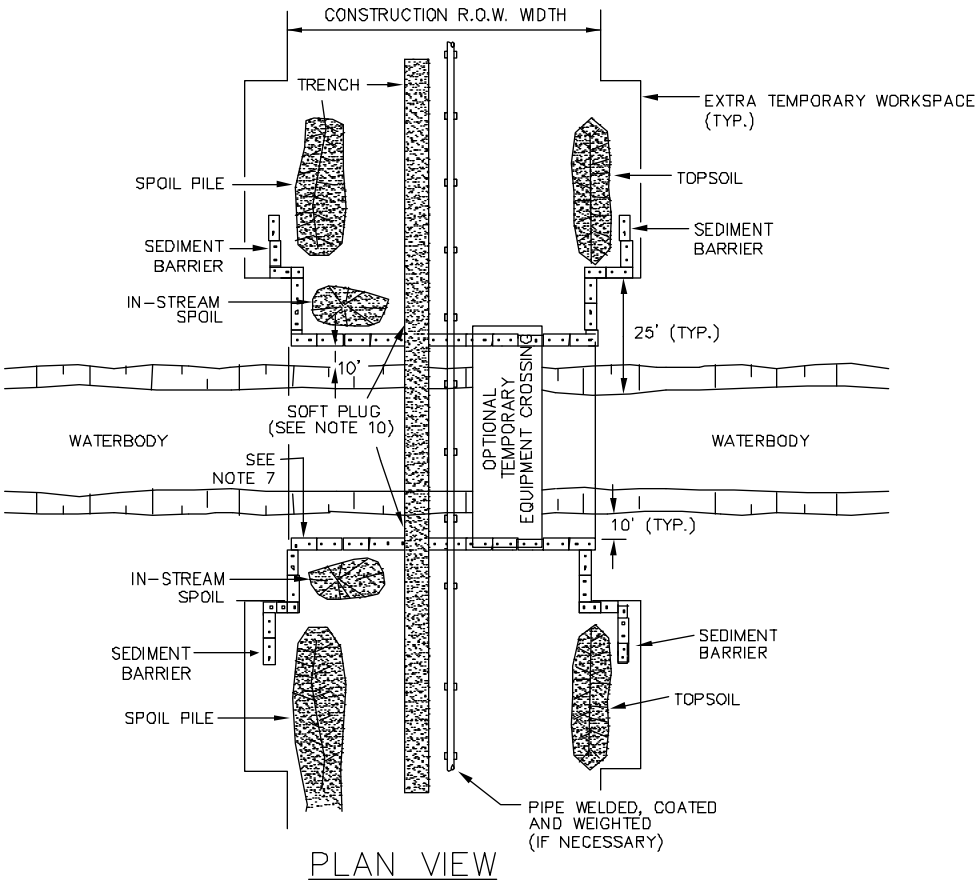

PLAN VIEW

NOTES:

1. METHOD APPLIES TO WATERBODIES THAT ARE NOT STATE-DESIGNATED FISHERIES WHERE FLUME CROSSINGS ARE NOT REQUIRED. IF TOPOGRAPHY PERMITS TEMPORARY EQUIPMENT BRIDGE INSTALLATION, THE CONTRACTOR SHALL TRENCH, STRING, WELD, COAT, WEIGHT (IF NECESSARY), LOWER IN AND BACKFILL UTILIZING THE MAIN LINE CREW TRAVELING OVER THE BRIDGE. IF TOPOGRAPHY PROHIBITS INSTALLATION OF A TEMPORARY EQUIPMENT BRIDGE, CONTRACTOR SHALL TRENCH UP TO BOTH SIDES OF CROSSING; STRING, WELD, COAT AND WEIGHT (IF NECESSARY) USING THE MAINLINE CREW. IN STREAM EXCAVATION, LOWER IN, AND BACKFILL WILL UTILIZES A CLAM OR HOES WORKING FROM THE BANKS.
2. SCHEDULE CROSSING DURING LOW WATER LEVEL IF POSSIBLE.
3. COMPLETE ALL IN-STREAM ACTIVITIES WITHIN 24 HOURS IF FEASIBLE.
4. NO REFUELING OF MOBILE EQUIPMENT WITHIN 300 FEET OF WATERBODY.
5. INSTALLATION OF TEMPORARY EQUIPMENT CROSSING WHERE REQUIRED BY PERMITS OR AGENCIES; OPTIONAL AT THE DISCRETION OF THE COMPANY'S INSPECTOR AT ALL OTHER CROSSINGS.
6. IN AGRICULTURAL LAND, STRIP TOPSOIL FROM SPOIL STORAGE AREA.
7. CONSTRUCT SEDIMENT BARRIERS ALONG THE SIDES OF STOCKPILES AND ACROSS THE ENTIRE CONSTRUCTION R.O.W. TO PREVENT SILT LADEN WATER AND SPOIL FROM FLOWING BACK INTO WATERBODY. BARRIERS MAY BE TEMPORARILY REMOVED TO ALLOW CONSTRUCTION ACTIVITIES BUT MUST BE REPLACED BY THE END OF EACH WORK DAY.
8. IN-STREAM SPOIL TO BE STORED OUT OF THE STREAM CHANNEL A MINIMUM OF 10 FEET FROM THE TOP OF BANK.
9. TRENCH THROUGH WATERBODY USING MAINLINE EXCAVATION EQUIPMENT WHERE PRACTICAL.
10. INSTALL TEMPORARY (SOFT) PLUGS AT THE EDGE OF STREAM BANKS UNTIL JUST PRIOR TO PIPE INSTALLATION TO CONTROL TRENCH SLOUGHING.
11. BACKFILL WITH NATIVE MATERIAL.
12. RESTORE WATERBODY CHANNEL TO APPROXIMATE PRE-CONSTRUCTION PROFILE AND SUBSTRATE.
13. RESTORE STREAM BANKS TO APPROXIMATE ORIGINAL CONDITION AND STABILIZE, AS REQUIRED.
14. ALL DIMENSIONS INDICATED SHALL BE DETERMINED BY ACTUAL CONSTRUCTION CONDITIONS.

REVISIONS					
A	ISSUED FOR REVIEW	9/10/07	RC		
NO.	DESCRIPTION	DATE	BY	CHK.	APPR.

DRAWN BY:	RC
CHECKED BY:	CAM
REVIEWED BY:	
APPROVED BY:	
PROJECT MANAGER:	
SCALE:NONE	

OVERLAND PASS PIPELINE COMPANY, LLC
100 WEST 5TH STREET
TULSA, OK 74103-4298

CH2MHILL
TRIGON EPC

NON-FLOWING WATERBODY CROSSING OPEN-CUT

PROJECT NUMBER	DRAWING NUMBER	REV.
2275-01	OPPL-TYP-124	A

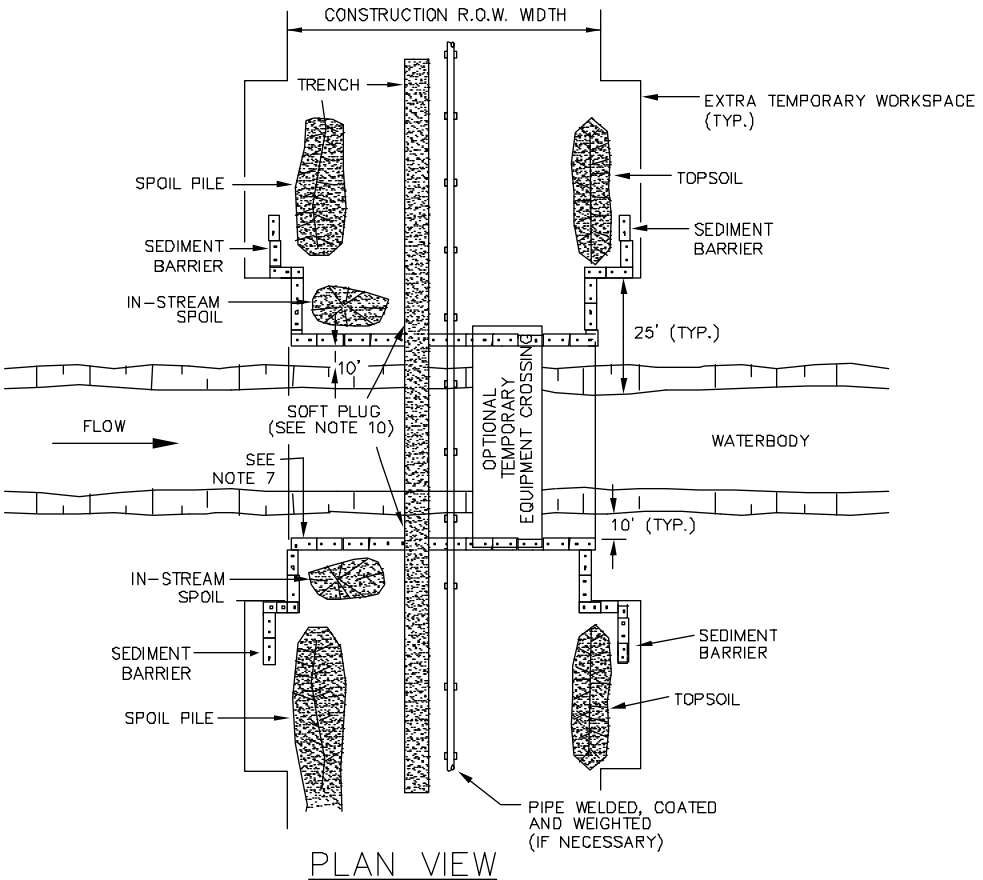

PLAN VIEW

NOTES:

1. METHOD APPLIES TO WATERBODIES THAT ARE NOT STATE-DESIGNATED FISHERIES WHERE FLUME CROSSINGS ARE NOT REQUIRED. IF TOPOGRAPHY PERMITS TEMPORARY EQUIPMENT BRIDGE INSTALLATION, THE CONTRACTOR SHALL TRENCH, STRING, WELD, COAT, WEIGHT (IF NECESSARY), LOWER IN AND BACKFILL UTILIZING THE MAIN LINE CREW TRAVELING OVER THE BRIDGE. IF TOPOGRAPHY PROHIBITS INSTALLATION OF A TEMPORARY EQUIPMENT BRIDGE, CONTRACTOR SHALL TRENCH UP TO BOTH SIDES OF CROSSING; STRING, WELD, COAT AND WEIGHT (IF NECESSARY) USING THE MAINLINE CREW. IN STREAM EXCAVATION, LOWER IN, AND BACKFILL WILL UTILIZES A CLAM OR HOES WORKING FROM THE BANKS.
2. SCHEDULE CROSSING DURING LOW FLOW PERIOD IF POSSIBLE.
3. COMPLETE ALL IN-STREAM ACTIVITIES WITHIN 24 HOURS IF FEASIBLE.
4. NO REFUELING OF MOBILE EQUIPMENT WITHIN 300 FEET OF WATERBODY.
5. INSTALLATION OF TEMPORARY EQUIPMENT CROSSING WHERE REQUIRED BY PERMITS OR AGENCIES; OPTIONAL AT THE DISCRETION OF THE COMPANY'S INSPECTOR AT ALL OTHER CROSSINGS.
6. IN AGRICULTURAL LAND, STRIP TOPSOIL FROM SPOIL STORAGE AREA.
7. CONSTRUCT SEDIMENT BARRIERS ALONG THE SIDES OF STOCKPILES AND ACROSS THE ENTIRE CONSTRUCTION R.O.W. TO PREVENT SILT LADEN WATER AND SPOIL FROM FLOWING BACK INTO WATERBODY. BARRIERS MAY BE TEMPORARILY REMOVED TO ALLOW CONSTRUCTION ACTIVITIES BUT MUST BE REPLACED BY THE END OF EACH WORK DAY.
8. IN-STREAM SPOIL TO BE STORED OUT OF THE STREAM CHANNEL A MINIMUM OF 10 FEET FROM THE TOP OF BANK.
9. TRENCH THROUGH WATERBODY USING MAINLINE EXCAVATION EQUIPMENT WHERE PRACTICAL.
10. INSTALL TEMPORARY (SOFT) PLUGS AT THE EDGE OF STREAM BANKS UNTIL JUST PRIOR TO PIPE INSTALLATION TO CONTROL. WATER FLOW & TRENCH SLOUGHING.
11. MAINTAIN STREAM FLOW THROUGHOUT CROSSING CONSTRUCTION.
12. BACKFILL WITH NATIVE MATERIAL.
13. RESTORE WATERBODY CHANNEL TO APPROXIMATE PRE-CONSTRUCTION PROFILE AND SUBSTRATE.
14. RESTORE STREAM BANKS TO APPROXIMATE ORIGINAL CONDITION AND STABILIZE, AS REQUIRED.
15. ALL DIMENSIONS INDICATED SHALL BE DETERMINED BY ACTUAL CONSTRUCTION CONDITIONS.

REVISIONS

NO.	DESCRIPTION	DATE	BY	CHK.	APPR.
A	ISSUED FOR REVIEW	9/10/07	RC		

DRAWN BY:	RC
CHECKED BY:	CAM
REVIEWED BY:	
APPROVED BY:	
PROJECT MANAGER:	
SCALE:NONE	

OVERLAND PASS PIPELINE COMPANY, LLC
100 WEST 5TH STREET
TULSA, OK 74103-4298

CH2MHILL
TRIGON EPC

FLOWING WATERBODY CROSSING OPEN-CUT

PROJECT NUMBER	DRAWING NUMBER	REV.
2275-01	OPPL-TYP-125	A

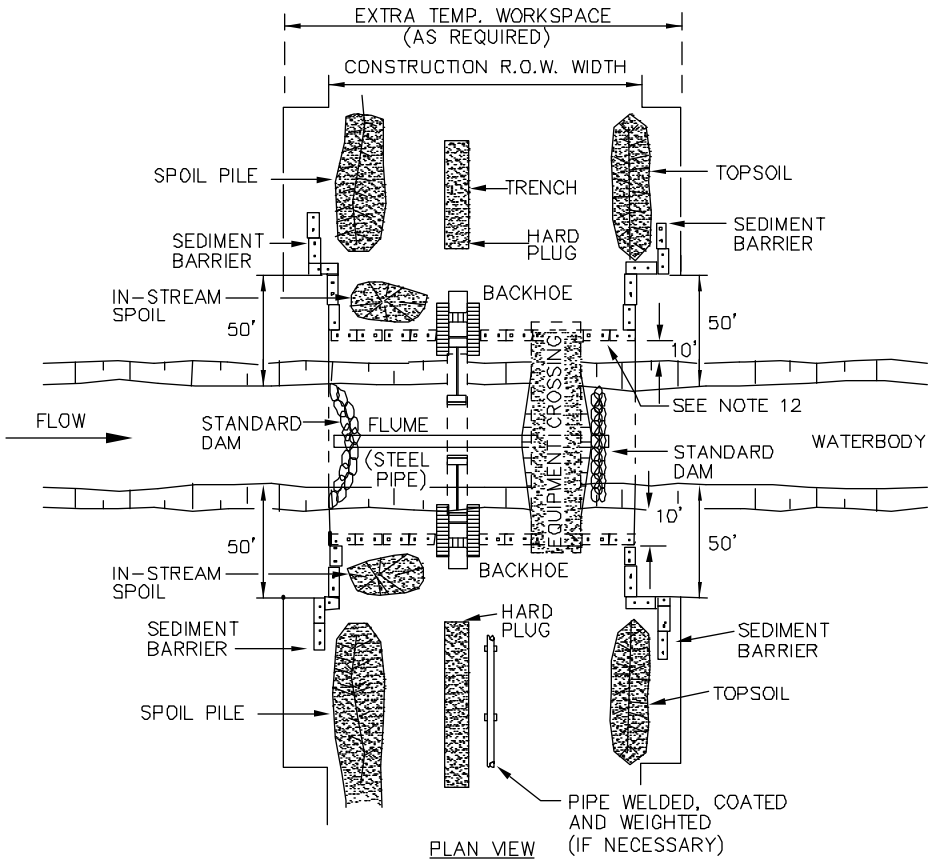

PLAN VIEW

NOTES:

1. METHOD APPLIES TO WATERBODIES WHERE DOWNSTREAM SILTATION MUST BE AVOIDED. FLUMES ARE GENERALLY NOT RECOMMENDED FOR USE ON WATERBODIES WITH A BROAD UNCONFINED CHANNEL, PERMEABLE SUBSTRATE, EXCESSIVE DISCHARGE, OR WHERE A SIGNIFICANT AMOUNT OF BED OR BANK ALTERATION IS REQUIRED TO INSTALL FLUMES OR DAMS.
2. SCHEDULE CROSSING DURING LOW FLOW PERIOD IF POSSIBLE.
3. COMPLETE ALL WATERBODY ACTIVITIES AS EXPEDIENTLY AS POSSIBLE.
4. NO REFUELING OF MOBILE EQUIPMENT OR CONCRETE COATING ACTIVITIES WITHIN 300 FEET OF WATERBODY OR WETLAND. REFUEL STATIONARY EQUIPMENT AS PER THE SPCC PLAN. NO STORAGE OF HAZARDOUS MATERIALS WITHIN 300 FEET OF ANY WATERBODY OR WETLAND.
5. INSTALL TEMPORARY EQUIPMENT CROSSING.
6. IN AGRICULTURAL LAND, STRIP TOPSOIL FROM SPOIL STORAGE AREA.
7. IN-STREAM SPOIL TO BE STORED OUT OF THE STREAM CHANNEL A MINIMUM OF 10 FEET FROM THE WATER'S EDGE WITHIN THE CONSTRUCTION R.O.W. UNLESS DEPICTED OTHERWISE IN SITE SPECIFIC CROSSING PLANS. EXTRA TEMPORARY WORKSPACE MUST BE A MINIMUM OF 50' FROM THE WATERS EDGE.
8. LEAVE HARD PLUGS AT THE STREAM BANK EDGE UNTIL JUST PRIOR TO PIPE INSTALLATION.
9. SIZE FLUME TO HANDLE 150% ANTICIPATED FLOWS. INSTALL FLUME IN WATERBODY AND MAINTAIN CORRECT ALIGNMENT UNTIL REMOVED.
10. CONSTRUCT UPSTREAM DAM FOLLOWED BY DOWNSTREAM DAM. INSTALL A FLANGE ON UPSTREAM END OF FLUME AND SEAL TO SUBSTRATE WITH SANDBAGS AND POLYETHYLENE LINER WHERE NECESSARY TO ENSURE A WATERTIGHT BARRIER. "KEY" DAMS INTO BANKS OR CONSTRUCT SECONDARY DAM, IF NECESSARY.
11. PUMP STREAM CHANNEL BETWEEN DAMS, IF NECESSARY. DISCHARGE WATER THROUGH A DEWATERING STRUCTURE AND ONTO A STABLE WELL VEGETATED AREA TO PREVENT EROSION AND SEDIMENTATION. NO HEAVILY SILT-LADEN WATER MAY BE DISCHARGED IN THE STREAM.
12. CONSTRUCT SEDIMENT BARRIERS (STRAW BALES AND/OR SILT FENCE) TO PREVENT SILT LADEN WATER AND SPOIL FROM FLOWING BACK INTO WATERBODY. CONSTRUCTED SEDIMENT BARRIERS SHALL EXTEND ALONG THE SIDES OF THE STOCKPILES AND THE ENDS OF DAMS. BARRIERS MAY BE TEMPORARILY REMOVED TO ALLOW CONSTRUCTION ACTIVITIES BUT MUST BE REPLACED BY THE END OF EACH WORK DAY.
13. COMPLETE PREFABRICATION OF IN-STREAM PIPE SECTION AND WEIGHT PIPE AS NECESSARY PRIOR TO COMMENCEMENT OF IN-STREAM ACTIVITY.
14. TRENCH THROUGH WATERBODY. INSTALL TEMPORARY (SOFT) PLUGS, IF NECESSARY, TO CONTROL WATER FLOW AND TRENCH SLOUGHING.
15. MAINTAIN STREAM FLOW, IF PRESENT, THROUGH FLUME THROUGHOUT CROSSING CONSTRUCTION.
16. LOWER-IN PIPE, INSTALL TRENCH PLUG AND BACKFILL IMMEDIATELY.
17. BACKFILL WITH NATIVE MATERIAL.
18. RESTORE WATERBODY CHANNEL TO APPROXIMATE PRE-CONSTRUCTION PROFILE AND SUBSTRATE.
19. RESTORE STREAM BANKS TO APPROXIMATE ORIGINAL CONDITION. STABILIZE WATERBODY BANKS AND INSTALL TEMPORARY SEDIMENT BARRIERS WITHIN 24 HOURS OF COMPLETING THE CROSSING.

REVISIONS					
A	ISSUED FOR REVIEW	9/10/07	RC		
NO.	DESCRIPTION	DATE	BY	CHK.	APPR.

DRAWN BY:	RC
CHECKED BY:	CAM
REVIEWED BY:	
APPROVED BY:	
PROJECT MANAGER:	
SCALE:NONE	

OVERLAND PASS PIPELINE COMPANY, LLC
100 WEST 5TH STREET
TULSA, OK 74103-4298

CH2MHILL
TRIGON EPC

WATERBODY CROSSING OPEN-CUT DRY FLUME

PROJECT NUMBER	DRAWING NUMBER	REV.
2275-01	OPPL-TYP-126	A

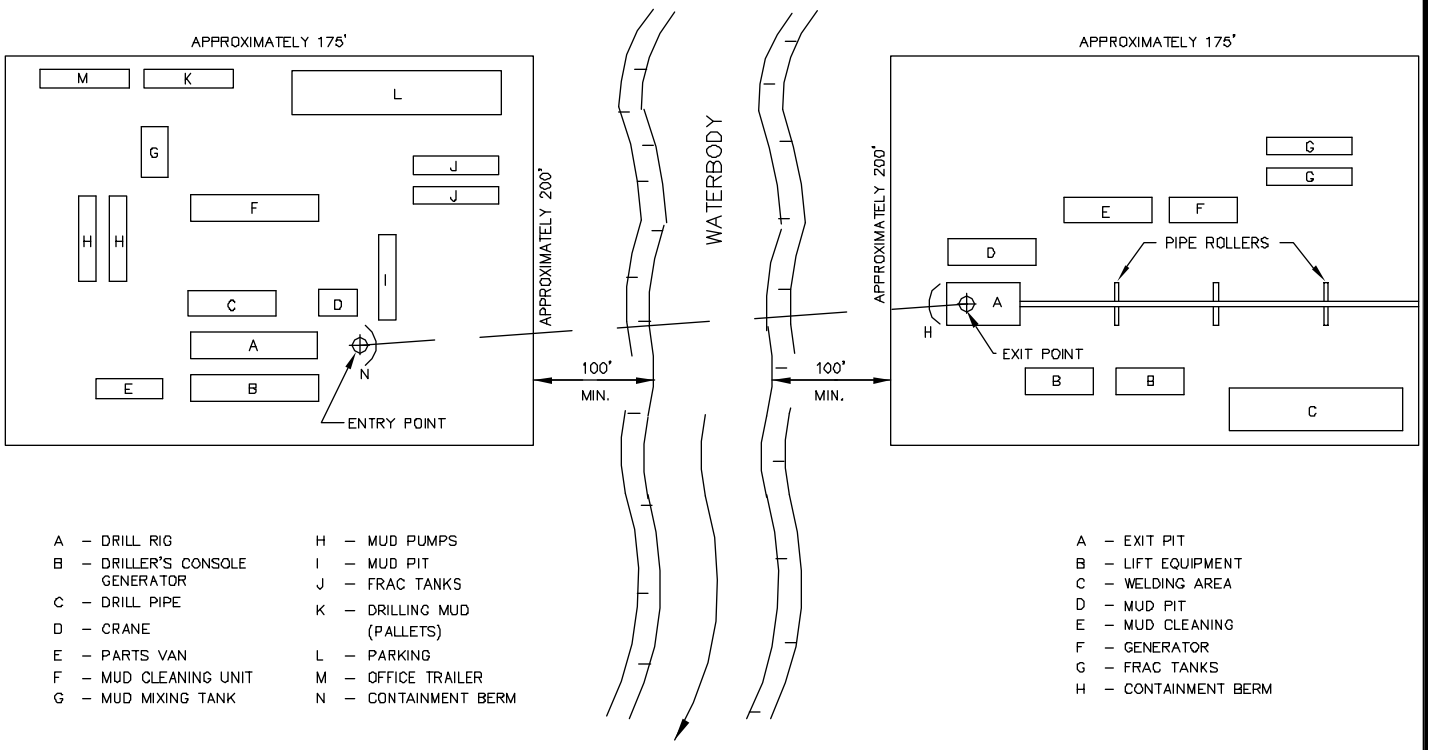

A – DRILL RIG
B – DRILLER'S CONSOLE GENERATOR
C – DRILL PIPE
D – CRANE
E – PARTS VAN
F – MUD CLEANING UNIT
G – MUD MIXING TANK
H – MUD PUMPS
I – MUD PIT
J – FRAC TANKS
K – DRILLING MUD (PALLETS)
L – PARKING
M – OFFICE TRAILER
N – CONTAINMENT BERM

A – EXIT PIT
B – LIFT EQUIPMENT
C – WELDING AREA
D – MUD PIT
E – MUD CLEANING
F – GENERATOR
G – FRAC TANKS
H – CONTAINMENT BERM

PLAN

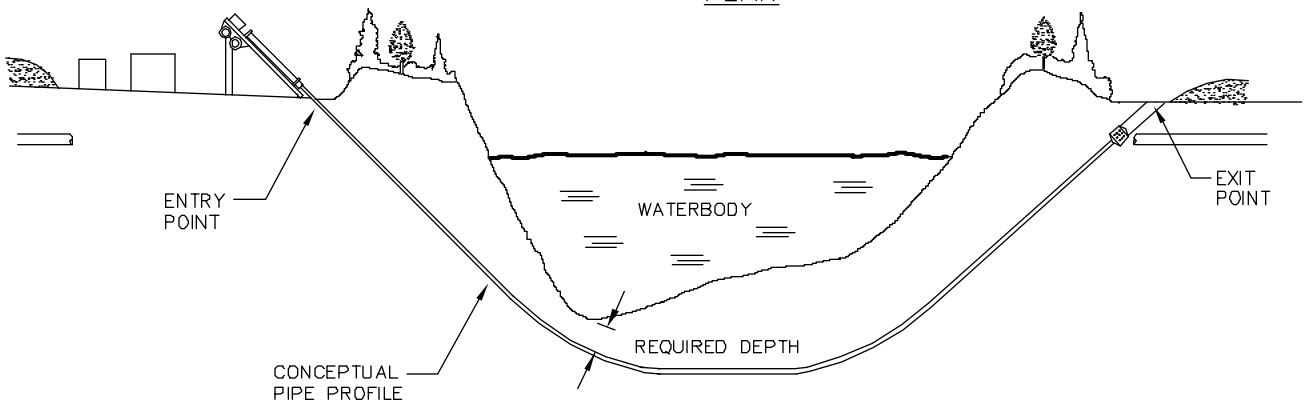

PROFILE

NOTES:

1. SET UP DRILLING EQUIPMENT A MINIMUM OF 100 FEET FROM THE EDGE OF THE WATERBODY. DO NOT CLEAR OR GRADE WITHIN THE 100 FOOT ZONE.
2. ENSURE THAT ONLY BENTONITE BASED DRILLING MUD IS USED. DO NOT ALLOW THE USE OF ANY ADDITIVES TO THE DRILLING MUD WITHOUT THE APPROVAL OF COMPANY'S INSPECTOR.
3. INSTALL SUITABLE DRILLING MUD TANKS OR SUMPS TO PREVENT CONTAMINATION OF WATERBODY.
4. INSTALL BERMS DOWNSLOPE FROM THE DRILL ENTRY AND ANTICIPATED EXIT POINTS TO CONTAIN ANY RELEASE OF DRILLING MUD.
5. DISPOSE OF DRILLING MUD IN ACCORDANCE WITH THE APPROPRIATE REGULATORY AUTHORITY REQUIREMENTS.
6. SEE SITE SPECIFIC PERMIT OR ALIGN SHEETS FOR DIMENSIONS.

REVISIONS

NO.	DESCRIPTION	DATE	BY	CHK.	APPR.
B	UPDATED HDD WORKSPACE WIDTH	3/20/08	GP		
A	ISSUED FOR REVIEW	9/10/07	RC		

DRAWN BY:	RC
CHECKED BY:	CAM
REVIEWED BY:	
APPROVED BY:	
PROJECT MANAGER:	
SCALE:NONE	

OVERLAND PASS PIPELINE COMPANY, LLC
100 WEST 5TH STREET
TULSA, OK 74103-4298

CH2MHILL
TRIGON EPC

WATERBODY CROSSING H.D.D.

PROJECT NUMBER	DRAWING NUMBER	REV.
2275-01	OPPL-TYP-129	A

ATTACHMENT 3
SEED MIXES

DRAFT

CH2MHILL TRIGON EPC

White River Field Office Seed Mixes

Subject to Field Office Approval

Standard Seed Mixes

Seed Mix #	Species (Variety)	Lbs PLS / Acre	Range sites
1	Siberian wheatgrass (P27) Russian wildrye (Bozoisky) Crested wheatgrass (Hycrest) Alternates: Yellow sweetclover Fourwing saltbush Nutall saltbush Winterfat Annual Sunflower Western wheatgrass	3 2 3	Alkaline Uplands, Badlands, Clayey 7'-9', Clayey Salt Desert, Cold Desert Breaks, Cold Desert Overflow, Gravelly 7'-9', Limey Cold Desert, Loamy 7 ' - 9 ' , Loamy Cold Desert, Loamy Salt Desert, Saline Lowland, Salt Desert Breaks, Salt Flats, Salt Meadow Sands 7'-9', Sandy 7'-9'. Sandy Cold Desert, Sandy Salt Desert, Shale 7'-9', ShaleISands Complex, Shallow Loamy, Shallow Sandy, Shallow Slopes, Silty Salt Desert, Silty Swale, Steep Slopes
2	Western wheatgrass (Arriba) Pubescent wheatgrass (Luna) Russian wildrye (Bozoisky) Crested wheatgrass (Fairway/Ephraim) Yellow sweetclover (Madrid) Fourwing saltbush (Wytana/Rincon) Alternates: Winterfat	3 2 2 2 0.5 2	Alkaline Slopes, Clayey Foothills, Clayey Slopes, Claypan, Mountain Shale
3	Pubescent wheatgrass (Luna) Western wheatgrass (Rosanna) Crested wheatgrass (Ephraim) Indian ricegrass (Nezpar) Orchardgrass (Paiute) Yellow sweetclover (Midrid) Alternates: Fouwing saltbush Intermediate wheatgrass Cicer Milkvetch (Monarch)	4 2 1 1 1 0.5	Deep Loam, Loamy 10'-14'. Loamy Breaks, Loamy Slopes, Rolling Loam, Valley Bench
4	Western wheatgrass (Rosanna) Pubescent wheatgrass (Luna) Crested wheatgrass (Nordan)	2 3 2	Gravelly 10'-14', Pinyon/Juniper Woodland, stony Foothills, 147 (Mountain

DRAFT

	Orchardgrass (Paiute) Indian ricegrass (Nezpar) Fourwing saltbush (Wytana) Alternates: Alfalfa (Nomad or Ladak)	1 1 1	Mahogany)
5	Pubescent wheatgrass (Luna) Crested wheatgrass (Fairway) Western wheatgrass (Rosanna) Indian ricegrass (Nezpar) Alternates: Yellow sweetclover Alfalfa (Nomad or Ladak) Fourwing saltbush	4 *2* 3 *2*	Sandy Bench, Sandy Foothills, Sand Hills
6	Basin wildrye (Magnar) Western wheatgrass (Rosanna) Pubescent wheatgrass (Luna) Orchardgrass (Paiute) Fourwing saltbush (Wytana) Alternates: Crested wheatgrass Cicer milkvetch (Monarch) Yellow sweetclover	*2* 3 3 1 1	Foothill Swale, Sandy Swale, Swale Meadow
7	Big bluegrass (Sherman) Intermediate wheatgrass (Greenar) Smooth brome (Manchar) Orchard grass (Latar) Cicer milkvetch (Monarch) Alternates: Small burnet Pubescent wheatgrass Mountain brome Alfalfa(Nomad or Ladak)	2 4 3 1 0.5	Alpine Meadow, Alpine Slopes, Aspen Woodlands, Brushy Loam, Deep Clay Loam, Douglas-fir Woodland, Loamy Park, Mountain Loam, Mountain Meadows, Mountain Swale, Shallow Subalpine, Spruce-fir Woodland, Subalpine Loam
8	Smooth brome (Manchar) Pubescent wheatgrass (Luna) Crested wheatgrass (Nordan) Cicer milkvetch (Monarch) Alternates: Alfalfa Russian wildrye (Vinall) Beardless wheatgrass (Whitmar)	3 3 *2* 1	Dry Exposure, Dry Mountain Loam, Limestone Hills, Rocky Loam, Stony Loam

DRAFT

CH2MHILL TRIGON EPC

Native Seed Mixes

Seed Mix #	Species (Variety)	Lbs PLS Per Acre	Range Sites
1	Western wheatgrass (Arriba) Streambank wheatgrass (Sodar) Thickspike wheatgrass (Critana) Fourwing saltbush (Wytana, Rincon) Alternates: Winterfat Shadscale Globemallow	3 2 2 2	Alkaline Slopes, Clayey Foothills, Clayey Slopes, Claypan, Mountain Shale
2	Western wheatgrass (Rosanna) Indian ricegrass (Nezpar) Bluebunch wheatgrass (Whi tmar) Thickspike wheatgrass (Critana) Green needlegrass (Lodorm) Globemallow Alternates: Fourwing saltbush Utah sweetvetch Balsamroot	2 1 2 2 1 0.5	Deep Loam, Loamy 10'-14'. Loamy Breaks, Loamy Slopes, Rolling Loam, Valley Bench
3	Western wheatgrass (Rosanna) Bluebunch wheatgrass (Secar) Thickspike wheatgrass (Critana) Indian ricegrass (Nezpar) Fourwing saltbush (Wytana) Utah sweetvetch Alternates: Needle-and-thread, Globemallow	2 2 2 1 1 1	Gravelly 10'-14', Pinyon/Juniper Woodland, Stony Foothills, 147 (Mountain Mahogany)
4	Western wheatgrass (Rosanna) Needle-and-thread Thickspike wheatgrass (Critana) Indian ricegrass (Nezpar) Sand dropseed Alternates: Fouwing saltbush	2 2 2 2 1	Sandy Bench, Sandy Foothills, Sand Hills

DRAFT

5	Basin Wildrye (Magnar) Western wheatgrass (Rosanna, Arriba) Bluebunch wheatgrass (Secar) Thick spike wheatgrass (Critana) Fourwing saltbush (Wytana) Alternatives: Utah sweetvetch, Globemallow	2 3 1 2 1	Foothill Swale, Sandy Swale, Swale Meadow
6	Bluebunch wheatgrass (Secar) Slender wheatgrass (Primar) Big bluegrass (Sherman) Canby bluegrass (Canbar) Mountain brome (Bromar) Alternates: Blue flax Rocky Mountain penstemon, Balsamroot	2 2 1 1 2	Alpine Meadow, Alpine Slopes, Aspen Woodlands, Brushy Loam, Deep Clay Loam, Douglas-fir Woodland, Loamy Park, Mountain Loam, Mountain Meadows, Mountain Swale, Shallow Subalpine, Spruce-fir Woodland, Subalpine Loam
7	Thickspike wheatgrass (Critana) Slender wheatgrass (Primar) Beardless wheatgrass (Whitmar) Streambank wheatgrass (Sodor) Canby bluegrass (canbar)	2 2 2 1 1	Dry Exposure, Dry Mountain Loam, Limestone Hills, Rocky Loam, Stony Loam

DRAFT

CH2MHILL TRIGON EPC

Little Snake Field Office Seed Mix

Subject to Field Office Approval

Standard Seed Mixes

Seed Mix #	Species (variety)	Lbs PLS/ac		Range Sites
		Drilled	Broadcast	
1	Thickspike wheathgrass (Critana) Indian ricegrass (Nezpar) Western wheatgrass (Rosana) Neddleandthread Big sagebrush (Wyoming) Gardner's Saltbush	4 2 2 2 0.5 1	8 4 4 4 1 2	Sagebrush Steppe/Scrub
2	Western wheatgrass (Rosana Indian ricegrass (Nexpar) Thickspike wheatgrass (Critana) Slender wheatgrass (Pryor) Big sagebrush (Wyoming) Serviceberry	4 2 2 2 0.5 1	8 4 4 4 1 2	Juniper Woodland community
3	Western wheatgrass (Rosana) Slender wheatgrass (Pryor) Indian ricegrass (Nezpar) Bottlebrush squirreltail Gardner's saltbush Common winterfat	4 2 2 2 1 1	8 4 4 4 2 2	Salt Desert Scrub
4	Western wheatgrass Green needlegrass Needleandthread Thickspike wheatgrass Indian ricegrass Big sagebrush (Wyoming)	4 2 1 1.5 1 3	8 4 2 3 2 6	Loamy and Clay Foothills
5	Indian ricegrass Needleandthread Nevada bluegrass Prairie Junegrass Great Basin wildrye Bluebunch wheatgrass Big sagebrush (Wyoming) Antelope bitterbrush	2.5 2 1 1 1 0.25 3 0.25	5 4 2 2 2 0.5 6 0.5	Sandy Soils

DRAFT

Rawlins Field Office Seed Mixes

Subject to Field Office Approval

Standard Seed Mixes

Seed Mix #	Species	Lbs/PLS acre		Range Sites
		Drilled	Braodcast	
1	Thickspike wheatgrass (Critana) Indian ricegrass (Nezpar) Western wheatgrass (Rosana) Needle-and-thread Big sagebrush (Wyoming) Gardner's saltbush Alternates: Bottlebrush squirreltail slender wheatgrass Shadscale Fourwing saltbush Scarlet globemallow Lewis' flax	4 2 2 2 0.5 1	8 4 4 4 1 2	Dry Loamy/Sandy Soils
2	Western wheatgrass-Rosana Slender wheatgrass-Pryor Bottlebrush squirreltail Gardner's saltbush Common winterfat Alternates: Bluebunch wheatgrass Thickspike wheatgrass Basin wildrye Shadscale Fourwing saltbush	4 2 2 2 1	8 4 4 4 2	Dry Alkaline/Saline Soils
3	Western wheatgrass Blue grama Side-oats grama Needle-and-thread Slender wheatgrass Prairie coneflower Lewis' flax Alternates: Basin wildrye Indian ricegrass Scarlet globemallow.	6 1 4.5 6 6 1.2 0.5	12 2 9 12 12 2.4 1	Deep Loamy Soils

Possible seed sources:
Arkansas Valley Seed Solutions 877-957-3337; 4625 Colorado Blvd, Denver, CO 80216
Pawnee Butte Seed Co. 970-356-7002; P.O. Box 1604, Greeley, CO 80632
Sharp Bros, Seed Co. 800-421-4234, 104 East 4th Street, Greeley, Colorado 80631

DRAFT

ATTACHMENT 4
RECLAMATION MONITORING FORM

DRAFT

CH2MHILL
TRIGON EPC

RECLAMATION CHECKLIST

For the week ending:

Last precipitation event / amount:

Reclamation success was evaluated weekly in the year following construction and twice yearly thereafter.
Areas that required additional effort were documented in the Daily Environmental Report for the day that Reclamation Survey was conducted.

Mile-post	**Station Range**		**Feature (e.g. wash, slope, access road)**	**Construc-tion Status**			**Reclamation Measure**								**Comments**
	Begin	End		Active	Inactive	Complete	% ROW similar to off-ROW	New Weed Pop.?	Expanded Weed Pop.?	Dominant plant on. ROW	Noticeable Soil Movement ?	Trench sunken?	Depth of any Gullies	Irrigation flow OK?	

DRAFT

ATTACHMENT 5
STORMWATER MANAGEMENT PLAN

DRAFT

TABLE OF CONTENTS

1.0 COVERAGE UNDER THIS PERMIT 3
2.0 PROJECT DESCRIPTION 3
2.1 Nature of Construction Activity ... 3
2.2 Sequence of Major Soil Disturbance Activities ... 4
2.3 Estimated Disturbance Area ... 5
2.4 Soil Description ... 6
2.5 Existing Vegetation ... 10
2.6 Other Stormwater Discharges ... 11
2.7 Non-stormwater Discharges ... 11
2.8 Receiving Waters ... 12
3.0 STORMWATER CONTROLS 12
3.1 Erosion and Sediment Controls ... 12
3.2 Structural Practices ... 13
3.3 Non-Structural Practices ... 14
4.0 OTHER CONTROLS 14
5.0 PERMANENT STABILIZATION PRACTICES 15
6.0 INSPECTION, MAINTENANCE, AND MODIFICATIONS 16
6.1 Inspection ... 16
6.2 Maintenance ... 17
6.3 SWMP Modification ... 17
7.0 REFERENCES 17

LIST OF EXHIBITS

EXHIBIT A Alignment Sheets

EXHIBIT B Best Management Practices

EXHIBIT C Inspection Form

EXHIBIT D Notice of Termination

1.0 COVERAGE UNDER THIS PERMIT

A thorough Stormwater Management Plan (SWMP) is required for compliance with the Colorado Discharge Permit System General Permit for Stormwater Discharges Associated with Construction Activities (Stormwater Construction Permit). This program is under the authority of the Colorado Department of Public Health and Environment, Water Quality Control Division. Wyoming's Department of Environmental Quality requires a Stormwater Pollution Prevention Plan for coverage under the General Construction Stormwater Permit. Both Colorado and Wyoming require permits for stormwater protection for oil and gas operations. This plan and the Colorado and Wyoming permits cover discharges of stormwater only. The purpose of this plan is to describe Best Management Practices that will be used on this project to protect stormwater discharges and meet the requirements of both the Colorado Stormwater Construction Permit and the Wyoming General Construction Stormwater Permit.

2.0 PROJECT DESCRIPTION

Overland Pass Pipeline Company LLC (OPPC) proposes to construct and operate the Piceance Basin Lateral Natural Gas Liquids Pipeline Project (Project). This project consists of 152 miles of 14-inch diameter buried steel pipeline that begins in the Piceance Basin in Rio Blanco County Colorado and runs north to Echo Springs, Carbon County Wyoming. A pump station may be required on a site at the approximate mid-point of the route should the need to increase through-put volumes arise. The pipeline could eventually transport an estimated maximum volume of 100,000 barrels per day of Y-grade natural gas liquids.

2.1 Nature of Construction Activity

The standard open cut construction method will be used to install the pipeline. This method includes clearing, grading, trenching, pipe stringing, pipe bending, welding, joint coating, padding where required, lowering in, backfilling, strength testing, cleanup, and restoration.

Where necessary, the surface of the pipeline route will be cleared to provide a flat surface for trenching equipment. Typically, the trench line is bladed to clear the area of vegetation and prepare a level working surface. Pipeline construction equipment that will be used includes trucks, loaders, graders, excavators, backhoes, trenchers, side-booms, bending machines, and pickups. Soil will be removed and stockpiled and/or windrowed on the working side of the ditch. Any existing top soil will be segregated from the remaining spoils for use in final reclamation.

Four to twelve inches of topsoil will be salvaged before trenching and windrowed or stockpiled near the operations off the traveled route to prevent its loss or compaction. This procedure will be followed on portions of the route that contain native vegetation in accordance with regulatory and easement requirements. Salvaging of topsoil will be used to preserve native seed stock on the right-of-way and assist in the revegetation and stabilization process.

Spoils from cuts will typically be used as backfill at the site of origin. In areas where the pipeline is located within existing service roads, the backfill will be compacted following the requirements of local permitting agencies.

Grading will include leveling the ground surface as required to permit transit and operation of vehicles and equipment and to enable placement of the pipeline at the desired elevation. In most instances, level surfaces are already present and little grading will be required. Cuts and fills to maintain grade will be minimized. Where necessary, cut and fill will be blended with existing terrain to maintain drainage and slope stability.

OPPC will design, construct, operate, and maintain the proposed facilities in accordance with the U.S. Department of Transportation regulations codified at Code of Federal Regulations, Title 49, Part 195, "Transportation of Hazardous Liquids by Pipeline", and other applicable federal and state regulations.

2.2 Sequence of Major Soil Disturbance Activities

General construction stages for the pipeline construction and changes in site erosion potential and stormwater runoff that accompany each stage are described below. The stages of specific projects and locations may vary slightly.

Stage 1: Pre-Construction - Stormwater runoff from the site is at pre-developed levels and erosion is minimal. Site perimeter erosion controls may be required prior to initial disturbance to protect areas designated as high importance.

Stage 2: Clearing and Grading for Access - Clearing and grading is accomplished for access only. Measures are implemented to protect off-site properties, including the installation of construction entrances (large aggregate aprons which transition from the construction site to paved off-site roadways). Erosion from the site increases to moderate levels and stormwater runoff volume begins to increase as vegetation is removed and site areas become compacted by heavy equipment. At this stage, the installation Best Management Practices (BMPs) may be necessary. Typical BMPs are included in Exhibit B. Potential locations of BMPs include the downhill side of the ROW where drainages cross and areas where the ROW approaches a wetland or other waterbody.

Stage 3: Full Clearing and Grading - Full clearing and grading can result in moderate to high levels of erosion, especially on steep slopes. Major storms can wash away sediment control structures and can deposit substantial sediment in control structures, significantly reducing capacity. Runoff volume is increasing as disturbed area increases. Regular inspection and maintenance of sediment control practices is required to maintain effectiveness of the devices.

Clearing will be conducted to allow access for the construction equipment (e.g., backhoe or trenching machine). ROW clearing will be performed on all lands administered by the BLM and on fee lands where it is necessary to allow for safe access for the construction equipment and the ground surface will not be grubbed or cleared of vegetation less than 4-in in height when possible. Any remaining vegetation will provide some soil stabilization during and after construction activities. In any case, clearing will not be performed outside of the right-of-way except for construction of access roads and staging areas approved by appropriate landowner.

Drainage ditches will be maintained and left unobstructed to prevent the `ponding' of water against the spoil bank or backfill crown.

Stage 4: Installation of Storm Drainage System - Stormwater BMPs are complete and storm drains and runoff diversions are installed as necessary. Erosion can continue to be moderate to high and stormwater runoff volume continues to increase as disturbed areas become more compacted.

Stage 5: Active Construction of Structures - Construction is at its peak. Moderate to high erosion rates can continue and stormwater runoff volumes can approach maximum. The impact of high erosion rates can be significant if sediment control practices have not been maintained during previous stages of construction or are clogged or have inadequate capacity to control site stormwater discharges.

The trenching will be performed with equipment such as wheel ditchers, backhoes, draglines, rock

plows, or similar equipment. If required, blasting, sawing, or pneumatic hammers may also be needed to break solid rock into removable pieces. In general, the trenching activities will be performed in accordance with standard engineering practice, as specified by OPPC and any applicable regulations. The trenches will be excavated to sufficient depth to provide adequate cover and at least 6-in of padding between the outside of the pipe and the bottom or sides of the trench. The trenching operations will be timed so that the trench does not remain open for an extended period. The spoil bank from the trenching operations will be maintained free of foreign materials. Where present, the topsoil will be segregated from the subsoil for replacement later.

Backfilling the trench will be performed using appropriate methods to minimize impacts to the right-of-way and to minimize soil disturbance. After compaction, any remaining backfill will be placed in the pipeline trench and spread on both sides of the pipeline trench. The backfill over the trench will be crowned to a height of not less than 8-inches and not more than 12-inches above the adjacent ground surface. Through rocky lands where livestock are confined, the backfill crown could be broken every 100 yards with a 20-foot-wide gap. The gaps will be level with the surrounding ground.

When backfilling on hillsides or sloping ground, furrows or terraces will be constructed across the pipeline trench to direct the flow of water into the adjacent vegetation and natural drainages.

Stage 6: Site Stabilization - Post-construction stormwater management measures will be installed during the construction process to control pollutants in stormwater discharges after construction operations have been completed. Structural measures (see section 6.2) will be placed on upland soils to the degree practicable. Such measures must be designed and installed in compliance with any applicable federal, local, or state requirements.

Disturbed areas are stabilized with vegetation, hydro mulch, or other suitable non-erosive cover. Once all areas of the site are stabilized, temporary sediment control measures will be removed from the site. Sediment collected during the construction phase will be removed (dredged) from permanent stormwater control structures to restore design capacity, if necessary. Stormwater runoff volume reaches post-development rates and may be less than the volume that occurred in Stage 5, due to areas of the site that are stabilized with vegetation.

2.3 Estimated Disturbance Area

Table 2.3.1 Estimates of disturbance on private and public lands.

Land Status	Pipe Length (ft)	Pipe Length (miles)	50-foot ROW (acres)	25-foot TUA strip (acres)	Total acreage	% of Route
STATE - Wyoming	5,495	1.1	6.3	3.2	9.5	0.8
STATE - Colorado	53,786 (40% State Trust, 60% CDOW)	10.2	61.7	30.9	92.6	6.7
PRIVATE	365,928	69.3	420.0	210.0	630.0	45.5
BLM	378,145	71.6	434.0	217.0	651.0	47.0
TOTALS	803,757	152.2	922.0	461.1	1383.1	100

*All values are rounded to nearest foot.

2.4 Soil Description

Soils present along the portion of the route in Sweetwater and Carbon Counties, Wyoming have been mapped only at the 1:100,000 scale. These map units exist only in draft form and were mapped at a lower resolution than the soils of Colorado counties crossed by this pipeline (Munn and Arneson 1999). NRCS soil data for this area is currently not available.

According to these data, the route in Carbon County crosses Ustic Haplargids, fine-loamy, mixed, frigid – Aridic Argiborolls, fine smectitic (Munn and Arneson 1999). In Sweetwater County, the route passes through several soil types:

Soil Type*
Ustic Haplargids, fine-loamy and coarse-loamy, mixed, frigid- Ustic Haplocambids, sandy, mixed, frigid.
Rock Outcrop; Typic Torriorthents, loamy, mixed (calc), frigid, shallow; and Lithic Torriorthents, loamy-skeletal, mixed (calc), frigid
Typic Torrifluvents, fine-silty and fine, mixed (calcareous), frigid
Typic Haplocambids, fine, smectitic, frigid and Typic Torrifluvents, fine and fine-silty, mixed (calcareous), frigid
Typic Haplosalids, fine, mixed, frigid and Typic Haplocambids, fine-silty, mixed, frigid.
Typic Torriorthents, loamy, mixed (calcareous),frigid, shallow,- Typic Haplocalcids, coarse-loamy, mixed, frigid, and Lithic Torriorthents, loamy-skeletal, mixed (calcareous), frigid.
Aquic Haplustolls, coarse-loamy, mixed, frigid; and Ustic Torriorthents, fine-loamy, mixed (calc), frigid; and Typic Fluvaquents, fine-loamy, mixed (calc), frigid.

*Also taken from Munn and Arneson 1999.

Table 2.4-1 lists the soil types and their total area within the 50 nominal ROW for the route within Rio Blanco County (Tripp et al. 1982 and Soil Survey Staff 2008) while Table 2.4-2 lists those soils impacted in Moffat County (Soil Survey Staff 2008). Areas mapped as open water have been dropped from the list because the pipeline will be installed beneath large waterbodies using directional drilling technologies.

Table 2.4-1. Mapped soil units found along route in Rio Blanco County, Colorado.

Map Unit	Map Unit Name	Wind Erodibility Group[1]	Wind Erodibility Index[2]	Kw Factor[3]
1	Abor clay loam, 5 to 30% slopes	4L	86	0.2
4	Absher loam, 3 to 8% slopes	4L	86	0.28
6	Barcus channery loamy sand, 2 to 8% slopes	2	134	0.1
10	Blazon, moist-Rentsac complex, 8 to 65% slopes	4L	86	0.2
11	Borollic Calciorthids-Guben complex, 6 to 50% slopes	4L	86	0.2

15	Castner channery loam, 5 to 50% slopes	5	56	0.15
30	Dollard silty clay loam, 8 to 15% slopes	4L	86	0.24
31	Dollard silty clay loam, 15 to 40% slopes	4L	86	0.24
32	Fluvaquents, frequently flooded	8	0	0.28
33	Forelle loam, 3 to 8% slopes	4L	86	0.37
34	Forelle loam, 8 to 15 % slopes	4L	86	0.37
36	Glendive fine sandy loam	3	86	0.28
39	Guben loam, 3 to 8% slopes	4L	86	0.24
41	Havre loam, 0 to 4% slopes	4L	86	0.37
42	Irigul channery loam, 5 to 50% slopes	6	48	0.15
43	Irigul - Parachute complex, 5 to 30% slopes	6	48	0.15
45	Jerry-Thornburgh-Rhone complex, 8 to 65% slopes	6	48	0.2
51	Mergel-Redthayne-Dollard complex, 8 to 65% slopes	4L	86	0.15
53	Moyerson stony clay loam, 15 to 65% slopes	4L	86	0.1
59	Parachute-Roan loam, 530% slopes	5	56	0.2
61	Patent loam, 3 to 8% slopes	4L	86	0.28
62	Patent loam, 8 to 15% slopes	4L	86	0.28
64	Piceance fine sandy loam, 5 to 15% slopes	3	86	0.28
70	Redcreek-Rentsac complex, 5 to 30% slopes	3	86	0.28
71	Redrob loam	4L	86	0.24
73	Rentsac channery laom, 5 to 50% slopes	4L	86	0.2
74	Rentsac-Moyerson-Rock outcrop complex, 5 to 65% slopes	4L	86	0.2
75	Rentsac-Piceance complex, 2 to 30% slopes	4L	86	0.2
78	Rock outcrop	ROCK		
81	Shawa loam, wet, 0 to 5% slopes	6	48	0.2
86	Sinkson gravelly sandy loam, 8 to 15% slopes	3	86	0.15
89	Tisworth fine sandy loam, 0 to 5% slopes	3	86	0.24
91	Torriorthents-Rock outcrop complex, 15 to 90% slopes	4L	86	0.17
96	Veatch channery loam, 12 to 50% slopes	5	56	0.15
99	Winnemucca-Clayburn loam, 8 to 255 slopes	6	48	0.2
104	Yamac loam, 2 to 15% slopes	6	48	0.28
105	Zoltay clay loam, 1 to 3% slopes	6	48	0.15
106	Zoltay clay loam, 3 to 8% slopes	6	48	0.15
107	Zoltay clay loam, 8 to 15% slopes	6	48	0.15

1 - Wind Erodibility Groups are made up of soils that have similar properties affecting their susceptibility to wind erosion in cultivated areas. These soils assigned to group 1 are the most susceptible to wind erosion, and those assigned to group 8 are the lease susceptible.

2 - Wind Erodibility Index is a numerical value indicating the susceptibility of soil to wind erosion, of the tons per acre per year that can be expected to be lost to wind erosion.

3 - The erosion K factor indicates the susceptibility of soil to sheet and rill erosion by water. Values of K range from 0.02 to 0.69. Other factors being equal, the higher the value, the more susceptible the soil is to sheet and rill erosion from water. The Kw factor indicates the Erodibility of the whole soil.

Table 2.4-2. Mapped soil units found along route in Moffat County, Colorado.

Map Unit	Map Unit name	Wind Erodibility Group[1]	Wind Erodibility Index[2]	Kw Factor[3]
2	Abor silty clay loam, 25 to 65 percent slopes	4L	86	0.28
8	Badland	8	0	0.1
9	Baroid-Eghelm complex, 0 to 3 percent slopes	2	134	0.28
10	Battlement fine sandy loam, 0 to 3 percent slopes	3	86	0.28
11	Battlement silt loam, saline, 0 to 3 percent slopes	4L	86	0.37
12	Berlake sandy loam, 3 to 12 percent slopes	3	86	0.2
13	Berlake sandy loam, 12 to 25 percent slopes	3	86	0.2
14	Berlake-Maysprings complex, 3 to 12 percent slopes	3	86	0.2
22	Bulkley silty clay, 3 to 12 percent slopes	4	86	0.24
23	Bulkley silty clay, 12 to 25 percent slopes	4	86	0.24
24	Bulkley-Quilt complex, 12 to 45 percent slopes	8	0	0.1
44	Cowestglen sandy loam, 0 to 3 percent slopes	3	86	0.2
47	Coyet-Crestman, moist complex, 20 to 50 percent slopes	2	134	0.2
70	Fluvaquents and Haplaquolls soils, frequently flooded	4L	56	0.17
75	Fonce sandy loam, 1 to 8 percent slopes	3	86	0.28
77	Forelle loam, 3 to 12 percent slopes	6	48	0.37
78	Forelle loam, 12 to 25 percent slopes	6	48	0.37
86	Gracot-Maybell complex, 5 to 30 percent slopes	8	0	0.05
87	Gretdivid-Taffom-Abor complex, 10 to 30 percent slopes	2	134	0.15
90	Grieves-Crestman complex, 10 to 40 percent slopes	2	134	0.28
92	Grimm-Ustic Torriorthents, shallow complex, 15 to 45 percent slopes	8	0	0.02
93	Gullied land	8	0	
99	Hesperus fine sandy loam, dry, 2 to 15 percent slopes	3	86	0.24
100	Hesperus loam, 15 to 50 percent slopes	6	48	0.28
105	Ironsprings loamy sand, 1 to 15 percent slopes	2	134	0.15
106	Ironsprings loamy sand, 15 to 30 percent slopes	2	134	0.15
107	Ironsprings-Maysprings-Gretdivid complex, 10 to 20 percent slopes	2	134	0.1

112	Kemmerer-Moyerson complex, 20 to 40 percent slopes	4L	86	0.32
114	Lamphier fine sandy loam, 3 to 25 percent slopes	3	86	
116	Lamphier-Jerry complex, 3 to 25 percent slopes	3	86	
117	Lamphier-Jerry complex, 25 to 65 percent slopes	3	86	
118	Lander loam, 0 to 3 percent slopes	6	48	0.28
128	Maybell sand, 3 to 12 percent slopes	1	220	0.15
129	Maybell sand, 12 to 45 percent slopes	1	220	0.15
130	Maysprings coarse sandy loam, 3 to 12 percent slopes	3	86	0.2
131	Maysprings-Gretdivid complex, 10 to 20 percent slopes	2	134	0.1
134	Morapos loam, 3 to 12 percent slopes	6	48	0.24
149	Pinelli loam, 3 to 12 percent slopes	5	56	0.37
151	Pinelli loam, dry, 3 to 8 percent slopes	5	56	0.37
152	Pinridge loam, 1 to 12 percent slopes	6	48	0.28
153	Pricecreek clay loam, 0 to 4 percent slopes	4L	86	0.2
157	Rentsac-Moyerson complex, 25 to 65 percent slopes	8	0	0.1
161	Rock River sandy loam, 0 to 3 percent slopes	3	86	0.24
162	Rock River sandy loam, 3 to 12 percent slopes	3	86	0.24
163	Rock River sandy loam, 12 to 25 percent slopes	3	86	0.24
168	Ruedloff sandy loam, 1 to 8 percent slopes	3	86	0.28
170	Ryan Park loamy sand, 3 to 15 percent slopes	2	134	0.17
171	Ryan Park sandy loam, 0 to 3 percent slopes	3	86	0.24
173	Ryark-Powderwash complex, 2 to 15 percent slopes	2	134	0.17
174	Ryark-Maybell complex, 1 to 12 percent slopes	2	134	0.17
178	Simanni-Ruedloff complex, 1 to 10 percent slopes	3	86	0.24
181	Stunner sandy loam, 1 to 8 percent slopes	3	86	0.28
186	Talamantes loam, 0 to 6 percent slopes	4L	86	0.37
193	Tisworth fine sandy loam, 0 to 9 percent slopes	3	86	0.24
197	Torriorthents-Rock outcrop, sandstone complex, 25 to 75 percent slopes	3	86	0.15
198	Torriorthents-Rock outcrop, shale complex, 30 to 75 percent slopes	4L	86	0.32
199	Torriorthents-Torripsamments complex, 12 to 40 percent slopes	4L	86	0.24

206	Ustorthents, frigid-Borolls complex, 25 to 75 percent slopes	8	0	0.1
209	Weed sandy loam, 1 to 12 percent slopes	3	86	0.24
216	Yamo loam, 3 to 15 percent slopes	4L	86	0.28

1 - Wind Erodibility Groups are made up of soils that have similar properties affecting their susceptibility to wind erosion in cultivated areas. These soils assigned to group 1 are the most susceptible to wind erosion, and those assigned to group 8 are the lease susceptible.
2 - Wind Erodibility Index is a numerical value indicating the susceptibility of soil to wind erosion, of the tons per acre per year that can be expected to be lost to wind erosion.
3 - The erosion K factor indicates the susceptibility of soil to sheet and rill erosion by water. Values of K range from 0.02 to 0.69. Other factors being equal, the higher the value, the more susceptible the soil is to sheet and rill erosion from water. The Kw factor indicates the Erodibility of the whole soil.

2.5 Existing Vegetation

The project would cross several vegetative community types. Since this is a linear project that crosses many different types of communities, base comparison studies will be performed with the undisturbed areas next to the construction corridor. The EI will consider seasonal conditions of the adjacent cover when assessing post construction vegetation success.

Table 2.5-1 Community types crossed by project route in Colorado (within 50' ROW).

Name*	Acres	% of route
Big sagebrush type.	197.73	34.58
Pinyon-Juniper type.	126.68	22.15
Saltbrush fans and flats type.	64.37	11.26
Dry land crops type.	44.10	7.71
Foothills and mountain grassland type.	38.04	6.65
Deciduous oak type.	32.65	5.71
Bitterbrush shrub type.	28.77	5.03
Irrigated crop type.	24.86	4.35
Mesic upland shrub type.	5.45	0.95
Wyoming big sagebrush type.	3.73	0.65
Shrub dominated wetland/riparian type.	3.61	0.63
Juniper woodland type.	1.80	0.31

Table 2.5-2 Community types crossed by project route in Wyoming (within 50' ROW).

Name	Acres	% of route
Wyoming big sagebrush	229.1	65.6
Saltbush fans and flats	46.7	13.4
Desert shrub	39.6	11.3
Greasewood fans and flats	15.1	4.3
Mixed grass prairie	9.8	2.8
Juniper woodland	8.6	2.5

2.6 Other Stormwater Discharges

Other potential pollution sources include spills, particularly those resulting from vehicle or equipment leaks or refueling accidents. No industrial activities or hazardous waste storage will take place onsite. Discharge will only come from construction activities. This permit does not authorize the discharge of hazardous substances or oil resulting from an on-site spill. The discharge of hazardous substances or oil in stormwater discharges from the construction site must be prevented or minimized in accordance with the Hazardous Materials Management and Spill Prevention, Containment, and Countermeasure Plan (Appendix 7). This permit does not relieve OPPC or Contractor from federal reporting requirements of 40 CFR Part 110, 40 CFR Part 117, and 40 CFR Part 302 relating to spills or other releases of oils or hazardous substances. Where a release containing a hazardous substance or oil in an amount equal to or in excess of a reportable quantity established under either 40 CFR Part 110, 40 CFR Part 117, or 40 CFR Part 302 occurs during a 24-hour period, notice must be provided to the National Response Center (NRC) (800-424-8802) in accordance with the requirements of 40 CFR Part 110, 40 CFR Part 117 and 40 CFR Part 302 as soon as site staff have knowledge of the discharge. Notice will also be given to local BLM and FS offices as soon as the discharge is noticed.

This project includes grading, excavation and storage of soils. Soil that has been disturbed is a potential source of sediment pollution to stormwater. Structural and non-structural BMPs will be used to prevent sediment loading of stormwater from disturbed areas or soil piles as described in the following sections (Stormwater Controls and Exhibit B) and depicted in Exhibit A.

Significant levels of dust/particulate could be generated by the construction activities associated with this project. Soil may also be tracked off-site by vehicles traveling the right-of-way. Rock apron construction entrances are one method of keeping this sediment on site. Other methods for controlling soil tracked off-site are detailed in the permit conditions of CDPHE's Land Disturbance permit. Further information on dust control is described in the Fugitive Dust Control Plan (Appendix 6).

2.7 Non-stormwater Discharges

Construction dewatering and hydrostatic test dewatering are the only non-stormwater discharges that may occur on the project area during construction.

2.7.1 Hydrostatic Testing

If hydrostatic test water is discharged onto the ground, the test water will be filtered through a straw bale dewatering structure or a similar devise to dissipate hydraulic energy, minimize erosion, and remove some sediment from the water. OPPC will obtain a permit from the CDPHE for hydrostatic test discharge and will adhere to all regulations.

2.7.2 Trench Dewatering

The pipeline will be lowered into a trench that is free of standing water. In the event that groundwater or stormwater is encountered during construction within the right-of-way, dewatering of the excavated areas or trenches will be required. Portable water pumps will typically be used at various locations along the right-of-way as needed for dewatering. Where water is pumped from the trench, it will be disposed of in such a manner to avoid flooding and erosion of land both on and off the right-of-way. Dewatering structures will be placed at the discharge point where erosion and siltation need to be controlled.

Trench dewatering discharges will be infrequent, if at all, and discharge will be in the same manner

as previously described for hydrostatic test water discharges. Because the source of the trench water will be groundwater or stormwater, the water quality is likely to be comparable to the groundwater at the site, with the addition of sediments from the project-related ground disturbances. All permit stipulations will be followed.

2.8 Receiving Waters

The receiving waters in Colorado are: Piceance Creek, Dry Fork Piceance Creek, White River, Strawberry Creek, Channel Creek, Deception Creek, Spring Creek, Little Snake River, and other unnamed tributaries to these waters.

The receiving waters in Wyoming are: East Fork Cherokee Creek, Sand Creek, Willow Creek, Hanson Draw, and the Red Lakes. There are numerous unnamed tributaries to these receiving water as well.

3.0 STORMWATER CONTROLS

BMPs will be used to minimize erosion and sediment transport during the construction activities associated with the proposed project (Exhibit B). All control measures must be properly selected, installed, and maintained in accordance with any relevant manufacturer specifications and good engineering practices. If periodic inspections or other information indicates a control has been used inappropriately, or incorrectly, the operator must replace or modify the control for site situations as soon as practicable.

The Environmental Inspector (EI) will be responsible for ensuring that appropriate erosion control measures are installed and maintained at drainage crossings and other outfall areas along the project. The EI will maintain status reports and all appropriate records for compliance with permit requirements imposed by federal, state, or local agencies. Records will include the dates when major grading activities occur; the dates when stabilization measures are initiated; and the dates when construction temporarily or permanently ceases on a portion of the site.

The potential for erosion and sediment transport is greatest in areas where ground surfaces have been disturbed and soil is exposed to wind and water. In an effort to protect existing water quality, both temporary and permanent BMPs and other erosion control measures have been designed to minimize the effects of erosion caused by stormwater runoff. In most cases, a combination of vegetative, structural, and stormwater management practices are used to control erosion and transport of sediment. Typical control measure diagrams are included with this plan. The final engineering and design drawings illustrate specific locations along the pipeline route for placement of the appropriate erosion control measures.

Temporary measures to control sedimentation and erosion will be used and maintained during all phases of construction. Selection of appropriate erosion control materials will be selected based on soil properties, steepness of the slope, and anticipated surface flow or runoff. In general, wattles and/or silt fence will be the appropriate control measures to be used for sediment and erosion control during construction in the vicinity of drainage crossings or adjacent to roadways. As conditions require, other control measures such as straw bale barriers, rock check-dams, slope breakers, and sediment traps or basins may be considered. Conditions vary throughout the project and these decisions should be made on a site specific basis.

3.1 Erosion and Sediment Controls

The on-site EI will be responsible for ensuring that appropriate erosion and sediment control measures are installed and maintained at drainage crossings and other specific locations along the pipeline routes.

During construction, temporary erosion-control measures, including wattles, silt fences, straw bale structures, slope breakers, diversion ditches, and terraces should be employed as deemed necessary to reduce erosion of the disturbed areas. In most cases, natural fiber wattles are preferred. These devices generally require less maintenance than silt fence and straw bales and will eventually degrade into the ground. On slopes greater than 40%, erosion control mats may be used. For slopes less than 40% but greater than 15%, mulch will be used to control erosion.

Sediment barriers and erosion-control measures will be installed at all drainages crossed by the pipeline route. The placement locations will be identified and implemented by the EI before construction reaches these areas. If the amount of topsoil removed in these areas is sufficient to create a trench that will contain sediment within the ROW (4 to 12 inches below grade), sediment barriers may not be necessary. These will generally be an uncommon occurrence and must be approved by the EI before this method can be used.

After backfill is in place, a pneumatic-tired vehicle may run down the trench line to consolidate and compact the materials. Topsoil will be replaced and excess rock will be removed from the surface. A crown may be left over the trench line to approximately 8 to 12 inches in height to allow for further settlement.

Sediment controls are generally designed to retain sediment on-site to the extent feasible. Sediment will be removed from the sediment traps when capacity of control is reduced by 50 percent. Velocity dissipation devices must be placed at discharge locations including culverts and spill ways to reduce sediment loads. Rock, fiber wattles, straw bales, or silt fence could be used. Slash from ROW clearing could also be used in conjunction with the devices above. These controls will slow the water velocity, decrease erosion, and decrease sediment transport, which protect the water quality in receiving streams, wetlands, etc.

There will be no off-site soil storage areas, overburden stockpiles, or borrow areas. The stockpiled topsoil or backfill materials will be stored within the construction right-of-way or within the temporary work areas. Soil storage areas will be located above the high water mark of drainages, outside of riparian zones, and not in areas where the material could be easily washed into drainages. Stockpiled topsoil or spoil will not be exposed near a stream channel or riparian area for more than 30 days. Instead, BMPs will be installed around these piles.

In the event there is stream flow within drainages, a flumed or dry-ditch construction method could be implemented so the construction zone is free of water flow. Trenching and backfill work within drainages will generally be completed within 24 hours, unless site-specific conditions make completion within 24 hours infeasible.

Depending on the depth to groundwater or frequency and duration of storm events, the pipeline trench may fill with groundwater seepage or stormwater runoff. Trenches will be dewatered as needed in such a manner that no heavily silt-laden water flows into drainages. Sediments BMPs mentioned above should be utilized as needed during these operations.

3.2 Structural Practices

During construction, erosion-control structures, including water bars, diversion ditches, and terraces, will be employed as deemed necessary to reduce erosion and runoff from the right-of-way to adjacent areas. Construction and/or maintenance of temporary roads and bridges, temporary diversion of streams, stabilization of soil to support heavy equipment, and various other kinds of practices may be needed within the right-of-way.

Permanent slope breakers or terraces will be constructed across the right-of-way on sloping

ground to prevent erosion where necessary. On steep grades, earth-filled sacks or stone riprap may be necessary to stabilize the ground surface. The terrain will be re-contoured as close as possible to the original condition. Entrance and exit points of the project will be stabilized so that mud is not carried out onto public roads by construction vehicles. Mud and stone will be removed from entrances as needed.

3.3 Non-Structural Practices

During clearing of the right-of-way and construction activities, efforts will be made to preserve existing vegetation by clearing the right-of-way to a minimum width that is necessary for safe and efficient construction. In riparian areas, the clearing will be minimized as much as possible to preserve riparian vegetation. Mulch could be used in stabilization of banks and slopes. All disturbed areas will be reseeded. Rocks and slash from right-of-way clearing may be spread across the right-of-way during final reclamation to further control erosion and sediment.

4.0 OTHER CONTROLS

The following control measures and good housekeeping practices will be implemented to prevent or minimize potentially polluting construction materials from contact with stormwater:

- Water sprinkling will be implemented for control of airborne dust along the construction right-of-way and on unpaved haul roads and other graded traffic routes;
- Topsoil and spoil storage piles will be sprayed, as needed, to minimize the effects of wind erosion and to reduce fugitive dust. Conditions will be monitored throughout construction and the right-of-way will be re-sprayed, as needed;
- Regular disposal of garbage, rubbish, construction wastes, and sanitary waste will be maintained at all times during construction. Sanitary sewage facilities (portable chemical toilets) will be provided by Contractor at all work locations. Sanitary waste will be collected and removed for disposal at an appropriate licensed sewage disposal facility. No sewage will be buried, dumped or discharged, to waters of the U.S. or state;
- Storage areas that are protected from stormwater runoff will be provided for chemicals, paints, solvents, fuel, lubricating oils, and other potentially toxic or hazardous materials;
- All hazardous materials or products will be properly contained and disposed of in accordance with applicable laws, rules, and regulations. No wastes of imported materials will be buried, dumped, or discharged to waters of the U.S. or state;
- In Colorado, equipment will not be refueled or lubricated within 100 feet of any waterway, riparian area, floodplain, or wetland. Chemicals, paints, solvents, fuel, lubricating oils, and other potentially toxic or hazardous materials will not be stored within 100 feet of waterways or wetlands. Within Wyoming, the set back will be 500 feet from all permanent waters, wells, springs, wetlands, and riparian areas, as well as 100 feet from the inner gorge of ephemeral stream channels ;
- Any spills of liquid or dry materials that have occurred will be promptly cleaned up. Spills of toxic or hazardous material will be reported to the appropriate federal, state, or local government agency;
- If any measurable quantity of sediment is discharged from the right-of-way as a result of structural failure or lack of designed capacity of temporary erosion control measures, the sediment will be cleaned up as soon as practicable and replaced on the right-of-way or properly disposed of in a manner approved by the general permit;
- Gravel/stone ramps will be installed at access points to public roadways to prevent or minimize tracking of mud, dirt, sediment, or similar materials onto the roadway if necessary. Deposits that have been tracked by vehicles or have been transported off the

right-of-way by wind or stormwater will be promptly cleaned up;

- Construction equipment and vehicles will be inspected for leaks, and necessary repairs will be made before returning the equipment to service. All equipment will be cleaned and inspected and no leaking equipment will be allowed within the waterway; and
- Wash-down areas protected from stormwater runoff will be provided for construction equipment and vehicle cleanup.

Hazardous materials and petroleum products to be used in construction of the pipeline are limited to fuel for construction equipment and vehicles as well as small quantities of paints and solvents. A plan has been developed by OPPC in the event that a previously unreported or unanticipated hazardous waste or contaminated site is discovered during construction.

5.0 PERMANENT STABILIZATION PRACTICES

After the trench has been backfilled, the entire right-of-way will be returned to natural contours where possible, and compacted sufficiently to minimize erosion or excessive future settlement. Natural drainage patterns will be restored and an effective vegetation stabilization technique should be employed where needed, especially along stream banks and high erosion areas.

Any temporary water bars previously installed should be restored for permanent use and new water bars installed. The spacing of these water bars on slopes is site specific depending on slope percent, precipitation, soil/rock material, and natural drainage patterns. Table 5-1 indicates typical spacing requirements. Natural fiber wattles should also be utilized to slow runoff and trap sediment.

Table 5-1 Typical Water Bar Spacing

Slope (percent)	Spacing (feet)
5-15	300
15-30	200
30+	100

In areas of potentially high erosion, more effective stabilization techniques could be employed, such as stone riprap and check damns. Other natural products can be used such as log bars and slash. For permanent devices, natural (biodegradable) products are preferred. These will blend back into the terrain after stabilization is achieved. Please see Appendix A for typical practices.

Recontouring to natural lines and grade will be accomplished without disruption to adjacent, undisturbed habitat. All areas disturbed by construction will be restored and reseeded. An appropriate seed mix for the area as approved by the applicable land management agency is provided in Attachment 3 of the Environmental Protection Plan in the Plan of Development. In arid, semiarid, and drought-stricken areas where initiating perennial vegetative stabilization measures is not possible after construction activities have temporarily or permanently ceased, final vegetative stabilization measures will be initiated as soon as feasible or at a time recommended by the fee-landowner, the State, of the BLM.

Damage to roadside drainage structures will be minimized by re-grading and reconstructing roads to drain properly. A road maintenance program for roads disturbed by the project will be implemented in conjunction with appropriate permitting agencies, if applicable.

A post-construction inspection of the pipeline will be conducted by monitoring personnel (EI). The EI will be responsible for ensuring that appropriate records are maintained, dated, signed, and retained at the construction site for major grading activities, when stabilization measures are initiated, and when construction ceases.

6.0 INSPECTION, MAINTENANCE, AND MODIFICATIONS

6.1 Inspection

During construction, qualified personnel will inspect disturbed areas, structural control measures, and locations where vehicles access the right-of-way. "Qualified personnel" means a person knowledgeable in the principles and practice of erosion and sediment controls who possesses the skills to assess conditions at the construction site that could impact stormwater quality and to assess the effectiveness of any sediment and erosion control measures selected to control the quality of stormwater discharges from the construction activity.

During construction, inspections must be conducted once every 14 calendar days and within 24 hours of any precipitation or snow melt event that exceeds 0.5 inches. Inspection frequency can be reduced to at least once every month if the entire site is temporarily stabilized, if runoff is unlikely due to winter conditions, or if construction is occurring during seasonal arid periods in arid or semi-arid areas. After construction activities are completed, inspection should occur at least once a month until the project area is stable. Inspection would not be required during the winter if snow covers the entire site. This exemption is applicable only during the period when melting conditions do not exist.

Inspections must include all areas of the site disturbed by construction activity and areas used for storage of materials that are exposed to precipitation. Inspectors must look for evidence of, or the potential for, pollutants entering the stormwater conveyance system. Sedimentation and erosion control measures identified in this plan must be observed to ensure proper operation. Discharge locations must be inspected to ascertain whether erosion control measures are effective in preventing significant impacts to waters of the United States, where accessible. Where discharge locations are inaccessible, nearby downstream locations must be inspected to the extent that such inspections are practicable. Locations where vehicles enter or exit the site must be inspected for evidence of off-site sediment tracking.

Utility line installation, pipeline construction, and other examples of long, narrow, linear construction activities may limit the access of inspection personnel to the project areas. Inspection of these areas could require that vehicles compromise temporarily or even permanently stabilized areas, cause additional disturbance of soils, and increase the potential for erosion. In these circumstances, controls must be inspected on the same frequencies as other construction projects, but representative inspections may be performed. For representative inspections, personnel must inspect controls along the construction site for 0.25 mile above and below each access point where a roadway, undisturbed right-of-way, or other similar feature intersects the construction site and allows access to the areas described above. The conditions of the controls along each inspected 0.25 mile segment may be considered as representative of the condition of controls along that reach extending from the end of the 0.25 mile segment to either the end of the next 0.25 mile inspected segment, or to the end of the project, whichever occurs first.

The spread of noxious weeds on the project site must also be noted. Weeds often spread quickly after land disturbance, even when proper seeding has been implemented. Many local and state agencies have stipulations or provide guidelines for controlling noxious weed infestation. Monitoring of these weeds should be incorporated into the inspection program. The operator is responsible for weed mitigation. Noxious weeds could be controlled by utilizing one or more of the following: biological control, cultural control, herbicide control, or physical control. The county weed specialist can be contacted for assistance in weed control. More information can be obtained from the Noxious Weed Management Plan in Appendix 9 of the POD.

An inspection report will be immediately prepared and signed by the EI following each inspection and will be certified in accordance with the Stormwater Construction Permit/General Construction Stormwater Permit. Copies of the inspection reports will be retained at the construction site or office. A copy of the Inspection Form is located in Appendix C.

An "Incidence of Noncompliance" report will be completed by the EI for any violation of the stormwater pollution prevention plan observed during any inspection conducted. The reports will include information on the cause on noncompliance, the corrective action taken to prevent further causes of noncompliance, and a statement detailing any environmental impact that may have resulted from the noncompliance.

After final stabilization of the construction project and it has been determined by the EI the project area has regained 70% of the background cover, a Notice of Termination (NOT) can be filed for the permit(s). The NOT forms are included in Appendix D. Copies of all records and information resulting from monitoring activities required by this permit will be retained by OPPC for a minimum of 3 years.

6.2 Maintenance

The operator will be responsible for the implementation and maintenance of this plan. Work may be performed by a subcontractor retained by the operator. OPPC's designated EI will identify BMPs for maintenance or replacement. Additional BMPs may be needed as circumstances change.

6.3 SWMP Modification

Typically, some BMPs will have to be modified to adapt to changing environmental conditions and construction phases. The EI will determine the changes needed to reflect actual field conditions. In some cases, BMPs may need to be rebuilt, replaced, moved, or added. This plan must be revised if changes are necessary.

7.0 REFERENCES

Colorado Division of Wildlife, Habitat Resources Section, 1998. Colorado Gap Analysis Land Cover Map. Denver, Colorado.

Munn, L.C. and C. S. Arneson, 1999. Draft 1:100,000-Scale Digital Soils Map of Sweetwater County: University of Wyoming Agricultural Experiment Station.

Soil Survey Staff, Natural Resources Conservation Service, United States Department of Agriculture. Web Soil Survey. http://websoilsurvey.nrcs.usda.gov/ accessed June 20, 2008.

Tripp, W., L. Williams, D. Alstatt, J. Rawinski, and C. Spears. 1982. Soil survey of Rio Blanco County Area, Colorado. US Department of Agriculture, Soil Conservation Service. 219 pages + maps

EXHIBIT A
ALIGNMENT SHEETS

See Alignment Sheets drawings provided under a separate cover.

EXHIBIT B
BMPs

(refer to Attachment 1 of Appendix 12)

EXHIBIT C
INSPECTION FORM

CH2MHILL
TRIGON EPC

EROSION CONTROL CHECKLIST

For the week ending:

Last precipitation event / amount:

Erosion control measures were evaluated daily in areas of active construction, weekly in areas not under active construction, and within 24 hours in areas receiving a 1/2" or greater precipitation event. Areas requiring maintenance have been documented in the Daily Environmental Reports.

Milepost	Station Range		Feature (e.g., wash, slope, access road)	Construction Status			Erosion Control Type						Comments
	Begin	End		Active	Inactive	Complete	Water Bars	Driveable Berms	Trench Breakers	Silt Fence	Straw Bales	Mulch	

CH2MHILL
TRIGON EPC

HAZARDOUS MATERIALS AND WASTES INSPECTION LOG

For each item listed below, Contractor will indicate whether existing conditions are acceptable (A) or unacceptable (U). Contractor will inspect all storage facilities on a regular basis, but not less than weekly. Contractor will keep records of all inspections on file. Contractor will provide a copy of the completed form to the Environmental Inspector on a weekly basis.

STORAGE AREAS FOR FUELS, LUBRICANTS AND CHEMICALS

General

____Construction yard or storage areas secured

____Storage areas properly prepared and signed

____Material Safety Data Sheets available

____SPCCP available

____ Emergency response equipment available on-site

Hazardous Materials Management

____No evidence of spilled or leaking materials

____Incompatible materials separated

____All containers labeled properly and securely closed

____All containers upright

____No evidence of container bulging, damage, rust or corrosion

Secondary Containment Areas

____Containment berm intact and capable of holding 110% of material stored plus precipitation

____Lining intact

____No materials overhanging berms No materials stored on berms

____No flammable materials used for berms

Compressed Gases

____Cylinders labeled with contents

____Cylinders secured from falling

____Oxygen stored at least 25 feet away from fuel

CH2MHILL
TRIGON EPC

HAZARDOUS MATERIALS AND WASTES INSPECTION LOG

HAZARDOUS WASTE MANAGEMENT

Waste Container Storage

____No evidence of spilled or leaking wastes

____Adequate secondary containment for all wastes

____Separate containers for each waste stream-no piles

____Waste area not adjacent to combustibles or compressed gases

____All containers securely closed

____Bungs secured tightly

____Open-top drum hoops secured

____All containers upright

____No evidence of container bulging, corrosion

____No severe container damage or rust

____Containers are compatible with waste

____No smoking and general danger/warning signs posted

Waste Container Labeling

____Containers properly labeled

____Name, address and EPA ID number or ID Number of generator listed (Not required if Contractor is an exempt small quantity generator.)

____Accumulation start date listed

____Storage start date listed

____Chemical and physical composition of waste listed

____Hazardous property listed

Non-Hazardous Waste Areas

____No litter in yard

____No hazardous wastes or used oil mixed with trash

____Empty oil and aerosol containers for disposal are completely emptied

CH2MHILL
TRIGON EPC

HAZARDOUS MATERIALS AND WASTES INSPECTION LOG

CORRECTIVE ACTIONS TAKEN (Required for all unacceptable conditions)

_____

_____

_____

_____

_____

_____

_____

_____

_____

_____

_____

_____

_____

_____

_____

_____

_____

_____

_____

Date: _____ Contractor: _____

Inspected by: _____

Signature: _____

EXHIBIT D
NOTICE OF TERMINATION