2.0 DESCRIPTION OF THE PROPOSED ACTION

2.1 PROPOSED FACILITIES

NBP proposes to construct and operate a natural gas transmission pipeline system from Ehrenberg, Arizona through Riverside and Imperial Counties, California to an interconnection at the international border between the United States and Mexico. The system would consist of an underground pipeline, one new natural gas compressor station, two meter stations, and related facilities as described below. A general project location map is provided on figure 2.1-1.

2.1.1 Pipeline Facilities

The natural gas pipeline facilities proposed by NBP would consist of about 79.9 miles of 36- and 30-inch-diameter pipeline. Table 2.1.1-1 shows the milepost range and pipeline diameter for each county crossed by the proposed route. Detailed facility maps are contained in appendix B. NBP's proposed pipeline facilities include:

- 0.1 mile of 36-inch-diameter natural gas pipeline (interconnect pipeline) extending from a tie-in with El Paso to NBP's Ehrenberg Compressor Station in La Paz County, Arizona;
- 11.7 miles of 36-inch-diameter natural gas pipeline (mainline pipeline) extending from MP 0.0 at the Ehrenberg Compressor Station in La Paz County, Arizona to MP 11.7 in Riverside County, California; and
- 68.1 miles of 30-inch-diameter natural gas pipeline (mainline pipeline) extending from MP 11.7 in Riverside County, California through Imperial County, California to MP 79.8 at the interconnection at the international border between the United States and Mexico.

TABLE 2.1.1-1

Pipeline Facilities Associated with the North Baja Pipeline Project

Facility	Pipe Diameter (inches)	Mileposts	Length (miles)	County, State
Interconnect Pipeline	36	a/	0.1	La Paz, Arizona
Mainline Pipeline	36	0.0 - 0.2	0.2	La Paz, Arizona
		0.2 - 11.7	11.5	Riverside, California
Subtotal			11.7	
	30	11.7 - 22.3	10.6	Riverside, California
		22.3 - 79.8	57.5	Imperial, California
Subtotal			68.1	
Total			79.9	

a/ The interconnect pipeline between the tie-in with El Paso and the Ehrenberg Compressor Station is not mileposted.

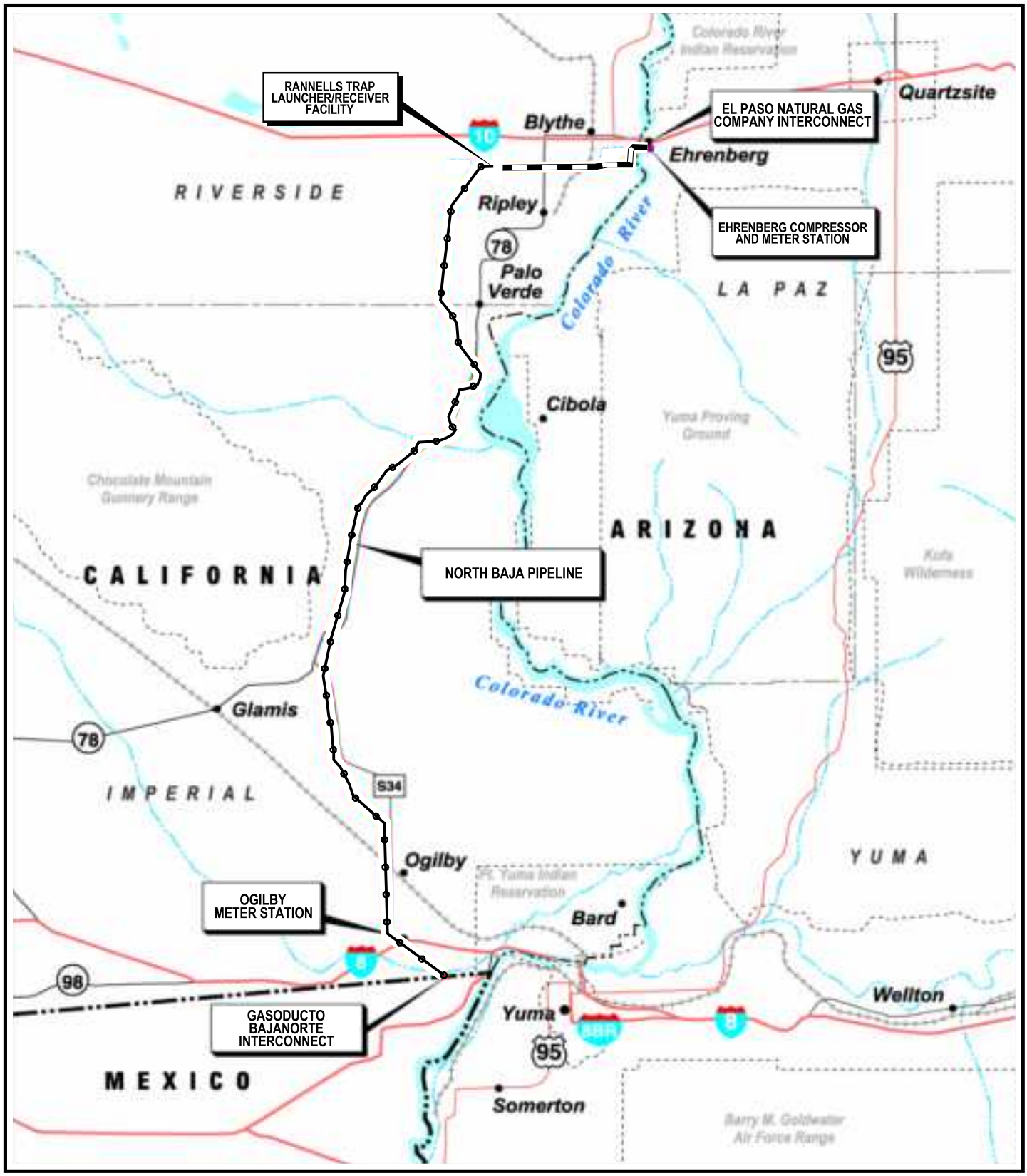

LEGEND

36-Inch-Diameter Pipeline

30-Inch-Diameter Pipeline

Figure 2.1-1

North Baja Pipeline Project

General Project Location

La Paz County, Arizona and

Riverside and Imperial Counties, California

2.1.2 Aboveground Facilities

Associated aboveground facilities proposed by NBP include (see table 2.1.2-1):

- a new compressor station (Ehrenberg Compressor Station) consisting of three gas-fired centrifugal compressor units for a total hp ranging from 18,810 to 21,600 (with one additional spare unit) [1/] at the El Paso interconnect in La Paz County, Arizona;

- two meter stations, one at the interconnect with El Paso at the Ehrenberg Compressor Station site (Ehrenberg Meter Station) and one in Imperial County, California near the interconnect at the international border (Ogilby Meter Station);

- a pig [2/] launcher facility at the Ehrenberg Compressor Station site; a pig receiver facility at the Ogilby Meter Station site; and a separate pig launcher/receiver facility (Rannells Trap) in Riverside County, California; and

- seven mainline valves (MLV), one each at the Ehrenberg Compressor Station site, Rannells Trap, and Ogilby Meter Station, and another four spaced as required along the proposed pipeline route.

TABLE 2.1.2-1

Aboveground Facilities Associated with the North Baja Pipeline Project

Facility	Milepost	County, State
Compressor Station		
Ehrenberg Compressor Station three units for a total hp ranging from 18,810 to 21,600 and one spare unit	0.0	La Paz, Arizona
Meter Stations		
Ehrenberg a/	0.0	La Paz, Arizona
Ogilby	75.2	Imperial, California
Pig Launchers/Receivers		
36-inch-diameter pig launcher a/	0.0	La Paz, Arizona
Rannells Trap (pig launcher/receiver) b/	11.7	Riverside, California
30-inch-diameter pig receiver c/	75.2	Imperial, California
Mainline Valves (MLVS)		
MLV #1 a/	0.0	La Paz, Arizona
MLV #2	5.7	Riverside, California
MLV #3 d/	11.7	Riverside, California
MLV #4	28.0	Imperial, California
MLV #5	41.6	Imperial, California
MLV #6	60.3	Imperial, California
MLV #7 c/	75.2	Imperial, California

a/ Located at the Ehrenberg Compressor Station site.
b/ The pipeline diameter will change from 36 inches to 30 inches at the Rannells Trap. The Rannells Trap will include a 36-inch-diameter pig receiver and a 30-inch-diameter pig launcher.
c/ Located at the Ogilby Meter Station site.
d/ Located at the Rannells Trap.

1/ NBP has filed two potential configurations for the compressor station. One configuration would have four 6,270-hp turbines and one configuration would have four 7,200-hp turbines. In either scenario only three compressor units would be operational at any given time; the fourth unit would act as a spare unit.

2/ A pig is an internal tool used to inspect a pipeline for potential leaks or damage.

2.2 LAND REQUIREMENTS

Construction of the North Baja Pipeline Project would disturb approximately 959.6 acres of land, including the pipeline construction right-of-way, temporary extra workspace, access roads, contractor yards, and the aboveground facilities. Of this total, about 757.2 acres would be disturbed by the interconnect and mainline pipeline construction right-of-way, 48.9 acres would be disturbed by temporary extra workspace, 89.5 acres would be disturbed by access roads, and 50.4 acres would be disturbed by contractor yards. The aboveground facilities would affect 13.6 acres.

Approximately 454.6 acres of the 959.6 acres used for construction would be required for operation of the project. Of this total, 441.0 acres would be for the interconnect and mainline pipeline permanent rights-of-way and 13.6 acres would be for the aboveground facilities. The remaining 505.0 acres of land would be restored and allowed to revert to former use. Table 2.2-1 summarizes the land requirements for the North Baja Pipeline Project.

TABLE 2.2-1

Summary of Land Requirements Associated with the North Baja Pipeline Project

Facility	Land Affected During Construction (acres)	Land Affected During Operation (acres)
Interconnect and Mainline Pipeline Right-of-Way a/	757.2	441.0
Temporary Extra Workspace	48.9	0.0
Access Roads	89.5	0.0
Contractor Yards		
18th Avenue Contractor Yard	15.2	0.0
Ripley Contractor Yard	30.2	0.0
Ogilby Contractor Yard	5.0	0.0
Contractor Yards Subtotal	50.4	0.0
Aboveground Facilities		
Ehrenberg Compressor Station	12.4	12.4
Ehrenberg Meter Station b/	0.0	0.0
Ogilby Meter Station	0.9	0.9
36-inch-diameter launcher b/	0.0	0.0
Rannells Trap	0.3	0.3
30-inch-diameter receiver c/	0.0	0.0
MLVs d/	0.0	0.0
Aboveground Facilities Subtotal	13.6	13.6
Project Total	959.6	454.6

a/ Based on an 80-foot-wide construction right-of-way and a 50-foot-wide permanent right-of-way in all areas except along 18th Avenue. Based on a 60-foot-wide construction right-of-way and a 5-foot-wide permanent right-of-way along 18th Avenue. The operation total reflects a 10-foot-wide maintained area in wetlands (see section 5.4).

b/ Located at the Ehrenberg Compressor Station site and included in the acreage affected by the Ehrenberg Compressor Station.

c/ Located at the Ogilby Meter Station site and included in the acreage affected by the Ogilby Meter Station.

d/ Three MLVs would be located within the fencelines of the other three aboveground facilities. The other four MLVs would be located within the permanent right-of-way.

Approximately 72 percent of the land affected by construction and operation of the North Baja Pipeline Project would be on public lands managed by the BLM (60 percent)[3/], California counties (10 percent), CSLC (1 percent), or the States of Arizona or California (1 percent). The remainder of the land that would be affected is privately owned. A detailed description of land use and land ownership is presented in section 4.8.1.

2.2.1 Pipeline Rights-of-Way and Additional Construction Work Areas

Of the 79.9 miles of proposed pipeline, approximately 50.1 miles (63 percent) would be constructed in or adjacent to various existing rights-of-way, including those areas within a BLM-designated utility corridor (see table 2.2.1-1) (see section 4.8.4.1 for further discussion of designated utility corridors). An additional 14.2 miles (18 percent) would be located within a BLM-designated utility corridor but not in or adjacent to existing rights-of-way. The remaining 15.6 miles (19 percent) of the proposed pipeline would be constructed on newly created right-of-way that does not parallel existing rights-of-way and is not within a BLM-designated utility corridor.

For the majority of the pipeline route, the construction right-of-way would be 80 feet wide, with 50 feet retained as permanent right-of-way. However, where the pipeline would be installed within or abutting the paved portion of 18th Avenue on the southern outskirts of Blythe, California (a distance of about 7.5 miles), the construction right-of-way would be about 60 feet wide, with 5 feet retained as permanent right-of-way. See figure 2.2.1-1, sheets 1 through 2, for typical right-of-way cross-sections for the various rights-of-way that NBP would use along its proposed route. NBP's actual use of workspace (*e.g.*, spoil storage, equipment travel lane) within its construction right-of-way may vary within the total width of the construction right-of-way.

In addition to the construction right-of-way, NBP has identified temporary extra workspaces that would be required for construction at waterbody, road, and railroad crossings, as well as at directional drill work sites, steep side slopes, and near the beginning and end of the mainline construction spread. The locations and sizes of the identified temporary extra workspaces are listed in table C-1 in appendix C.

NBP proposes to temporarily use 37 roads to access the right-of-way during construction. These access roads are primarily existing dirt road and/or jeep trails that would be graded or otherwise improved as needed to move equipment and materials to the construction right-of-way. Approximately 0.4 mile of new temporary access roads would be constructed for the project, of which 0.02 would be permanently retained. Table C-2 in appendix C lists the proposed access roads and identifies the type of improvements that would be required to use each road. NBP has stated that it has no plans to maintain an improved permanent right-of-way for operation and maintenance of the pipeline facilities. However, NBP would have to maintain access to all portions of the permanent right-of-way by four-wheel drive vehicles in order to conduct emergency and periodic maintenance.

Three contractor yards would be used on a temporary basis to support construction activities. The 18th Avenue Contractor Yard would be on 15.2 acres of industrial/commercial land at MP 5.7 of the proposed pipeline in Riverside County, California. This yard would be accessible from 18th Avenue to the north and a railroad track to the south. The Ripley Contractor Yard, also in Riverside County, would be on 30.2 acres of industrial/commercial land located at the Atchison, Topeka, and Santa Fe railroad spur in the town of Ripley, approximately 3 miles south of the proposed pipeline between MPs 8.5 and 8.9. The Ogilby Contractor Yard would be on 5.0 acres of open land (desert) adjacent to the Ogilby Meter Station at MP 75.1 in Imperial County, California. This site would be located north of Interstate 8 (I-8) and east of Ogilby Road.

3/ Includes lands administered by the BLM but released to the BOR.

TABLE 2.2.1-1

Location of Adjacent Existing Rights-of-Way in Relation to the Proposed North Baja Pipeline Route

Beginning Milepost	Ending Milepost	Segment Length (miles)	Existing Easement	Relationship to Existing Rights-of-Way
Interconnect Pipeline a/		0.1	None, new right-of-way	Not Applicable (NA)
Mainline				
0.0	0.4	0.4	None, new right-of-way	NA
0.4	1.1	0.7	SOCAL Pipelines	East
1.1	1.2	0.1	None, new right-of-way	NA
1.2	2.3	1.1	D-10-13 Canal	East
2.3	2.9	0.6	18th Avenue (unpaved) b/	North
2.9	10.4	7.5	18th Avenue (paved) b/	North
10.4	11.4	1.0	18th Avenue (unpaved) b/	South
11.4	12.1	0.7	None, new right-of-way	NA
12.1	22.3	10.2	Transmission Line	East
22.3	24.3	2.0	None, new right-of-way	NA
24.3	25.3	1.0	Stallard Road	West
25.3	25.4	0.1	None, new right-of-way	NA
25.4	26.4	1.0	Stallard / Palo Verde Road	West
26.4	27.1	0.7	None, new right-of-way	NA
27.1	28.0	0.9	Stallard Road	West
28.0	35.4	7.4	None, new right-of-way	NA
35.4	35.8	0.4	Walters Camp Road	South
35.8	39.0	3.2	None, new right-of-way	NA
39.0	40.1	1.1	Transmission Line	West
40.1	40.8	0.7	Blythe-Ogilby Road	East
40.8	41.6	0.8	None, new right-of-way	NA
41.6	41.8	0.2	Blythe-Ogilby Road	West
41.8	42.5	0.7	None, new right-of-way	NA
42.5	44.1	1.6	Blythe-Ogilby Road	East
44.1	46.5	2.4	None, new right-of-way	NA
46.5	47.3	0.8	Blythe-Ogilby Road	East
47.3	47.4	0.1	None, new right-of-way	NA
47.4	47.6	0.2	Blythe-Ogilby Road	East
47.6	47.8	0.2	None, new right-of-way	NA
47.8	51.8	4.0	Transmission Line	West
51.8	55.0	3.2	None, new right-of-way	NA
55.0	61.0	6.0	Ogilby Road	West
61.0	61.6	0.6	None, new right-of-way	NA
61.6	64.9	3.3	Walker Way Road	West
64.9	66.8	1.9	None, new right-of-way	NA
66.8	74.6	7.8	Ogilby Road	West
74.6	79.8	5.2	None, new right-of-way	NA

a/ The interconnect pipeline between the tie-in with El Paso and the Ehrenberg Compressor Station is not mileposted.

b/ Except for 18th Avenue, only the construction right-of-way would overlap the existing easements. At 18th Avenue, the entire construction and permanent rights-of-way would be within the existing easement. For details see figure 2.2.1-1.

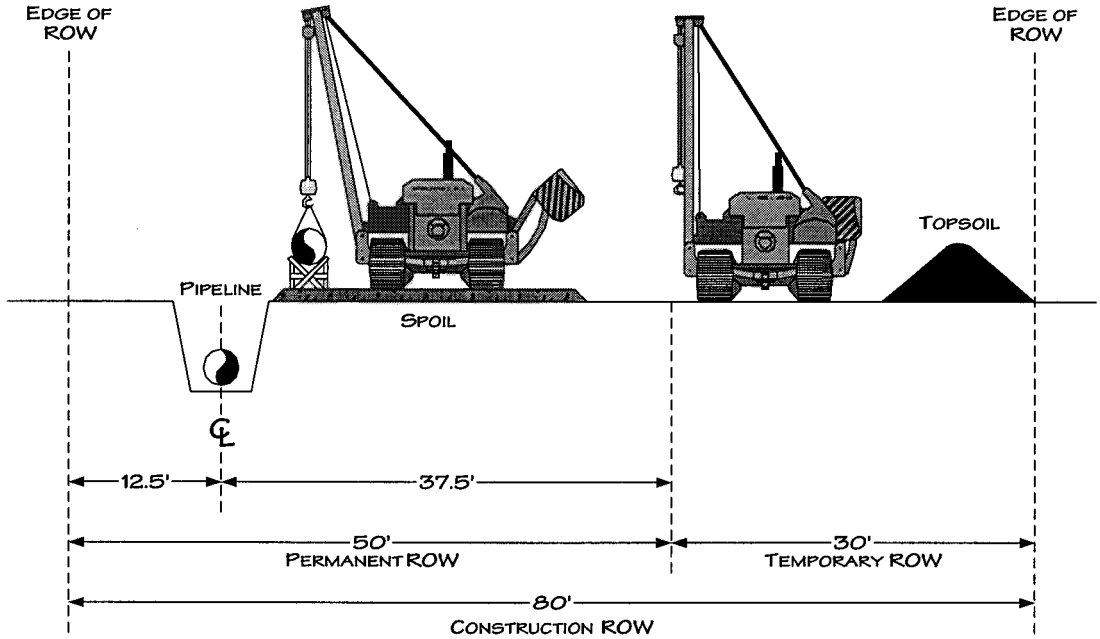

Typical Workspace Requirements

Cross Country Type II

Looking West or South

MPs 0.0 to 1.2 — MPs 2.3 to 2.9

MPs 10.4 to 11.7 (looking east) — MPs 22.4 to 79.8

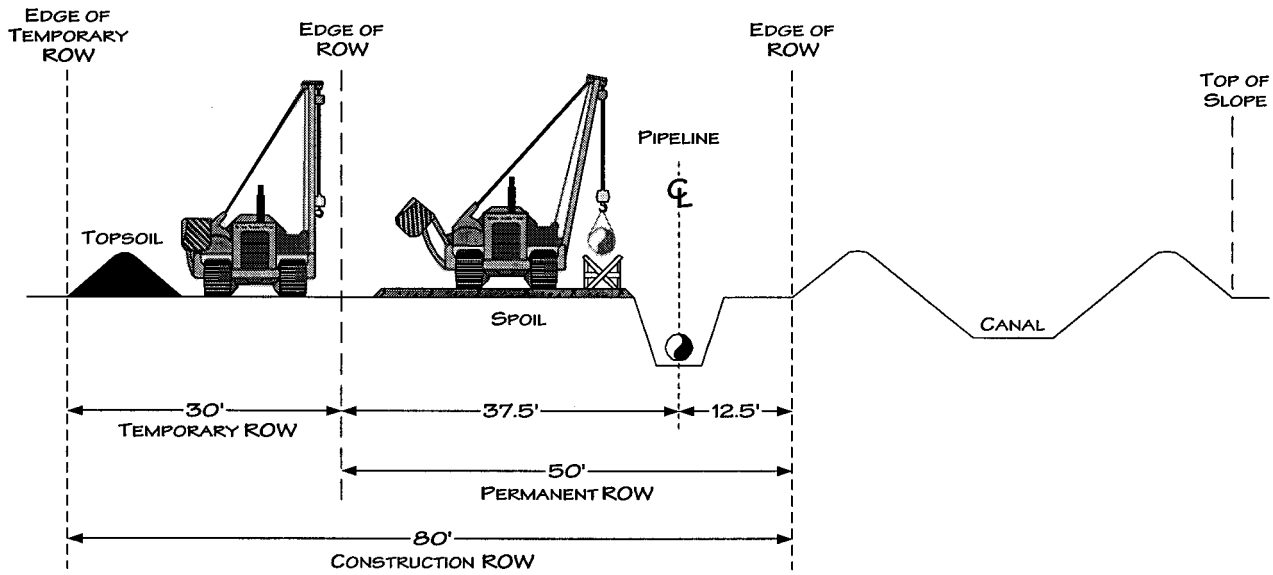

Typical Workspace Requirements Adjacent to Canal

Looking South

MPs 1.2 to 2.3

NOTE:
CONFIGURATION DOES NOT INCLUDE TEMPORARY EXTRA WORKSPACE AT CROSSINGS

For environmental review purposes only.
K:\748\2000032\268\OW01.VSD

Figure 2.2.1-1

North Baja Pipeline Project

Typical Right-of-Way Cross Sections

Sheet 1 of 2

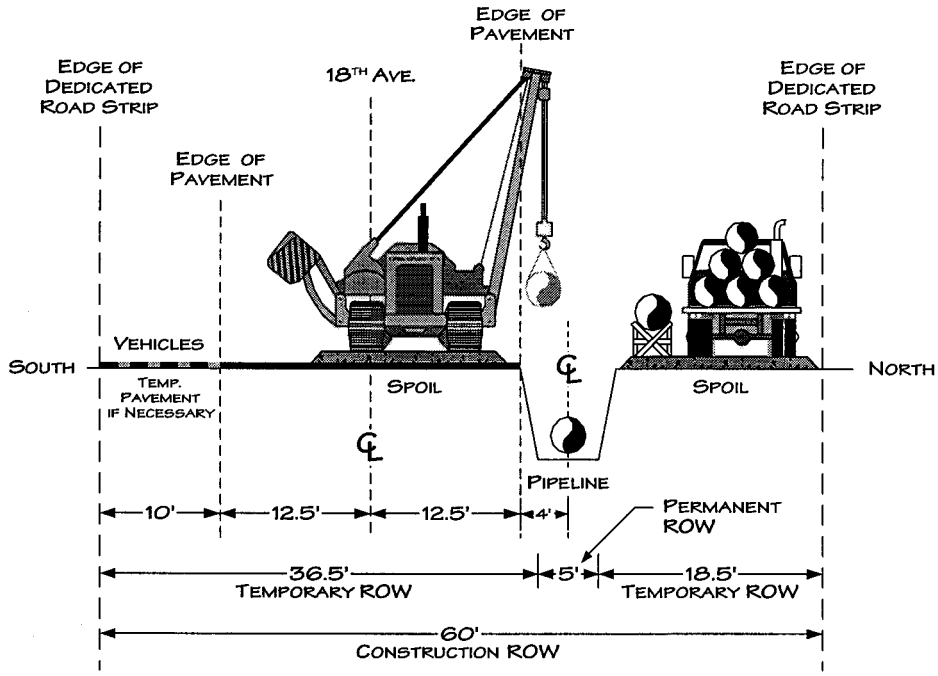

Typical Workspace Requirements for 18th Avenue
Looking West
MPs 2.9 to 10.4

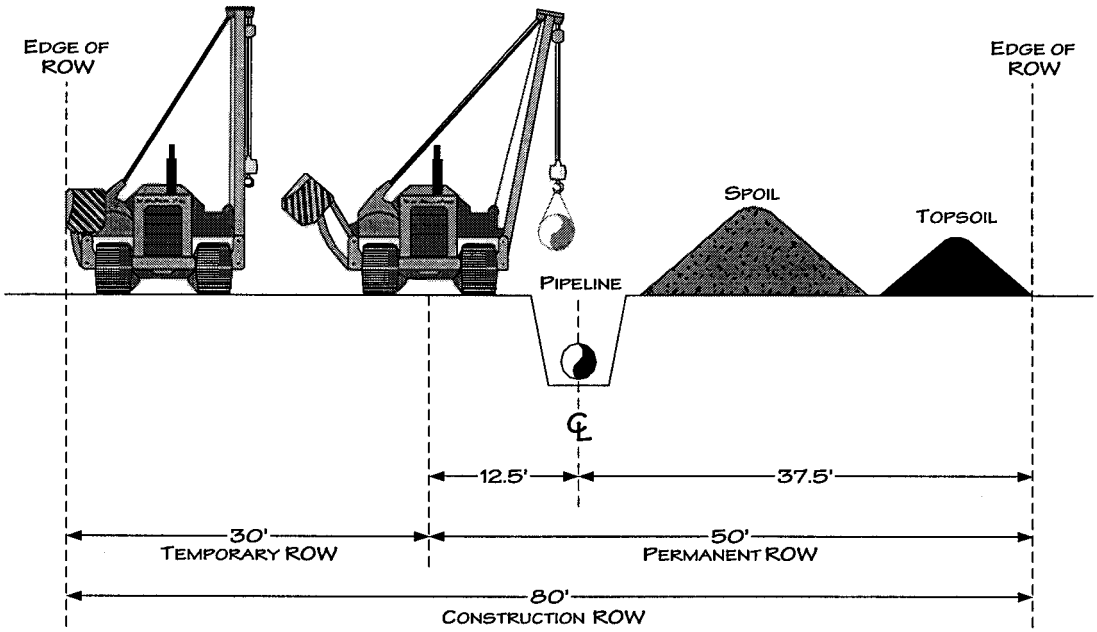

Typical Workspace Requirements
Cross Country Type I
Looking West or South
MPs 11.7 to 22.4

NOTE:
CONFIGURATION DOES NOT INCLUDE TEMPORARY EXTRA WORKSPACE AT CROSSINGS

For environmental review purposes only.
K:\748\200003\28\OW01.VSD

Figure 2.2.1-1
North Baja Pipeline Project
Typical Right-of-Way Cross Sections

Sheet 2 of 2

2.2.2 Aboveground Facilities

The Ehrenberg Compressor Station, Ehrenberg Meter Station, a pig launcher, and a MLV would require 12.4 acres of land within an approximate 80-acre site that has been acquired by NBP. The Rannells Trap pig launcher/receiver facility and a MLV would require a 0.3-acre site that would be leased/acquired from a private landowner. The Ogilby Meter Station, a pig receiver, and a MLV would require a 0.9-acre site that would be leased from the BLM.

Four other MLVs, each requiring an area approximately 50 feet by 50 feet located entirely within the permanent pipeline right-of-way, would be spaced as required along the pipeline route. Additional description of MLVs is presented in sections 4.8.1 and 5.8.6.2.

2.3 CONSTRUCTION PROCEDURES

The pipeline facilities would be designed, constructed, and operated in accordance with all applicable requirements included in the U.S. Department of Transportation (DOT) regulations in Title 49 CFR Part 192, *Transportation of Natural and Other Gas by Pipeline: Minimum Federal Safety Standards*; and other applicable Federal and state regulations. These regulations are intended to ensure adequate protection for the public and to prevent natural gas pipeline accidents and failures. Among other design standards, Part 192 specifies pipeline material and qualification, minimum design requirements, and protection from internal, external, and atmospheric corrosion.

In addition, NBP would implement a Construction Mitigation and Restoration Plan (CM&R Plan) that includes the portions of the FERC's Upland Erosion Control, Revegetation, and Maintenance Plan (FERC Plan) and Wetland and Waterbody Construction and Mitigation Procedures (FERC Procedures) that are relevant to the project area. The FERC Plan and Procedures are a set of construction and mitigation measures that were developed in collaboration with other Federal and state agencies and the natural gas pipeline industry to minimize the potential environmental impact of the construction of pipeline projects in general. It is our position that proper implementation of the FERC Plan and Procedures would adequately minimize construction-related impacts on soil, waterbodies, and wetlands. NBP's CM&R Plan also includes project-specific restoration measures prepared in consultation with the BLM and the CDFG to address the special issues associated with restoration in an arid environment, and a Horizontal Directional Drill Plan that outlines the procedures that would be followed to minimize the potential for an inadvertent release of drilling mud and to cleanup the mud should a release occur. We have determined that NBP's CM&R Plan would provide a level of environmental protection that is equal to or greater than the measures contained in the FERC Plan and Procedures. NBP's CM&R Plan is in appendix D and discussed in more detail in sections 5.2.1, 5.3.2.1, and 5.4.1.

NBP has also developed a Spill Prevention, Containment, and Control Plan for Hazardous Materials and Wastes (SPCC Plan). The SPCC Plan describes spill prevention practices, procedures for emergency preparedness and incident response, and training requirements. Details of NBP's SPCC Plan are provided in section 5.3.1.1.

2.3.1 General Pipeline Construction Procedures

This section describes the general procedures proposed by NBP for the construction of the pipeline and aboveground facilities. Refer to sections 5.0, 6.0, and 7.0 for more detailed discussions of proposed construction and restoration procedures as well as additional measures that we are recommending to mitigate environmental impact.

Figure 2.3.1-1 shows the typical steps of cross-country pipeline construction. NBP would use one general construction crew or "spread" to build its pipeline, a specialized "mini-spread" assigned to the 18th Avenue work, and a separate crew to construct the Ehrenberg Compressor Station.

Standard pipeline construction proceeds in the manner of an outdoor assembly line composed of specific activities that make up the linear construction sequence. These operations collectively include survey and staking of the right-of-way, clearing and grading, trenching, pipe stringing, bending, welding, lowering-in, backfilling, hydrostatic testing, and cleanup. In addition to standard pipeline construction methods, NBP would use special construction techniques where warranted by site-specific conditions. These special techniques would be used when constructing across paved roads, highways, railroads, waterbodies, wetlands, and residential areas, and when blasting through rock (see section 2.3.2).

Survey and Staking

Before the start of construction, NBP would complete land or easement acquisition, finalize civil surveys to locate the centerline and construction workspace, and survey and stake the construction work area. Existing utility lines and other sensitive resources would be located and marked to prevent accidental damage during pipeline construction.

Clearing and Grading

The construction work area would be cleared and graded (where necessary) to provide a relatively level surface for trench excavating equipment and a sufficiently wide workspace for the passage of heavy construction equipment. Except along certain washes where dense stands of small trees cannot be avoided, NBP does not anticipate the need to clear trees. In areas where grading is not required, vegetation would be cut off at ground level (leaving the root systems intact) and cleared to the edge of the work area for subsequent respreading during cleanup and restoration. Where grading is required and no bedrock is at the surface, approximately 2 to 8 inches of soil across the entire width of the graded work area would be stockpiled for restoration purposes. In agricultural areas, 1 to 2 feet of topsoil would be stripped and stockpiled separately from the trench spoil.

Trenching

The trench would be excavated to a depth sufficient to provide the minimum cover required by DOT specifications. Typically, the trench would be about 6 feet deep (to allow for about 3 feet of cover) and about 4 to 6 feet wide in stable soils and rock. In sandy soils, the trench could be up to 12 feet wide at the top. In agricultural areas, the depth of cover over the pipeline would be increased so that the top of the pipe would be 1 foot below expected deep tilling practices. NBP would also install the pipeline deep enough to maintain at least 1 foot of clearance when crossing beneath existing utilities or irrigation and drainage systems. Spoil from the trench would be spread on the working side of the right-of-way and worked over by equipment or temporarily stored in a pile next to the trench.

In areas where mechanical equipment cannot break up and loosen the bedrock, blasting may be required (see section 2.3.2).

Generally, excavated rock would be used to backfill the trench to the top of the existing bedrock profile. Large rock not suitable for use as backfill material would be either scattered across the work area with the landowner's permission or hauled off the right-of-way and disposed of in an area approved by the appropriate agency.

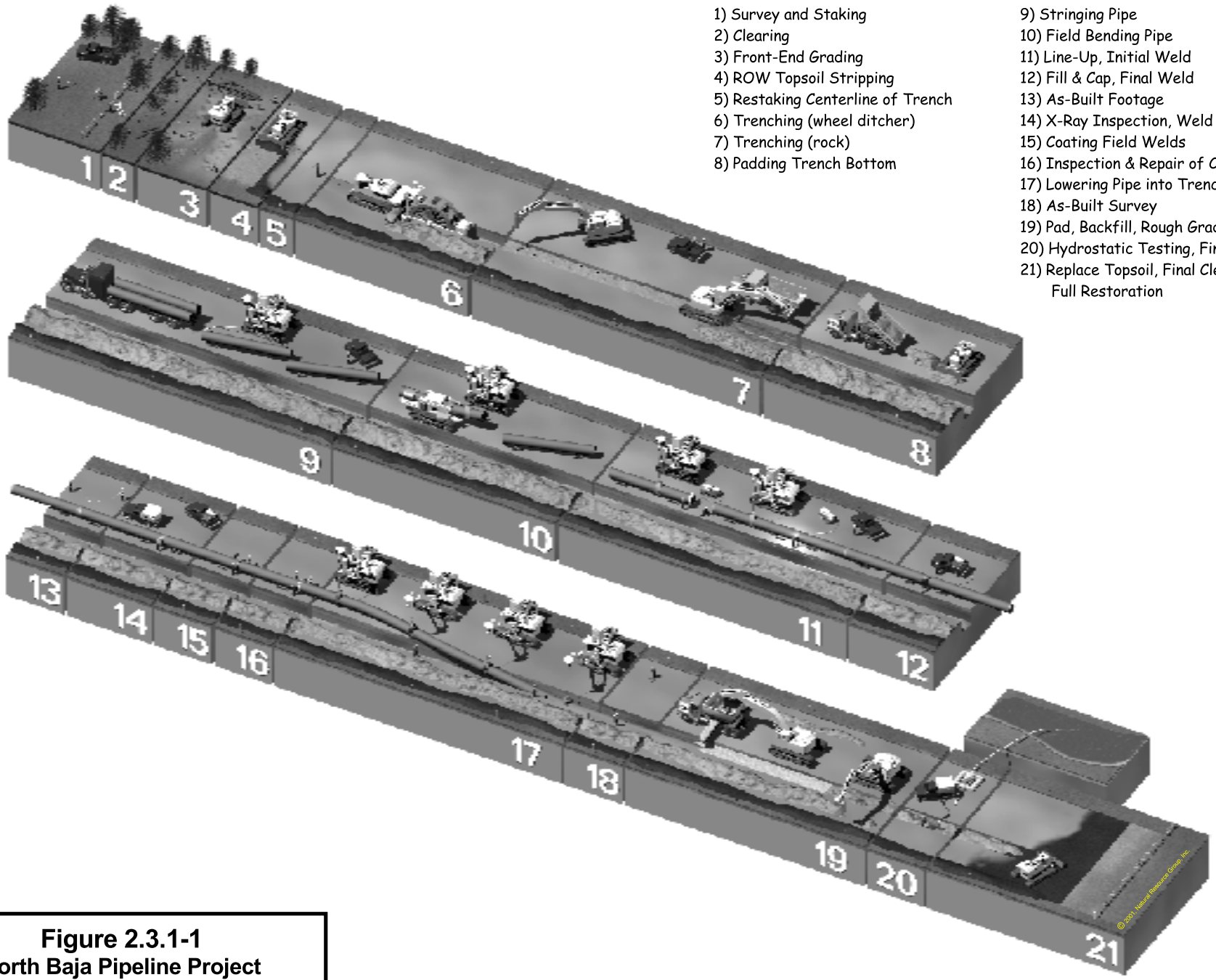

Figure 2.3.1-1
North Baja Pipeline Project
Typical Pipeline Construction Sequence

Pipe Stringing, Bending, and Welding

After trenching, the externally coated pipe would be strung along the right-of-way. Individual sections of pipe would be bent where necessary to fit the contours of the trench, aligned, welded together into long strings, and placed on temporary supports along the edge of the trench. All welds would be x-rayed to ensure structural integrity and compliance with the applicable DOT regulations. Those welds that do not meet established specifications would be repaired or removed. Once the welds are approved, the welded joints would be coated with a protective coating and the entire pipeline would be visually inspected for any faults, scratches, or other coating defects. Any damage would be repaired before the pipeline is lowered in.

Lowering-in and Backfilling

Before the pipeline is lowered in, the trench would be dewatered as necessary in accordance with applicable permits and cleaned of debris. In areas of rock, padding material such as sand, sandbags, or screened soil would be placed in the bottom of the trench. The pipeline would be lowered into the trench, and trench breakers would be installed at specified intervals to prevent water movement along the pipeline. The trench would then be backfilled using the excavated materials. If the excavated material is rocky, the pipeline would be protected with a rock shield to prevent damage to the pipe and pipe coating and/or covered with more suitable fill obtained either from commercial borrow areas or by separating suitable material from the existing trench spoil. No topsoil would be used as padding material.

Hydrostatic Testing

The pipeline would be hydrostatically tested in sections according to applicable permits and DOT specifications (Title 49 CFR Part 192) with water obtained from the Colorado River. No chemicals would be added to the test water. Test water would be pumped into the first test section beginning at MP 0.0, pressurized to design test pressure, and maintained at that pressure for about 8 hours. If leaks are found, the leaks would be repaired, and the section of pipe would be retested until specifications are met. After testing, the water would be pumped into the next test section until the entire pipeline is tested. The hydrostatic test water would be discharged at the end of the system into the All American Canal. Energy dissipation devices would be employed as necessary to minimize channel erosion. Additional discussion of hydrostatic testing is provided in section 5.3.2.3; applicable permits are listed in table 1.7-1.

Cleanup

Within 10 days of backfilling the trench, all work areas would be final graded and restored to pre-construction contours as closely as possible. To minimize future settling, the trench would be compacted with tracked construction equipment. Surplus construction material and debris would be removed and disposed of at sites approved by the appropriate agency. Slopes, such as those found in the foothills of the Palo Verde Mountains, would be reestablished, but in some areas may not match nearby natural contours because of rock and the difficulty in restoring the unique combination of slope and incised canyon-like washes. If blasting is required, NBP would treat the scars created by the blasting activity with Permeon (or equivalent) (see section 2.3.2).

Access roads would be regraded and restored in a manner similar to the pipeline right-of-way, unless the property owner requests otherwise.

After completion of construction and hydrostatic testing, the pipeline would be cleaned and dried using internal inspection tools (pigs) that are propelled through the pipeline. Once cleaned, dried, and purged

of air, the pipeline would be packed with natural gas. Pipeline markers and/or warning signs would be installed along the pipeline centerline at specified intervals to identify the location of the pipe.

2.3.2 Special Construction Techniques

Construction across paved roads, highways, railroads, waterbodies, wetlands, and residential areas, and blasting through rock may require special construction techniques. These are described in general below and in more detail in sections 5.0 and 6.0. Applicable permits are listed in table 1.7-1.

Road, Highway, and Railroad Crossings

Construction across paved and unpaved roads, highways, and railroads would be in accordance with requirements of applicable road and railroad crossing permits and approvals. Railroads, highways, and most other paved roads generally would be crossed by boring underneath the road or railroad. Boring requires the excavation of pits on both sides of the feature to be crossed to the depth of the pipeline, the installation of boring equipment, and the boring of a hole under the road equal to the diameter of the pipe. The pipe section would then be pushed through the borehole. Pipeline casings would not be used unless required by the permitting authority. For long crossings, additional pipe sections may be required. These additional sections usually would be welded to the first section of pipe in the bore pit before being pushed through the borehole. There would be little or no disruption to traffic at road or railroad crossings that are bored. Other roads and driveways may be open cut. NBP would take measures at open-cut crossings to ensure safety and minimize traffic disruptions.

Waterbody and Wetland Crossings

The Colorado River (MP 0.2) and the All American Canal (MP 79.8) would be crossed using the horizontal directional drill construction technique. This technique involves drilling a pilot hole under the waterbody and banks, then enlarging that hole through successive reamings until the hole is large enough to accommodate the pipe. Pipe sections long enough to span the entire crossing would be staged and welded along the construction work area and then pulled through the drilled hole. Directional drilling at each location is anticipated to take 4 to 6 weeks. Figure 2.3.2-1 shows a conceptual directional drill waterbody crossing.

A total of 30 other canals and drains would be crossed; all between MPs 0.2 and 11.8. The larger canals and drains, maintained by the Palo Verde Irrigation District (PVID), are typically 35 feet wide and 25 feet deep. All but one of these canals and drains cross 18th Avenue through culverts that are designed to be 1 foot below future winter water elevation. The pipeline would be bored under these culverts using techniques similar to road bores described above (see figure 2.3.2-2) or installed between the drain culverts and the road. Rannells Drain does not cross 18th Avenue and is the only drain or canal that would be crossed using a conventional open-cut crossing method (see figure 2.3.2-3). In accordance with NBP's CM&R Plan, actual in-stream trenching within this waterbody would be completed within 48 hours.

The North Baja Pipeline Project would also cross 579 dry washes. NBP proposes to use conventional cross-country construction techniques for these crossings.

The proposed pipeline would cross eight jurisdictional wetlands, four of which would be left undisturbed by the proposed directional drills. NBP would open cut the remaining four wetlands implementing the construction and restoration procedures as outlined in its CM&R Plan.

Refer to sections 4.3, 4.4, 5.3, and 5.4 for additional discussion of waterbodies and wetlands crossed by the proposed project.

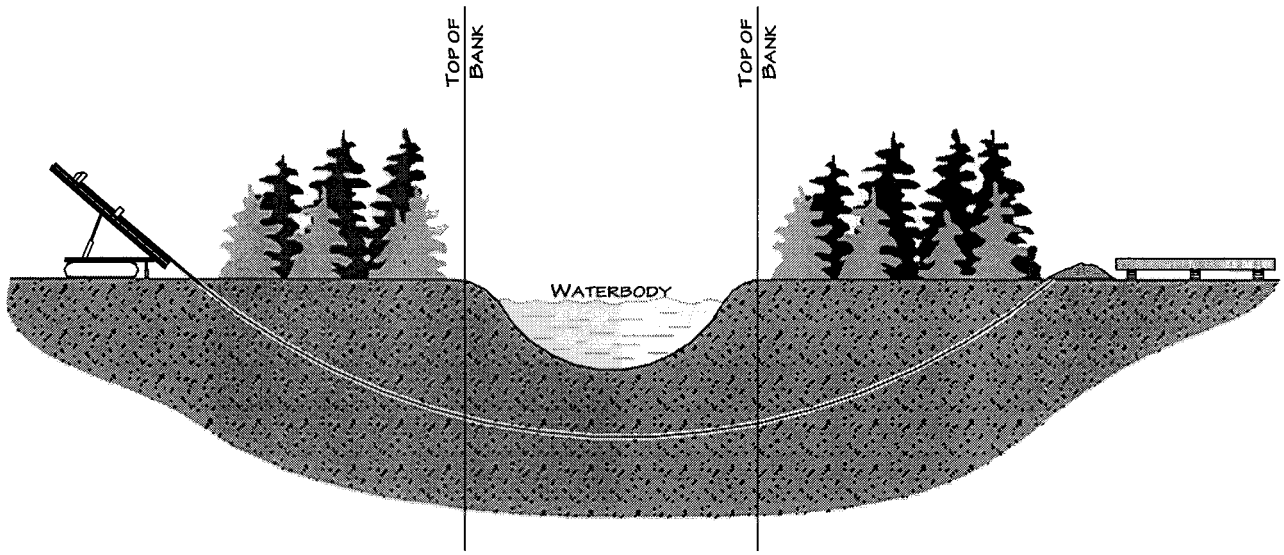

For environmental review purposes only.
K:\748\2000032\280\ROW01.VSD

Figure 2.3.2-1
North Baja Pipeline Project
Conceptual Directional Drill
Waterbody Crossing

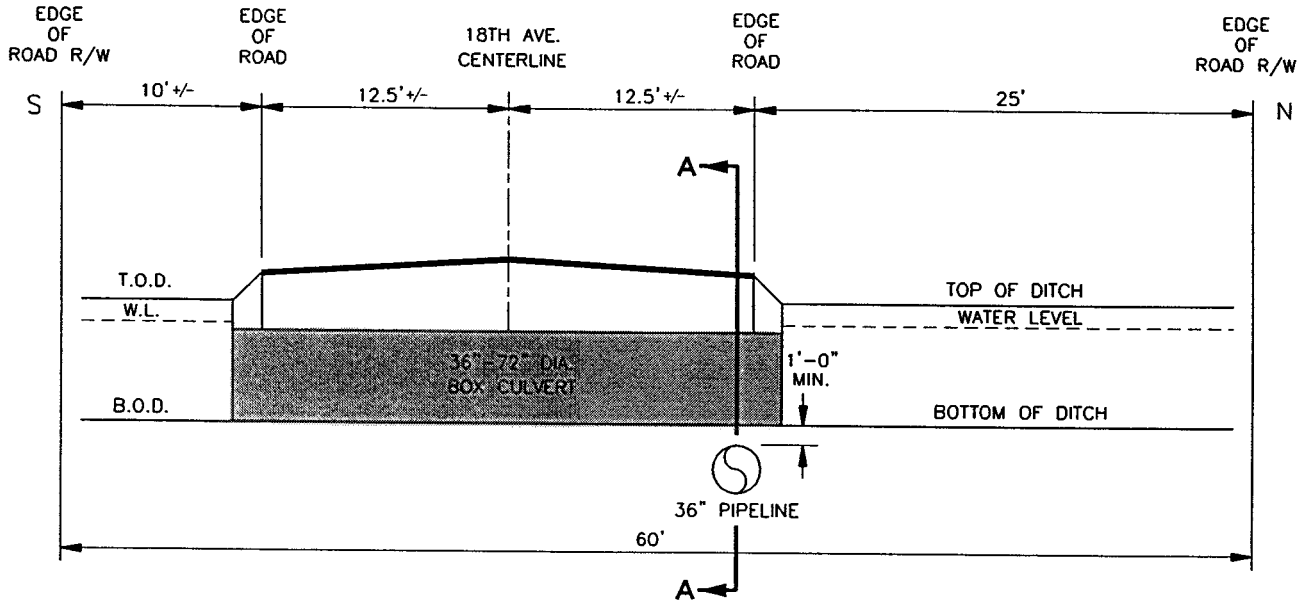

LOOKING WEST
N.T.S.

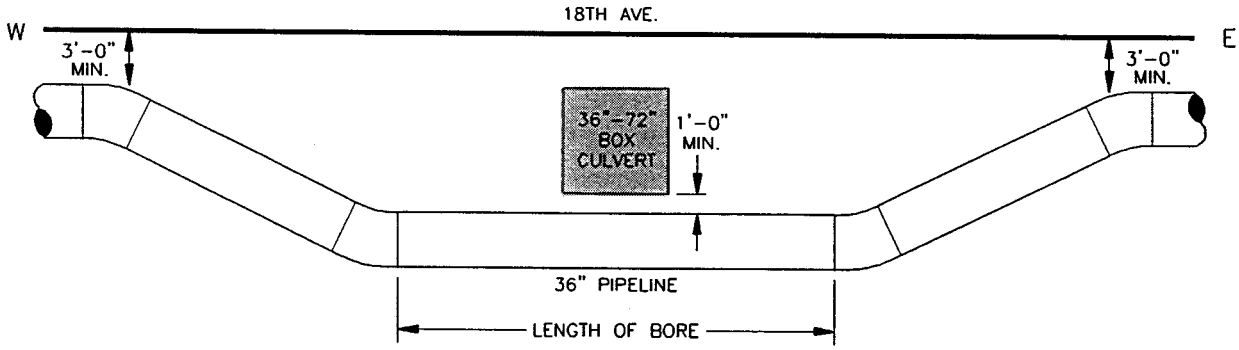

SECTION A-A
N.T.S.

REFERENCE DRAWING NO.
NBA-G00-012

REV:	DESCRIPTION	DATE	DRN	CHK	APPR
1	Remove Logo add Section Labels	03/19/01	PAD		

DRN BY: DRM | DATE 10/05/00 | APPR BY: | DATE

FIGURE 2.3.2-2

Typical Bored Canal/Ditch Crossing for 18th Avenue

North Baja Pipeline, LLC
North Baja Pipeline Project
Facility Locations

FIGURE NO.: 2.3.2-2 | REV. NO.:

D:\paduca\pr1\dms05919\fig2322.dgn
03/21/01

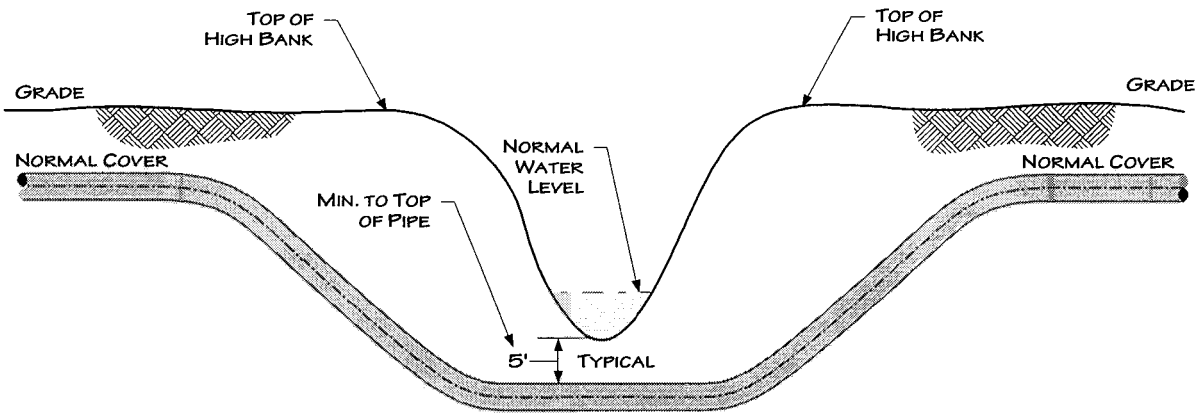

NOTES

1. DEPTH TO BE A MINIMUM OF 5'-0" AS SPECIFIED IN THE CONTRACT DOCUMENTS OR AS DIRECTED BY COMPANY.
2. PIPE SHALL BE LEVEL UNDER DRAIN CHANNEL AT DEPTH SHOWN EXCEPT WHERE NOTED OTHERWISE.
3. CONCRETE COATING, BOLT-ON CONCRETE WEIGHTS, SET-ON CONCRETE WEIGHTS OR ANCHORS WILL BE INSTALLED AS SPECIFIED IN THE CONTRACT DOCUMENTS OR AS DIRECTED BY COMPANY.

For environmental review purposes only.
K:\748\2000032\280\OPCUT.VSD

Figure 2.3.2-3
North Baja Pipeline Project
Typical Open-Cut Drain Crossing

Residential Areas

The only residences and businesses identified adjacent to NBP's pipeline route are along 18th Avenue in Riverside County, California. Within this area, there are 25 nearby residences and businesses, including 18 residences and 2 businesses located within 100 feet of the construction work area. The two businesses and four of the residences would be located within 50 feet of the construction work area. To more effectively present the issues associated with the installation of the pipeline along 18th Avenue, NBP has broken down the route in this area into nine segments as described below. Maps corresponding to these nine segments are provided in appendix E. NBP has also developed site-specific residential construction mitigation plans that detail the specific measures that would be used for construction near the 25 businesses and residences along 18th Avenue. The plans are discussed in detail in section 5.8.2.2 and provided in appendix E.

Segment 1 (MPs 2.92 to 3.42) - Segment 1 begins at MP 2.92 and includes the first canal crossing (D-10-Siphon-48) associated with the installation of the pipeline along 18th Avenue. NBP proposes to bore the canal from the east using conventional boring equipment. There is a residence located in close proximity to the bore exit pit of this canal crossing. Due to the close proximity, NBP would relocate the resident(s) during the boring operations, which would last an estimated 4 days. Spoil material from the bore exit pit would be stockpiled east of the canal, along the right-of way, or hauled away and stored offsite.

Beginning at the bore exit pit of this canal crossing, the pipeline centerline would be 12.5 feet north of the 18th Avenue pavement centerline. A small earthen drainage ditch that parallels the north side of 18th Avenue from approximately MPs 2.94 to 3.14 is located immediately west of the bore exit pit. The ditch has encroached on the road easement. Prior to construction, NBP would relocate the ditch further to the north in order to maintain the landowner's gravity flow irrigation system. Another earthen ditch that runs parallel to the south side of the road in this same area would require that the eastbound lane serve as the emergency ingress and egress for residents during the construction process. The stove-pipe construction method would be used in order to keep the eastbound lane open for restricted traffic flow during pipeline installation. This method would allow for the pipe to be welded in the trench one joint at a time and sequentially backfilled following coating operations. The stove-pipe construction method would keep the amount of open trench to a minimum but would also reduce the overall construction rate along 18th Avenue.

The next crossing within this segment is the East Side Drain. NBP has indicated that the depth of this drain would allow for an open cut in the road corridor and the installation of the pipeline across the top of the culvert while maintaining the required 5 feet of clearance. Between MPs 3.19 to 3.40, the shoulder along the southern edge of 18th Avenue is not wide enough to be used for access by area residents. Additionally, there is a drainage ditch paralleling the 18th Avenue road shoulder along the north side and a residence located on the south side of 18th Avenue near MP 3.30. As a result, NBP would keep the eastbound lane open for restricted traffic flow and use the stove-pipe construction method for pipe installation. At MP 3.40 NBP proposes to open cut Intake Boulevard and install the pipeline across the top of Goodman Drain.

Segment 2 (MPs 3.43 to 4.00) - Segment 2 begins at the exit pit of the Goodman Drain crossing. The pipeline centerline for this segment would be 12.5 feet north of the pavement centerline of 18th Avenue. From MPs 3.45 to 3.62, NBP has indicated that the south shoulder of 18th Avenue would be wide enough to be used by area residents for access. As a result, NBP proposes to weld the entire 875 feet of pipe and lower it into the trench in one section. If, however, during excavation NBP encounters a soil type that cannot be distributed across the road surface and worked on top of by heavy equipment, the material would have to be stockpiled separately. The stockpiling of this material would use a substantial amount of NBP's workspace and would require the use of the stove-pipe construction method.

The next crossing is the D-Siphon-89 Canal. NBP proposes to bore this canal from the east side using conventional boring equipment. The spoil material associated with both the exit and entrance pits for this crossing would be stockpiled onsite on the respective sides. Access to two residences located on the west side of the canal crossing and south of 18th Avenue would be maintained by using the PVID canal roads that adjoin the two properties.

From the exit pit of the canal to approximately MP 3.92, NBP has indicated that the road shoulder along the south side of 18th Avenue would be wide enough to allow restricted traffic flow. As a result, NBP proposes to lower this section into the trench in one section contingent on the subsoil conditions encountered. Access would be maintained to the five residences located north of 18th Avenue along this portion of the route.

The approach to a private canal crossing begins at MP 3.92. NBP proposes to cross this canal by excavating each side of the canal deep enough to maintain 2 feet of canal structure clearance. Any temporary support required for the canal would be accomplished by chaining off the canal conduit to a temporary support beam that would be placed at grade level. The spoil material would be stockpiled onsite. Access would be maintained to the one residence located in this area on the south side 18th Avenue.

Between MPs 3.95 and 4.00 there is an earthen drainage ditch paralleling the south side of 18th Avenue. The presence of the ditch does not allow for the road shoulder to be used for restricted access. NBP proposes to use the eastbound lane to maintain access through this area, which would limit the amount of workspace available for pipeline installation. NBP proposes to use the stove-pipe construction method to keep access restrictions to a minimum.

Segment 3 (MPs 4.01 to 5.00) - The pipeline centerline for this segment would be 12.5 feet north of the pavement centerline of 18th Avenue. If soil conditions permit, NBP proposes to weld the entire segment of pipe between MPs 4.01 and 4.23 (approximately 1,200 feet) and lower it into the trench in one section. The shoulder along the southern edge of 18th Avenue would be used by area residents for access. Access would be maintained to the one residence located on the south side of 18th Avenue in this area.

Further west between MPs 4.23 and 4.41, NBP proposes to use the stove-pipe construction method. This construction method is proposed to minimize impact on a business located on the north side of 18th Avenue and a canal that runs parallel to the south side of 18th Avenue. The use of this method would result in smaller areas of open trench, which would allow for better access management and less trench spoil stockpiled at any given time.

The approach to the D-19 Canal and C&D Boulevard crossing begins at MP 4.41. Due to the close proximity of the canal to the road, NBP proposes to bore both features together using conventional boring equipment. The entrance pit for the crossing would be on the east side of the canal. Two utilities located on the west side of the boulevard would require relocation because they would be located within the boundaries of the exit pit. The residence on the west side of the crossing would be located within close proximity to the exit pit. NBP would coordinate with the residents to maintain access during the road crossing activities.

From the exit pit of the C&D Boulevard crossing, NBP would use the stove-pipe construction method for the next approximately 1,250 feet. This method would be used because two canals parallel 18th Avenue to the south and do not allow for a wide enough road shoulder to be used for ingress or egress. NBP has indicated that the presence of the canals would necessitate the need to use the eastbound lane of 18th Avenue for restricted access. NBP would maintain access to the residence located on the north side of 18th Avenue in this area.

NBP proposes to cross the D-19-4N canal by excavating each side of the canal deep enough to maintain the required 2 feet of clearance from the canal structure. Any temporary support required for the canal would be accomplished by chaining off the canal conduit to a temporary support beam that would be placed at grade level.

A canal parallels the south side of 18th Avenue from the west side of the D-19-4N Canal to the South Broadway Road approach limiting the amount of shoulder on this side of the road. As a result, NBP proposes to use the stove-pipe construction method in this area.

NBP proposes to open-cut the South Broadway Road crossing. A residence is located west of the road crossing. As a result, NBP proposes to use the stove-pipe construction method for 400 feet past the road crossing and would coordinate restricted access with the occupants of the residence. In addition, spoil material may need to be hauled away and stockpiled offsite in order to maintain ingress and egress for the residents.

Segment 4 (MPs 5.01 to 6.00) - The pipeline centerline for this segment would be 12.5 feet north of the pavement centerline of 18th Avenue. Soil conditions permitting, NBP proposes to weld and install the first 500 feet of this segment in one section. Further west, NBP proposes to open cut the road corridor and install the pipeline across the top of Lovekin Drain due to the substantial depth of this drain. NBP would maintain the required 36 inches of cover from the road surface and 5 feet of clearance from the top of the drain conduit.

For the next approximately 1,000 feet, NBP proposes to install the pipeline in one section if feasible. The west end of this section constitutes the approach to the Arizona/California Railroad crossing. The crossing would be bored from the east with the spoil material from the entrance pit stored on the east side and along the right-of-way back toward Lovekin Drain. There is a business located just before the railroad crossing and NBP would coordinate with the owner to maintain access to the facility during construction through this area.

After crossing the railroad there is a private canal that parallels the east side of Lovekin Boulevard. Due to the proximity of this canal to the boulevard, NBP proposes to cross both the boulevard and the canal with one bore. The bore would be completed from the west side of the boulevard to the east side of the private canal and would use the same exit pit as the railroad crossing. A tie-in would then be performed at that location to bring the two crossing sections together.

The 1,250 feet west of Lovekin Boulevard would be installed 12.5 feet from the centerline of the pavement and north of the proposed 18th Avenue Contractor Yard. NBP has indicated that it may elect to install this portion of the pipeline last in order to maintain full access to the yard during all other 18th Avenue segment installations. NBP proposes to weld this portion of the segment in two sections for installation into the trench. Two separate sections would be required due to the MLV located at MP 5.7. The MLV would be installed on the south side of 18th Avenue, which would require the pipeline to cross both lanes of the road twice.

NBP proposes to install the next 1,400 feet of pipeline in one section. Access would be maintained to the residence located along the south side of 18th Avenue at MP 5.7.

The next canal crossing, C-Siphon-56, would be bored from the east using conventional boring techniques. The proposed temporary extra workspaces at this crossing would allow for the storage of spoil

materials onsite for both the bore entrance and exit pits. From the west side of the C-Siphon-56 Canal to about MP 6.0, the pipeline would be installed into the trench in one section if soil conditions permit.

Segment 5 (MPs 6.01 to 7.00) - The pipeline centerline for this segment is 12.5 feet north of the pavement centerline of 18th Avenue. NBP proposes to install the first 300 feet of this segment in one section. NBP then proposes to use the stove-pipe construction method for approximately 200 feet due to the location of a residence on the north side of 18th Avenue and a narrow road shoulder on the south side of the road in this area. The next 1,250 feet would be installed in one section if soil conditions permit.

To minimize impact on a residence and the associated fencing and landscaping at MP 6.38, NBP proposes to use the stove-pipe construction method for approximately 300 feet in this area. This method would limit the amount of trench open and the amount of spoil stockpiled at any one time and maintain access to the residence. NBP proposes to open cut De Frain Boulevard and store spoil material on the west side of the road crossing due to the proximity of this residence. NBP proposes to install the next 750 feet in one section if soil conditions permit. The shoulder of 18th Avenue would be used for restricted access.

The next crossing within this segment is the crossing of Central Drain. NBP proposes to open cut the road corridor and install the pipeline across the top of the drain culvert. Temporary extra workspace would be used on either side of the drain for the storage and stockpiling of spoil materials from this crossing. NBP proposes to install the next approximately 210 feet of this segment in one section if soil conditions permit.

Segment 6 (MPs 7.01 to 8.00) - The pipeline centerline for this segment is 12.5 feet north of the pavement centerline of 18th Avenue. If possible, NBP proposes to install the first 2,340 feet of this segment in one long section. However, a significant number of additional pipe-laying tractors would be needed to install this amount of pipe in one section and NBP has indicated that it may elect to break the footage up into two sections and complete a tie-in in the middle. Both of these options would be dependent on the condition of the spoil material encountered and whether it could be spread and worked on top of by heavy equipment. The road shoulder along 18th Avenue would provide for restricted flow of traffic for ingress and egress in this area.

NBP proposes to open cut the crossing of Arrowhead Boulevard within this segment. Spoil material would be stored on either side of the crossing.

NBP proposes to install the next 1,000 feet of pipeline in one section if possible. At the end of this 1,000-foot-long section is a residence on the south side of 18th Avenue that would require the stove-pipe construction method for about 250 feet. Starting from the western property edge of this residence and continuing for about 1,000 feet the pipeline would be installed in one section if soil conditions permit.

The stove-pipe construction method would be used to construct past the next residence at approximately MP 7.91 and minimize impact on the landowner's fence and landscaping. This method would result in less open trench, less spoil material stockpiled, and a better ability to maintain residential access. Any excess spoil material would be stockpiled on the temporary extra workspace located south of 18th Avenue in this area. Just west of this residence is the crossing of the C-05 Canal. NBP proposes to bore this crossing using conventional boring equipment. The bore entrance pit would be located on the west side of the crossing, which would leave the smaller bore exit pit on the residential side of the crossing. Any excess spoil material would be stockpiled on the temporary extra workspace located south of 18th Avenue in this area.

The remaining 500 feet of this segment would be installed in one section if soil conditions permit. The road shoulder is not wide enough to support restricted access in this area; therefore, if poor spoil conditions are encountered and the spoil has to be stockpiled parallel to the trench, NBP proposes to use the stove-pipe construction method.

Segment 7 (MPs 8.01 to 9.00) - The pipeline centerline for this segment is 12.5 feet north of the pavement centerline of 18th Avenue. There is a narrow strip of road shoulder to the south of 18th Avenue and a concrete canal paralleling the road to the north in the first 500 feet of this segment. Due to the lack of workspace, NBP does not anticipate that this segment could be installed in one section even though there are no residences within this area.

At approximately MP 8.10, the pipeline centerline would shift further to the south to a point 6 feet north of the pavement centerline of 18th Avenue. The centerline shift is needed to facilitate the crossing of a private canal and would reduce the construction impact on the residence abutting the canal to the west. NBP proposes to cross the canal by excavating each side of the canal deep enough to maintain the required 2 feet of clearance from the canal structure. Any temporary support required for the canal would be accomplished by chaining off the canal conduit to a temporary support beam that would be placed at grade level.

NBP proposes to use the stove-pipe construction method for approximately 250 feet in the area of the residence located to the west of the private canal. The use of the stove-pipe construction method would allow for access to be maintained to the residence. In addition, spoil material from the west side of the canal crossing would be hauled away and stockpiled further west down the right-of-way or stored offsite to minimize impact on the residence. The pipeline centerline would continue to be located 6 feet north of the pavement centerline of 18th Avenue from the western edge of the residence to near MP 8.35 to minimize the impact of construction on some large palm trees that parallel the north side of 18th Avenue in this area.

At MP 8.35 the pipeline centerline would return to a point 12.5 feet north of the pavement centerline of 18th Avenue. From this point to the SR 78 right-of-way there is about 500 feet that NBP has indicated could be installed in one section due to the lack of residences in the area but the southern shoulder along 18th Avenue is narrow and poor subsurface conditions are expected. Therefore, NBP has indicated that the use of the stove-pipe construction method would likely be needed. The SR 78 crossing itself would be bored using conventional boring equipment. Spoil material from the crossing would be stockpiled onsite using the proposed temporary extra workspaces on either side of the road.

From the west side of the highway crossing, NBP has indicated that the next 2,500 feet of this segment could be installed in one section if access to a residence at MP 8.66 could be maintained. According to NBP, to install this portion of the route in one section would require a significant number of additional pipe-laying tractors and NBP may elect to break the footage into two sections and complete a tie-in in the middle. Breaking this section into two would allow NBP to better manage ingress and egress for the landowner.

The next crossing within this segment is the West Side Drain. This is a deep drain and NBP proposes to open cut the road corridor and install the pipeline across the top of the drain culvert. Temporary extra workspace on either side of the drain would be used to stockpile spoil material generated from the crossing. West of the drain crossing, the remaining 500 feet would be installed in one section if subsurface conditions permit.

Segment 8 (MPs 9.01 to 10.00) - The pipeline centerline for this segment would be 12.5 feet north of the pavement centerline of 18th Avenue. NBP has indicated that the first approximately 900 feet of this segment may be installed in one section. There is a residence on the south side of 18th Avenue at MP 9.20 that would require access to be maintained. According to NBP, the narrow shoulder along the south side of 18th Avenue would not permit it to be used as a means of ingress and egress. NBP would keep access open to this residence by means of Stephenson Boulevard located west of the property. The portion of the pipeline directly in front of this property would be installed using the stove-pipe construction method, which would allow NBP to maintain access to the residence. According to NBP, the next 1,250 feet of this segment of the route could be installed in one section once access to the residence has been reestablished from SR 78.

Stephens Boulevard would be crossed in this segment at about MP 9.46. NBP has indicated that spoil material generated from the crossing would be stored on the east side of the crossing due to the close proximity of a canal on the west side of the crossing.

After crossing Stephenson Boulevard, the pipeline route then crosses the C-03 Canal. NBP proposes to bore the canal using conventional boring equipment. The larger entrance pit would be located on the west side of the canal due to the limited workspace on the east side of the crossing. Spoil would be stockpiled on either side of the canal. NBP does not anticipate the need to have the spoil hauled to an offsite storage location.

NBP has indicated that the portion of the pipeline route from the entrance pit on the west side of the canal crossing to approximately MP 9.96 could be installed in one section. The road shoulder along the southern edge of 18th Avenue is narrow due to a canal that runs parallel to it on the south side. This may require NBP to break the section up into several portions to assist in maintaining restricted access. However, if NBP encounters a soil type during excavation that cannot be distributed across the road surface and worked on top of by heavy equipment, the material would have to be stockpiled separately. The stockpiling of this material would take up a substantial amount of NBP's work area and would require the use of the stove-pipe construction method. In addition, in order to install this 2,300-foot-long portion of the route in one section would require a significant number of additional pipe-laying tractors so NBP may elect to break the footage up into several sections.

Near the end of this segment is the approach to a culvert crossing (C-03-64N) with a residential driveway located to the west. NBP proposes to cross the culvert by excavating each side of the culvert deep enough to maintain the required 2 feet of clearance and sliding a joint of pipe underneath. Any support required would be accomplished by chaining off the culvert to an I-beam or pipe joint that would run perpendicular to the pipeline and parallel to the canal. NBP has indicated that the presence of a residence on the west side of the culvert would require that spoil material for that side of the crossing be stockpiled to the south of 18th Avenue and a parallel canal or stored offsite. NBP proposes to use the stove-pipe construction method for approximately 250 feet in the area of the residence in order to maintain access.

Segment 9 (MPs 10.01 to 10.50) - The pipeline centerline for this segment would be 12.5 feet north of the pavement centerline of 18th Avenue. NBP has indicated that the first 2,100 feet of this segment could be installed in one section because the road shoulder to the south of 18th Avenue is wide enough to support restricted traffic, which would allow the use of the full roadway as construction work area. In addition, the two residences located near this section could be accessed by using Keim Boulevard located to the west of this portion of the route. The lowering in of this section at one time would be contingent on the type of subsurface conditions encountered. If poor spoil material is encountered that would be unable to support construction equipment traffic, NBP would use the stove-pipe construction method.

The western edge of this 2,100-foot-long section begins a culvert crossing (C-03-16-3N) located near MP 10.42. NBP proposes to cross the culvert by excavating each side of the culvert deep enough to maintain the required 2 feet of clearance and sliding a joint of pipe underneath. Any support the canal may require would be accomplished by chaining off the culvert to an I-beam or pipe joint that would run perpendicular to the pipeline and parallel to the canal. NBP has indicated that two concrete-lined canals that parallel 18th Avenue on both sides may require that spoil material from this crossing be stockpiled offsite.

NBP proposes to use the stove-pipe construction method from the west side of the culvert crossing to the approach of Keim Boulevard. According to NBP, this method is needed due to the presence of two canals that parallel each side of 18th Avenue and limit workspace.

Keim Boulevard and the C-03-16 Canal would be bored using conventional boring equipment. The crossing would be bored from the west side due to the additional workspace available for the entrance pit. A small earthen drainage ditch that parallels the workspace would be relocated in order to maintain the landowner's gravity flow irrigation system.

In addition to the measures discussed above, NBP would develop a traffic management plan for 18th Avenue in consultation with the County of Riverside Transportation Department. The plan would identify traffic control measures; traffic signage requirements; construction hours; vehicular, pedestrian, and emergency vehicle access provisions; nightly shut-down procedures; clearance distance between excavations and vehicular traffic; placement of safety fencing; and construction equipment storage. The traffic management plan is discussed in more detail in section 5.8.3.2.

Blasting

Blasting to excavate the pipeline trench is not anticipated to be widespread. However, the pipeline route would cross areas of exposed bedrock in the foothills of the Palo Verde Mountains between MPs 28.5 and 31.6. NBP may also have to install the pipeline in this area by spanning across areas of steep terrain rather than installing the pipe below ground. Blasting and/or an excavator with various hydraulic hammering attachments would likely be needed to remove rock from the trench in some locations within this milepost range. In the unlikely event that blasting is required near existing structures at other locations, pre- and post-blasting inspections would be conducted at all residential or commercial structures or utilities within 150 feet of blasting, with the landowner's approval. All blasting activities would be conducted only during daylight hours and in strict compliance with NBP's construction specification for blasting (PG&E Gas Transmission Corporation, 1999). This specification contains procedures for complying with applicable Federal, state, and local safety and environmental regulations, codes, and standards for the use, storage, and transport of explosives. NBP's compliance with these regulations would minimize blasting hazards. NBP would treat scars created by blasting with Permeon (or equivalent) and paint the pipeline to match the surrounding landscape at all aerial crossings.

2.3.3 Aboveground Facility Construction Procedures

Construction of the Ehrenberg Compressor Station would involve clearing and grading of the site for placement of the compressor units and associated buildings, piping, and structures. The building foundations would be excavated and foundations installed with pipe and conduit access ways. Prefabricated segments of pipe, valves, fittings, and flanges would be shop- or site-welded and assembled at the site.

The compressor units and other large equipment would be mounted on their respective foundations, and the compressor building and other ancillary buildings would be erected around them. Noise abatement

equipment (including a properly attenuated building enclosing the turbines, as well as exhaust stack silencers and air inlet silencers) would be installed to meet applicable Federal and local noise standards. The natural gas piping, both above and below ground, would be installed and pressure-tested using a method similar to that used for the main pipeline. The electrical wire would be pulled through pre-installed conduits, and the instrument panels and control systems would be installed and circuit checked. Following construction, construction debris would be removed and the site would be graded and leveled with 3 inches of gravel. Permanent fencing would be installed around the site and access roads and parking areas would be paved.

Construction of the Rannells Trap and Ogilby Meter Station would require minor site clearing and grading as necessary to establish appropriate contours for the facilities. Both areas would be fenced for security.

The MLVs would be installed at intervals specified in the DOT regulations and in areas easily accessible to operating personnel. Valve assemblies would be fenced to protect them from damage or vandalism.

2.4 CONSTRUCTION SCHEDULE

In its application to the FERC, NBP stated that the project is scheduled to be in-service September 2002 with construction scheduled to take place between April and September 2002. Subsequently, NBP requested approval to begin construction of the North Baja Pipeline Project by January 1, 2002 if all permits and approvals are in place. NBP states that a construction start on or before January 1, 2002 would:

- reduce impact on sensitive biological species;
- reduce the potential for the project to be delayed due to biological limited operating periods;
- reduce or eliminate gas curtailments currently occurring periodically on the SDG&E gas transmission system; and
- increase the amount of additional electric generation capability available in California.

The approximate duration of construction would be 6 months for the compressor station and 4 months for the pipeline.

2.5 ENVIRONMENTAL COMPLIANCE INSPECTION AND MITIGATION MONITORING

As the lead Federal agency for the project, the FERC would impose conditions on any Certificate granted for the project. One of these conditions requires NBP to adhere to the construction procedures and mitigation measures described in its application, including all supplemental filings and responses to data requests. The other conditions include the additional mitigation measures we develop during our analysis to minimize the environmental impact that would result from the construction of the project (see sections 5.0 and 7.0).

As the California state lead agency, the CSLC would adopt a mitigation monitoring program for the project pursuant to CEQA. While there would be some jurisdictional differences between the FERC's and the CSLC's requirements, the environmental inspection and mitigation monitoring program for the proposed North Baja Pipeline Project would fulfill both agencies' requirements. The program would also address requirements placed on the project by other Federal and state agencies.

Before construction begins, NBP would be required to submit a plan to the FERC that describes how NBP would implement the mitigation measures required by the FERC Certificate. The plan would identify:

- how NBP would incorporate mitigation requirements into the contract bid documents, construction contracts, and construction drawings so that the mitigation required at each site is clear to onsite construction and inspection personnel;

- the number of environmental inspectors (EIs) assigned per spread and a description of how NBP would ensure that sufficient personnel are available to implement the environmental mitigation; and

- the training and instructions NBP would give to all personnel involved with construction and restoration.

NBP states that it would assign at least two qualified EIs to each construction spread[4/] to monitor environmental compliance during construction. These EIs would be hired by NBP. The responsibilities of the EIs are outlined in part II., section III.B of NBP's CM&R Plan (see appendix D) and would include ensuring that the Certificate and environmental conditions attached to other permits or authorizations are met. The EIs would have the authority to stop activities that violate the environmental conditions or require other corrective action to achieve environmental compliance. In addition to monitoring compliance, the duties of the EIs would include training project personnel and reporting compliance status to the contractor(s) and NBP.

NBP would develop an environmental training program tailored to the North Baja Pipeline Project and its requirements. The program would be designed to ensure that:

- qualified environmental training personnel provide thorough and well-focused training sessions regarding the environmental requirements applicable to the trainees' activities;

- all individuals receive environmental training before they begin work on the right-of-way;

- adequate training records are kept; and

- refresher training is provided as needed to maintain high awareness of environmental requirements.

NBP would be required to certify that all company personnel, EIs, and contractor personnel would be informed of the EI's authority and have been or would be trained on the implementation of the environmental mitigation measures appropriate to their jobs before becoming involved with construction and restoration activities.

During the construction phase, NBP's EIs would inspect and monitor all construction and mitigation activities to ensure compliance with plans, permits, and conditions. NBP would be required to submit weekly status reports to us. These reports would include:

4/ NBP currently proposes to build the pipeline using one general construction spread, a specialized "mini-spread" would be assigned to the 18th Avenue work, and the compressor station would be constructed as a separate spread.

- a listing of all problems encountered and each instance of noncompliance observed by the EI(s) during the reporting period (both for the conditions imposed by the FERC and any environmental conditions/permit requirements imposed by other Federal, state, or local agencies);

- a description of any corrective actions implemented in response to all instances of noncompliance, and their cost and effectiveness;

- a description of any landowner/resident complaints that may relate to compliance with the requirements of the FERC Certificate, and the measures taken to satisfy their concerns; and

- copies of any correspondence received by NBP from other Federal, state or local permitting agencies concerning instances of noncompliance, and NBP's response.

Monitors from the CSLC and the FERC, as well as a separate environmental contractor under the direction of both agencies, would also conduct field inspections. Other Federal and state agencies would conduct oversight inspection and monitoring to the extent determined necessary by the individual agency. As examples, the BLM would monitor activities on its land and the CDFG would perform the primary biological monitoring for the project within California.

After construction, NBP would develop and implement a post-construction crop monitoring program for a period of at least 2 years following construction. During this 2-year period, NBP would submit quarterly reports to us that document any problems identified by NBP or landowners and describe the corrective actions taken to remedy those problems.

NBP would annually monitor areas of desert vegetation disturbed by construction for 5 years after construction is completed. Results of the monitoring would be provided in full annual reports to the BLM, the FERC, and the CSLC for the first, second, and fifth year after construction. Data from annual surveys would be presented to the BLM for the third and fourth years. The fifth-year report would provide an overall summary of the success of mainline restoration.

Additionally, NBP would conduct surveys for non-native plant species after construction is complete to determine locations of weed infestations attributable to the project. NBP would conduct these surveys and implement control measures (*e.g.*, herbicide application, pulling by hand) twice a year for 2 years after construction is complete. NBP would also implement weed control measures as part of routine maintenance and operation of the pipeline. NBP would include the results of its weed control program with the reports of its general desert vegetation monitoring.

After construction, we and other agencies would continue to conduct oversight inspection and monitoring to the extent determined necessary. If we determine that any of the proposed monitoring time frames are not adequate to assess the success of restoration, we would require NBP to extend its post-construction monitoring programs.

2.6 OPERATION, MAINTENANCE, AND SAFETY CONTROLS

NBP would operate and maintain the pipeline in accordance with all applicable Federal and state regulations. The pipeline system would be monitored and controlled 24 hours a day by a remote dispatch center located in Portland, Oregon. Four locally based, full-time staff would be assigned to operate and

maintain the pipeline system. NBP would also retain a locally based contractor to assist in routine maintenance services and respond to emergency situations.

The pipeline system would be routinely inspected by air or on the ground to observe right-of-way conditions and identify indications of leaks, evidence of pipeline damage, or damage to erosion controls resulting from erosion or washouts. All inspections would be done in accordance with DOT standards. Any erosion or unstable conditions would be repaired as necessary. The aboveground facilities would be inspected at intervals that meet or exceed DOT requirements. During these inspections, equipment would be tested, recalibrated, and repaired as needed. In addition, pigs would be run through the pipeline to check for wear and irregularities in the pipe.

NBP would install a cathodic protection system to prevent or minimize corrosion of the buried pipeline and aboveground facilities. NBP would design an impressed current system using deep-well anodes placed within the permanent right-of-way in areas where they would provide the required negative induced potential to resist external corrosion. Aboveground facilities would be painted with a suitable anti-corrosion coating. Although internal corrosion is not expected to be a factor, the pipe would be internally coated. The condition of the pipe coating and the effectiveness of the cathodic protection system would be monitored in accordance with Federal standards and regulations. Repairs to the pipe, the pipe coating, or the cathodic protection system would be made as appropriate.

Wherever the pipeline crosses fence lines, roadways, waterbodies, and other public access locations, pipeline markers would be placed to alert those contemplating working in the vicinity of the buried pipeline. The markers would identify NBP as the operator and display telephone numbers for emergencies or general inquiries.

Section 5.12 presents a detailed discussion of DOT safety regulations and requirements for natural gas pipelines and NBP's proposed plans and procedures for meeting or exceeding those requirements.

2.7 FUTURE PLANS AND ABANDONMENT

During the scoping process, several parties expressed interest in the project as a source of natural gas for existing facilities and future development of projects in the United States. NBP has not presented us with any plans to serve customers in southeastern California or southwestern Arizona, or to expand its system; however, a future tie-in or expansion of capacity is possible. While a majority of the project involves a 30-inch-diameter pipeline, NBP proposes to install a 36-inch-diameter pipeline across the Colorado River and Palo Verde Valley (MPs 0.0 to 11.7). This would allow future expansion of the system to occur without further construction in these areas. The proposed natural gas pipeline system, however, could not be expanded or converted to another use (*e.g.*, to a liquid pipeline) without application to and approval by the FERC.

NBP has not identified plans for abandonment of the facilities in the foreseeable future. If and when NBP abandons any of the proposed facilities, the abandonment would be subject to approval of the FERC under Section 7(b) of the NGA. The appropriate level of environmental review would be completed at the time of application for abandonment. Abandonment would be either "in place" or by removal.

The FERC typically allows a buried pipeline that has reached the end of its service life to be internally cleaned, purged free of gas, isolated from interconnections with other pipelines, and sealed without removing the pipe from the trench. The FERC believes that this approach generally minimizes surface disturbance and other potential environmental impact. The aboveground pipeline at compressor and meter

stations would be completely removed, including all related aboveground equipment and foundations, and the station sites would be restored to as near original condition as possible. The CSLC's policy is to require complete removal of abandoned facilities unless at the time of removal it can be demonstrated that there would be more long-term impacts from removal than abandonment.

Upon abandonment of the pipeline, in part or in whole, the rights-of-way associated with the abandoned facilities would normally be returned to the landowners/land management agencies according to the specific easement agreements between the pipeline company and the landowners/land management agencies. After abandonment, the pipeline right-of-way could be used for other utility rights-of-way (*e.g.*, fiber optic lines).