DOCKET
09-AFC-9
DATE
REC'D MAR 26 2010

Staff Assessment and
Draft Environmental Impact Statement
and
Draft California Desert Conservation Area Plan Amendment

RIDGECREST SOLAR POWER PROJECT

Application For Certification (09-AFC-9)
Kern County

U.S. BUREAU OF LAND MANAGEMENT
and
CALIFORNIA ENERGY COMMISSION

STAFF ASSESSMENT - DRAFT ENVIRONMENTAL IMPACT STATEMENT

MARCH 2010
(09-AFC-9)
CEC-700-2010-008
DES-10-14

PROOF OF SERVICE (REVISED 03/02/10) FILED WITH
CD COPIES MAILED FROM SACRAMENTO ON 03/26/10
AA

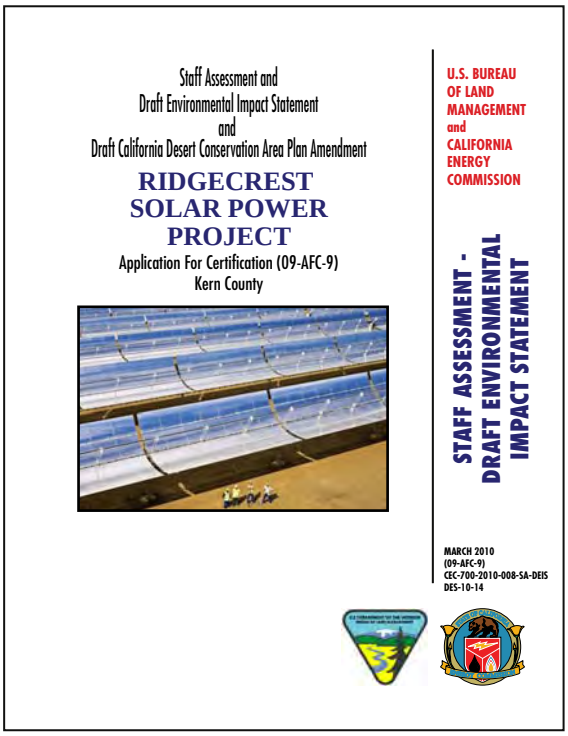

U.S. BUREAU OF LAND MANAGEMENT

Janet Eubanks
Project Manager

Hector A. Villalobos
Ridgecrest Field Manager

James Wesley Abbott
Acting State Director

CALIFORNIA ENERGY COMMISSION

SITING OFFICE

Eric Solorio
Project Manager

Eileen Allen
Siting Office Manager

SITING, TRANSMISSION AND ENVIRONMENTAL PROTECTION DIVISION

Terrence O'Brien
Deputy Director

RIDGECREST SOLAR POWER PROJECT
(09-AFC-9)
STAFF ASSESSMENT/DRAFT ENVIROMENTAL IMPACT STATEMENT

EXECUTIVE SUMMARY

A. INTRODUCTION

B. THE PROPOSED PROJECT AND ALTERNATIVES

- **B.1 DESCRIPTION OF THE PROPOSED PROJECT AND ALTERNATIVES**
- **B.2 ALTERNATIVES**
- **B.3 CUMULATIVE SCENARIO**

C. ENVIRONMENTAL ANALYSIS

- **C.1 AIR QUALITY**
- **C.2 BIOLOGICAL RESOURCES**
- **C.3 CULTURAL RESOURCES AND NATIVE AMERICAN VALUES**
- **C.4 HAZARDOUS MATERIALS MANAGEMENT**
- **C.5 LAND USE, RECREATION, AND WILDERNESS**
- **C.6 NOISE AND VIBRATION**
- **C.7 PUBLIC HEALTH AND SAFETY**
- **C.8 SOCIOECONOMIC AND ENVIRONMENTAL JUSTICE**
- **C.9 SOIL AND WATER RESOURCES**
- **C.10 TRAFFIC AND TRANSPORTATION**
- **C.11 TRANSMISSION LINE SAFETY AND NUISANCE**
- **C.12 VISUAL RESOURCES**
- **C.13 WASTE MANAGEMENT**
- **C.14 WORKER SAFETY AND FIRE PROTECTION**

D. ENGINEERING ANALYSIS

- **D.1 FACILITY DESIGN**
- **D.2 GEOLOGY, PALEONTOLOGY, AND MINERALS**
- **D.3 POWER PLANT EFFICIENCY**
- **D.4 POWER PLANT RELIABILITY**
- **D.5 TRANSMISSION SYSTEM ENGINEERING**

E. GENERAL CONDITIONS

F. LIST OF PREPARERS AND REVIEWERS

G. WITNESS QUALIFICATIONS AND DECLARATIONS

APPENDIX 1 – SCOPING REPORT

EXECUTIVE SUMMARY

Testimony of Eric K. Solorio

INTRODUCTION

Solar Millennium LLC ("Applicant") filed an application with the U.S. Bureau of Land Management (BLM) for a Right-of-Way (ROW) grant on public land (CACA 049016) together with a related Plan of Development (POD) 4th revision dated February 2, 2010, a Draft Land Use Plan Amendment (DPA) to the California Desert Conservation Area (CDCA) as amended, and is seeking approval to develop the Ridgecrest Solar Power Project (RSPP). The applicant also filed an Application for Certification (09-AFC-9) with the Energy Commission to license the same project. The filing of these applications triggered the need for both agencies to conduct an environmental review of the proposed project. When considering a project for licensing, the Energy Commission is the lead state agency under the California Environmental Quality Act (CEQA), and its certified regulatory program is functionally equivalent to the preparation of an Environmental Impact Report (EIR). Similarly, for the purpose of considering the application for a ROW grant and POD, the BLM is the lead federal agency under the National Environmental Policy Act (NEPA).

This Staff Assessment/Draft Plan Amendment/Draft Environmental Impact Statement (SA/DPA/DEIS) contains an independent evaluation of the RSPP. The SA/DPA/DEIS contains analyses similar to an EIR required by CEQA, and also contains analyses required for a DPA and a DEIS, prepared in accordance with NEPA. Overall, the document contains an independent assessment of the project's design and engineering, and identifies potential impacts to the environment; the public's health and safety, and determines whether the project conforms to all applicable laws, ordinances, regulations and standards (LORS).

The SA/DPA/DEIS is a joint, environmental document because it was generated and published by the BLM and the California Energy Commission (CEC) to meet the needs of both CEQA and NEPA. The joint document approach was implemented because it is in the best interest of the BLM and the Energy Commission to share in the preparation of a single environmental document, in order to avoid duplication of staff efforts, to share staff expertise and information, to promote intergovernmental coordination at the local, state, and federal levels, and to facilitate public review by providing a single comprehensive document for a more efficient environmental review process.

PROPOSED PROJECT LOCATION AND GENERAL PROJECT DESCRIPTION

PROJECT LOCATION AND VICINITY

The RSPP is proposed to be developed on approximately 2,000 acres of the 3,995-acre site, currently managed by the BLM. The project site is located in north eastern Kern County, along U.S. Highway 395, just west of the China Lake Boulevard exit. The site is

approximately five miles southwest of Ridgecrest, California. Ridgecrest is at the southwestern boundary of the China Lake Naval Air Weapons Station (NAWS).

PROPERTY DESCRIPTION

The proposed RSPP is entirely on Federal land, described as follows: Township 27 and 28 South, Range 39 East The applicant filed an amended by SF-299 application with the BLM on February 9, 2010 adjusting the previous acreage from 3,920 to approximately 3,995 to avoid El Paso Wash that was within the project's original footprint. Under the amended application, construction and operation of the project would disturb a total of about 1,944 acres As such, any difference between the total acreage listed in the Right of Way application (3,995) and the total acreage required for project construction and operation (approx. 1,944) would be reduced if authorized to the total disturbed area.

The following Kern County Assessor's Parcel Number's identify the parcels within the overall ROW boundary for the proposed RSPP:

APN 341-091-08	APN 341-091-10	APN 341-091-11	APN 341-110-01
APN 341-110-02	APN 341-110-03	APN 341-110-05	APN 341-110-06

GENERAL PROJECT DESCRIPTION

The proposed RSPP is a concentrated solar powered, electric generating facility that would have a nominal electrical output of 250 megawatts (MW). The process for electric power generation would be to utilize parabolic trough, solar collectors to concentrate solar energy onto heat collection elements that contain a fluid, known as "heat transfer fluid" (HTF). After being heated by the solar troughs, the HTF is run through a heat exchanger where it boils water for conversion to steam. In the next stage, the high pressure steam drives a Rankine-cycle reheat, steam turbine, electric generator.

The project would use an air-cooled condenser (ACC), commonly referred to as "dry cooling". The ACC would eliminate the need to use water for power plant cooling and eliminate visible plume associated with wet cooling towers. Total water consumption (balance of plant) for the 250-MW facility is estimated at approximately 150 acre-feet per year, which is proposed to be supplied by the Indian Wells Valley Water District (IWVWD) via a new pipeline. The new 12 to 16-inch diameter, five-mile long water pipeline would be installed within the Brown Road and China Lake Boulevard rights-of-way to a point of connection with the IWVWD water tank.

A new 230kV transmission line from a new switchyard will connect to a new substation that will in turn interconnect with Southern California Edison's (SCE) existing 230kV Inyokern/Kramer Junction transmission line passing west of the Project site. Additionally, the Project will require the relocation of roughly 10,000 feet (1.6 miles) of two existing transmission lines owned and operated by SCE. The first is a double-circuit 230kV line (with one of the circuits currently operated at 115kV) and the second is a double-circuit 115kV line.

For a more detailed description of the proposed project; and the alternative projects and actions that were considered and analyzed, please see the **PROJECT DESCRIPTION** section.

PUBLIC NOTICES, OUTREACH, AND PUBLIC AND AGENCY INVOLVEMENT

BLM'S INITIAL PUBLIC NOTICE AND OUTREACH

BLM staff issued a formal Notice of Intent (NOI) to prepare an Environmental Impact Statement for the RSPP, and also identified the beginning and end of the Scoping Period. The formal notice was published in the Federal Register, Volume 74, No. 224, Monday, November 23, 2009.

On December 8, 2009, the BLM staff mailed out public notices, informing the public of the NOI. This information was also provided on the BLM's Ridgecrest Field Office's internet website which is also connected to the California Desert District's renewable energy website.

On January 5, 2010 the BLM held a publicly noticed Scoping Meeting at the Ridgecrest, City Hall, Council Chambers in Ridgecrest, California. On January 6, 2010 the BLM held a second publicly noticed Scoping Meeting at the Inyokern, Town Hall in Inyokern, California. Scoping comments were received from the public and are included in this SA/DPA/DEIS, in Appendix 1.

ENERGY COMMISSION STAFF'S PUBLIC OUTREACH

Energy Commission staff provides formal notices to property owners within 1,000 feet of the proposed site and within 500 feet of a linear facility (such as transmission lines, gas lines and water lines). Staff mailed the public notices on September 12, 2009, informing the public, agencies and elected officials of the Commission's receipt and availability of the application, 09-AFC-9. Additionally, each notice contained a link to a website the Energy Commission set up for the project:
http://www.energy.ca.gov/sitingcases/solar_millennium_ridgecrest/index.html.

Libraries

Concurrent with the initial public notice of September 12, 2009, the Energy Commission staff also sent copies of the RSPP AFC to the following libraries:

Ridgecrest Public Library 131 E Las Flores Ave Ridgecrest, CA 93555-3648	Walter Stiern Memorial Library 3000 College Heights Blvd Ridgecrest, CA 93555-9571
Boron Library 26965 Twenty Mule Team Rd Boron, CA 93516-1550	San Bernardino Library 82805 Mountain View St Trona, CA 93562-1920
Kern County Library 9507 California City Blvd California City, CA 93505-2280	Naval Air Warfare Tech Library 1 Administration Cir Ridgecrest, CA 93555-6104

In addition, to these local libraries, copies of the AFC were also made available at the Energy Commission's Library in Sacramento, the California State Library in Sacramento, as well as, state libraries in Eureka, Fresno, Los Angeles, San Diego, and San Francisco.

Energy Commission's Public Adviser's Office

The Energy Commission's outreach program is also facilitated by the Public Adviser's Office (PAO). This is an ongoing process that to date has included, paid advertising in the Ridgecrest Daily Independent on December 30, 2009 and January 2, 2010, and paid advertising in the Kern Valley Sun on December 30, 2009. The PAO also requested public service announcements at a variety of organizations including Ridgecrest City Council, three separate Chambers of Commerce, one television station and two radio stations (CEC 2010s). These notices informed the public of the Commission's receipt of the RSPP allocation 09-AFC-9 and invited the public to attend the Public Site Visit (proposed RSPP site) and Informational Hearing/BLM Scoping Meeting.

BLM AND CEC PUBLIC WORKSHOPS

The BLM staff together with Energy Commission staff publicly noticed and held workshops in Ridgecrest, CA, on the following days: December 15, 2009, January 5, 2010 and January 6, 2010 (CEC 2009i and CEC 2009n). During each of these workshops specific time for public comment was allocated in the meeting agenda and public comment was taken during the morning and afternoon sessions of each workshop. These workshops provided a public forum for the applicant, intervener, staff and cooperating agencies to interact regarding the more substantive project issues. At the workshops, staff also provided preaddressed forms for public comment and encouraged the public to use the forms to submit written comments which some members of the public did. Agency Coordination and government-to-government consultation with Native American communities

Policy Level and Programmatic Agency Coordination

On August 8, 2007, the California Energy Commission and the Bureau of Land Management signed an Memorandum of Understanding (MOU) for the purpose on agreeing to prepare joint environmental documents for proposed, solar thermal projects which fall under the jurisdiction of both agencies. The MOU outlines roles and responsibilities of the cooperative process.

On October 12, 2009, California's Governor, Arnold Schwarzeneggar, signed an MOU with the U.S. Department of the Interior's Secretary, Ken Salazar. The purpose of the MOU "is to direct California Agencies and Department of the Interior Agencies…to take the necessary actions to further the implementation of the Governors Executive Order S-14-08 and the Secretary's Order 3285 in a cooperative, collaborative, and timely manner". The agencies identified to in the MOU are the California Department of Fish and Game (CDFG), California Energy Commission (CEC), Bureau of Land Management (BLM) and the U.S. Fish and Wildlife Service (FWS). The MOU also outlined specific objectives.

On January 26, 2010, the U.S. Department of the Interior's Bureau of Land Management signed a Memorandum of Understanding (MOU) with the U.S. Department of Energy's (DOE) Loan Guarantee Program (LGP) office. The purpose of the MOU is to provide a framework for the BLM and the LPG to cooperate in preparing Environmental Assessments, Environmental Impact Statements for renewable energy project's that require federal actions be taken by both the BLM and the LGP.

Project Specific Agency Coordination

On September 12, 2009, the Energy Commission staff sent a notice of receipt and a copy of the RSPP Application for Certification to all local, state, and federal agencies that might be affected by the proposed project. Staff continues to seek cooperation and or comments from regulatory agencies that administer LORS which may be applicable to proposed project. These agencies include the U.S. Environmental Protection Agency, U.S. Fish and Wildlife Service, U.S. Army Corps of Engineers, California Coastal Commission, State Water Resources Control Board/Regional Water Quality Control Board, California Department of Fish and Game, California Air Resources Board and Kern County, among others.

Staff has worked closely with the CDFG and the FWS to evaluate the proposed RSPP. Both CDFG and the FWS have attended and participated in public workshops to address the wildlife issues and related "Incidental Take Permits" required for the proposed RSPP. Additionally, staff has benefited from the cooperation of the CDFG in evaluating the proposed streambed alteration agreements that would normally fall under CDFG's jurisdiction if not for the Energy Commission's "in lieu" permitting authority.

Staff also worked closely with the Regional Water Quality Control Board (RWQCB), Lahontan District. The RWQCB assisted staff in evaluating the proposed RSPP with respect to potential impacts on water quality and the proposed reuse of process water on site for mirror washing. The RWQCB has been instrumental in providing staff with suggested language for waste discharge requirements.

Staff has also worked closely with Kern County to identify and apply county LORS, gather information regarding potential impacts to county services, develop a mitigation program to offset impacts to potable water resources, and consider the county's suggested mitigation measure for impacts to traffic and transportation resources.

Government to Government Consultation - Notification of the Local Native American Communities

The BLM staff sent letters to various tribes on June 17, 2009. The letter provided an initial briefing on the project and a request for any comments and concerns. The deadline for response was Aug. 7, 2009. The letters were mailed to the following six (6) recipients:

1. Mr. Harold William, Tribal Chair; Kern Valley Indian Council, PO Box 147, Caliente CA 93518; primary federally unrecognized tribe in eastern Kern County, representing Kawaiisu, Tubatulabals, Paiute, and Yokuts native peoples.

2. Mr. Bob Robinson, Tribal Historic Preservation Officer, Kern Valley Indian Council, PO Box 401, Weldon CA 93283

3. Ms. Donna Miranda-Begay, Tribal Chair; Tubatulabals of Kern Valley Tribe; primary federally unrecognized tribe in eastern Kern County representing Tubatulabals of the Miranda and White Blanket tribal allotments, Kern River Valley.

4. Mr. Ron Wermuth, Council Chair; Monache Intertribal Council, PO Box 168, Kernville CA 93238; oldest Native American community organization in Kern River Valley.

5. Ms. Arlene Apalatea, Co-Chair, Nuui Cunni Interpretative Center, PO Box 3984, Wofford Heights CA 93285; operated the Nuui Cunni Center under Special Use Permit from Sequoia National Forest for public education on the culture of the Indians of Kern County. Also known as the Kern River Paiute Council, and Raymond Vega.

6. Ms. Kathy Paradise, Program Lead, Lake Isabella Office, Owens Valley Career Development Center, PO Box 2895, Lake Isabella CA 93240; community social outreach organization in Lake Isabella area.

A second set of letters were mailed to various tribes on October 21, 2009. The letters provided a reminder, contained in a consultation letter regarding three wind energy projects near city of Mojave, eastern Kern County, that the BLM was also reviewing the RSPP project, and again asked for comments and any concerns. The deadline for response was set for December 18, 2009. The letters were mailed to the following six (6) recipients:

1. Tribal Chair, Kern Valley Indian Council, PO Box 1010, Lake Isabella CA 93240

2. Mr. Bob Robinson, Tribal Historic Preservation Officer, Kern Valley Indian Council

3. Ms. Donna Miranda-Begay, Tribal Chair; Tubatulabals of Kern Valley Tribe

4. Mr. Ron Wermuth, Council Chair; Monache Intertribal Council

5. Ms. Arlene Apalatea, Co-Chair, Nuui Cunni Interpretative Center

6. Ms. Kathy Paradise, Lake Isabella Office, Owens Valley Career Development Center

A third set of letters were mailed to tribes on February 5, 2010 and provided an update on the project review, CEC-BLM workshops that were held in December 2009 and January 2010; Native American input that was received, the SA/EIS being released soon, cultural resources survey in summer 2009, invited to consult on eligibility evaluations of archeological sites; invited to be consulting on the Programmatic Agreement (PA) being prepared by BLM, State Historic Preservation Office (SHPO), and the Advisory Council on Historic Preservation (ACHP). The letter identified the deadline for response as March 12, 2010. The letters were mailed to the following five (5) recipients:

1. Ms. June Price, Tribal Chair, Kern Valley Indian Council,

2. Mr. Bob Robinson, Tribal Historic Preservation Officer, Kern Valley Indian Council

3. Ms. Donna Miranda-Begay, Tribal Chair; Tubatulabals of Kern Valley Tribe

4. Mr. Ron Wermuth, Council Chair; Monache Intertribal Council

5. Ms. Arlene Apalatea, Co-Chair, Nuui Cunni Interpretative Center

SUMMARY OF SCOPING COMMENTS IN RESPONSE TO THE BLM'S NOTICE OF INTENT

Summary of the Scoping and Draft Comment Process

The BLM published a Notice of Intent (NOI) to prepare an Environmental Impact Statement (EIS) on November 23, 2009 in the Federal Register. Publication of the NOI began a 30-day comment period which ended on January 21, 2009. BLM provided a website with Project information that also described the various methods of providing public comment on the Project including an e-mail address where comments could be sent electronically.

Notification for a public Scoping Meeting held on January 5, 2010 appeared in the Riverside Press Enterprise and several other local media and newspapers on November 24, 2009. Notification was also published on the BLM website on November 23, 2009.

A public Scoping Meeting was held on January 5, 2010 at the Ridgecrest City Hall located at 100 W. California Ave., Ridgecrest, California. A presentation describing the Project was made by Solar Millennium, LLC with presentations describing the environmental review process presented by members of the BLM and CEC. One-hundred and twenty attendees were documented by signing in on a voluntary sign-in sheet.

Forty-eight comment letters were received between both agencies within the comment period ending on December 21, 2009.

Issues were identified by reviewing the comment documents received. Many of the comments identified similar issues; all of the public comment documents were reviewed and the following section provides a summary of the issues, concerns, and/or questions raised. Issues have been grouped into one of the three following categories:

- Issues or concerns that could be addressed by effects analysis;
- Issues or concerns that could develop an alternative and/or a better description or qualification of the alternatives;
- Issues or concerns outside the scope of the EIS.

The comments discussed below are paraphrased from the original comment letters. To a minor degree, some level of interpretation was needed to identify the specific concern to be addressed. Many of the comments identified similar issues; to avoid duplication and redundancy similar comments were grouped together and then summarized. Original comment letters may be reviewed upon request at the BLM California Desert District at 22835 Calle San Juan De Los Lagos, Moreno Valley, California, 92253, during normal business hours, from 8:00 am to 4:00 pm.

Summary of Comments (Matrix/Table)

SCOPING COMMENTS MATRIX
JANUARY 5TH AND 6TH, 2010 SCOPING MEETINGS

NAME	DATE	PROCESS/FAST TRACK/LNP	ALTERNATIVES	AIR / HEALTH	BIOLOGY / BOTANY/RES	CLIMATE CHANGE	CULTURAL / NATIVE AMERICAN	ECONOMIC/SOCIOECONOMIC	OTHER_CONSIDERATIONS/CUMULATIVE IMPACT	TRAFFIC/ACCESS	WATER/HYDROLOGY	VISUAL/VRM/AESTHETICS	WILDLIFE/T&E/HABITAT	LIGHTING/PUBLIC UTILITIES	DESIGN	FLOODING	RECREATION/OHV	SOIL/GEOLOGY	HAZMAT	NOISE	ADD TO MAILING
A. Archerd	12/10/2009									X											
A. DeMay	1/14/2010										X										
B. & S. Steele	1/14/2010											X									
B. Hughes	12/6/2009-12/7/2009				X				X		X	X	X		X			X			
B. Parker	1/20/2010																				X
C. Lyle Fisher	1/11/2010								X												
Greg Suba, California Native Plant Society	12/23/2009				X				X		X	X									
California Unions for Reliable Energy (CURE)	12/9/2009			X			X	X	X		X	X	X		X			X		X	
Center for Biological Diversity	12/23/2009	X		X	X	X			X		X	X	X					X			
Coplay	12/9/2009																				X
D. Burdick	1/21/2010			X																	
D. Fallgatter	1/20/2010										X				X						
D. G. Burnett	1/20/2010			X	X				X		X		X								
D. Maggie	1/21/2010			X							X		X	X							
D. Miranda-Begay, Tribal Chairwoman Tubatulabals of Kern Valley Tribe	12/14/2009				X		X	X													

SCOPING COMMENTS MATRIX
JANUARY 5TH AND 6TH, 2010 SCOPING MEETINGS

NAME	DATE	PROCESS/FAST TRACK/LNP	ALTERNATIVES	AIR / HEALTH	BIOLOGY / BOTANY/RES	CLIMATE CHANGE	CULTURAL / NATIVE AMERICAN	ECONOMIC/SOCIOECONOMIC	OTHER_CONSIDERATIONS/CUMULATIVE IMPACT	TRAFFIC/ACCESS	WATER/HYDROLOGY	VISUAL/VRM/AESTHETICS	WILDLIFE/T&E/HABITAT	LIGHTING/PUBLIC UTILITIES	DESIGN	FLOODING	RECREATION/OHV	SOIL/GEOLOGY	HAZMAT	NOISE	ADD TO MAILING
S. Silliman, Desert Tortoise Council	1/21/2010				X								X								
Don Peterson	1/21/2010		X		X		X		X		X				X						
E. Copley	12/9/2009																				X
E. Middlemiss	1/20/2010										X		X								
Fish and Wildlife Services	12/23/2009		X		X								X								
Friends of Last Chance Canyon - Charles Hattendorf	1/19/2010			X							X										
J. & J. Bell	12/14/2009									X											
J. & S. Tipton	1/14/2010										X										
J. Aardahl Defenders of Wildlife	1/19/2010		X		X								X								
J. Decker	1/18/2010			X	X						X		X								
J. Robinson	1/14/2010				X																
J. Westbrook	11/26/2009				X								X								
K. Cox	12/16/2009																				X
K. Emmerich	11/28/2009	X				X															
K. Fite Western Watersheds Project	11/30/2009		X		X	X			X		X	X	X					X			
Kern County Planning Department	1/5/2010	X						X		X						X					

SCOPING COMMENTS MATRIX
JANUARY 5TH AND 6TH, 2010 SCOPING MEETINGS

NAME	DATE	PROCESS/FAST TRACK/LNP	ALTERNATIVES	AIR / HEALTH	BIOLOGY / BOTANY/RES	CLIMATE CHANGE	CULTURAL / NATIVE AMERICAN	ECONOMIC/SOCIOECONOMIC	OTHER_CONSIDERATIONS/CUMULATIVE IMPACT	TRAFFIC/ACCESS	WATER/HYDROLOGY	VISUAL/VRM/AESTHETICS	WILDLIFE/T&E/HABITAT	LIGHTING/PUBLIC UTILITIES	DESIGN	FLOODING	RECREATION/OHV	SOIL/GEOLOGY	HAZMAT	NOISE	ADD TO MAILING
Kerncrest Chapter National Audubon Society	1/12/2010	X			X							X	X	X							
L. Cunningham Basin & Range Watch	1/24/2010								X												
L. Sutton	1/9/2010		X																		
M.J. McEwan Law Office on behalf of Desert Tortoise Preserve Council	1/21/2010	X	X									X	X				X				
M. Beck	1/17/2010									X											
M. Boggs	1/21/2010		X	X	X				X		X										
M. Decker	1/20/2010			X						X											
M. Gire	1/24/2010								X												
M. Grossglass	12/8/2009								X												
M. J. Connor PH.D Western Watershed Project	1/21/2010		X		X					X	X		X					X			
M. J. Connor PH.D Western Watershed Project	12/23/2009	X	X		X	X	X		X		X	X	X					X			
M. Lloyd	1/19/2010										X		X								
M. Luebs-Goedecke	1/15/2010		X										X								

SCOPING COMMENTS MATRIX
JANUARY 5TH AND 6TH, 2010 SCOPING MEETINGS

NAME	DATE	PROCESS/FAST TRACK/LNP	ALTERNATIVES	AIR / HEALTH	BIOLOGY / BOTANY/RES	CLIMATE CHANGE	CULTURAL / NATIVE AMERICAN	ECONOMIC/SOCIOECONOMIC	OTHER_CONSIDERATIONS/CUMULATIVE IMPACT	TRAFFIC/ACCESS	WATER/HYDROLOGY	VISUAL/VRM/AESTHETICS	WILDLIFE/T&E/HABITAT	LIGHTING/PUBLIC UTILITIES	DESIGN	FLOODING	RECREATION/OHV	SOIL/GEOLOGY	HAZMAT	NOISE	ADD TO MAILING
Off-Road Business Association Inc	1/18/2010			X		X															
P. Dejohn	2/5/2010			X				X	X												
P. LePome	1/15/2010																				
R. Bransfield, USFWS, Ventura office	12/23/2009		X		X																
R Kelso	12/15/2009		X																		
R. Thompson, P.E.	1/21/2010								X												
S. Ellis	12/30/2009		X																		
S. Steele	1/14/2010																				
T. Budlong	11/29/2009 - 12/15/2009	X	X						X												
A. McPherson - U.S. EPA	11/30/2009	X	X	X	X		X	X	X	X	X		X			X		X	X		
T. Middlemiss, Kerncrest Chapter Nat'l Audubon Society	12/15/2009 & 1/12/10		X								X		X								
V Mitchell	1/5/2010-1/10/2010-1/11/2010		X								X	X		X	X			X			X
Charles Hattendorf	1/19/2010			X			X				X	X		X							
Daniel G. Burnett	1/20/2010		X	X						X	X										

Identified Scoping Concerns and Issues

A. Resource Areas and Cumulative Impacts

Purpose and Need

- Project description should not be narrowly defined to rule out feasible alternatives

Air Resources (Air sheds)

- Greenhouse gas emissions/climate change impacts on plants, wildlife, and habitat adaptation
- Planning for species adaptation due to climate change
- Discussion of how projected impacts could be exacerbated by climate change such as water supply and reliability
- Quantify and disclose anticipated climate change benefits of solar energy
- Discussion of trenching/grading/filling and effects on carbon sequestration of the natural desert

Soils Resources

- Baseline conditions should be described and if the site is disturbed or impaired
- Impacts to desert soils
- Site area is prone to flooding; analysis must address how this may change
- Increased siltation during flooding and dust (see public health as well)
- Disturbance of soils in desert locations can lead to the introduction of invasive weeds
- Preparation of a drainage, erosion, and sediment control plan

Water Resources (Surface and Ground water)

- Effects of additional groundwater pumping in conjunction with other groundwater issues
- Groundwater impacts
- A description of the water rights permitting process and the status of water rights in the basin, including an analysis of whether the water has been over allocated
- An analysis of water reduction alternatives and alternative water sources
- Mitigation options require careful preparation and monitoring
- Water supply impacts related to dust control, fire prevention and containment, vegetation management, sanitation, equipment maintenance, construction, and human consumption

Biological Resources

- If there are threatened or endangered species present, recommend BLM consult with USFWS and prepare a Biological Opinion under Section 7 of the ESA
- Impacts to all known species, not just special status, should be analyzed to assure ecosystem level protection—permanent loss of 4,000 acres of habitat and associated species is significant and cannot be mitigated
- Define and discuss the condition of threatened species in terms or recovery or decline and how use of this site affects these circumstances
- Eliminate all grazing in the area and add fencing to exclude Off-Highway Vehicle (OHV) trails and use
- Maximize options to protect habitat and minimize habitat loss and fragmentation
- Impacts associated with constructing fences
- Seasonal surveys should be performed for sensitive plant and animal species
- The proposed site is too important to the desert tortoise survival; alternative site is required
- The potential impact to the Mohave ground squirrel at this location cannot be mitigated
- Acquisition of lands for conservation should be part of mitigation strategy
- Mitigation should be 5:1 ratio for habitat removed
- Adaptive management should be considered in program design
- Mitigation should consider the removal of grazing land in habitat designated areas
- Impacts regarding habitat fragmentation and loss of connectivity
- Impact on washes
- Assess if ravens or other predators will be attracted to mitigation sites.

Vegetation Resources (Vegetative communities, priority and special status species)

- Identify all petitioned and listed threatened and endangered species and critical habitat that might occur within the Project area
- Include a full floral inventory of all species encountered on-site
- Seasonal surveys should be performed for sensitive plant species—lack of fall surveys may under represent onsite plants
- If transplantation is to be a part of the mitigation strategy, a detailed plan must be included as part of the EIS/SA
- Assess project impacts affecting plant taxa occurring within the project area that are considered rare within California but more common elsewhere
- Impacts to existing plant communities

Wildlife Resources (Priority species, special status species)

- Desert tortoise; high population density translocation proposed results in high mortality; portion of site designated as critical habitat for the MGS (Mohave Ground Squirrel).
- Impacts to the following species:
  - Burrowing owl
  - Mojave Fringe Toed Lizard
  - Desert Kit Fox
- Impacts to wildlife movement corridors
- Preserve large landscape-level migration areas

Cultural Resources

- Have archaeological sites been evaluated pursuant to the National Register of Historic Places criteria?
- Site has significant Native American history
- Evaluate impacts affecting sacred sites and sacredness.
- Evaluate potential impacts on archeological, cultural, and historical resources in the vicinity of the Project, including, but not limited to: (1) Native American resources, burial sites, and artifacts; and (2) historical mining operations and related artifacts.

Visual Resources

- Visual impacts to wilderness areas; increased light pollution on desert night sky
- Avoid impacts affecting visually sensitive areas
- Analyze the project's aesthetic and visual impacts that could affect desert star gazing and Native American practices

Land Use/Special Designations (ACECs, WAs, WSAs, etc.)

- Applicant implies that biological resources within project area are not sensitive because not located within Areas of Critical Concern (ACEC) or Desert Wildlife Management Area (DWMA), but many areas outside such designated areas do contain significant biological resources
- Use private land not public lands
- Describe reasonably foreseeable future land use and associated impacts resulting from additional power supply

Public Health and Safety

- Evaluate the effects of valley fever from disturbed soils.
- Describe the HTF, potential remediation if spilled, remediation plans and offsite disposal

Noise/Vibration

- Consider wildlife as sensitive receptors
- Dry cooling process noise/vibration impacts on wildlife

Recreation (RMAs, facilities, LTVAs, dispersed recreation opportunities, etc.)

- Evaluation should include impacts regarding OHV use, camping, photography, hiking, wildlife viewing, and rock hounding.
- Evaluation should include number of users, value of affected land for recreational purposes, and need to locate and acquire replacement venues for lands lost
- Indirect impacts caused by displacing recreational users
- Cumulative loss of land available for OHV recreation

Social and Economic Setting

- Evaluation of economic impacts due to construction, implementation, and operation.
- Economic impacts regarding loss of commerce due to recreational use losses.

Environmental Justice (minority and low-income communities)

- Evaluation whether diminished recreational access would be placed disproportionately on minorities and low-income communities.

Cumulative Impacts

- Identify impacts from other projects occurring in the vicinity, including solar, wind, geothermal, roads, transit, housing, OHV use, military maneuvers, and other development
- Include reasonably foreseeable projects; include all the solar and wind applications within vicinity of Ridgecrest
- Identify cumulative impacts of the addition of numerous renewable energy projects on the desert
- Include discussion of cumulative impacts to ground water supply
- Analyze the potential for development and population growth to occur in those areas that receive the generated electricity
- Describe the reasonably foreseeable future land use and associated impacts that will result from the additional power supply; i.e., recreation, grazing, OHV.
- Examine the potential for ecosystem fragmentation associated with the cumulative effects of large-scale industrial development occurring in the California Desert areas
- Analyze the project's cumulative impacts affecting biological resources
- The cumulative impacts analysis should address species migration needs and other ecological processes that maybe caused by global climate change

B. Alternative Development and/or Alternative Design Criteria

Comments in this category will be considered in the development of alternatives or can be addressed through design criteria in the alternative descriptions.

- Project description should not be narrowly defined to rule out feasible alternatives
- Describe how each alternative was developed, how it addresses each project objective, and how it would be implemented
- The preferred alternative should consider conjunctive use of disturbed private land in combination with adjacent lower value federal land
- Consider reduced project size
- Alternatives should include: sites not under BLM jurisdiction such as fallowed alfalfa fields north of the city ;
- Alternatives should describe rationale used to determine whether impacts of an alternative are significant or not
- Local high winds in the valley will affect design and cooler temperatures at the site will likely require more energy to keep the HTF warm and fluid in the winter months
- Consider reconfiguration alternatives proposed by F&WS to minimize impacts to wildlife movement and sensitive biological resources and washes.
- Consider cost and efficiency of energy for different technologies
- Consider alternative technologies that require significantly less water
- Consider the no-action alternative

C. Issues or Concerns Outside the Scope of the EIS

Comments in this category are outside the scope of analysis and will not be addressed in the EIS. Rationale for considering these comments out-of-scope is included.

- Consider development wherein solar and wind is focused first on lands which have lower resource value due to fragmentation, type conversion, edge effects, and other factors
- Consider abandoning the “fast track” approach because it does not allow enough time for an adequate analysis of impacts affecting natural, historical and cultural resource on and around the project site

BLM’S DISCRETIONARY ACTIONS (FOR BLM AND NEPA PURPOSES ONLY)

BLM is required to process ROW applications and to make a decision to either deny the ROW, grant the ROW as requested, or grant a modified ROW. It is a discretionary decision to grant a ROW or a modified ROW.

BLM'S PREFERRED ALTERNATIVE (FOR BLM AND NEPA PURPOSES ONLY)

BLM's objective in selecting a preferred alternative is to meet the purpose and need of the project, including the proposed project generating capacity, while appropriately mitigating environmental impacts. Currently, BLM has identified the February 2, 2010 amended application as the preferred alternative because it avoids El Paso Wash, the surrounding floodplain, and related high quality habitat. This reduces impacts to Mohave ground squirrel habitat compared with the original proposed project. The preferred alternative incorporates avoidance minimization measures and meets BLM's purpose and need to make a decision about the ROW application, while also allowing the development of 250 MW of renewable energy. Section 211 of the Energy Policy Act of 2005 mandates that up to 10,000 MW of non-hydropower renewable energy projects be approved on public lands by 2015. The preferred alternative's impacts to biological resources requires further review. As BLM and CEC continue their joint review, analysis of both public and agency comment will be considered in the selection of the final preferred alternative that will be presented in the SSA/FEIS. A Notice of Availability (NOA) of the FEIS will be published in the Federal Register when the FEIS is completed; the BLM will issue a Record of Decision (ROD) no earlier than 30 days after the FEIS is published.

The environmentally preferred alternative is the no action alternative. This alternative would not allow the development of renewable energy and would not have impacts on resources. However, it also would not provide the positive impacts of developing renewable energy related to climate change and global warming.

SUMMARY OF ENVIRONMENTAL IMPACTS AND RELATED MITIGATION (FOR ENERGY COMMISSION AND CEQA PURPOSES ONLY)

With the exception of the technical areas identified below, CEC staff believes that as currently proposed, including the applicant's and the staff's proposed mitigation measures incorporated into staff's proposed conditions of certification, the proposed RSPP would comply with all applicable laws, ordinances, regulations, and standards (LORS).

For a more detailed review of potential impacts and LORS conformance, see staff's technical analyses in each chapter of the SA/DPA/DEIS. The status of each technical area is summarized in **Executive Summary Table 1** below and the subsequent text.

Executive Summary Table 1

Technical Area	Complies with LORS	Impacts Mitigated
Air Quality	Yes	Yes
Biological Resources	***No***	***No***
Cultural Resources	Yes	Yes
Efficiency	Yes	Yes
Facility Design	Yes	Yes
Geology & Paleontology	Yes	Yes
Hazardous Materials	Yes	Yes
Land Use	Yes	Yes
Noise and Vibration	Yes	Yes
Public Health	Yes	Yes
Reliability	Yes	Yes
Socioeconomic Resources	Yes	Yes
Soil & Water Resources	Yes	Yes
Traffic & Transportation	Yes	Yes
Transmission Line Safety/Nuisance	Yes	Yes
Transmission System Engineering	***Undetermined***	***Undetermined***
Visual Resources	Yes	***No***
Waste Management	Yes	Yes
Worker Safety and Fire Protection	Yes	Yes

ENERGY COMMISSION STAFF'S CONCLUSIONS (FOR ENERGY COMMISSION AND CEQA PURPOSES ONLY)

Biological Resources

Energy Commission biological resources staff believe the Ridgecrest Solar Power Plant (RSPP) is proposed to be constructed on land featuring unique habitat for sensitive species and biological resources. The project site supports one of the highest concentrations of desert tortoise (DT) in the western United States and represents an important geographic area which supports connectivity and genetic linkage between populations of endangered Mohave ground squirrel (MGS). The unique qualities of the site that support high concentrations of DT and MGS genetic linkage are irreplaceable and cannot be fully mitigated. Because construction of the project would permanently destroy this important biological resource, staff, based on an extensive analysis of the

project, cannot recommend that the RSPP be approved. Staff believes this site should be protected because of its importance to the DT population and its unique and critical benefits to the MGS.

Despite staff's conclusions regarding the site specific biological resources, in the event the Commission approves the project, staff has included a number of Conditions of Certification in an effort to maximize preservations of biological resources. Staff does not believe these measures are sufficient to fully mitigate the significant impacts to the project site under CEQA, but the conditions will provide the fullest practicable mitigation.

Transmission System Engineering

Generally staff relies on the California ISO Phase I /System Impact Study to determine whether or not the proposed generation project will likely comply with reliability and to identify the transmission facilities required for reliable interconnection. Due to the number of generators that have chosen not to participate in the Phase II study, the Transition Cluster projects the Phase I Study previously analyzed, no longer provides an accurate forecast of impacts of the RSPP on the SCE transmission grid. Therefore, the transmission upgrades identified in the Phase I Study are not reasonably foreseeable consequences of the proposed generating project. Relying on available information, staff is unable to identify any likely indirect project transmission impacts. Upon completion of the Phase II Study and the execution of the LGIA, the impacts of the RSPP on grid reliability will be identified. In order to ensure compliance with reliability LORS, Condition of Certification TSE-5 requires the submittal of the Phase II Study and the executed LGIA prior to the start of construction of transmission facilities.

Visual Resources

Energy Commission visual resources staff have analyzed visual resource-related information pertaining to the proposed Solar Millennium Ridgecrest Solar Power Project (RSPP) and conclude that the proposed project would result in a substantial adverse impact to existing scenic resource values as seen from several viewing areas and Key Observation Points in the project vicinity including:

- U.S. 395 in the vicinity of, and on approach to, the project area;
- Brown Road in the vicinity of, and on approach to, the project area;
- Various BLM recreational access roads in the vicinity of the project area;
- Nearby residences;
- The Railroad Bed Bike Trail in the vicinity of the project area; and
- The elevated hill immediately west of the south development area.

Energy Commission staff concludes that these visual impacts would be significant in terms of three of the four criteria of California Environmental Quality Act (CEQA) Appendix G, and could not be mitigated to less than significant levels and would thus; result in significant and unavoidable impacts under CEQA.

If the Energy Commission approves the project, Energy Commission staff recommends that all of the Energy Commission staff's proposed conditions of certification be adopted

in order to minimize impacts to the greatest extent feasible. Conditions of certification referred to herein serve the purpose of both the Energy Commission's conditions of certification for purposes of CEQA and BLM's Mitigation Measures for purposes of the National Environmental Policy Act (NEPA).

For the other technical areas, except for Visual Resources, staff finds that incorporation of the recommended Conditions of Certification would mitigate all significant impacts to less than significant levels.

REFERENCES

CEC 2010s - California Energy Commission/Public Advisers Office (tn 55905). Public Adviser's Event Advertising Form. Submitted to CEC/Docket Unit on 3/16/2010

CEC 2009i - California Energy Commission/T.O Brien (tn 54327). Notice of Public Workshop, dated 11/30/2009. Submitted to CEC/Docket Unit on 12/2/2009.

CEC 2009j - California Energy Commission/J. Boyd (tn 54344). Notice of Energy Commission Information Hearing Environmental Scoping Meeting, dated 12/3/2009. Submitted to CEC/Docket Unit on 12/3/2009.

CEC 2009n - California Energy Commission/T. O'Brien (tn 54626). Supplemental Notice of Public Workshops, dated 12/29/2009. Submitted to CEC/Docket Unit on 12/30/2009.

PROJECT DESCRIPTION- FIGURE 1

Ridgecrest Solar Power Project - Both Units

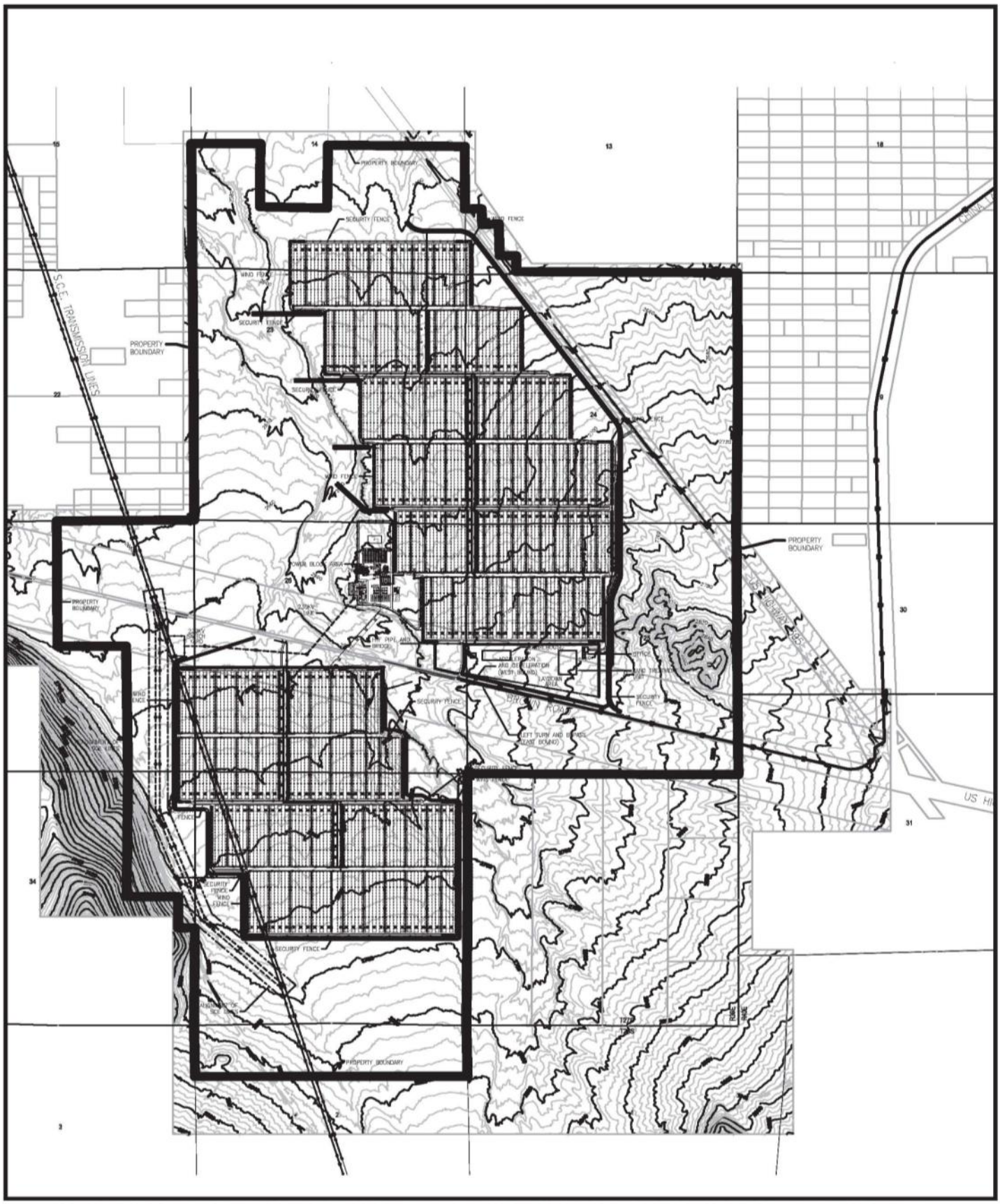

CALIFORNIA ENERGY COMMISSION - SITING, TRANSMISSION AND ENVIRONMENTAL PROTECTION DIVISION, MARCH 2010
Source: AECOM

PROJECT DESCRIPTION- FIGURE 2

Ridgecrest Solar Power Project - Northern Unit

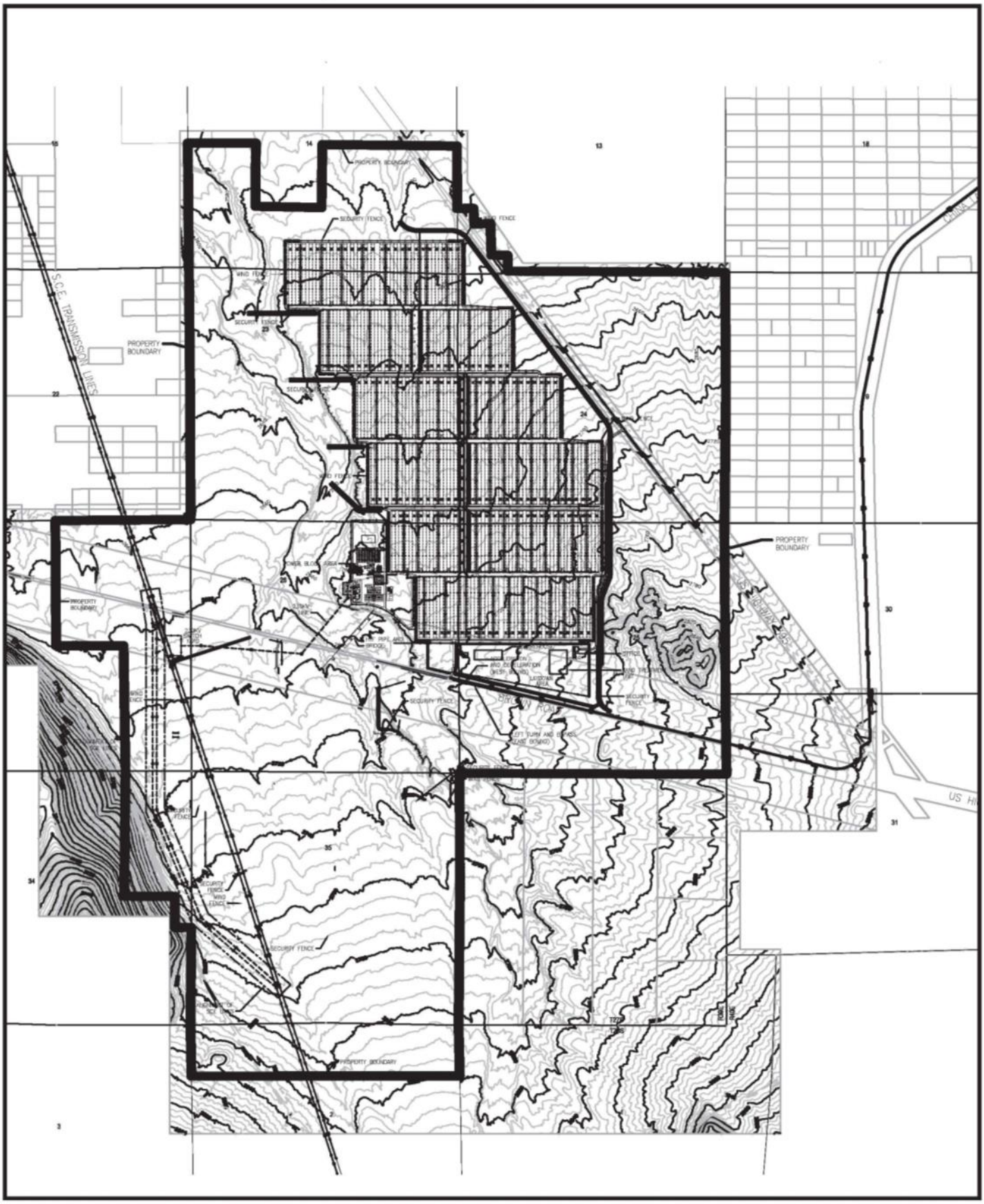

CALIFORNIA ENERGY COMMISSION - SITING, TRANSMISSION AND ENVIRONMENTAL PROTECTION DIVISION, MARCH 2010
Source: AECOM

PROJECT DESCRIPTION- FIGURE 3

Ridgecrest Solar Power Project - Southern Unit

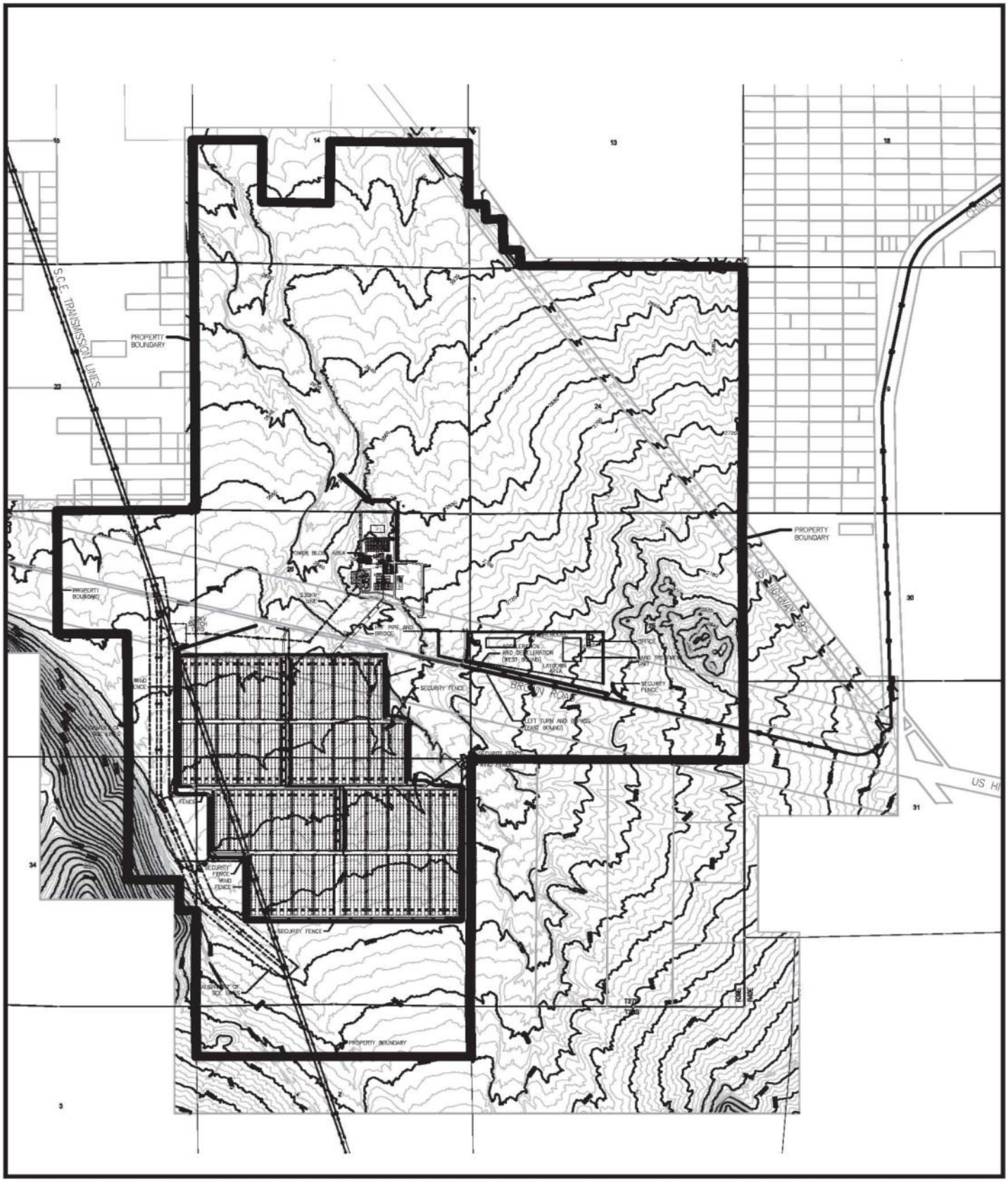

CALIFORNIA ENERGY COMMISSION - SITING, TRANSMISSION AND ENVIRONMENTAL PROTECTION DIVISION, MARCH 2010
Source: AECOM

PROJECT DESCRIPTION - FIGURE 4

Ridgecrest Solar Power Project - Original Proposed Project

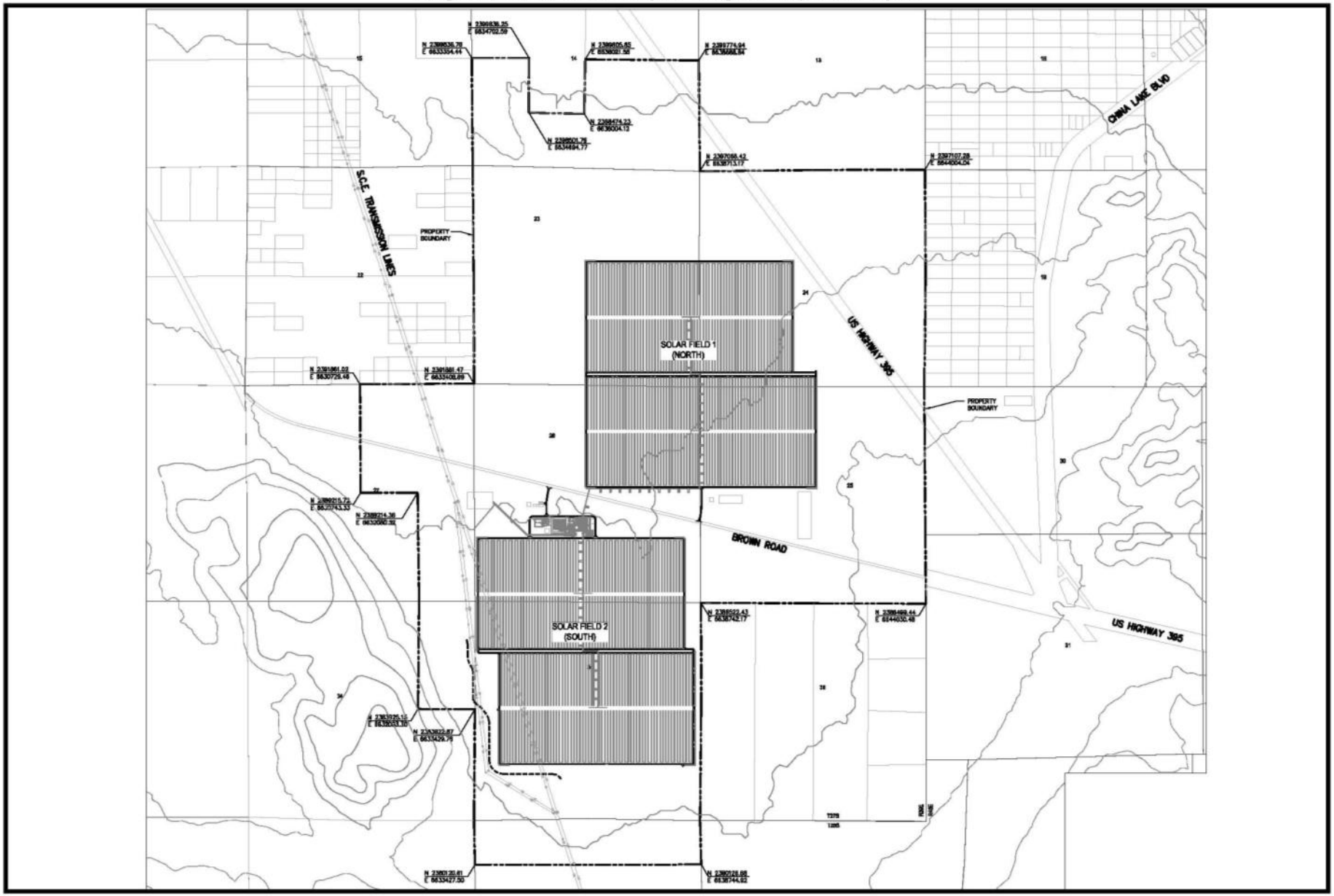

CALIFORNIA ENERGY COMMISSION - SITING, TRANSMISSION AND ENVIRONMENTAL PROTECTION DIVISION, MARCH 2010

SOURCE: AECOM

PROJECT DESCRIPTION - FIGURE 5

Ridgecrest Solar Power Project - Power Generation Process Diagram

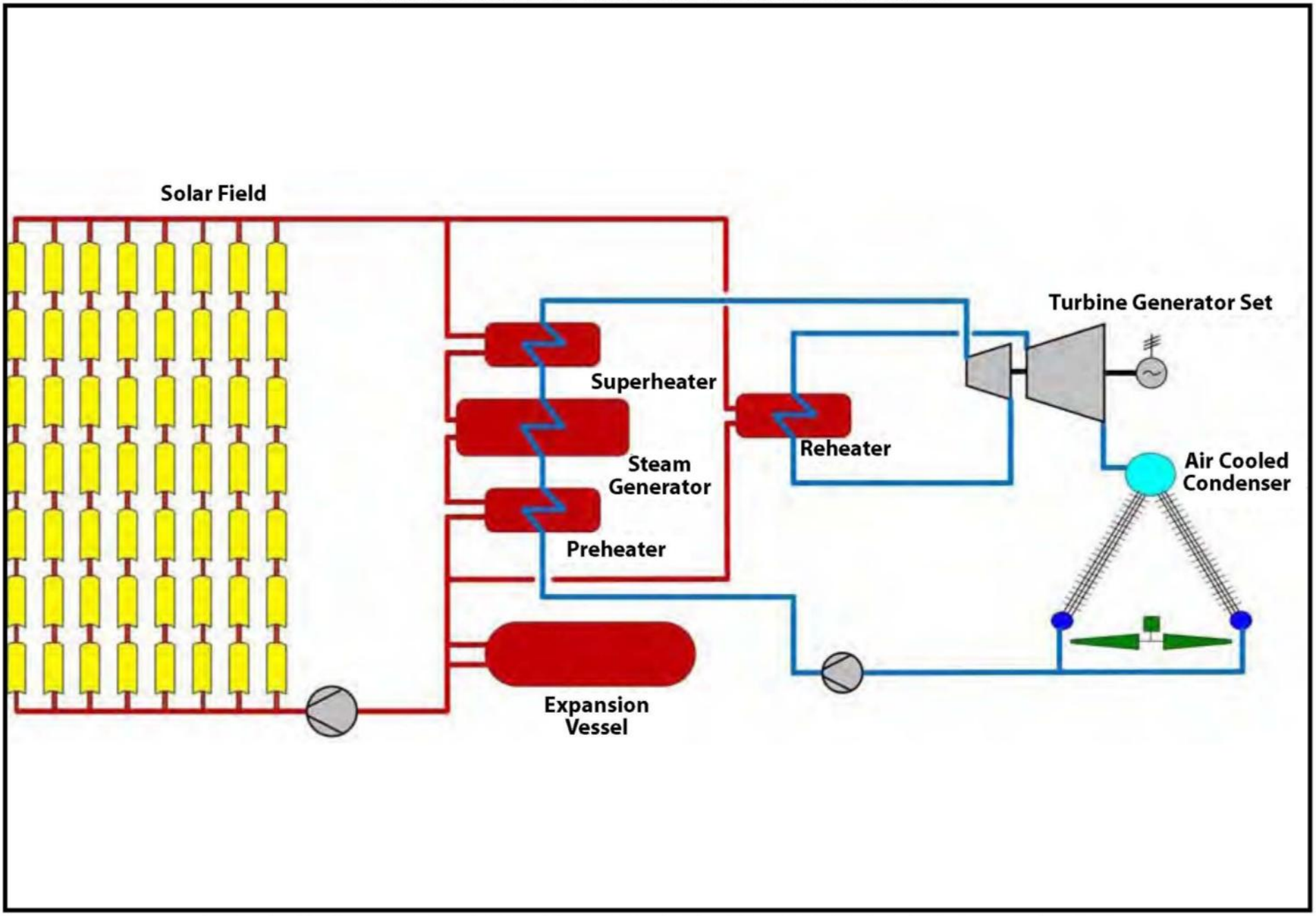

SOURCE: AFC, Sept. 2009, Page 2-6