Appendix E
2014 Air Quality Analysis

AIR QUALITY ANALYSIS
JIMENEZ PROJECT
IMPERIAL COUNTY APCD
MARCH 2013

Prepared For:

Granite Construction Company
38000 Monroe Street
Indio, CA 92203

Project No.: GCI-12-22091
Contact: Scott Taylor
Date: March 12, 2014

Alta Environmental
3777 Long Beach Boulevard, Annex Building
Long Beach, CA 90807 United States of America

ALTA ENVIRONMENTAL
3777 LONG BEACH BLVD, ANNEX BUILDING. LONG BEACH CA 90807
altaenviron.com o.562.495.5777 f.562.495.5877

Air Quality Impact Evaluation

Summary

A study of the emissions from the proposed Jimenez project anticipated emissions has been conducted to develop an analysis of emission significance. That information was compiled to anticipate measures needed to comply with air quality regulations, as well as any potential impacts. The proposed location is in the Jimenez Claims, which is located within the Imperial County Air Quality Control District. The evaluation assesses the air quality significance of the project and determines compliance with applicable California Environmental Quality Act (CEQA) as specified in Imperial County Air Pollution Control District's CEQA Air Quality Handbook Guidelines for the Implementation of the California Environmental Quality Act of 1970, as amended.

TABLE OF CONTENTS

PART I – AIR QUALITY ANALYSIS 1
A. Regional Air Quality 1
PART II – PROJECT DESCRIPTION 5
A. General Process Description 5
1. Asphalt Plant 5
2. Crumb Rubber Material Blending Plant 5
3. Ready Mix Concrete Production 6
B. Existing Conditions 6
C. Project Alternatives 7
D. Receptors 7
E. Air Quality Significant Thresholds 7
PART III – EMISSION SOURCES AND CONTROL MEASURES 8
A. Emission Sources 8
1. Hot Mix Asphalt 8
2. Ready Mix Concrete Plant 8
3. Crumb Rubber Material Blending System 9
4. Generators 10
B. Control Measures 10
1. Construction, Mining and Reclamation 10
2. Asphaltic Concrete Production 10
3. Ready Mix Concrete 11
4. Crumb Rubber Material Blending System 11
5. Aggregate Haul Roads 11
6. Electric Power 11
C. Cumulative Impacts 11
1. Legal Standard 12
2. Imperial County 2009 PM_{10} SIP 14
3. 2009 1997 8-Hour Ozone Modified AQMP 15
4. Analysis of Cumulative Impacts 18
D. Odor 19
E. Toxics 19
F. Estimate Emissions 20
PART IV – SIGNIFICANT OF IMPACTS 21

TABLE OF CONTENTS *(Continued)*

Attachments	–	**Descriptions**
"A"	–	Hot Mix Plant
"B"	–	Ready Mix Concrete
"C"	–	Crumb Rubber Plant
"D"	–	Diesel Engines
"E"	–	AP-42 Table 11.19.2-2
"F"	–	AP-42 Chapter 11.1 Hot Mix Asphalt Plants
"G"	–	HHV for Natural Gas Dry F-Factor
"H"	–	AP-42 Chapter 11.12-2
"I"	–	MSDS for Asphalt Oil
"J"	–	MSDS for Crumb Rubber

PART I – AIR QUALITY ANALYSIS

A. Regional Air Quality

The Federal Clean Air Act (CAA) requires that the State prepare a State Implementation Plan (SIP) to attain and maintain the National Ambient Air Quality Standards (NAAQS) set by the EPA. The California Clean Air Act (CCAA) divides the responsibility of attaining and maintaining the NAAQS between the CARB and the regional districts set by CARB. Both the State of California and the Federal government have established ambient air quality standards for six criteria air pollutants, including Ozone (O_3), CO, Nitrogen Dioxide (NO_2), Sulfur Dioxide (SO_2), particulate matter with a diameter of 10 microns or less and two and a half microns or less (PM_{10}, $PM_{2.5}$). The State of California also adopted standards for visibility reducing particles, sulfates, hydrogen sulfide and vinyl chloride. Refer to Table 1 for the Ambient Air Quality Standards. On a regional level, the Imperial County Air Pollution Control District (ICAPCD) works in conjunction with the California Air Resources Board and US EPA to implement an Air Quality Management Plan (AQMP) to meet the State and Federal requirements. Once the AQMP is developed and approved by CARB and the EPA, it becomes part of the SIP. The ICAPCD is charged with setting rules and regulations to reach the standards set forth in the AQMP.

Table 1: Ambient Air Quality Standards *

Pollutant	Averaging Time	California Standards [1] Concentration	National Standards [2] Concentration [3]
Ozone	Eight-Hour	0.070 ppm (137µg/m^3)	0.075 ppm (157 µg/m^3)[5]
	One-Hour	0.09 ppm (180 µg/m^3)	
Carbon Monoxide	Eight-Hour	9.0 ppm (10 mg/m^3)	9 ppm (10 mg/m^3)
	One-Hour	20 ppm (23 mg/m^3)	35 ppm (40 mg/m^3)
Nitrogen Dioxide	Annual Average	0.030 ppm	0.053 ppm (100 µg/m^3)
	One-Hour	0.18 ppm	0.100 ppm
Sulfur Dioxide	Annual Average		
	24-Hour	0.04 ppm (105 µg/m^3)	
	3-Hour		2.5 ppm
	One-Hour	0.25 ppm (655 µg/m^3)	0.075 ppm
Particulate Matter (PM_{10})	Annual Arithmetic Mean	20 µg/m^3	
	24-Hour	50 µg/m^3	(150 µg/m^3)
Particulate Matter – Fine ($PM_{2.5}$)	Annual Arithmetic Mean	12 µg/m^3	(12 µg/m^3)
	24-Hour		(35 µg/m^3)
Sulfates	24-Hour	25 µg/m^3	
Lead[6]	Calendar Quarter		(1.5 µg/m^3)
	30 Day Average	(1.5 µg/m^3)	
Hydrogen Sulfide	One-Hour	0.03 ppm (42 µg/m^3)	
Vinyl Chloride (Chloroethene)	24-Hour	0.010 ppm (26 µg/m^3)	
Visibility-Reducing Particles[6]	Eight-Hour (1,000 to 1,800 PST)	See Footnote 8	
mg/m^3 = milligrams per cubic meter		ppm = parts per million	µg/m^3 = micrograms per cubic meter

FOOTNOTES:

* CARB

1. California standards for ozone, carbon monoxide (except Lake Tahoe), sulfur dioxide (one-hour and 24-hour), nitrogen dioxide, suspended particulate matter - PM_{10}, $PM_{2.5}$ and visibility reducing particles are values that are not to be exceeded. All others are not to be equaled or exceeded. California ambient air quality standards are listed in the Table of Standards in Section 70200 of Title 17 of the California Code of Regulations (CCR).

2. National standards (other than ozone, particulate matter and those based on annual averages or annual arithmetic mean) are not to be exceeded more than once a year. The ozone standard is attained when the fourth highest eight-hour concentration in a year, averaged over three years, is equal to or less than the standard. For PM_{10}, the 24-hour standard is attained when the expected number of days per calendar year with a 24-hour average concentration above 150 $\mu g/m^3$ is equal to or less than one. For $PM_{2.5}$, the 24-hour standard is attained when 98 percent of the daily concentrations, averaged over three years, are equal to or less than the standard. Contact U.S. EPA for further clarification and current Federal policies.

3. Concentration expressed first in units in which it was promulgated. Equivalent units given in parentheses are based upon a reference temperature of 25°C and a reference pressure of 760 torr. Most measurements of air quality are to be corrected to a reference temperature of 25°C and a reference pressure of 760 torr: ppm in this table references to ppm by volume, or micromoles of pollutant per mole gas.

4. National Primary Standards: The level of air quality necessary, with an adequate margin of safety to protect the public health.

5. New Federal eight-hour ozone and fine particulate matter standards were promulgated by EPA on July 18, 1997. Contact EAP for further clarification and current Federal policies.

6. The ARB has identified lead and vinyl chloride as 'toxic air contaminants' with no threshold level of exposure for adverse health effects determined.

Table 2 summarizes the attainment status as of 2011 in Imperial County for the criteria pollutants.

Table 2: Attainment Status of Criteria Pollutants

Pollutant	State	Federal
O_3 (One-Hour)	Moderate Non-Attainment	Not Applicable
O_3 (Eight-Hour)	Not Applicable	Marginal Non-Attainment
PM_{10}	Non-Attainment	Non-Attainment
$PM_{2.5}$	Unclassified	Non-Attainment
CO	Attainment	Attainment
NO_2	Attainment	Unclassifiable/Attainment
SO_x	Attainment	Attainment
Lead	Attainment	Attainment
Visibility Reducing Particles, Sulfates, Hydrogen Sulfide and Vinyl Chloride	Unclassified	Unclassified

PART II – PROJECT DESCRIPTION

A. General Process Description

Purpose and Scope

The Jimenez Claims Project will operate a hot mix asphalt plant, ready mix concrete plant and crumb rubber plant. Aggregate material from the existing aggregate plant located at the Jimenez site will be used in the production of asphalt and/or concrete. The finished materials would be trucked off the property directly to construction projects or to supply asphalt and concrete operations in the El Centro area. Each process is further described below.

1. Asphalt Plant

The facility will produce State of California Standard Specification Asphalt Concrete mixes which typically consist of ¾", ½", 3/8": asphalt concrete mix.

In general, coarse material (¾" and ½" mixes) will comprise approximately 70% of total plant production with the 3/8" mix comprising approximately 20% and fine mix making up the remainder.

Raw aggregate is fed into a rotary dryer from a cold feed system. The material is heated to specification temperature to remove moisture, and then mixed with liquid asphalt. The asphaltic concrete is discharged into a drag slat conveyor. The asphaltic concrete is then fed into a hot asphalt silo. The silo will store the asphaltic concrete until it is ready to be loaded into waiting trucks.

Recycled crumb rubber may be added to the hot mix asphalt to produce rubberized asphalt.

2. Crumb Rubber Material Blending Plant

Recycled crumb rubber material is loaded into the crumb rubber bin and then into receiving hopper where it is fed through a vane feeder. The receiving hopper bin is equipped with a load cell to provide the vane feeder with a uniform flow of material. The vane feeder meters the crumb rubber to a screw conveyor which feeds into the mixing tank. Crumb rubber transferred from storage bin to mixing tank is a closed system transfer.

Virgin asphalt oil is pumped to the mixing tank and blended with the crumb rubber material. Extender oil, which is maintained under ambient temperature, is added to meet the desired viscosity of the crumb rubber/asphalt oil mix. The crumb rubber/asphalt oil mix is then pumped to the reaction and holding tank. Vapor from this tank is vented to a condenser. The mix is then pumped to the asphalt oil weight bucket of an asphalt plant.

Please refer to Attachment "I" for Material Safety Data Sheet (MSDS) of asphalt oil and Attachment "J" for natural MSDS Crumb Rubber.

3. Ready Mix Concrete Production

Sand and gravel is delivered to a series of receiving hoppers. Each receiving hopper feeds a belt conveyor that discharge into an enclosed storage bin. The storage bins will feed a weigh hopper which discharges aggregate into waiting transit mix trucks.

Cement and fly ash will be delivered to storage silos by trucks which will feed the materials pneumatically. The silos will feed cement and fly ash into a weighing and batch hopper via screw conveyors.

The transit mix truck is fed simultaneously by the aggregate and cement weigh hoppers. Control of material feed is automatic. Water is added to the transit mix truck and the concrete product is mixed en route to the construction site.

B. Existing Conditions

The proposed project site is located in the Imperial County APCD. The Jimenez site has been used for many years as a base of operations to supply aggregate, asphalt ready mix and other construction materials to various Granite projects. The mining and processing of aggregate material and associated activities currently exist at this site.

The site requires little to no preparation to set-up the proposed operations. As a result, there are no site or construction emissions evaluated with this analysis.

C. Project Alternatives

Alternatives scenarios for the proposed project were conducted for the preparation of the Environmental Assessment document for the Jimenez Pit, dated April 19, 1996. Please refer to the Environmental Assessment document for the project alternative analysis.

D. Receptors

The nearest occupied residences are located in Ocotillo, some 4 miles to the southeast. There are no schools, hospitals or residences within one mile of the site.

E. Air Quality Significance Thresholds

To determine whether or not air quality impacts from the proposed projects are significant, emissions from the proposed projects are evaluated and compared to the significance thresholds for criteria pollutants during the operation phases. Existing emissions from current operations at the Jimenez site are not included in this analysis. Table 3 lists daily significance threshold for the operational phase. If impacts equal or exceed any of the following criteria, the proposed project will be considered significant under the Imperial County's Air Quality Handbook Guidelines.

Table 3: Air Quality Significance Thresholds[1]

Criteria Pollutants Daily and Quarterly Emission Thresholds	
Pollutant	**Operation**
NO_x	55 lbs/day
VOC (ROG)	55 lbs/day
PM_{10}	150 lbs/day
SO_x	150 lbs/day
CO	550 lbs/day
Lead	3 lbs/day

Odor Screening Distances	
Asphalt Plant	1 Mile

[1] Reference Imperial County Air Pollution Control District CEQA Air Quality Handbook.

PART III – EMISSION SOURCES AND CONTROL MEASURES

The emissions from all the project activities including hot mix asphalt, ready mix concrete, and asphalt processing and hauling are evaluated below.

A. Emission Sources

1. Hot Mix Asphalt

Hot mix asphalt production includes the use of belt conveyors, storage hoppers, dryer, hot oil heater and storage silos. See Figure 1 in Attachment "A" for the layout of a standard hot mix asphalt plant. The maximum production for the hot mix asphalt plant is 500 Tons Per Hour (TPH) and the maximum annual production is 675,000 tons.

Based on the projected production of the hot mix plant, estimates of the emissions from the proposed plant have been developed. The summary of the emission estimates can be found in Table 4 and the detailed analysis can be found in Attachment "A".

The emissions factors used in the emission estimate calculations were taken from the EPA AP-42 Chapter 11.1 Hot Mix Asphalt Plants, Source Test Data, and from EPA AP-42 Table 11.19.2-2 (Refer to Attachment "E" and "F"). PM_{10} factors are based on the aggregates surface being saturated with moisture in order to prevent excessive visible emissions.

2. Ready Mix Concrete Plant

The concrete plant includes belt conveyors, storage hoppers, weigh hoppers, and cement and fly ash loading. See Figure 2 in Attachment "B" for the layout of a standard ready mix concrete plant. The maximum production rate is 350 cubic yards per hour with a typical annual production of 300,000 cubic yards.

Aggregate material is fed from the aggregate stockpiles and sent to the concrete plant via a front-end loader. Aggregate, cement, and water are separately weighed and blended in a mixer drum. Dust generated within the plant is drawn through a baghouse system and returned to the concrete product. The concrete mix is deposited into mixer trucks and for delivery to the end-user. Cement is transferred to the site with bulk delivery trucks. In addition to these materials, the concrete plant may also require fly ash and other additives dependent on customer requirements and agency specifications. Both the fly ash and cement are stored in storage silos with bin vents.

Based on the projected production of the ready mix concrete plant, estimates of the emissions from the proposed plant have been developed. The estimates can be found in Table 4.

Emission estimates for the proposed facility are based on AP-42 Table 11.19.2-2 emission factors for crushed stone processing operations (See Attachment "E") and AP-42 Table 11.12-2 emissions factors for concrete batching (See Attachment "H").

3. Crumb Rubber Material Blending System

The portable recycled crumb rubber material is loaded into the crumb rubber bin and then into receiving hopper where it is fed through a vane feeder. The only emission points from the crumb rubber blending operation is from the receiving hoppers and conveyors, where crumb rubber is loaded into the hopper and conveyed to the blending tank. The vane feeder meters the crumb rubber to a screw conveyor which feeds into the mixing tank. Crumb rubber transferred from storage bin to mixing tank is a closed system transfer. See Figure 3 in Attachment "C".

The plant includes 4.9 mmBTU/hour low NO_x thermal oil heater fired on natural gas. Per Imperial County APCD Rule 400.2 the heat input rating is below 5 million BTU/hour and qualifies for a permit exemption.

Based on the projected production of the crumb rubber material blending plant, estimates of the emissions from the proposed plant have been developed. The estimates can be found in Table 4.

4. Generators

Electricity will be provided by one or more portable generators. Generators utilized on-site will be permitted with Imperial County APCD.

Two generators are evaluated for the facility. Emissions estimates for the generators are based on Tier IV emission standards. The emissions from the engines are evaluated in Attachment "D".

The emissions factors used in the emission estimate calculations were taken from the US EPA Off-Road Compression-Ignition Diesel Engine Standard.

Process	Engine HP
Ready Mix Concrete/Crumb Rubber	400 HP
Hot Mix Asphalt Plant	2,000 HP

B. Control Measures

1. Construction, Mining and Reclamation

There will be no site preparation and grading for the construction of the operation portion of the facility due to the preexisting site conditions. All grading, land leveling and mining activities will control fugitive dust by the application of water.

2. Asphaltic Concrete Production

The feed material for the hot mix asphalt plant will be transported to the site. This material will have been processed through various screening and washing devices which will assure that the material entering the hot mix asphalt plant will not show visible emissions.

A baghouse type dust collector will be installed on the drum to meet BACT requirement and will collect emissions from the dryer burner and various locations throughout the facility.

The dryer in the plant will be fired by natural gas. Hot asphalt storage silos and loadout will be vented to control blue smoke.

3. Ready Mix Concrete

The moisture from the aggregate processing activities will assure that the material entering the ready mix operation will show no visible emissions. The storage piles will be adequately watered as to prevent visible emissions.

The truck loading station will be served by flexible shrouding, water sprinkler system, and baghouse to prevent visible emissions.

4. Crumb Rubber Material Blending System

The crumb rubber plant is equipped with the state-of-the art control equipment to minimize emission from the process. The process uses condensers on the tanks. Although the emissions are negligible any potential emission are controlled by the condensers. Additionally, the burner used for the heat exchanger is a low-NO_x burner and will utilize natural gas.

5. Aggregate Haul Trucks

The material transported on-site and off-site in trucks will comply with the applicable freeboard requirements.

6. Electric Power

The portable generators utilized on-site will meet the emission control requirements for a Tier IV engine. The largest generator for the hot mix asphalt plant is estimated to be 2,000 HP. This unit will be equipped with an emission control device, like an SER, to limit emissions.

C. Cumulative Impacts[1]

1. Legal Standard

A "cumulative impact" is defined in NEPA Regulations as "the incremental impact of the action when added to other past, present, and reasonably foreseeable future actions ..." (40 C.F.R. § 1508.7.) Regulations of a related state law, the California Environmental Quality Act (Public Resources Code §§ 21000-21189.3) (CEQA) similarly define "cumulative impact" as "the incremental impact of the project when added to other closely related past, present, and reasonably foreseeable future projects." (CEQA Guidelines § 15355, subd. (b).) "Cumulative impacts result when the effects of an action are added to or interact with other effects in a particular place and within a particular time." (U.S. EPA, Consideration of Cumulative Impacts in EPA Review of NEPA Documents (1999).) The Council on Environmental Quality (CEQ) recommends analyzing cumulative effects "in terms of the specific resource, ecosystem, and human community being affected." (CEQ, Considering Cumulative Effects Under the National Environmental Policy Act, p. 8 (1997) (hereinafter CEQ 1997).) According to the CEQA Guidelines, a project would have a significant effect on the environment if it would cause "a cumulatively considerable net increase of any criteria pollutant for which the project region is non-attainment under an applicable federal or state ambient air quality standard (including releasing emissions which exceed quantitative thresholds for ozone precursors)". (CEQA Guidelines, Appendix G, sample question III(c).) Imperial County is presently classified as non-attainment with respect to particulate matter and ozone.

Often the description of current conditions will inherently include the effects of past actions and serve as a more accurate and useful starting point for a cumulative effects analysis than an attempt to separately discern the effects of individual past actions.

> Agencies are not required to list or analyze the effects of individual past actions unless such information is necessary to describe the cumulative effect of all past actions combined. Agencies retain substantial discretion as to the extent of such inquiry and the appropriate level of explanation. [citation] Generally, agencies can conduct an adequate cumulative effects analysis by focusing on the current aggregate effects of past actions without delving into the historical details of individual past actions.

[1] Cumulative Impacts Analysis Prepared by Mark Harrison of Harrison Temblador & Johnson

(CEQ, Guidance on the Consideration of Past Actions in Cumulative Effects Analysis, p. 2 (2005) (hereinafter CEQ 2005).). "CEQ regulations do not require the consideration of the individual effects of all past actions to determine the present effects of past actions." (*Id*. at 3.) This is particularly useful in the consideration of air quality, since relevant air quality standards are concerned with the levels of various constituents (or "criteria pollutants") in the ambient air. (*See* 42 U.S.C. §§ 7408, 7409 [National Ambient Air Quality Standards]; *see also* CEQ 1997, at 41-42 ["the National Ambient Air Quality Standards (NAAQS) inventory represents the universe of present actions to determine whether new emission sources will exceed air quality standards."].)

CEQ suggests using the applicable air basin for purposes of scoping a cumulative analysis of air quality impacts. (CEQ 1997 at 15.) In the case of this Project, the air basin is under the jurisdiction of the Imperial County Air Pollution Control District (ICAPCD). Local air pollution control districts are generally required to achieve and maintain both state and federal ambient air quality standards through the adoption and enforcement of rules and regulations. (Health & Safety Code § 40001.) ICAPCD has adopted plans and regulations to achieve and maintain compliance with National Ambient Air Quality Standards (NAAQS) and the stricter California Ambient Air Quality Standards (CAAQS). Table 2 of this Air Quality Analysis summarizes the attainment status of Imperial County as of 2011. The County presently has nonattainment status for four NAAQS: PM_{10}, 2006 $PM_{2.5}$, 1997 8-hour ozone (moderate with clean data) and 2008 8-hour (marginal); and two CAAQS: 1-hour ozone and PM_{10}.

The following subsections describe the air quality plans presently maintained by the ICAPCD. In the preparation of these plans, ICAPCD has compiled baseline emissions inventories which aggregate pollutant levels in the ambient air. Emissions from the Jimenez operation, which has been in operation since 1996, are included in the emissions inventories described in the following plans. These plans also identify the major sources of criteria pollutant emissions, and specify control measures to curb such emissions as needed to attain and maintain conformity with state and federal ambient air quality standards.

2. Imperial County 2009 PM_{10} SIP

On August 11, 2004, the U.S. EPA classified the Imperial Valley as a "serious" nonattainment area for PM_{10}. (69 Fed. Reg. 154, 48792.[2]) On August 11, 2009, the ICAPCD adopted the Imperial County 2009 PM_{10} SIP ("PM_{10} SIP"). The purpose of this SIP is to implement, maintain and enforce state and federal clean air standards for particulate matter within the county. (42 U.S.C. § 7410(a)(2).) The PM_{10} SIP includes an inventory of existing natural and anthropogenic sources of emissions, provides an overview of pollution control strategies, including a determination of Best Available Control Measures (BACM), and concludes by demonstrating attainment of the PM_{10} NAAQS. (PM_{10} SIP at 1-6–1-7.)

The Imperial County 2009 PM_{10} SIP identifies seventeen categories of PM_{10} emissions, including on-road mobile sources, "other" mobile sources, windblown dust (including unpaved roads), construction, industrial processes (including mineral processes), and other natural and manmade emissions sources. (*Id.* at Table 3.3, 3-4.) Disturbance of soils by wind and human activity and transport of PM_{10} from Mexico are the two largest sources of PM_{10} emissions in Imperial County. (*Id.* at 2-1.) More than half of all PM_{10} emissions are generated by fugitive windblown dust, as much of the county is dry, barren desert. (*Ibid.*)

The PM_{10} emissions inventory calculates a total annual average of 293 tons of emissions per day for the 2005 baseline, with windblown dust from all sources accounting for approximately 73% of such emissions. (*Id.* at Table 3.3, 3-4.) After excluding windblown emissions, only tilling and entrained dust from unpaved roads are considered "significant" sources of PM_{10}, which are defined as sources that contributed more than a "critical fractional contribution" of emissions during events when the NAAQS was exceeded (2.9% on December 21 and 2% on December 25, 2006). (*Id.* at 3-8–3-9.) Even though BACM is not specifically required for sources that are not significant, District rules address emissions from source categories that are responsible for more than 1 ton per day (tpd) of emissions. (*Id.* at 3-9.) These categories include mineral processing, construction and waste burning, among other categories. (*Id.* at Table 3-6, 3-8.) Additionally, an individual source is considered "major" if it has the potential to contribute 70 tons or more of PM_{10} in one year. (*Id.* at 3-9.) The PM_{10} SIP identifies one such major stationary source, a gypsum manufacturer, which has implemented Best Available Control Technology (BACT) for its major emissions sources. (*Id.* at 3-10.)

[2] The U.S. EPA has also classified Imperial County as a nonattainment area for the 2006 $PM_{2.5}$ NAAQS. The District is in the process of preparing a $PM_{2.5}$ SIP, which will be submitted to the EPA later this year.

The PM_{10} SIP concludes with a finding that, after excluding emissions from high wind exceptional events, ambient air quality on every monitored day in 2006-2008 would have been in attainment of the 24-hour PM_{10} NAAQS but for international emissions from Mexico. (*Id.* at 5-9.) However, federal rules prevent the county from requesting attainment redesignation as long as international emissions continue to cause NAAQS violations. (*Id.* at 5-10; 72 Fed. Reg. 237, 70226.)

3. 2009 1997 8-Hour Ozone Modified AQMP

On April 30, 2004, the U.S. EPA classified Imperial County as a "Marginal" non-attainment area for the 8-hour ozone NAAQS promulgated by U.S. EPA on July 18, 1997 (the 1997 8-Hour Ozone NAAQS). Subsequently, the EPA found that the county had failed to meet attainment by the "Marginal" deadline of June 15, 2007, and the county was reclassified as a "Moderate" nonattainment area for the 1997 8-hour ozone NAAQS. Imperial County was required to demonstrate attainment of the NAAQS as expeditiously as possible, but no later than June 15, 2010. Imperial County demonstrated attainment of the 1997 8-hour ozone NAAQS for three years, 2006, 2007 and 2008, and on December 3, 2009 the US EPA issued a final ruling determining that the Imperial County attained the 1997 8-hour ozone standard. (AQMP at 2.) This determination effectively suspended the requirement for the state to submit an attainment demonstration, a reasonable further progress plan, contingency measures and other planning requirements for so long as Imperial County continues to attain the 1997 8-hour ozone standard. (74 Fed. Reg. 231, 63309.) However, Imperial County was still required to submit a "Modified" Air Quality Management Plan for the 1997 8-Hour Ozone NAAQS for U.S. EPA approval, which the ICAPCD prepared as the 2009 1997 8-Hour Ozone Modified AQMP (Adopted July 13, 2010) (the "AQMP").

The AQMP is a comprehensive planning document intended to provide guidance to the ICAPCD, Imperial County, and other local agencies in maintaining attainment of the 1997 8-Hour Ozone NAAQS. (AQMP at 3.) U.S. EPA requires the AQMP to compile a growth emission inventory for NO_x and VOC, implement Reasonably Available Control Technology (RACT), and impose NO_x and VOC emissions offset of 1.15:1 for major source permits. (*Ibid*.) The District is also required to adopt all feasible measures to reduce two major precursors to ozone formation, reactive organic compounds (ROG) and oxides of nitrogen (NO_x) pursuant to the California Clean Air Act. (*Id.* at 14.) ICAPCD must use the more restrictive CAAQS when setting up new source review limits to achieve no net increase in criteria pollutant emissions. (*Ibid*.)

In cooperation with CARB, the ICAPCD develops a complete emissions inventory every year for all sources in Imperial County. The Imperial County 2009 Ozone AQMP used a base year of 2002, which U.S. EPA designated as the baseline for measuring progress toward the 8-hour ozone NAAQS. (*Id*. at 22.) The emissions inventory focused on ROG and NO_x emissions, which were aggregated in the inventory of pollutants. (*Ibid*.) These emissions were grouped from three major categories of emissions sources, stationary sources (including industrial processes such as boilers), area-wide sources (including solvent evaporation), and mobile sources (including on-road an off-road vehicles). (*Id*. at 23.) The total 2002 emissions inventory was based on the summer planning inventory and included 37.32 tons per day (tpd) of ROG and 37.43 tpd of NO_x. (*Id*. at Table 4-1, 26.) This inventory included all active sources of emissions in the county in 2002, including the Jimenez operation, which first began operations in 1996. "The 2002 emissions inventory . . . provides an up-to-date, comprehensive base inventory that can be used to forecast future year emissions." (*Id*. at 44.)

NAAQS and CAAQS are maintained by the application of control measures, which can be divided into three categories: (i) stationary source control measures imposed directly by the ICAPCD, (ii) regional transportation control measures developed by the Southern California Association of Governments (SCAG), and (iii) the state strategy adopted by CARB. (*Id*. at 29.) Stationary source control measures include Rule 424 (Architectural Coatings), Rule 217 (Large Confined Animal Facilities), and Rule 400.1 (Stationary Gas Turbines). (*Id.* at 31-32.) Rule 400.2 applies RACT to any boiler unit with a rated heat input capacity of 5 million British thermal units per hour (MMBtu/hr) or more. (*Id.* at 33.) The District also applies a New Source Rule (NSR, Rule 207), which ensures that new or modified equipment and facilities do not significantly degrade air quality as measured by the NAAQS and more restrictive CAAQS. (*Id*. at 35.) Under the NSR, BACT is "required for all new or modified emissions units which have a potential to emit 25 pounds per day or more of any non-attainment pollutants." (*Ibid*.)

Mobile source emissions are addressed by transportation control measures and the state plan. Regional transportation control measures are developed as part of the Metropolitan Transportation Plan (MTP) for the SCAG Region, which includes Los Angeles, Orange, Ventura, Riverside, San Bernardino and Imperial Counties. (*Id*. at 36.) SCAG is required to ensure that the transportation plan for the region will conform to state air quality plans. (*Ibid.*) Transportation Control Measures (TCMs) include measures to reduce Vehicle Mile Travelled (VMT) through carpool incentives and investments in transit, among other priorities. (*Id*. at 37.) Through the application of its CEQA Air Quality Handbook, ICAPCD applies similar measures to reduce emissions from mobile sources by lowering VMT. (*Id*. at 38.) The state strategy includes measures implemented by CARB and U.S. EPA, as well as incentive programs implemented by local air districts, such as the Carl Moyer Program to reduce heavy-duty emissions through the retirement of older diesel engines used in heavy duty vehicles. (*Id.* at 40-41.)

The AQMP provides an emissions forecast by applying emission growth and control estimates to the baseline emissions inventory. The forecast inventories "take into account projected socioeconomic growth and the emission reductions ICAPCD rules as adopted are expected to generate." (*Id.* at 44.). The forecast was modeled using the California Emissions Forecasting System (CEFS), a computer model maintained by CARB which uses pollutant-specific algorithms to estimate future emissions. (*Ibid*.) NO_x and ROG emissions were projected to decrease significantly between 2002 and 2009, by 14% and 15%, respectively. (*Id*. at 49.) By demonstrating attainment of the 1997 8-hour ozone NAAQS in 2009, Imperial County was not required to demonstrate attainment of the NAAQS in future years in the AQMP. (*Id.* at 53; 74 Fed. Reg. 231, 63309.)

4. Analysis of Cumulative Impacts

As instructed by CEC Guidance, emissions from the existing Jimenez operation may be included among total background ambient air conditions; it is not necessary to separately discern these or any other individual past or current contributions in the aggregate calculation of ambient conditions. Past and present emissions of PM_{10} and ozone precursors were aggregated in the emissions inventories for the basin in the PM_{10} SIP and the AQMP, respectively.

Existing activities associated with the Jimenez operation were included among the basin-wide mineral processing and mobile-source emissions sources aggregated in the emissions inventory of the PM_{10} SIP and the AQMP, which included all sources of emissions in operation in base year 2005 and 2002, respectively. The Jimenez operation was not identified as a major source of PM_{10}, ROG or NO_x emissions in either plan. Nevertheless, both existing and Project sources are required to comply with all ICAPCD Rules and Permitting Procedures.

The Project incorporates various emissions control measures discussed in the foregoing subsection B, including dust reduction measures, a baghouse dust collector, a low NO_x burner, and other measures. Moreover, the Project does not propose any increase in vehicle trips or production capacity. Therefore, because the Project complies with District rules developed to attain and maintain compliance with NAAQS and CAAQS, and because existing operations are accounted for in the SIP, the incremental contributions of Project emissions to ambient levels of pollutants in the air basin are not considered cumulatively considerable.

D. Odor

The Imperial County CEQA Air Quality Handbook has established significance thresholds for potential odor sources such as Hot Mix Asphalt Plants and distances for which a detailed evaluation must be performed. If a sensitive receptor, such as hospitals, daycare centers, and schools are less than one mile, a more detailed study will be required. Since this facility is located more than one mile away from any sensitive receptor odor should not be a significant impact. The nearest occupied residences are located approximately 4 miles to the southeast.

E. Toxics

Toxic emissions for hot mix asphalt plants have been studied and analyzed by the Imperial County APCD for the purposes of issuing permits and determining Health Risk Assessments (HRA). Granite Construction owns two identical asphalt plants. One of the two plants was permitted at Granite's El Centro facility. An Imperial County APCD permit has been issued for that site. As a part of that evaluation a complete HRA was performed on the plant which detailed toxic emissions. The result of the HRA was less than 1 in 1 million for the Maximum Individual Cancer Risk and less than 1 for both the Acute and Chronic Hazard Index.

The asphalt plants equipment and toxic emissions profile would be very similar between the El Centro site and the Jimenez site. One big difference is that the Jimenez site is located much further away from residential and worker receptors than the El Centro location. Due to the two asphalt plants being identical, and the increased distance to all receptors, an HRA for the Jimenez site would produce similar results to the El Centro site.

F. Estimate Emissions

Table 4: Operational Emissions

Emission Source	**CO**	**VOC**	**NO_x**	**SO_x**	**PM_{10}**
	(lbs/day)	**(lbs/day)**	**(lbs/day)**	**(lbs/day)**	**(lbs/day)**
Operation of Jimenez Facility					
Asphalt Plant	131.07	37.09	45.06	15.32	92.39
Ready Mix Concrete Plant	--	--	--	--	3.71
Crumb Rubber Plant	11.59	0.21	1.43	0.02	0.28
Operation of Jimenez Facility – TOTALS	142.66	37.30	46.49	15.34	96.38
Power Generation	88.36	8.15	7.54	0.26	1.09
Total Emissions	231.02	45.45	54.03	15.6	97.47
ICAPCD Significance Threshold Level	550	55	55	150	150
Significant?	No	No	No	No	No

PART IV – SIGNIFICANCE OF IMPACTS

Based on the project analysis provided, the proposed project emissions have been demonstrated to be below significance for CO, VOC, NO_x, PM_{10} and SO_x. The analysis considers an operating scenario which assumes that all activities are operating simultaneously. It is likely that only a portion of the various equipment will be operating at the site at any one time. As discussed in the analysis, the project has implemented mitigation measures to all aspects of the operation to minimize emissions. The unique benefit this project presents is the ability to locate operations at an aggregate source which reduces the emission for the lifecycle of the products produced at the site.

ATTACHMENT "A"

HOT MIX PLANT

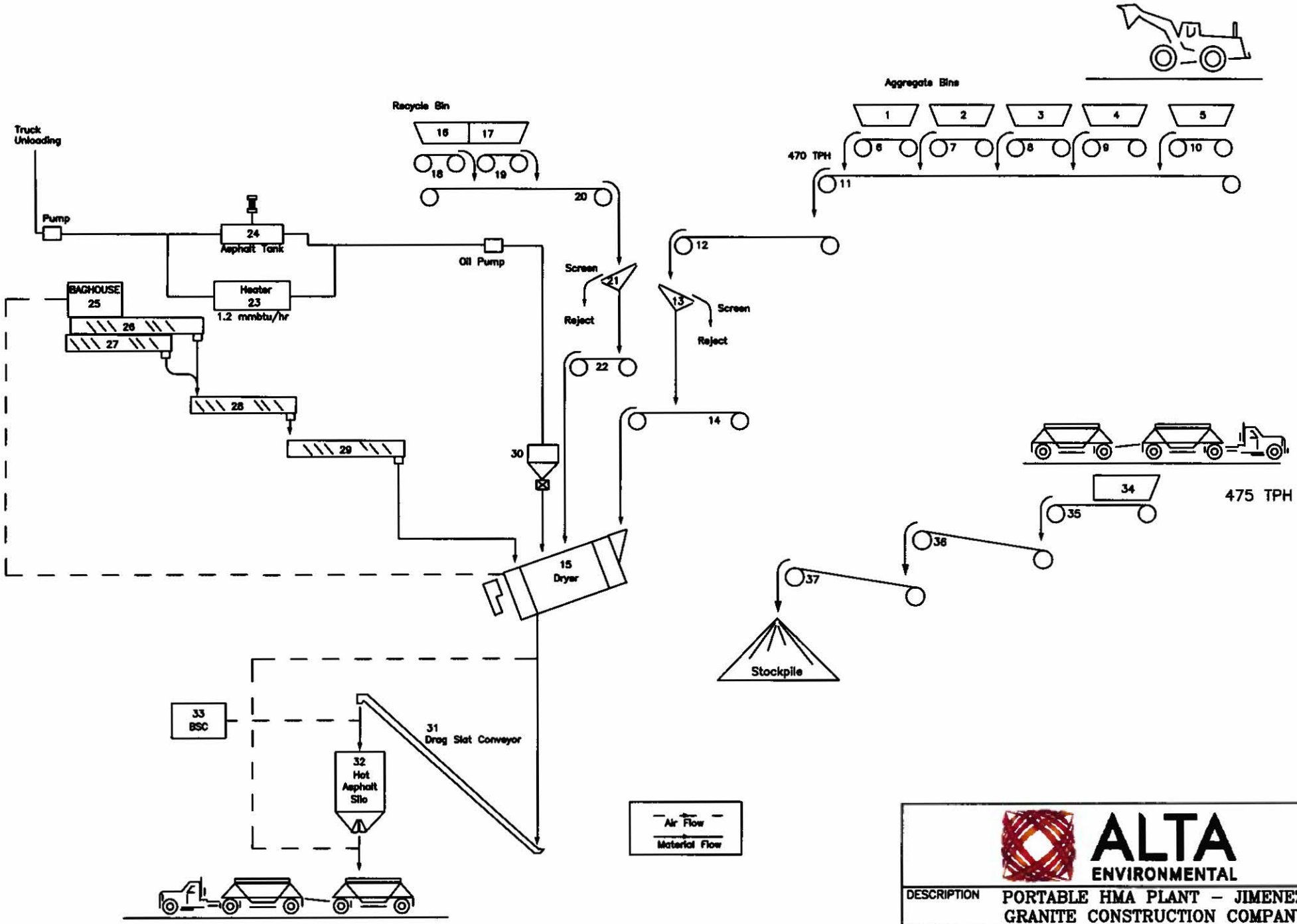

ALTA ENVIRONMENTAL

DESCRIPTION	PORTABLE HMA PLANT – JIMENEZ GRANITE CONSTRUCTION COMPANY
LOCATION	134 SOUTH 5TH STREET EL CENTRO, CA 92243

JOB NO.	DATE	FIGURE NO.
GCI-12-22091	1/29/13	1

ALTA ENVIRONMENTAL

Emissions Estimates for Cold Feed

	Tons/Hour	Tons/Day	Tons/Year
Rock, Sand, RAP	470	4,230	634,500
Liquid Asphalt	30	270	40,500
Total	500	4,500	675,000

Emission Point	Description	Throughput (tons/hour)	×	PM_{10} Emissions Factor (lbs/ton)	=	PM_{10} (lbs/hour)
Unloading						
	Truck to Aggregate Cold Feed Hopper 33	470		4.60E-05		0.0216
	Belt Feeders 34 to Belt Conveyor 35	470		4.60E-05		0.0216
	Belt Conveyor 35 to Stacking Conveyor 36	470		4.60E-05		0.0216
	Stacking Conveyor 36 to Stockpile	470		4.60E-05		0.0216
Cold Feed						
	Loader to Aggregate Cold Feed Hopper 1-5	470		4.60E-05		0.0216
	Belt Feeders 6-10 to Collecting Conveyor 11	470		4.60E-05		0.0216
	Collecting Conveyor 11 to Screen 12	470		4.60E-05		0.0216
	Screen 12	470		0.00074		0.3478
	Screen 12 to Belt Conveyor 13	470		4.60E-05		0.0216
	Belt Conveyor 13 to Dryer 14	470		4.60E-05		0.0216
RAP System						
	End Loader to Hopper 15-16	470		--		--
	Belt Feeders 17-18 to Belt Conveyor 19	470		--		--
	Belt Conveyor 19 to Screen 20	470		--		--
	Screen 20	470		--		---
	Screen 20 to Belt Conveyor 21	470		--		--
	Belt Conveyor 21 to Dryer	470		--		--
				Total PM_{10} (lbs/hour)		0.54
				Aggregate Throughput (tons/hour)	÷	470
				Plant PM_{10} Emission Rate (lbs/ton)		0.0012

Aggregate Throughput		×	PM_{10} Emissions Rate (lbs/ton)	=	PM_{10} Emissions	
470	tons/hour		0.0012		0.54	lbs/hour
4,230	tons/day		0.0012		4.88	lbs/day
675,000	tons/year		0.0012		732.21	lbs/year

ALTA ENVIRONMENTAL

Emissions Estimates for the Asphalt Dryer

1. NO_x Emissions for the Asphalt Dryer

The NO_x mass emissions can be calculated using the Dry F-Factor. The following equation can be found in South Coast AQMD Rule 2012 .

$$E_k = PPMV_c \times [20.9 / (20.9 - b)] \times 1.195 \times 10^{E-7} \times \sum_{J=1}^{r} (F_{dj} \times {}_{dj} \times V_j)$$

Where:

E_k	=	lb Pollutant
dj	=	Fuel usage Natural Gas mmcf
b	=	3% O_2 South Coast AQMD Default Value
$PPMV_c$	=	Concentration of Dryer, 33 NO_x PPMV (Based on Source Testing)
Fdj	=	8710, Dry F Factor for Natural Gas, dscf/mmBTU/mmcf (Attachment "G")
Vj	=	1050, High Heat Value of Natural Gas mmBTU/mmcf (Attachment "G")
Ek/dj	=	42.11 lbs/mmcf

2. CO Emissions for the Asphalt Dryer

The CO mass emissions can be calculated usingthe Dry F-Factor. The following equation can be found in South Coast AQMD Rule 2012 with an adjustment in the correction factor for CO.

$$E_k = ppmv_c \times [20.9 / (20.9 - b)] \times 7.267 \times 10^{-8} \times \sum_{J=1}^{r} (F_{dj} \times {}_{dj} \times V_j)$$

Where:

E_k	=	lb. Pollutant
dj	=	Fuel Usage Natural Gas mmcf
b	=	3% O_2 South Coast AQMD Default Value
$ppmv_c$	=	Concentration of Dryer, 170 ppmv (Based on Source Testing)
Fdj	=	8710, Dry F Factor for Natural Gas, dscf/mmBTU/mmcf (Attachment "G")
Vj	=	1050, High Heat Value of Natural Gas mmBTU/mmcf (Attachment "G")
Ek/dj	=	132 lbs/mmcf

ALTA ENVIRONMENTAL

3. Overall Emission Estimates for Dryer

The emissions for NO_x and CO are based on the mass emission equation, as detailed in the previous section. The emissions for VOC, SO_x and PM_{10} are based on AP-42 (Refer to Attachment "G").

The dryer in this facility is expected to consume 2.3 therms per ton of hot mix asphalt produced (10 therms = 1 mmBTU heat value) (2.3 therms/ton × 1,000,000 BTU/10 therms = 0.23 mmBTU/ton).

Pollutant	Hot Mix Heat Requirement (mmBTU/ton)	÷	Natural Gas[1] Heating Value (mmBTU/mmcf)	×	Emission[3] Factor (lbs/mmcf)	=	Emission[2] Factor (lbs/ton)
VOC	--		--		--		0.0082
SO_x	--		--		--		0.0034
PM_{10}	--		--		--		0.0194
NO_x	0.23		1,050		42.1		0.0092
CO	0.23		1,050		132		0.0289

Pollutant	Asphalt Production (tons/hour)	×	AP-42 Emission Factor (lbs/ton)	=	Maximum Emissions (lbs/hour)
VOC	500		0.0082		4.10
SO_x	500		0.0034		1.70
PM_{10}	500		0.0194		9.70
NO_x	500		0.0092		4.61
CO	500		0.0289		14.46

Pollutant	Asphalt Production (tons/day)	×	Emission Factor (lbs/ton)	=	Maximum Emissions (lbs/day)
VOC	4,500		0.0082		36.90
SO_x	4,500		0.0034		15.30
PM_{10}	4,500		0.0194		87.30
NO_x	4,500		0.0092		41.50
CO	4,500		0.0289		130.11

1 South Coast AQMD HHV for Natural Gas (Refer to Attachment "G").
2 AP-42 Chapter 11.1, ICAPCD El Centro Emissions Analysis.
3 See Previous Sections.

Pollutant	Asphalt Production (tons/year)	×	Emission Factor (lbs/ton)	=	Maximum Emissions (lbs/year)	=	Maximum Emissions (tons/year)
VOC	675,000		0.0082		5,535		2.77
SO_x	675,000		0.0034		2,295		1.15
PM_{10}	675,000		0.0194		13,095		6.55
NO_x	675,000		0.0092		6,225		3.11
CO	675,000		0.0289		19,517		9.76

ALTA ENVIRONMENTAL

Emission Estimates for Hot Oil Heater

Pollutant	Hot Oil Heat Requirement (mmBTU/hour)	÷	Natural Gas[1] Heating Value (mmBTU/mmcf)	×	SCAQMD[2] Emission Factor (lbs/mmcf)	=	Emission Factor (lbs/hour)
VOC	1.2		1,050		7		0.0080
SO_x	1.2		1,050		0.6		0.0007
PM_{10}	1.2		1,050		7.5		0.0086
NO_x	1.2		1,050		130		0.1486
CO	1.2		1,050		35		0.0400

Pollutant	Operating Schedule (hours/day)	×	Emission Factor (lbs/hour)	=	Maximum Emissions (lbs/day)
VOC	24		0.0080		0.19
SO_x	24		0.0007		0.02
PM_{10}	24		0.0086		0.21
NO_x	24		0.1486		3.57
CO	24		0.0400		0.96

Pollutant	Operating Schedule (hours/year)	×	Emission Factor (lbs/hour)	=	Maximum Emissions (lbs/year)	=	Maximum Emissions (tons/year)
VOC	1,350		0.0080		10.8		0.01
SO_x	1,350		0.0007		0.93		0.00
PM_{10}	1,350		0.0086		11.6		0.01
NO_x	1,350		0.1486		200.6		0.10
CO	1,350		0.0400		54		0.03

1 South Coast AQMD HHV for Natural Gas (Refer to Attachment "G").

2 South Coast AQMD Default Emission Factors for External Combustion, Natural Gas (Other Equipment).

Pollutant	Aggregate Emissions (lbs/hour)	+	Dryer Emissions (lbs/hour)	+	Hot Oil Heater (lbs/hour)	=	Overall Emissions (lbs/hour)
VOC	--		4.1		0.01		4.11
SO_x	--		1.7		0.00		1.7
PM_{10}	0.54		9.7		0.01		10.25
NO_x	--		4.61		0.15		4.76
CO	--		14.46		0.04		14.5

Pollutant	Aggregate Emissions (lbs/day)	+	Dryer Emissions (lbs/day)	+	Hot Oil Heater (lbs/day)	=	Overall Emissions (lbs/day)	=	Overall Emissions (tons/day)
VOC	--		36.9		0.19		37.09		0.02
SO_x	--		15.3		0.02		15.32		0.01
PM_{10}	4.88		87.3		0.21		92.39		0.05
NO_x	--		41.5		3.57		45.06		0.02
CO	--		130.11		0.96		131.07		0.07

Pollutant	Aggregate Emissions (lbs/year)	+	Dryer Emissions (lbs/year)	+	Hot Oil Heater (lbs/year)	=	Overall Emissions (lbs/year)	=	Overall Emissions (tons/year)
VOC	--		5,535		10.8		5,546		2.77
SO_x	--		2,295		0.93		2,296		1.15
PM_{10}	732.21		13,095		11.57		13,839		6.92
NO_x	--		6,225		200.57		6,425		3.21
CO	--		19,517		54		19,571		9.79

ALTA ENVIRONMENTAL

ATTACHMENT "B"

READY MIX CONCRETE

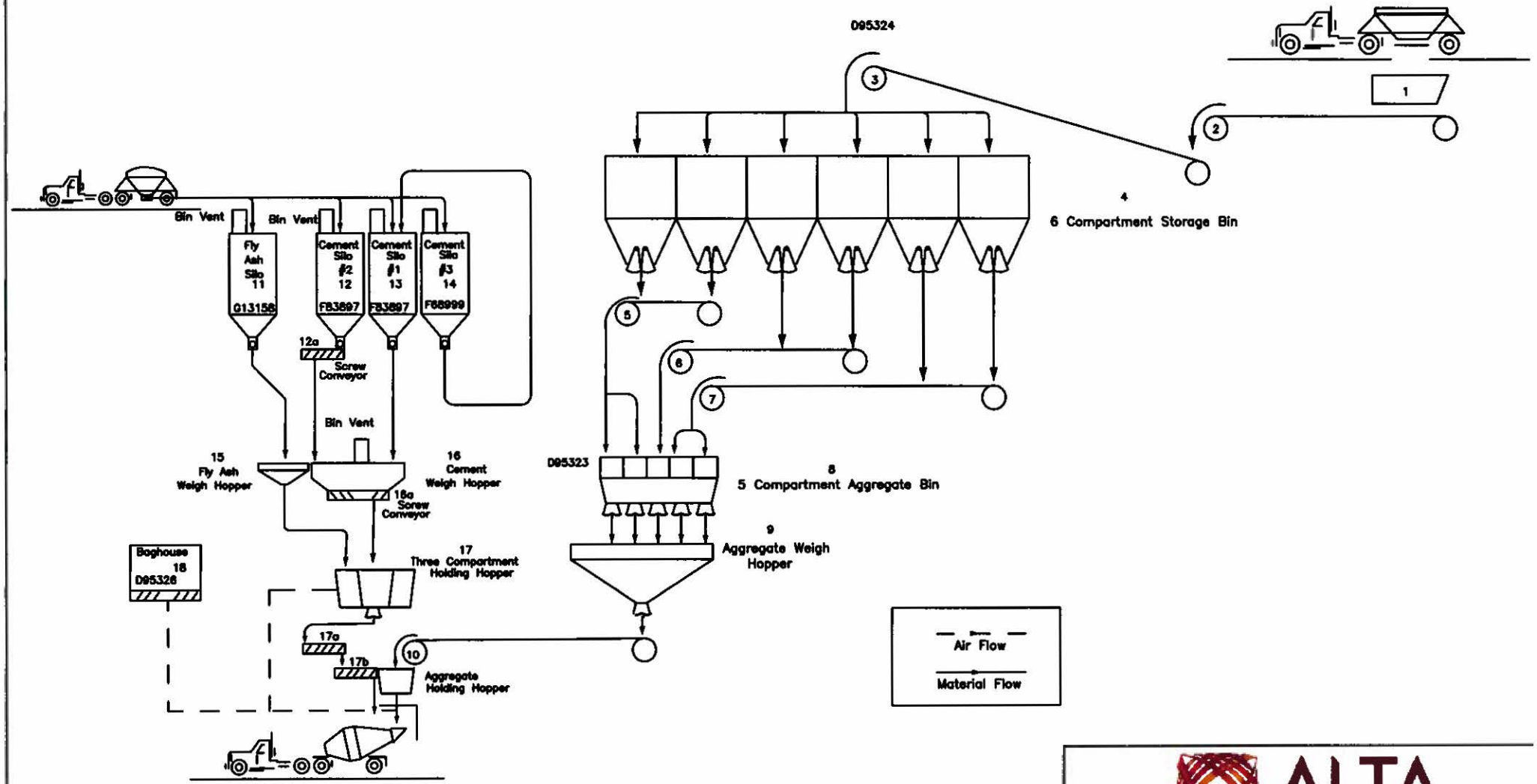

ALTA ENVIRONMENTAL

DESCRIPTION	READY MIX CONCRETE – JIMENEZ GRANITE CONSTRUCTION COMPANY
LOCATION	134 SOUTH 5TH STREET EL CENTRO, CA 92243

JOB NO.	DATE	FIGURE NO.
GCI-12-22091	1/29/13	2

Ready Mix Plant Estimates
The following calculations show the facility's PM_{10} emission. Refer to Figure 2.

Maximum Emissions

Description	Emission Factor Description	Throughput (tons/day)	×	Emission Factor (lbs/ton)	=	Controlled PM_{10} Emissions (lbs/day)
Truck to Drive Over Hopper	*Aggregate/Sand*	8,249		0.000046[1]		0.38
Belt Conveyor 2 to Belt Conveyor 3	*Aggregate/Sand*	8,249		0.000046[1]		0.38
Belt Conveyor 3 to Storage Bins	*Aggregate/Sand*	8,249		0.000046[1]		0.38
Belt Conveyors 5-7 to Aggregate Bin	*Aggregate/Sand*	8,249		0.000046[1]		0.38
Aggregate Weigh Hopper	*Aggregate/Sand*	8,249		0.00014[2, 4]		1.15
Belt Conveyor 10 to Holding Hopper	*Aggregate/Sand*	8,249		0.000046[1]		0.38
Cement/Fly Ash Loading	*Cement/Fly Ash*	1,408		0.00034[2, 3]		0.34
Truck Loadout	*Cement/Fly Ash*	1,408		0.00031[2, 3]		0.31
				Total PM_{10} (lbs/day)		3.71
				Total PM_{10} (lbs/year)		222.68

1 Emission Factor Based on AP-42 Table 11.19.2-2 (Refer to Attachment "E").
2 Emission Factors for Ready Mix Plant Based on AP-42 11.12-2 (Refer to Attachment "H").
3 Control Efficiency of 90% Applied for Bin Vent.
4 Control Efficiency of 95% Applied for Moisture as Allowed by SCAQMD AEIR Guidance, July 2010 for Process Equipment at Concrete Plants.

ATTACHMENT "C"

CRUMB RUBBER PLANT

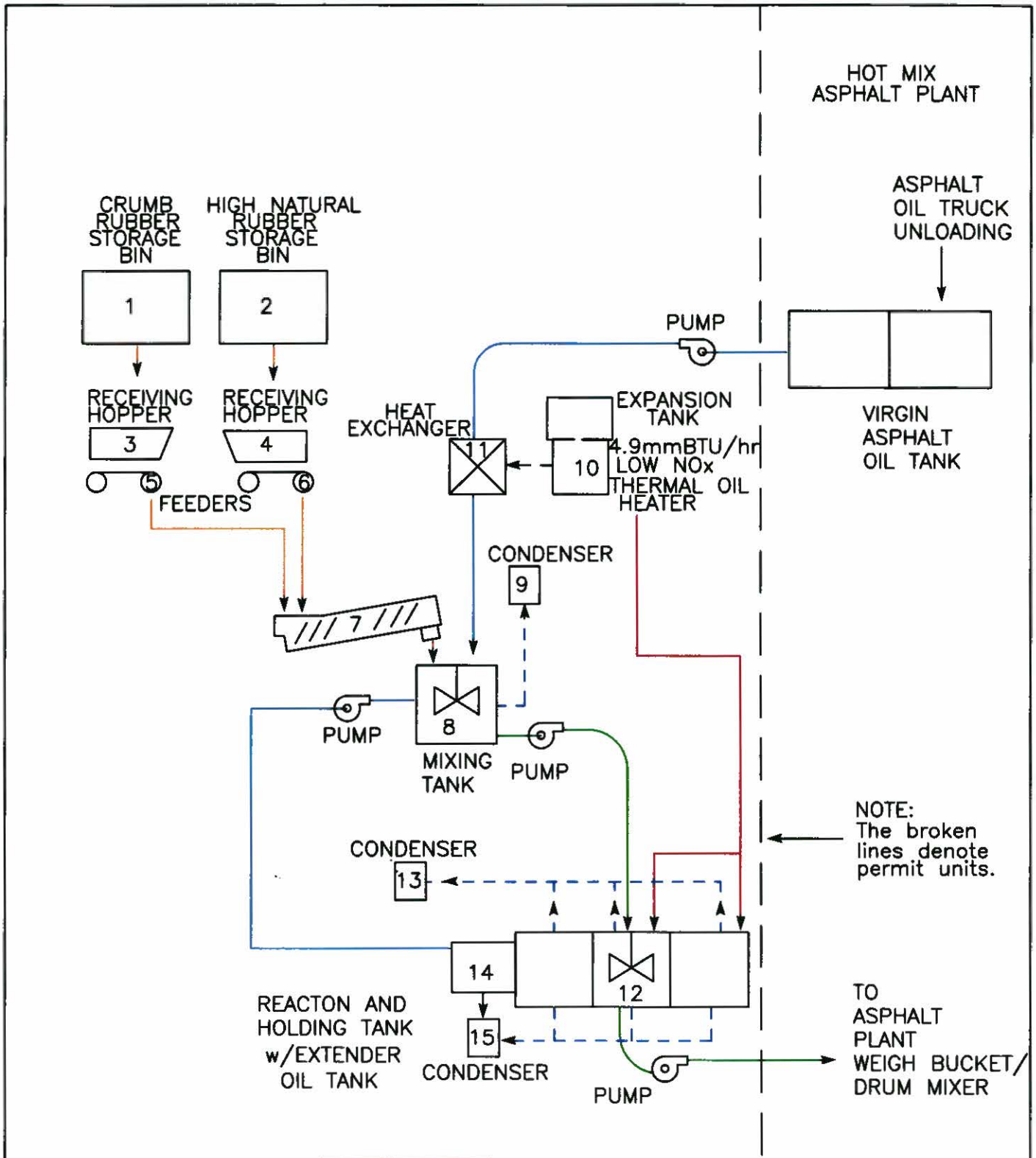

ALTA ENVIRONMENTAL

DESCRIPTION	CRUMB RUBBER PLANT – JIMENEZ GRANITE CONSTRUCTION COMPANY
LOCATION	134 SOUTH 5TH STREET EL CENTRO, CA 92243

JOB NO.	DATE	FIGURE NO.
GCI-12-22091	1/31/13	3

Emissions Estimates for the Crumb Rubber Plant

1. NO_x Emissions for the Crumb Rubber Plant

The NO_x mass emissions can be calculated using the Dry F-Factor. The following equation can be found in South Coast AQMD Rule 2012.

$$E_k = PPMV_c \times [20.9 / (20.9 - b)] \times 1.195 \times 10^{E-7} \times \sum_{J=1}^{r} (F_{dj} \times {}_{dj} \times V_j)$$

Where:

E_k	=	lb Pollutant
dj	=	Fuel usage Natural Gas mmcf
b	=	3% O_2 South Coast AQMD Default Value
$PPMV_c$	=	Concentration of Dryer, 30 NO_x PPMV
Fdj	=	8710, Dry F Factor for Natural Gas, dscf/mmBTU/mmcf (Attachment "G")
Vj	=	1050, High Heat Value of Natural Gas mmBTU/mmcf (Attachment "G")
Ek/dj	=	38.28 lbs/mmcf

2. CO Emissions for the Asphalt Dryer

The CO mass emissions can be calculated using the Dry F-Factor. The following equation can be found in South Coast AQMD Rule 2012 with an adjustment in the correction factor for CO.

$$E_k = ppmv_c \times [20.9 / (20.9 - b)] \times 7.267 \times 10^{-8} \times \sum_{J=1}^{r} (F_{dj} \times {}_{dj} \times V_j)$$

Where:

E_k	=	lb. Pollutant
dj	=	Fuel Usage Natural Gas mmcf
b	=	3% O_2 South Coast AQMD Default Value
$ppmv_c$	=	Concentration of Dryer, 400 ppmv
Fdj	=	8710, Dry F Factor for Natural Gas, dscf/mmBTU/mmcf (Attachment "G")
Vj	=	1050, High Heat Value of Natural Gas mmBTU/mmcf (Attachment "G")
Ek/dj	=	310.40 lbs/mmcf

3. Overall Emission Estimates for Crumb Rubber Plant Burner

The emissions for NO_x and CO are based on the mass emission equation, as detailed in the previous section. The emissions for VOC, SO_x and PM_{10} are based on South Coast AQMD Default Emission Fcators for external combustion and natural gas.

Pollutant	Hot Oil Heat Requirement (mmBTU/hour)	÷	Natural Gas[1] Heating Value (mmBTU/mmcf)	×	SCAQMD[2] Emission Factor (lbs/mmcf)	=	Emission Factor (lbs/hour)
VOC	4.9		1,050		5.5		0.0257
SO_x	4.9		1,050		0.6		0.0028
PM_{10}	4.9		1,050		7.6		0.0355
NO_x	4.9		1,050		38.28		0.1786
CO	4.9		1,050		310.4		1.4485

Pollutant	Operating Schedule (hours/day)	×	Emission Factor (lbs/hour)	=	Maximum Emissions (lbs/day)
VOC	8		0.0257		0.21
SO_x	8		0.0028		0.02
PM_{10}	8		0.0355		0.28
NO_x	8		0.1786		1.43
CO	8		1.4485		11.59

1 South Coast AQMD HHV for Natural Gas (Refer to Attachment "G").

2 South Coast AQMD Default Emission Factors for External Combustion, Natural Gas and Boilers.

ATTACHMENT "D"

DIESEL ENGINES

The following calculations show the diesel engine emissions from powering the Hot Mix Asphalt plant.

Horsepower of Engine: 2,000

Pollutant	Emission[1] Factor (g/hp-hour)	×	Operating Horsepower (HP)	=	Operating Emissions (g/hour)	÷	grams	=	Operating Emissions (lbs/hour)
PM_{10}	0.02		2,000		40		453.59		0.09
NO_x[3]	0.075		2,000		150		453.59		0.33
CO	1.30		2,000		2,600		453.59		5.73
SO_x[2]	--		--		--		--		0.02
VOC	0.14		2,000		280		453.59		0.62

Pollutant	Operating Emissions (lbs/hour)	×	hours/day	=	Operating Emissions (lbs/day)
PM_{10}	0.09		10		0.88
NO_x	0.33		10		3.31
CO	5.73		10		57.32
SO_x	0.02		10		0.20
VOC	0.62		10		6.17

1 PM, NO_x, VOC and CO are Based on CARB Emission Standards for Tier IV Engines (Compression Ignition Standards).

2 SO_x Emission Factor is Based on SCAQMD Internal Combustion Emission Factor for Diesel and Fuel Consumption Rate of 103.65 gallons per hour.

3 85% Reduction for NO_x was Achieved with the use of Selective Catalytic Reduction (SCR).

4 50% Reduction for CO was Achieved with use of SCR.

The following calculations show the diesel engine emissions from powering the Recycle Asphalt/Crumb Rubber Plant.

Horsepower of Engine: 400

Pollutant	Emission[1] Factor (g/hp-hour)	×	Operating Horsepower (HP)	=	Operating Emissions (g/hour)	÷	grams	=	Operating Emissions (lbs/hour)
PM_{10}	0.015		400		6		453.59		0.01
NO_x	0.30		400		120		453.59		0.26
CO	2.20		400		880		453.59		1.94
SO_x[2]	--		--		--		--		0.004
VOC	0.14		400		56		453.59		0.12

Pollutant	Operating Emissions (lbs/hour)	×	hours/day	=	Operating Emissions (lbs/day)
PM_{10}	0.01		16		0.21
NO_x	0.26		16		4.23
CO	1.94		16		31.04
SO_x	0.004		16		0.06
VOC	0.12		16		1.98

1 PM, NO_x, VOC and CO are Based on CARB Emission Standards for Tier IV Engines (Compression Ignition Standards).

2 SO_x Emission Factor is Based on SCAQMD Internal Combustion Emission Factor for Diesel and Fuel Consumption Rate of 20.73 gallons per hour.

ATTACHMENT "E"

AP-42 TABLE 11.19.2-2

Table 11.19.2-2 (English Units). EMISSION FACTORS FOR CRUSHED STONE PROCESSING OPERATIONS (lb/Ton)[a]

Source [b]	Total Particulate Matter [c,d]	EMISSION FACTOR RATING	Total PM-10	EMISSION FACTOR RATING	Total PM-2.5	EMISSION FACTOR RATING
Primary Crushing (SCC 3-05-020-01)	ND		ND[n]		ND[n]	
Primary Crushing (controlled) (SCC 3-05-020-01)	ND		ND[n]		ND[n]	
Secondary Crushing (SCC 3-05-020-02)	ND		ND[n]		ND[n]	
Secondary Crushing (controlled) (SCC 3-05-020-02)	ND		ND[n]		ND[n]	
Tertiary Crushing (SCC 3-050030-03)	0.0054[d]	E	0.0024[o]	C	ND[n]	
Tertiary Crushing (controlled) (SCC 3-05-020-03)	0.0012[d]	E	0.00054[p]	C	0.00010[q]	E
Fines Crushing (SCC 3-05-020-05)	0.0390[e]	E	0.0150[e]	E	ND	
Fines Crushing (controlled) (SCC 3-05-020-05)	0.0030[f]	E	0.0012[f]	E	0.000070[q]	E
Screening (SCC 3-05-020-02, 03)	0.025[e]	E	0.0087[l]	C	ND	
Screening (controlled) (SCC 3-05-020-02, 03)	0.0022[d]	E	0.00074[m]	C	0.000050[q]	E
Fines Screening (SCC 3-05-020-21)	0.30[g]	E	0.072[g]	E	ND	
Fines Screening (controlled) (SCC 3-05-020-21)	0.0036[g]	E	0.0022[g]	E	ND	
Conveyor Transfer Point (SCC 3-05-020-06)	0.0030[h]	E	0.00110[h]	D	ND	
Conveyor Transfer Point (controlled) (SCC 3-05-020-06)	0.00014[i]	E	4.6×10^{-5}[i]	D	1.3×10^{-5}[q]	E
Wet Drilling - Unfragmented Stone (SCC 3-05-020-10)	ND		8.0×10^{-5}[j]	E	ND	
Truck Unloading -Fragmented Stone (SCC 3-05-020-31)	ND		1.6×10^{-5}[j]	E	ND	
Truck Loading - Conveyor, crushed stone (SCC 3-05-020-32)	ND		0.00010[k]	E	ND	

a. Emission factors represent uncontrolled emissions unless noted. Emission factors in lb/Ton of material of throughput. SCC = Source Classification Code. ND = No data.

b. Controlled sources (with wet suppression) are those that are part of the processing plant that employs current wet suppression technology similar to the study group. The moisture content of the study group without wet suppression systems operating (uncontrolled) ranged from 0.21 to 1.3 percent, and the same facilities operating wet suppression systems (controlled) ranged from 0.55 to 2.88 percent. Due to carry over of the small amount of moisture required, it has been shown that each source, with the exception of crushers, does not need to employ direct water sprays. Although the moisture content was the only variable measured, other process features may have as much influence on emissions from a given source. Visual observations from each source under normal operating conditions are probably the best indicator of which emission factor is most appropriate. Plants that employ substandard control measures as indicated by visual observations should use the uncontrolled factor with an appropriate control efficiency that best reflects the effectiveness of the controls employed.

c. References 1, 3, 7, and 8

d. References 3, 7, and 8

ATTACHMENT "F"

AP-42 CHAPTER 11.1
HOT MIX ASPHALT PLANTS

11.1 Hot Mix Asphalt Plants

11.1.1 General[1-3,23, 392-394]

Hot mix asphalt (HMA) paving materials are a mixture of size-graded, high quality aggregate (which can include reclaimed asphalt pavement [RAP]), and liquid asphalt cement, which is heated and mixed in measured quantities to produce HMA. Aggregate and RAP (if used) constitute over 92 percent by weight of the total mixture. Aside from the amount and grade of asphalt cement used, mix characteristics are determined by the relative amounts and types of aggregate and RAP used. A certain percentage of fine aggregate (less than 74 micrometers [μm] in physical diameter) is required for the production of good quality HMA.

Hot mix asphalt paving materials can be manufactured by: (1) batch mix plants, (2) continuous mix (mix outside dryer drum) plants, (3) parallel flow drum mix plants, and (4) counterflow drum mix plants. This order of listing generally reflects the chronological order of development and use within the HMA industry.

In 1996, approximately 500 million tons of HMA were produced at the 3,600 (estimated) active asphalt plants in the United States. Of these 3,600 plants, approximately 2,300 are batch plants, 1,000 are parallel flow drum mix plants, and 300 are counterflow drum mix plants. The total 1996 HMA production from batch and drum mix plants is estimated at about 240 million tons and 260 million tons, respectively. About 85 percent of plants being manufactured today are of the counterflow drum mix design, while batch plants and parallel flow drum mix plants account for 10 percent and 5 percent respectively. Continuous mix plants represent a very small fraction of the plants in use ($\leq$0.5 percent) and, therefore, are not discussed further.

An HMA plant can be constructed as a permanent plant, a skid-mounted (easily relocated) plant, or a portable plant. All plants can have RAP processing capabilities. Virtually all plants being manufactured today have RAP processing capability. Most plants have the capability to use either gaseous fuels (natural gas) or fuel oil. However, based upon Department of Energy and limited State inventory information, between 70 and 90 percent of the HMA is produced using natural gas as the fuel to dry and heat the aggregate.

11.1.1.1 Batch Mix Plants -

Figure 11.1-1 shows the batch mix HMA production process. Raw aggregate normally is stockpiled near the production unit. The bulk aggregate moisture content typically stabilizes between 3 to 5 percent by weight.

Processing begins as the aggregate is hauled from the storage piles and is placed in the appropriate hoppers of the cold feed unit. The material is metered from the hoppers onto a conveyer belt and is transported into a rotary dryer (typically gas- or oil-fired). Dryers are equipped with flights designed to shower the aggregate inside the drum to promote drying efficiency.

As the hot aggregate leaves the dryer, it drops into a bucket elevator and is transferred to a set of vibrating screens, where it is classified into as many as four different grades (sizes) and is dropped into individual "hot" bins according to size. At newer facilities, RAP also may be transferred to a separate heated storage bin. To control aggregate size distribution in the final batch mix, the operator opens various hot bins over a weigh hopper until the desired mix and weight are obtained. Concurrent with the aggregate being weighed, liquid asphalt cement is pumped from a heated storage tank to an asphalt bucket, where it is weighed to achieve the desired aggregate-to-asphalt cement ratio in the final mix.

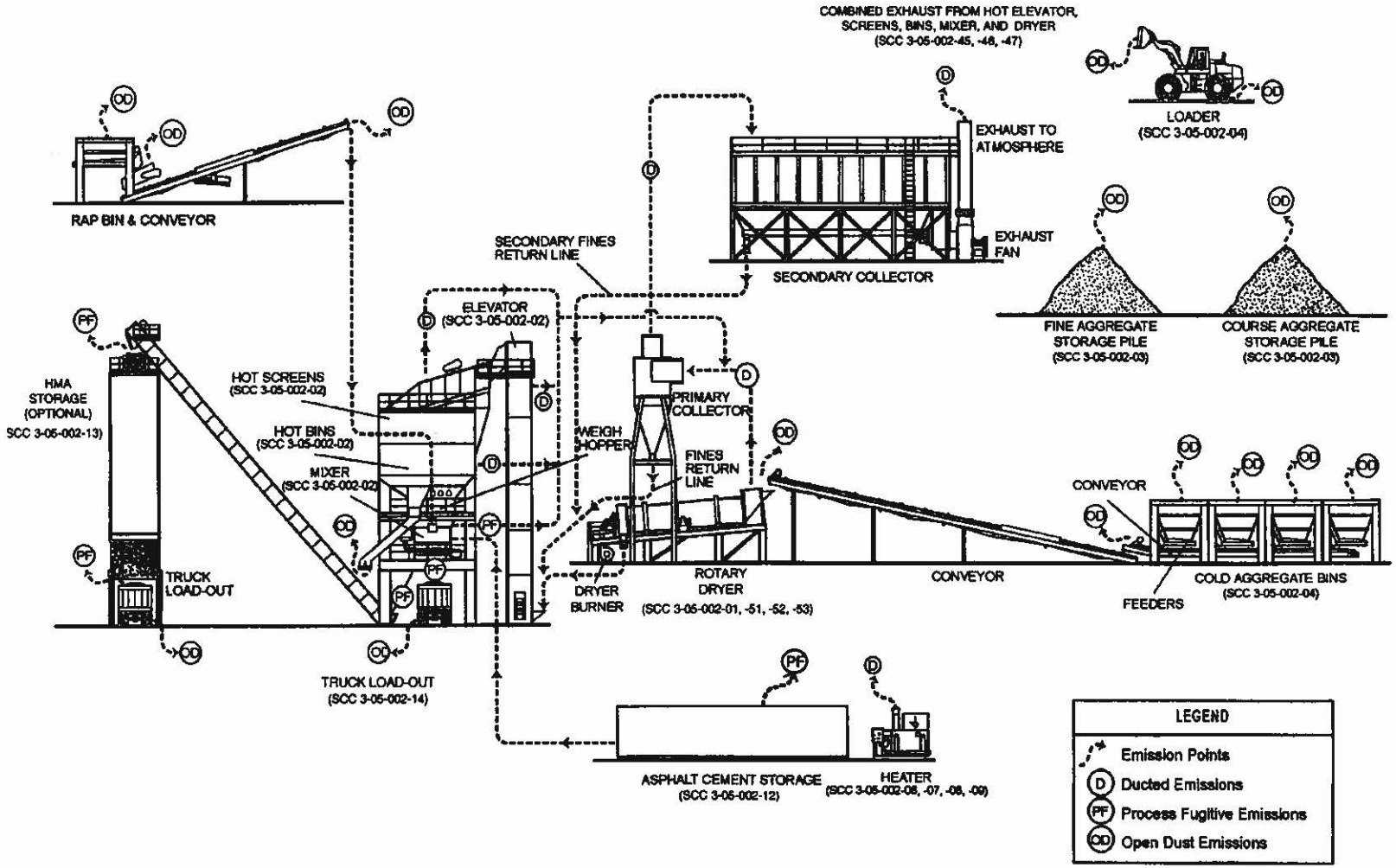

Figure 11.1-1. General process flow diagram for batch mix asphalt plants (source classification codes in parentheses).[3]

The aggregate from the weigh hopper is dropped into the mixer (pug mill) and dry-mixed for 6 to 10 seconds. The liquid asphalt is then dropped into the pug mill where it is mixed for an additional period of time. At older plants, RAP typically is conveyed directly to the pug mill from storage hoppers and combined with the hot aggregate. Total mixing time usually is less than 60 seconds. Then the hot mix is conveyed to a hot storage silo or is dropped directly into a truck and hauled to the job site.

11.1.1.2 Parallel Flow Drum Mix Plants -

Figure 11.1-2 shows the parallel flow drum mix process. This process is a continuous mixing type process, using proportioning cold feed controls for the process materials. The major difference between this process and the batch process is that the dryer is used not only to dry the material but also to mix the heated and dried aggregates with the liquid asphalt cement. Aggregate, which has been proportioned by size gradations, is introduced to the drum at the burner end. As the drum rotates, the aggregates, as well as the combustion products, move toward the other end of the drum in parallel. Liquid asphalt cement flow is controlled by a variable flow pump electronically linked to the new (virgin) aggregate and RAP weigh scales. The asphalt cement is introduced in the mixing zone midway down the drum in a lower temperature zone, along with any RAP and particulate matter (PM) from collectors.

The mixture is discharged at the end of the drum and is conveyed to either a surge bin or HMA storage silos, where it is loaded into transport trucks. The exhaust gases also exit the end of the drum and pass on to the collection system.

Parallel flow drum mixers have an advantage, in that mixing in the discharge end of the drum captures a substantial portion of the aggregate dust, therefore lowering the load on the downstream PM collection equipment. For this reason, most parallel flow drum mixers are followed only by primary collection equipment (usually a baghouse or venturi scrubber). However, because the mixing of aggregate and liquid asphalt cement occurs in the hot combustion product flow, organic emissions (gaseous and liquid aerosol) may be greater than in other asphalt mixing processes. Because data are not available to distinguish significant emissions differences between the two process designs, this effect on emissions cannot be verified.

11.1.1.3 Counterflow Drum Mix Plants -

Figure 11.1-3 shows a counterflow drum mix plant. In this type of plant, the material flow in the drum is opposite or counterflow to the direction of exhaust gases. In addition, the liquid asphalt cement mixing zone is located behind the burner flame zone so as to remove the materials from direct contact with hot exhaust gases.

Liquid asphalt cement flow is controlled by a variable flow pump which is electronically linked to the virgin aggregate and RAP weigh scales. It is injected into the mixing zone along with any RAP and particulate matter from primary and secondary collectors.

Because the liquid asphalt cement, virgin aggregate, and RAP are mixed in a zone removed from the exhaust gas stream, counterflow drum mix plants will likely have organic emissions (gaseous and liquid aerosol) that are lower than parallel flow drum mix plants. However, the available data are insufficient to discern any differences in emissions that result from differences in the two processes. A counterflow drum mix plant can normally process RAP at ratios up to 50 percent with little or no observed effect upon emissions.

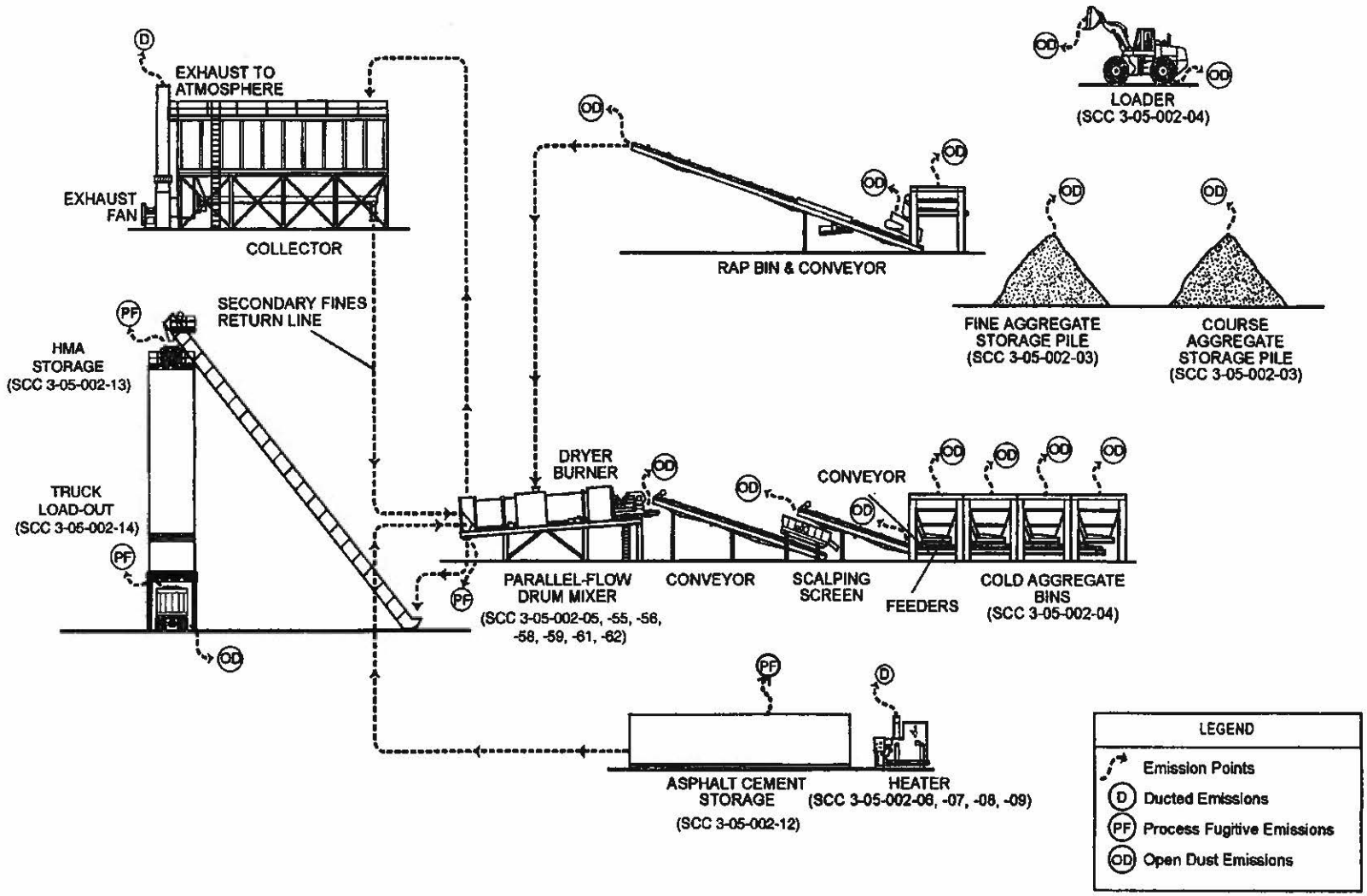

Figure 11.1-2. General process flow diagram for parallel-flow drum mix asphalt plants (source classification codes in parentheses).[3]

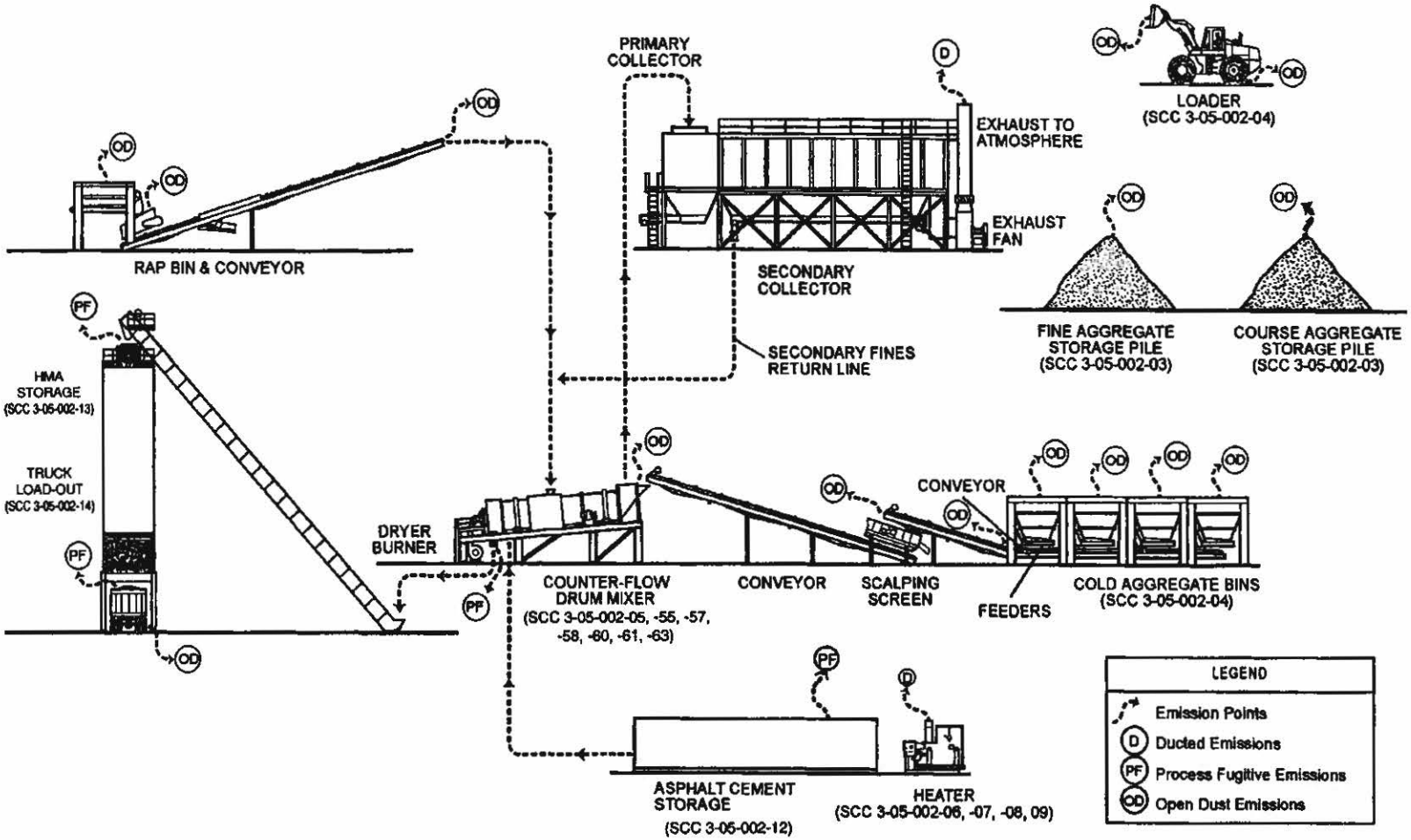

Figure 11.1-3. General process flow diagram for counter-flow drum mix asphalt plants (source classification codes in parentheses).[3]

11.1.1.4 Recycle Processes[393] -

In recent years, the use of RAP has been initiated in the HMA industry. Reclaimed asphalt pavement significantly reduces the amount of virgin rock and asphalt cement needed to produce HMA.

In the reclamation process, old asphalt pavement is removed from the road base. This material is then transported to the plant, and is crushed and screened to the appropriate size for further processing. The paving material is then heated and mixed with new aggregate (if applicable), and the proper amount of new asphalt cement is added to produce HMA that meets the required quality specifications.

11.1.2 Emissions And Controls[2-3,23]

Emissions from HMA plants may be divided into ducted production emissions, pre-production fugitive dust emissions, and other production-related fugitive emissions. Pre-production fugitive dust sources associated with HMA plants include vehicular traffic generating fugitive dust on paved and unpaved roads, aggregate material handling, and other aggregate processing operations. Fugitive dust may range from 0.1 μm to more than 300 μm in aerodynamic diameter. On average, 5 percent of cold aggregate feed is less than 74 μm (minus 200 mesh). Fugitive dust that may escape collection before primary control generally consists of PM with 50 to 70 percent of the total mass less than 74 μm. Uncontrolled PM emission factors for various types of fugitive sources in HMA plants are addressed in Sections 11.19.2, "Crushed Stone Processing", 13.2.1, "Paved Roads", 13.2.2, "Unpaved Roads", 13.2.3, "Heavy Construction Operations", and 13.2.4, "Aggregate Handling and Storage Piles." Production-related fugitive emissions and emissions from ducted production operations are discussed below. Emission points discussed below refer to Figure 11.1-1 for batch mix asphalt plants and to Figures 11.1-2 and 11.1-3 for drum mix plants.

11.1.2.1 Batch Mix Plants -

As with most facilities in the mineral products industry, batch mix HMA plants have two major categories of emissions: ducted sources (those vented to the atmosphere through some type of stack, vent, or pipe), and fugitive sources (those not confined to ducts and vents but emitted directly from the source to the ambient air). Ducted emissions are usually collected and transported by an industrial ventilation system having one or more fans or air movers, eventually to be emitted to the atmosphere through some type of stack. Fugitive emissions result from process and open sources and consist of a combination of gaseous pollutants and PM.

The most significant ducted source of emissions of most pollutants from batch mix HMA plants is the rotary drum dryer. The dryer emissions consist of water (as steam evaporated from the aggregate); PM; products of combustion (carbon dioxide [CO_2], nitrogen oxides [NO_x], and sulfur oxides [SO_x]); carbon monoxide (CO); and small amounts of organic compounds of various species (including volatile organic compounds [VOC], methane [CH_4], and hazardous air pollutants [HAP]). The CO and organic compound emissions result from incomplete combustion of the fuel. It is estimated that between 70 and 90 percent of the energy used at HMA plants is from the combustion of natural gas.

Other potential process sources include the hot-side conveying, classifying, and mixing equipment, which are vented either to the primary dust collector (along with the dryer gas) or to a separate dust collection system. The vents and enclosures that collect emissions from these sources are commonly called "fugitive air" or "scavenger" systems. The scavenger system may or may not have its own separate air mover device, depending on the particular facility. The emissions captured and transported by the scavenger system are mostly aggregate dust, but they may also contain gaseous organic compounds and a fine aerosol of condensed organic particles. This organic aerosol is created by the condensation of vapor into particles during cooling of organic vapors volatilized from the asphalt cement in the mixer (pug mill). The amount of organic aerosol produced depends to a large extent on the temperature of the asphalt cement and aggregate entering the pug mill. Organic vapor and its associated

aerosol also are emitted directly to the atmosphere as process fugitives during truck load-out, from the bed of the truck itself during transport to the job site, and from the asphalt storage tank. Both the low molecular weight organic compounds and the higher weight organic aerosol contain small amounts of HAP. The ducted emissions from the heated asphalt storage tanks include gaseous and aerosol organic compounds and combustion products from the tank heater.

The choice of applicable emission controls for PM emissions from the dryer and vent line includes dry mechanical collectors, scrubbers, and fabric filters. Attempts to apply electrostatic precipitators have met with little success. Practically all plants use primary dust collection equipment such as large diameter cyclones, skimmers, or settling chambers. These chambers often are used as classifiers to return collected material to the hot elevator and to combine it with the drier aggregate. To capture remaining PM, the primary collector effluent is ducted to a secondary collection device. Most plants use either a fabric filter or a venturi scrubber for secondary emissions control. As with any combustion process, the design, operation, and maintenance of the burner provides opportunities to minimize emissions of NO_x, CO, and organic compounds.

11.1.2.2 Parallel Flow Drum Mix Plants -

The most significant ducted source of emissions from parallel-flow drum mix plants is the rotary drum dryer. Emissions from the drum consist of water (as steam evaporated from the aggregate); PM; products of combustion; CO; and small amounts of organic compounds of various species (including VOC, CH_4, and HAP). The organic compound and CO emissions result from incomplete combustion of the fuel and from heating and mixing of the liquid asphalt cement inside the drum. Although it has been suggested that the processing of RAP materials at these type plants may increase organic compound emissions because of an increase in mixing zone temperature during processing, the data supporting this hypothesis are very weak. Specifically, although the data show a relationship only between RAP content and condensible organic particulate emissions, 89 percent of the variations in the data were the result of other unknown process variables.

Once the organic compounds cool after discharge from the process stack, some condense to form a fine organic aerosol or "blue smoke" plume. A number of process modifications or restrictions have been introduced to reduce blue smoke, including installation of flame shields, rearrangement of flights inside the drum, adjustments of the asphalt injection point, and other design changes.

11.1.2.3 Counterflow Drum Mix Plants -

The most significant ducted source of emissions from counterflow drum mix plants is the rotary drum dryer. Emissions from the drum consist of water (as steam evaporated from the aggregate); PM; products of combustion; CO; and small amounts of organic compounds of various species (including VOC, CH_4, and HAP). The CO and organic compound emissions result primarily from incomplete combustion of the fuel, and can also be released from the heated asphalt. Liquid asphalt cement, aggregate, and sometimes RAP, are mixed in a zone not in contact with the hot exhaust gas stream. As a result, kiln stack emissions of organic compounds from counterflow drum mix plants may be lower than parallel flow drum mix plants. However, variations in the emissions due to other unknown process variables are more significant. As a result, the emission factors for parallel flow and counterflow drum mix plants are the same.

11.1.2.4 Parallel and Counterflow Drum Mix Plants -

Process fugitive emissions associated with batch plant hot screens, elevators, and the mixer (pug mill) are not present in the drum mix processes. However, there are fugitive PM and VOC emissions from transport and handling of the HMA from the drum mixer to the storage silo and also from the load-out operations to the delivery trucks. Since the drum process is continuous, these plants have surge

bins or storage silos. The fugitive dust sources associated with drum mix plants are similar to those of batch mix plants with regard to truck traffic and to aggregate material feed and handling operations.

Table 11.1-1 presents emission factors for filterable PM and PM-10, condensable PM, and total PM for batch mix HMA plants. Particle size data for batch mix HMA plants, based on the control technology used, are shown in Table 11.1-2. Table 11.1-3 presents filterable PM and PM-10, condensable PM, and total PM emission factors for drum mix HMA plants. Particle size data for drum mix HMA plants, based on the control technology used, are shown in Table 11.1-4. Tables 11.1-5 and -6 present emission factors for CO, CO_2, NO_x, sulfur dioxide (SO_2), total organic compounds (TOC), formaldehyde, CH_4, and VOC from batch mix plants. Tables 11.1-7 and -8 present emission factors for CO, CO_2, NO_x, SO_2, TOC, CH_4, VOC, and hydrochloric acid (HCl) from drum mix plants. The emission factors for CO, NO_x, and organic compounds represent normal plant operations without scrutiny of the burner design, operation, and maintenance. Information provided in Reference 390 indicates that attention to burner design, periodic evaluation of burner operation, and appropriate maintenance can reduce these emissions. Table 11.1-9 presents organic pollutant emission factors for batch mix plants. Table 11.1-10 presents organic pollutant emission factors for drum mix plants. Tables 11.1-11 and -12 present metals emission factors for batch and drum mix plants, respectively. Table 11.1-13 presents organic pollutant emission factors for hot (asphalt) oil systems.

11.1.2.5 Fugitive Emissions from Production Operations -

Emission factors for HMA load-out and silo filling operations can be estimated using the data in Tables 11.1-14, -15, and -16. Table 11.1-14 presents predictive emission factor equations for HMA load-out and silo filling operations. Separate equations are presented for total PM, extractable organic PM (as measured by EPA Method 315), TOC, and CO. For example, to estimate total PM emissions from drum mix or batch mix plant load-out operations using an asphalt loss-on-heating of 0.41 percent and temperature of 290°F, the following calculation is made:

$$
\begin{aligned}
EF &= 0.000181 + 0.00141(-V)e^{((0.0251)(290+460)-20.43)} \\
&= 0.000181 + 0.00141(-(-0.41))e^{((0.0251)(290+460)-20.43)} \\
&= 0.000181 + 0.00141(0.41)e^{(-1.605)} \\
&= 0.000181 + 0.00141(0.41)(0.2009) \\
&= 0.000181 + 0.000116 \\
&= 0.00030 \text{ lb total PM/ton of asphalt loaded}
\end{aligned}
$$

Tables 11.1-15 and -16 present speciation profiles for organic particulate-based and volatile particulate-based compounds, respectively. The speciation profile shown in Table 11.1-15 can be applied to the extractable organic PM emission factors estimated by the equations in Table 11.1-14 to estimate emission factors for specific organic PM compounds. The speciation profile presented in Table 11.1-16 can be applied to the TOC emission factors estimated by the equations in Table 11.1-14 to estimate emission factors for specific volatile organic compounds. The derivations of the predictive emission factor equations and the speciation profiles can be found in Reference 1.

For example, to estimate TOC emissions from drum mix plant load-out operations using an asphalt loss-on-heating of 0.41 percent and temperature of 290°F, the following calculation is made:

$$
\begin{aligned}
EF &= 0.0172(-V)e^{((0.0251)(290+460)-20.43)} \\
&= 0.0172(-(-0.41))e^{((0.0251)(290+460)-20.43)} \\
&= 0.0172(0.41)e^{(-1.605)} \\
&= 0.0172(0.41)(0.2009) \\
&= 0.0014 \text{ lb TOC/ton of asphalt loaded}
\end{aligned}
$$

To estimate the benzene emissions from the same operation, use the TOC emission factor calculated above and apply the benzene fraction for load-out emissions from Table 11.1-16:

$$EF = 0.0014\ (0.00052)$$
$$= 7.3 \times 10^{-7} \text{ lb benzene/ton of asphalt loaded}$$

Emissions from asphalt storage tanks can be estimated using the procedures described in AP-42 Section 7.1, Organic Liquid Storage Tanks, and the TANKS software. Site-specific data should be used for storage tank specifications and operating parameters, such as temperature. If site-specific data for Antoine's constants for an average asphalt binder used by the facility are unavailable, the following values for an average liquid asphalt binder can be used:

A = 75,350.06
B = 9.00346

These values should be inserted into the Antoine's equation in the following form:

$$\log_{10} P = \frac{-0.05223A}{T} + B$$

where:

P = vapor pressure, mm Hg
T = absolute temperature, Kelvin

The assumed average liquid molecular weight associated with these Antoine's constants is 1,000 atomic mass units and the average vapor molecular weight is 105. Emission factors estimated using these default values should be assigned a rating of E. Carbon monoxide emissions can be estimated by multiplying the THC emissions calculated by the TANKS program by 0.097 (the ratio of silo filling CO emissions to silo filling TOC emissions).

Vapors from the HMA loaded into transport trucks continue following load-out operations. The TOC emissions for the 8-minute period immediately following load-out (yard emissions) can be estimated using an emission factor of 0.00055 kg/Mg (0.0011 lb/ton) of asphalt loaded. This factor is assigned a rating of E. The derivation of this emission factor is described in Reference 1. Carbon monoxide emissions can be estimated by multiplying the TOC emissions by 0.32 (the ratio of truck load-out CO emissions to truck load-out THC emissions).

11.2.3 Updates Since the Fifth Edition

The Fifth Edition was released in January 1995. Revisions to this section since that date are summarized below. For further detail, consult the background report for this section. This and other documents can be found on the CHIEF Web Site at http://www.epa.gov/ttn/chief/, or by calling the Info CHIEF Help Desk at (919)541-1000.

December 2000

- All emission factors were revised and new factors were added. For selected pollutant emissions, separate factors were developed for distilate oil, No. 6 oil and waste oil fired dryers. Dioxin and Furan emission factors were developed for oil fired drum mix plants. Particulate, VOC and CO factors were developed for silo filling, truck load out and post truck load out operations at batch plants and drum mix plants. Organic species profiles were developed for silo filling, truck load out and post truck load out operations.

March 2004

- The emission factor for formaldehyde for oil fired hot oil heaters was revised. An emission factor for formaldehyde for gas fired hot oil heaters and emission factors for CO and CO_2 for gas and oil fired hot oil heaters were developed. (Table 11.1-13)

Table 11.1-1. PARTICULATE MATTER EMISSION FACTORS FOR BATCH MIX HOT MIX ASPHALT PLANTS[a]

Process	Filterable PM				Condensable PM[b]				Total PM			
	PM[c]	EMISSION FACTOR RATING	PM-10[d]	EMISSION FACTOR RATING	Inorganic	EMISSION FACTOR RATING	Organic	EMISSION FACTOR RATING	PM[e]	EMISSION FACTOR RATING	PM-10[f]	EMISSION FACTOR RATING
Dryer, hot screens, mixer[g] (SCC 3-05-002-45, -46, -47)												
Uncontrolled	32[h]	E	4.5	E	0.013[j]	E	0.0041[j]	E	32	E	4.5	E
Venturi or wet scrubber	0.12[k]	C	ND	NA	0.013[m]	B	0.0041[n]	B	0.14	C	ND	NA
Fabric filter	0.025[p]	A	0.0098	C	0.013[m]	A	0.0041[n]	A	0.042	B	0.027	C

[a] Factors are lb/ton of product. SCC = Source Classification Code. ND = no data. NA = not applicable. To convert from lb/ton to kg/Mg, multiply by 0.5.

[b] Condensable PM is that PM collected using an EPA Method 202, Method 5 (analysis of "back-half" or impingers), or equivalent sampling train.

[c] Filterable PM is that PM collected on or before the filter of an EPA Method 5 (or equivalent) sampling train.

[d] Particle size data from Reference 23 were used in conjunction with the filterable PM emission factors shown.

[e] Total PM is the sum of filterable PM, condensable inorganic PM, and condensable organic PM.

[f] Total PM-10 is the sum of filterable PM-10, condensable inorganic PM, and condensable organic PM.

[g] Batch mix dryer fired with natural gas, propane, fuel oil, waste oil, and coal. The data indicate that fuel type does not significantly effect PM emissions.

[h] Reference 5.

[j] Although no data are available for uncontrolled condensable PM, values are assumed to be equal to the controlled value measured.

[k] Reference 1, Table 4-19. Average of data from 16 facilities. Range: 0.047 to 0.40 lb/ton. Median: 0.049 lb/ton. Standard deviation: 0.11 lb/ton.

[m] Reference 1, Table 4-19. Average of data from 35 facilities. Range: 0.00073 to 0.12 lb/ton. Median: 0.0042 lb/ton. Standard deviation: 0.024 lb/ton.

[n] Reference 1, Table 4-19. Average of data from 24 facilities. Range: 0.000012 to 0.018 lb/ton. Median: 0.0026 lb/ton. Standard deviation: 0.0042 lb/ton.

[p] Reference 1, Table 4-19. Average of data from 89 facilities. Range: 0.0023 to 0.18 lb/ton. Median: 0.012 lb/ton. Standard deviation: 0.033 lb/ton.

Table 11.1-2. SUMMARY OF PARTICLE SIZE DISTRIBUTION FOR BATCH MIX DRYERS, HOT SCREENS, AND MIXERS[a]

EMISSION FACTOR RATING: E

Particle Size, μm[b]	Cumulative Mass Less Than or Equal to Stated Size (%)[c]		Emission Factors, lb/ton	
	Uncontrolled[d]	Fabric Filter	Uncontrolled[d]	Fabric Filter
1.0	ND	30[e]	ND	0.0075[e]
2.5	0.83	33[e]	0.27	0.0083[e]
5.0	3.5	36[e]	1.1	0.0090[e]
10.0	14	39[f]	4.5	0.0098[f]
15.0	23	47[e]	7.4	0.012[e]

[a] Emission factor units are lb/ton of HMA provided. Rounded to two significant figures. SCC 3-05-002-45, -46, -47. ND = no data available. To convert from lb/ton to kg/Mg, multiply by 0.5.

[b] Aerodynamic diameter.

[c] Applies only to the mass of filterable PM.

[d] References 23, Table 3-36. The emission factors are calculated using the particle size data from this reference in conjunction with the filterable PM emission factor shown in Table 11.1-1.

[e] References 23, Page J-61. The emission factors are calculated using the particle size data from this reference in conjunction with the filterable PM emission factor shown in Table 11.1-1.

[f] References 23-24. The emission factors are calculated using the particle size data from these references in conjunction with the filterable PM emission factor shown in Table 11.1-1.

Table 11.1-3. PARTICULATE MATTER EMISSION FACTORS FOR DRUM MIX HOT MIX ASPHALT PLANTS[a]

Process	Filterable PM				Condensable PM[b]				Total PM			
	PM[c]	EMISSION FACTOR RATING	PM-10[d]	EMISSION FACTOR RATING	Inorganic	EMISSION FACTOR RATING	Organic	EMISSION FACTOR RATING	PM[e]	EMISSION FACTOR RATING	PM-10[f]	EMISSION FACTOR RATING
Dryer[g] (SCC 3-05-002-05,-55 to -63)												
Uncontrolled	28[h]	D	6.4	D	0.0074[j]	E	0.058[k]	E	28	D	6.5	D
Venturi or wet scrubber	0.026[m]	A	ND	NA	0.0074[n]	A	0.012[p]	A	0.045	A	ND	NA
Fabric filter	0.014[q]	A	0.0039	C	0.0074[n]	A	0.012[p]	A	0.033	A	0.023	C

[a] Factors are lb/ton of product. SCC = Source Classification Code. ND = no data. NA = not applicable. To convert from lb/ton to kg/Mg, multiply by 0.5.

[b] Condensable PM is that PM collected using an EPA Method 202, Method 5 (analysis of "back-half" or impingers), or equivalent sampling train.

[c] Filterable PM is that PM collected on or before the filter of an EPA Method 5 (or equivalent) sampling train.

[d] Particle size data from Reference 23 were used in conjunction with the filterable PM emission factors shown.

[e] Total PM is the sum of filterable PM, condensable inorganic PM, and condensable organic PM.

[f] Total PM-10 is the sum of filterable PM-10, condensable inorganic PM, and condensable organic PM.

[g] Drum mix dryer fired with natural gas, propane, fuel oil, and waste oil. The data indicate that fuel type does not significantly effect PM emissions.

[h] References 31, 36-38, 340.

[j] Because no data are available for uncontrolled condensable inorganic PM, the emission factor is assumed to be equal to the maximum controlled condensable inorganic PM emission factor.

[k] References 36-37.

[m] Reference 1, Table 4-14. Average of data from 36 facilities. Range: 0.0036 to 0.097 lb/ton. Median: 0.020 lb/ton. Standard deviation: 0.022 lb/ton.

[n] Reference 1, Table 4-14. Average of data from 30 facilities. Range: 0.0012 to 0.027 lb/ton. Median: 0.0051 lb/ton. Standard deviation: 0.0063 lb/ton.

[p] Reference 1, Table 4-14. Average of data from 41 facilities. Range: 0.00035 to 0.074 lb/ton. Median: 0.0046 lb/ton. Standard deviation: 0.016 lb/ton.

[q] Reference 1, Table 4-14. Average of data from 155 facilities. Range: 0.00089 to 0.14 lb/ton. Median: 0.010 lb/ton. Standard deviation: 0.017 lb/ton.

Table 11.1-4. SUMMARY OF PARTICLE SIZE DISTRIBUTION FOR DRUM MIX DRYERS[a]

EMISSION FACTOR RATING: E

Particle Size, μm[b]	Cumulative Mass Less Than or Equal to Stated Size (%)[c]		Emission Factors, lb/ton	
	Uncontrolled[d]	Fabric Filter	Uncontrolled[d]	Fabric Filter
1.0	ND	15[e]	ND	0.0021[e]
2.5	5.5	21[f]	1.5	0.0029[f]
10.0	23	30[g]	6.4	0.0042[g]
15.0	27	35[d]	7.6	0.0049[d]

[a] Emission factor units are lb/ton of HMA produced. Rounded to two significant figures. SCC 3-05-002-05, and 3-05-002-55 to -63. ND = no data available. To convert from lb/ton to kg/Mg, multiply by 0.5.

[b] Aerodynamic diameter.

[c] Applies only to the mass of filterable PM.

[d] Reference 23, Table 3-35. The emission factors are calculated using the particle size data from this reference in conjunction with the filterable PM emission factor shown in Table 11.1-3.

[e] References 214, 229. The emission factors are calculated using the particle size data from these references in conjunction with the filterable PM emission factor shown in Table 11.1-3.

[f] References 23, 214, 229. The emission factors are calculated using the particle size data from these references in conjunction with the filterable PM emission factor shown in Table 11.1-3.

[g] Reference 23, 25, 229. The emission factors are calculated using the particle size data from these references in conjunction with the filterable PM emission factor shown in Table 11.1-3. EMISSION FACTOR RATING: D.

Table 11.1-5. EMISSION FACTORS FOR CO, CO_2, NO_x, AND SO_2 FROM BATCH MIX HOT MIX ASPHALT PLANTS[a]

Process	CO[b]	EMISSION FACTOR RATING	CO_2[c]	EMISSION FACTOR RATING	NO_x	EMISSION FACTOR RATING	SO_2[c]	EMISSION FACTOR RATING
Natural gas-fired dryer, hot screens, and mixer (SCC 3-05-002-45)	0.40	C	37[d]	A	0.025[e]	D	0.0046[f]	E
No. 2 fuel oil-fired dryer, hot screens, and mixer (SCC 3-05-002-46)	0.40	C	37[d]	A	0.12[g]	E	0.088[h]	E
Waste oil-fired dryer, hot screens, and mixer (SCC 3-05-002-47)	0.40	C	37[d]	A	0.12[g]	E	0.088[h]	E
Coal-fired dryer, hot screens, and mixer[j] (SCC 3-05-002-98)	ND	NA	37[d]	A	ND	NA	0.043[k]	E

[a] Emission factor units are lb per ton of HMA produced. SCC = Source Classification Code. ND = no data available. NA = not applicable. To convert from lb/ton to kg/Mg, multiply by 0.5.

[b] References 24, 34, 46-47, 49, 161, 204, 215-217, 282, 370, 378, 381. The CO emission factors represent normal plant operations without scrutiny of the burner design, operation, and maintenance. Information is available that indicates that attention to burner design, periodic evaluation of burner operation, and appropriate maintenance can reduce CO emissions. Data for dryers firing natural gas, No. 2 fuel oil, and No. 6 fuel oil were combined to develop a single emission factor because the magnitude of emissions was similar for dryers fired with these fuels.

[c] Emissions of CO_2 and SO_2 can also be estimated based on fuel usage and the fuel combustion emission factors (for the appropriate fuel) presented in AP-42 Chapter 1. The CO_2 emission factors are an average of all available data, regardless of the dryer fuel (emissions were similar from dryers firing any of the various fuels). Based on data for drum mix facilities, 50 percent of the fuel-bound sulfur, up to a maximum (as SO_2) of 0.1 lb/ton of product, is expected to be retained in the product, with the remainder emitted as SO_2.

[d] Reference 1, Table 4-20. Average of data from 115 facilities. Range: 6.9 to 160 lb/ton. Median: 32 lb/ton. Standard deviation: 22 lb/ton.

[e] References 24, 34, 46-47.

[f] References 46-47.

[g] References 49, 226.

[h] References 49, 226, 228, 385.

[j] Dryer fired with coal and supplemental natural gas or fuel oil.

[k] Reference 126.

Table 11.1-6. EMISSION FACTORS FOR TOC, METHANE, AND VOC FROM BATCH MIX HOT MIX ASPHALT PLANTS[a]

Process	TOC[b]	EMISSION FACTOR RATING	CH_4[c]	EMISSION FACTOR RATING	VOC[d]	EMISSION FACTOR RATING
Natural gas-fired dryer, hot screens, and mixer (SCC 3-05-002-45)	0.015[e]	D	0.0074	D	0.0082	D
No. 2 fuel oil-fired dryer, hot screens, and mixer (SCC 3-05-002-46)	0.015[e]	D	0.0074	D	0.0082	D
No. 6 fuel oil-fired dryer, hot screens, and mixer (SCC 3-05-002-47)	0.043[f]	E	0.0074	D	0.036	E

[a] Emission factor units are lb per ton of HMA produced. SCC = Source Classification Code. ND = no data available. NA = not applicable. To convert from lb/ton to kg/Mg, multiply by 0.5.
[b] TOC equals total hydrocarbons as propane, as measured with an EPA Method 25A or equivalent sampling train plus formaldehyde.
[c] References 24, 46-47, 49. Factor includes data from natural gas- and No. 6 fuel oil-fired dryers. Methane measured with an EPA Method 18 or equivalent sampling train.
[d] The VOC emission factors are equal to the TOC factors minus the methane emission factors; differences in values reported are due to rounding.
[e] References 24, 46-47, 155.
[f] Reference 49.

Table 11.1-7. EMISSION FACTORS FOR CO, CO_2, NO_x, AND SO_2 FROM DRUM MIX HOT MIX ASPHALT PLANTS[a]

Process	CO[b]	EMISSION FACTOR RATING	CO_2[c]	EMISSION FACTOR RATING	NO_x	EMISSION FACTOR RATING	SO_2[c]	EMISSION FACTOR RATING
Natural gas-fired dryer (SCC 3-05-002-55,-56,-57)	0.13	B	33[d]	A	0.026[e]	D	0.0034[f]	D
No. 2 fuel oil-fired dryer (SCC 3-05-002-58,-59,-60)	0.13	B	33[d]	A	0.055[g]	C	0.011[h]	E
Waste oil-fired dryer (SCC 3-05-002-61,-62,-63)	0.13	B	33[d]	A	0.055[g]	C	0.058[j]	B
Coal-fired dryer[k] (SCC 3-05-002-98)	ND	NA	33[d]	A	ND	NA	0.19[m]	E

[a] Emission factor units are lb per ton of HMA produced. SCC = Source Classification Code. ND = no data available. NA = not applicable. To convert from lb/ton to kg/Mg, multiply by 0.5.

[b] References 25, 44, 48, 50, 149, 154, 197, 214, 229, 254, 339-342, 344, 346, 347, 390. The CO emission factors represent normal plant operations without scrutiny of the burner design, operation, and maintenance. Information is available that indicates that attention to burner design, periodic evaluation of burner operation, and appropriate maintenance can reduce CO emissions. Data for dryers firing natural gas, No. 2 fuel oil, and No. 6 fuel oil were combined to develop a single emission factor because the magnitude of emissions was similar for dryers fired with these fuels.

[c] Emissions of CO_2 and SO_2 can also be estimated based on fuel usage and the fuel combustion emission factors (for the appropriate fuel) presented in AP-42 Chapter 1. The CO_2 emission factors are an average of all available data, regardless of the dryer fuel (emissions were similar from dryers firing any of the various fuels). Fifty percent of the fuel-bound sulfur, up to a maximum (as SO_2) of 0.1 lb/ton of product, is expected to be retained in the product, with the remainder emitted as SO_2.

[d] Reference 1, Table 4-15. Average of data from 180 facilities. Range: 2.6 to 96 lb/ton. Median: 31 lb/ton. Standard deviation: 13 lb/ton.

[e] References 44-45, 48, 209, 341, 342.

[f] References 44-45, 48.

[g] References 25, 50, 153, 214, 229, 344, 346, 347, 352-354.

[h] References 50, 119, 255, 340

[j] References 25, 299, 300, 339, 345, 351, 371-377, 379, 380, 386-388.

[k] Dryer fired with coal and supplemental natural gas or fuel oil.

[m] References 88, 108, 189-190.

Table 11.1-8. EMISSION FACTORS FOR TOC, METHANE, VOC, AND HCl FROM DRUM MIX HOT MIX ASPHALT PLANTS[a]

Process	TOC[b]	EMISSION FACTOR RATING	CH_4[c]	EMISSION FACTOR RATING	VOC[d]	EMISSION FACTOR RATING	HCl[e]	EMISSION FACTOR RATING
Natural gas-fired dryer (SCC 3-05-002-55, -56,-57)	0.044[f]	B	0.012	C	0.032	C	ND	NA
No. 2 fuel oil-fired dryer (SCC 3-05-002-58, -59,-60)	0.044[f]	B	0.012	C	0.032	C	ND	NA
Waste oil-fired dryer (SCC 3-05-002-61, -62,-63)	0.044[f]	E	0.012	C	0.032	E	0.00021	D

[a] Emission factor units are lb per ton of HMA produced. SCC = Source Classification Code. ND = no data available. NA = not applicable. To convert from lb/ton to kg/Mg, multiply by 0.5.

[b] TOC equals total hydrocarbons as propane as measured with an EPA Method 25A or equivalent sampling train plus formaldehyde.

[c] References 25, 44-45, 48, 50, 339-340, 355. Factor includes data from natural gas-, No. 2 fuel oil, and waste oil-fired dryers. Methane measured with an EPA Method 18 or equivalent sampling train.

[d] The VOC emission factors are equal to the TOC factors minus the sum of the methane emission factors and the emission factors for compounds with negligible photochemical reactivity shown in Table 11.1-10; differences in values reported are due to rounding.

[e] References 348, 374, 376, 379, 380.

[f] References 25, 44-45, 48, 50, 149, 153-154, 209-212, 214, 241, 242, 339-340, 355.

Table 11.1-9. EMISSION FACTORS FOR ORGANIC POLLUTANT EMISSIONS FROM BATCH MIX HOT MIX ASPHALT PLANTS[a]

Process	Pollutant		Emission Factor, lb/ton	Emission Factor Rating	Ref. Nos.
	CASRN	Name			
Natural gas- or No. 2 fuel oil-fired dryer, hot screens, and mixer with fabric filter (SCC 3-05-002-45,-46)	Non-PAH Hazardous Air Pollutants[b]				
	75-07-0	Acetaldehyde	0.00032	E	24,34
	71-43-2	Benzene	0.00028	D	24,34,46, 382
	100-41-4	Ethylbenzene	0.0022	D	24,46,47,49
	50-00-0	Formaldehyde	0.00074	D	24,34,46,47,49,226,382
	106-51-4	Quinone	0.00027	E	24
	108-88-3	Toluene	0.0010	D	24,34,46,47
	1330-20-7	Xylene	0.0027	D	24,46,47,49
		Total non-PAH HAPs	0.0075		
	PAH HAPs				
	91-57-6	2-Methylnaphthalene[c]	7.1×10^{-5}	D	24,47,49
	83-32-9	Acenaphthene[c]	9.0×10^{-7}	D	34,46,226
	208-96-8	Acenaphthylene[c]	5.8×10^{-7}	D	34,46,226
	120-12-7	Anthracene[c]	2.1×10^{-7}	D	34,46,226
	56-55-3	Benzo(a)anthracene[c]	4.6×10^{-9}	E	46,226
	50-32-8	Benzo(a)pyrene[c]	3.1×10^{-10}	E	226
	205-99-2	Benzo(b)fluoranthene[c]	9.4×10^{-9}	D	34,46,226
	191-24-2	Benzo(g,h,i)perylene[c]	5.0×10^{-10}	E	226
	207-08-9	Benzo(k)fluoranthene[c]	1.3×10^{-8}	E	34,226
	218-01-9	Chrysene[c]	3.8×10^{-9}	E	46,226
	53-70-3	Dibenz(a,h)anthracene[c]	9.5×10^{-11}	E	226
	206-44-0	Fluoranthene[c]	1.6×10^{-7}	D	34,46,47,226
	86-73-7	Fluorene[c]	1.6×10^{-6}	D	34,46,47,226
	193-39-5	Indeno(1,2,3-cd)pyrene[c]	3.0×10^{-10}	E	226
	91-20-3	Naphthalene	3.6×10^{-5}	D	34,46,47,49,226
	85-01-8	Phenanthrene[c]	2.6×10^{-6}	D	34,46,47,226
	129-00-0	Pyrene[c]	6.2×10^{-8}	D	34,46,226
		Total PAH HAPs	0.00011		
	Total HAPs		0.0076		
	Non-HAP organic compounds				
	100-52-7	Benzaldehyde	0.00013	E	24
	78-84-2	Butyraldehyde/ isobutyraldehyde	3.0×10^{-5}	E	24
	4170-30-3	Crotonaldehyde	2.9×10^{-5}	E	24
	66-25-1	Hexanal	2.4×10^{-5}	E	24
		Total non-HAPs	0.00019		

Table 11.1-9 (cont.)

Process	Pollutant		Emission Factor, lb/ton	Emission Factor Rating	Ref. Nos.
	CASRN	Name			
Waste oil-, drain oil-, or No. 6 fuel oil-fired dryer, hot screens, and mixer with fabric filter (SCC 3-05-002-47)	Non-PAH Hazardous Air Pollutants[b]				
	75-07-0	Acetaldehyde	0.00032	E	24,34
	71-43-2	Benzene	0.00028	D	24,34,46, 382
	100-41-4	Ethylbenzene	0.0022	D	24,46,47,49
	50-00-0	Formaldehyde	0.00074	D	24,34,46,47,49,226, 382
	106-51-4	Quinone	0.00027	E	24
	108-88-3	Toluene	0.0010	D	24,34,46,47
	1330-20-7	Xylene	0.0027	D	24,46,47,49
		Total non-PAH HAPs	0.0075		
	PAH HAPs[b]				
	91-57-6	2-Methylnaphthalene[c]	7.1×10^{-5}	D	24,47,49
	83-32-9	Acenaphthene[c]	9.0×10^{-7}	D	34,46,226
	208-96-8	Acenaphthylene[c]	5.8×10^{-7}	D	34,46,226
	120-12-7	Anthracene[c]	2.1×10^{-7}	D	34,46,226
	56-55-3	Benzo(a)anthracene[c]	4.6×10^{-9}	E	46,226
	50-32-8	Benzo(a)pyrene[c]	3.1×10^{-10}	E	226
	205-99-2	Benzo(b)fluoranthene[c]	9.4×10^{-9}	D	34,46,226
	191-24-2	Benzo(g,h,i)perylene[c]	5.0×10^{-10}	E	226
	207-08-9	Benzo(k)fluoranthene[c]	1.3×10^{-8}	E	34,226
	218-01-9	Chrysene[c]	3.8×10^{-9}	E	46,226
	53-70-3	Dibenz(a,h)anthracene[c]	9.5×10^{-11}	E	226
	206-44-0	Fluoranthene[c]	2.4×10^{-5}	E	49
	86-73-7	Fluorene[c]	1.6×10^{-6}	D	34,46,47,226
	193-39-5	Indeno(1,2,3-cd)pyrene[c]	3.0×10^{-10}	E	226
	91-20-3	Naphthalene	3.6×10^{-5}	D	34,46,47,49, 226
	85-01-8	Phenanthrene[c]	3.7×10^{-5}	E	49
	129-00-0	Pyrene[c]	5.5×10^{-5}	E	49
		Total PAH HAPs	0.00023		
	Total HAPs		0.0077		
	Non-HAP organic compounds				
	100-52-7	Benzaldehyde	0.00013	E	24
	78-84-2	Butyraldehyde/ isobutyraldehyde	3.0×10^{-5}	E	24
	4170-30-3	Crotonaldehyde	2.9×10^{-5}	E	24
	66-25-1	Hexanal	2.4×10^{-5}	E	24
		Total non-HAPs	0.00019		

[a] Emission factor units are lb/ton of hot mix asphalt produced. Factors represent uncontrolled emissions, unless noted. CASRN = Chemical Abstracts Service Registry Number. SCC = Source Classification Code. To convert from lb/ton to kg/Mg, multiply by 0.5.

[b] Hazardous air pollutants (HAP) as defined in the 1990 Clean Air Act Amendments (CAAA).

[c] Compound is classified as polycyclic organic matter, as defined in the 1990 CAAA.

Table 11.1-10. EMISSION FACTORS FOR ORGANIC POLLUTANT EMISSIONS FROM DRUM MIX HOT MIX ASPHALT PLANTS[a]

Process	Pollutant		Emission Factor, lb/ton	Emission Factor Rating	Ref. No.
	CASRN	Name			
Natural gas-fired dryer with fabric filter[b] (SCC 3-05-002-55, -56,-57)	Non-PAH hazardous air pollutants[c]				
	71-43-2	Benzene[d]	0.00039	A	25,44,45,50, 341, 342, 344-351, 373, 376, 377, 383, 384
	100-41-4	Ethylbenzene	0.00024	D	25,44,45
	50-00-0	Formaldehyde[e]	0.0031	A	25,35,44,45,50, 339-344, 347-349, 371-373, 384, 388
	110-54-3	Hexane	0.00092	E	339-340
	540-84-1	Isooctane (2,2,4-trimethylpentane)	4.0×10^{-5}	E	339-340
	71-55-6	Methyl chloroform[f]	4.8×10^{-5}	E	35
	108-88-3	Toluene	0.00015	D	35,44,45
	1330-20-7	Xylene	0.00020	D	25,44,45
		Total non-PAH HAPs	0.0051		
	PAH HAPs				
	91-57-6	2-Methylnaphthalene[g]	7.4×10^{-5}	D	44,45,48
	83-32-9	Acenaphthene[g]	1.4×10^{-6}	E	48
	208-96-8	Acenaphthylene[g]	8.6×10^{-6}	D	35,45,48
	120-12-7	Anthracene[g]	2.2×10^{-7}	E	35,48
	56-55-3	Benzo(a)anthracene[g]	2.1×10^{-7}	E	48
	50-32-8	Benzo(a)pyrene[g]	9.8×10^{-9}	E	48
	205-99-2	Benzo(b)fluoranthene[g]	1.0×10^{-7}	E	35,48
	192-97-2	Benzo(e)pyrene[g]	1.1×10^{-7}	E	48
	191-24-2	Benzo(g,h,i)perylene[g]	4.0×10^{-8}	E	48
	207-08-9	Benzo(k)fluoranthene[g]	4.1×10^{-8}	E	35,48
	218-01-9	Chrysene[g]	1.8×10^{-7}	E	35,48
	206-44-0	Fluoranthene[g]	6.1×10^{-7}	D	35,45,48
	86-73-7	Fluorene[g]	3.8×10^{-6}	D	35,45,48,163
	193-39-5	Indeno(1,2,3-cd)pyrene[g]	7.0×10^{-9}	E	48
	91-20-3	Naphthalene[g]	9.0×10^{-5}	D	35,44,45,48,163
	198-55-0	Perylene[g]	8.8×10^{-9}	E	48
	85-01-8	Phenanthrene[g]	7.6×10^{-6}	D	35,44,45,48,163
	129-00-0	Pyrene[g]	5.4×10^{-7}	D	45,48
		Total PAH HAPs	0.00019		

Table 11.1-10 (cont.)

Process	Pollutant		Emission Factor, lb/ton	Emission Factor Rating	Ref. No.
	CASRN	Name			
Natural gas-fired dryer with fabric filter[b] (SCC 3-05-002-55, -56,-57) (cont.)	Total HAPs		0.0053		
	Non-HAP organic compounds				
	106-97-8	Butane	0.00067	E	339
	74-85-1	Ethylene	0.0070	E	339-340
	142-82-5	Heptane	0.0094	E	339-340
	763-29-1	2-Methyl-1-pentene	0.0040	E	339,340
	513-35-9	2-Methyl-2-butene	0.00058	E	339,340
	96-14-0	3-Methylpentane	0.00019	D	339,340
	109-67-1	1-Pentene	0.0022	E	339-340
	109-66-0	n-Pentane	0.00021	E	339-340
		Total non-HAP organics	0.024		
No. 2 fuel oil-fired dryer with fabric filter (SCC 3-05-002-58, -59,-60)	Non-PAH HAPs[c]				
	71-43-2	Benzene[d]	0.00039	A	25,44,45,50, 341, 342, 344-351, 373, 376, 377, 383, 384
	100-41-4	Ethylbenzene	0.00024	D	25,44,45
	50-00-0	Formaldehyde[e]	0.0031	A	25,35,44,45,50, 339-344, 347-349, 371-373, 384, 388
	110-54-3	Hexane	0.00092	E	339-340
	540-84-1	Isooctane (2,2,4-trimethylpentane)	4.0×10^{-5}	E	339-340
	71-55-6	Methyl chloroform[f]	4.8×10^{-5}	E	35
	108-88-3	Toluene	0.0029	E	25, 50, 339-340
	1330-20-7	Xylene	0.00020	D	25,44,45
		Total non-PAH HAPs	0.0078		
	PAH HAPs				
	91-57-6	2-Methylnaphthalene[g]	0.00017	E	50
	83-32-9	Acenaphthene[g]	1.4×10^{-6}	E	48
	208-96-8	Acenaphthylene[g]	2.2×10^{-5}	E	50
	120-12-7	Anthracene[g]	3.1×10^{-6}	E	50,162
	56-55-3	Benzo(a)anthracene[g]	2.1×10^{-7}	E	48
	50-32-8	Benzo(a)pyrene[g]	9.8×10^{-9}	E	48
	205-99-2	Benzo(b)fluoranthene[g]	1.0×10^{-7}	E	35,48
	192-97-2	Benzo(e)pyrene[g]	1.1×10^{-7}	E	48

Table 11.1-10 (cont.)

Process	Pollutant		Emission Factor, lb/ton	Emission Factor Rating	Ref. No.
	CASRN	Name			
No. 2 fuel oil-fired dryer with fabric filter (SCC 3-05-002-58, -59,-60) (cont.)	191-24-2	Benzo(g,h,i)perylene[g]	4.0×10^{-8}	E	48
	207-08-9	Benzo(k)fluoranthene[g]	4.1×10^{-8}	E	35,48
	218-01-9	Chrysene[g]	1.8×10^{-7}	E	35,48
	206-44-0	Fluoranthene[g]	6.1×10^{-7}	D	35,45,48
	86-73-7	Fluorene[g]	1.1×10^{-5}	E	50,164
	193-39-5	Indeno(1,2,3-cd)pyrene[g]	7.0×10^{-9}	E	48
	91-20-3	Naphthalene[g]	0.00065	D	25,50,162,164
	198-55-0	Perylene[g]	8.8×10^{-9}	E	48
	85-01-8	Phenanthrene[g]	2.3×10^{-5}	D	50,162,164
	129-00-0	Pyrene[g]	3.0×10^{-6}	E	50
		Total PAH HAPs	0.00088		
		Total HAPs	0.0087		
	Non-HAP organic compounds				
	106-97-8	Butane	0.00067	E	339
	74-85-1	Ethylene	0.0070	E	339-340
	142-82-5	Heptane	0.0094	E	339-340
	763-29-1	2-Methyl-1-pentene	0.0040	E	339,340
	513-35-9	2-Methyl-2-butene	0.00058	E	339,340
	96-14-0	3-Methylpentane	0.00019	D	339,340
	109-67-1	1-Pentene	0.0022	E	339-340
	109-66-0	n-Pentane	0.00021	E	339-340
		Total non-HAP organics	0.024		

Table 11.1-10 (cont.)

Process	Pollutant		Emission Factor, lb/ton	Emission Factor Rating	Ref. No.
	CASRN	Name			
Fuel oil- or waste oil-fired dryer with fabric filter (SCC 3-05-002-58, -59,-60,-61,-62, -63)	Dioxins				
	1746-01-6	2,3,7,8-TCDD[g]	2.1×10^{-13}	E	339
		Total TCDD[g]	9.3×10^{-13}	E	339
	40321-76-4	1,2,3,7,8-PeCDD[g]	3.1×10^{-13}	E	339
		Total PeCDD[g]	2.2×10^{-11}	E	339-340
	39227-28-6	1,2,3,4,7,8-HxCDD[g]	4.2×10^{-13}	E	339
	57653-85-7	1,2,3,6,7,8-HxCDD[g]	1.3×10^{-12}	E	339
	19408-24-3	1,2,3,7,8,9-HxCDD[g]	9.8×10^{-13}	E	339
		Total HxCDD[g]	1.2×10^{-11}	E	339-340
	35822-46-9	1,2,3,4,6,7,8-HpCDD[g]	4.8×10^{-12}	E	339
		Total HpCDD[g]	1.9×10^{-11}	E	339-340
	3268-87-9	Octa CDD[g]	2.5×10^{-11}	E	339
		Total PCDD[g]	7.9×10^{-11}	E	339-340
	Furans				
	51207-31-9	2,3,7,8-TCDF[g]	9.7×10^{-13}	E	339
		Total TCDF[g]	3.7×10^{-12}	E	339-340
		1,2,3,7,8-PeCDF[g]	4.3×10^{-12}	E	339-340
		2,3,4,7,8-PeCDF[g]	8.4×10^{-13}	E	339
		Total PeCDF[g]	8.4×10^{-11}	E	339-340
		1,2,3,4,7,8-HxCDF[g]	4.0×10^{-12}	E	339
		1,2,3,6,7,8-HxCDF[g]	1.2×10^{-12}	E	339
		2,3,4,6,7,8-HxCDF[g]	1.9×10^{-12}	E	339
		1,2,3,7,8,9-HxCDF[g]	8.4×10^{-12}	E	340
		Total HxCDF[g]	1.3×10^{-11}	E	339-340
		1,2,3,4,6,7,8-HpCDF[g]	6.5×10^{-12}	E	339
		1,2,3,4,7,8,9-HpCDF[g]	2.7×10^{-12}	E	339
		Total HpCDF[g]	1.0×10^{-11}	E	339-340
	39001-02-0	Octa CDF[g]	4.8×10^{-12}	E	339
		Total PCDF[g]	4.0×10^{-11}	E	339-340
		Total PCDD/PCDF[g]	1.2×10^{-10}	E	339-340

Table 11.1-10 (cont.)

Process	Pollutant		Emission Factor, lb/ton	Emission Factor Rating	Ref. No.
	CASRN	Name			
Fuel oil- or waste oil-fired dryer (uncontrolled) (SCC 3-05-002-58, -59,-60,-61,-62, -63)	Hazardous air pollutants[c]				
	Dioxins				
		Total HxCDD[g]	5.4×10^{-12}	E	340
	35822-46-9	1,2,3,4,6,7,8-HpCDD[g]	3.4×10^{-11}	E	340
		Total HpCDD[g]	7.1×10^{-11}	E	340
	3268-87-9	Octa CDD[g]	2.7×10^{-9}	E	340
		Total PCDD[g]	2.8×10^{-9}	E	340
	Furans				
		Total TCDF[g]	3.3×10^{-11}	E	340
		Total PeCDF[g]	7.4×10^{-11}	E	340
		1,2,3,4,7,8-HxCDF[g]	5.4×10^{-12}	E	340
		2,3,4,6,7,8-HxCDF[g]	1.6×10^{-12}	E	340
		Total HxCDF[g]	8.1×10^{-12}	E	340
Fuel oil- or waste oil-fired dryer (uncontrolled) (SCC 3-05-002-58, -59,-60,-61,-62, -63) (cont.)		1,2,3,4,6,7,8-HpCDF[g]	1.1×10^{-11}	E	340
		Total HpCDF[g]	3.8×10^{-11}	E	340
		Total PCDF[g]	1.5×10^{-10}	E	340
		Total PCDD/PCDF[g]	3.0×10^{-9}	E	340

Table 11.1-10 (cont.)

Process	Pollutant		Emission Factor, lb/ton	Emission Factor Rating	Ref. No.
	CASRN	Name			
Waste oil-fired dryer with fabric filter (SCC 3-05-002-61, -62,-63)	Non-PAH HAPs[c]				
	75-07-0	Acetaldehyde	0.0013	E	25
	107-02-8	Acrolein	2.6×10^{-5}	E	25
	71-43-2	Benzene[d]	0.00039	A	25,44,45,50,341,342, 344-351, 373, 376, 377, 383, 384
	100-41-4	Ethylbenzene	0.00024	D	25,44,45
	50-00-0	Formaldehyde[e]	0.0031	A	25,35,44,45,50,339-344,347-349,371-373, 384, 388
	110-54-3	Hexane	0.00092	E	339-340
	540-84-1	Isooctane (2,2,4-trimethylpentane)	4.0×10^{-5}	E	339-340
	78-93-3	Methyl Ethyl Ketone	2.0×10^{-5}	E	25
	123-38-6	Propionaldehyde	0.00013	E	25
	106-51-4	Quinone	0.00016	E	25
	71-55-6	Methyl chloroform[f]	4.8×10^{-5}	E	35
	108-88-3	Toluene	0.0029	E	25, 50, 339-340
	1330-20-7	Xylene	0.00020	D	25,44,45
		Total non-PAH HAPs	0.0095		
	PAH HAPs				
	91-57-6	2-Methylnaphthalene[g]	0.00017	E	50
	83-32-9	Acenaphthene[g]	1.4×10^{-6}	E	48
	208-96-8	Acenaphthylene[g]	2.2×10^{-5}	E	50
	120-12-7	Anthracene[g]	3.1×10^{-6}	E	50,162
	56-55-3	Benzo(a)anthracene[g]	2.1×10^{-7}	E	48
	50-32-8	Benzo(a)pyrene[g]	9.8×10^{-9}	E	48
	205-99-2	Benzo(b)fluoranthene[g]	1.0×10^{-7}	E	35,48
	192-97-2	Benzo(e)pyrene[g]	1.1×10^{-7}	E	48
	191-24-2	Benzo(g,h,i)perylene[g]	4.0×10^{-8}	E	48

Table 11.1-10 (cont.)

Process	Pollutant		Emission Factor, lb/ton	Emission Factor Rating	Ref. No.
	CASRN	Name			
Waste oil-fired dryer with fabric filter (SCC 3-05-002-61, -62,-63) (cont.)	207-08-9	Benzo(k)fluoranthene[g]	4.1×10^{-8}	E	35,48
	218-01-9	Chrysene[g]	1.8×10^{-7}	E	35,48
	206-44-0	Fluoranthene[g]	6.1×10^{-7}	D	35,45,48
	86-73-7	Fluorene[g]	1.1×10^{-5}	E	50,164
	193-39-5	Indeno(1,2,3-cd)pyrene[g]	7.0×10^{-9}	E	48
	91-20-3	Naphthalene[g]	0.00065	D	25,50,162,164
	198-55-0	Perylene[g]	8.8×10^{-9}	E	48
	85-01-8	Phenanthrene[g]	2.3×10^{-5}	D	50,162,164
	129-00-0	Pyrene[g]	3.0×10^{-6}	E	50
		Total PAH HAPs	0.00088		
		Total HAPs	0.010		
	Non-HAP organic compounds				
	67-64-1	Acetone[f]	0.00083	E	25
	100-52-7	Benzaldehyde	0.00011	E	25
	106-97-8	Butane	0.00067	E	339
	78-84-2	Butyraldehyde	0.00016	E	25
	4170-30-3	Crotonaldehyde	8.6×10^{-5}	E	25
	74-85-1	Ethylene	0.0070	E	339, 340
	142-82-5	Heptane	0.0094	E	339, 340
	66-25-1	Hexanal	0.00011	E	25
	590-86-3	Isovaleraldehyde	3.2×10^{-5}	E	25
	763-29-1	2-Methyl-1-pentene	0.0040	E	339, 340
	513-35-9	2-Methyl-2-butene	0.00058	E	339, 340
	96-14-0	3-Methylpentane	0.00019	D	339, 340
	109-67-1	1-Pentene	0.0022	E	339, 340
	109-66-0	n-Pentane	0.00021	E	339, 340
	110-62-3	Valeraldehyde	6.7×10^{-5}	E	25
		Total non-HAP organics	0.026		

[a] Emission factor units are lb/ton of hot mix asphalt produced. Table includes data from both parallel flow and counterflow drum mix dryers. Organic compound emissions from counterflow systems are expected to be less than from parallel flow systems, but the available data are insufficient to quantify

Table 11.1-10 (cont.)

accurately the difference in these emissions. CASRN = Chemical Abstracts Service Registry Number. SCC = Source Classification Code. To convert from lb/ton to kg/Mg, multiply by 0.5.

[b] Tests included dryers that were processing reclaimed asphalt pavement. Because of limited data, the effect of RAP processing on emissions could not be determined.

[c] Hazardous air pollutants (HAP) as defined in the 1990 Clean Air Act Amendments (CAAA).

[d] Based on data from 19 tests. Range: 0.000063 to 0.0012 lb/ton; median: 0.00030; Standard deviation: 0.00031.

[e] Based on data from 21 tests. Range: 0.0030 to 0.014 lb/ton; median: 0.0020; Standard deviation: 0.0036.

[f] Compound has negligible photochemical reactivity.

[g] Compound is classified as polycyclic organic matter, as defined in the 1990 CAAA. Total PCDD is the sum of the total tetra through octa dioxins; total PCDF is sum of the total tetra through octa furans; and total PCDD/PCDF is the sum of total PCDD and total PCDF.

Table 11.1-11. EMISSION FACTORS FOR METAL EMISSIONS FROM BATCH MIX HOT MIX ASPHALT PLANTS[a]

Process	Pollutant	Emission Factor, lb/ton	Emission Factor Rating	Reference Numbers
Dryer, hot screens, and mixer[b] (SCC 3-05-002-45,-46,-47)	Arsenic[c]	4.6×10^{-7}	D	34, 40, 226
	Barium	1.5×10^{-6}	E	24
	Beryllium[c]	1.5×10^{-7}	E	34, 226
	Cadmium[c]	6.1×10^{-7}	D	24, 34, 226
	Chromium[c]	5.7×10^{-7}	D	24, 34, 226
	Hexavalent chromium[c]	4.8×10^{-8}	E	34, 226
	Copper	2.8×10^{-6}	D	24, 34, 226
	Lead[c]	8.9×10^{-7}	D	24, 34, 226
	Manganese[c]	6.9×10^{-6}	D	24, 34, 226
	Mercury[c]	4.1×10^{-7}	E	34, 226
	Nickel[c]	3.0×10^{-6}	D	24, 34, 226
	Selenium[c]	4.9×10^{-7}	E	34, 226
	Zinc	6.8×10^{-6}	D	24, 34, 226

[a] Emission factor units are lb/ton of HMA produced. Emissions controlled by a fabric filter. SCC = Source Classification Code. To convert from lb/ton to kg/Mg, multiply by 0.5.

[b] Natural gas-, propane-, No. 2 fuel oil-, or waste oil-/drain oil-/No. 6 fuel oil-fired dryer. For waste oil-/drain oil-/No. 6 fuel oil-fired dryer, use a lead emission factor of 1.0×10^{-5} lb/ton (References 177 and 321, Emission factor rating: E) in lieu of the emission factor shown.

[c] Arsenic, beryllium, cadmium, chromium, hexavalent chromium, lead, manganese, mercury, nickel, and selenium are HAPs as defined in the 1990 CAAA.

Table 11.1-12. EMISSION FACTORS FOR METAL EMISSIONS FROM DRUM MIX HOT MIX ASPHALT PLANTS[a]

Process	Pollutant	Emission Factor, lb/ton	Emission Factor Rating	Reference Numbers
Fuel oil-fired dryer, uncontrolled (SCC 3-05-002-58, -59,-60)	Arsenic[b]	1.3×10^{-6}	E	340
	Barium	0.00025	E	340
	Beryllium[b]	0.0	E	340
	Cadmium[b]	4.2×10^{-6}	E	340
	Chromium[b]	2.4×10^{-5}	E	340
	Cobalt[b]	1.5×10^{-5}	E	340
	Copper	0.00017	E	340
	Lead[b]	0.00054	E	340
	Manganese[b]	0.00065	E	340
	Nickel[b]	0.0013	E	340
	Phosphorus[b]	0.0012	E	340
	Selenium[b]	2.4×10^{-6}	E	340
	Thallium	2.2×10^{-6}	E	340
	Zinc	0.00018	E	340
Natural gas- or propane-fired dryer, with fabric filter (SCC 3-05-002-55, -56,-57))	Antimony	1.8×10^{-7}	E	339
	Arsenic[b]	5.6×10^{-7}	D	25, 35, 339-340
	Barium	5.8×10^{-6}	E	25, 339-340
	Beryllium[b]	0.0	E	339-340
	Cadmium[b]	4.1×10^{-7}	D	25, 35, 162, 301, 339-340
	Chromium[b]	5.5×10^{-6}	C	25, 162-164, 301, 339-340
	Cobalt[b]	2.6×10^{-8}	E	339-340
	Copper	3.1×10^{-6}	D	25, 162-164, 339-340
	Hexavalent chromium[b]	4.5×10^{-7}	E	163
	Lead[b]	6.2×10^{-7}	E	35
	Manganese[b]	7.7×10^{-6}	D	25, 162-164, 339-340
	Mercury[b]	2.4×10^{-7}	E	35, 163
	Nickel[b]	6.3×10^{-5}	D	25, 163-164, 339-340
	Phosphorus[b]	2.8×10^{-5}	E	25, 339-340
	Silver	4.8×10^{-7}	E	25, 339-340
	Selenium[b]	3.5×10^{-7}	E	339-340
	Thallium	4.1×10^{-9}	E	339-340
	Zinc	6.1×10^{-5}	C	25, 35, 162-164, 339-340

Table 11.1-12 (cont.)

Process	Pollutant	Emission Factor, lb/ton	Emission Factor Rating	Reference Numbers
No. 2 fuel oil-fired dryer or waste oil/drain oil/No. 6 fuel oil-fired dryer, with fabric filter (SCC 3-05-002-58, -59,-60,-61,-62,-63)	Antimony	1.8×10^{-7}	E	339
	Arsenic[b]	5.6×10^{-7}	D	25, 35, 339-340
	Barium	5.8×10^{-6}	E	25, 339-340
	Beryllium[b]	0.0	E	339-340
	Cadmium[b]	4.1×10^{-7}	D	25, 35, 162, 301, 339-340
	Chromium[b]	5.5×10^{-6}	C	25, 162-164, 301, 339-340
	Cobalt[b]	2.6×10^{-8}	E	339-340
	Copper	3.1×10^{-6}	D	25, 162-164, 339-340
	Hexavalent chromium[b]	4.5×10^{-7}	E	163
	Lead[b]	1.5×10^{-5}	C	25, 162, 164, 178-179, 183, 301, 315, 339-340
	Manganese[b]	7.7×10^{-6}	D	25, 162-164, 339-340
	Mercury[b]	2.6×10^{-6}	D	162, 164, 339-340
	Nickel[b]	6.3×10^{-5}	D	25, 163-164, 339-340
	Phosphorus[b]	2.8×10^{-5}	E	25, 339-340
	Silver	4.8×10^{-7}	E	25, 339-340
	Selenium[b]	3.5×10^{-7}	E	339-340
	Thallium	4.1×10^{-9}	E	339-340
	Zinc	6.1×10^{-5}	C	25, 35, 162-164, 339-340

[a] Emission factor units are lb/ton of HMA produced. SCC = Source Classification Code. To convert from lb/ton to kg/Mg, multiply by 0.5. Emission factors apply to facilities processing virgin aggregate or a combination of virgin aggregate and RAP.

[b] Arsenic, beryllium, cadmium, chromium, hexavalent chromium, cobalt, lead, manganese, mercury, nickel, and selenium compounds are HAPs as defined in the 1990 CAAA. Elemental phosphorus also is a listed HAP, but the phosphorus measured by Method 29 is not elemental phosphorus.

Table 11.1-13. EMISSION FACTORS FOR HOT MIX ASPHALT HOT OIL SYSTEMS[a]

Process	Pollutant CASRN	Pollutant Name	Emission factor	Emission factor units	EMISSION FACTOR RATING	Reference
Hot oil system fired with natural gas (SCC 3-05-002-06)	630-08-0	Carbon monoxide	8.9×10^{-6}	lb/ft^3	C	395
	124-38-9	Carbon dioxide	0.20	lb/ft^3	C	395
	50-00-0	Formaldehyde	2.6×10^{-8}	lb/ft^3	C	395
Hot oil system fired with No. 2 fuel oil (SCC 3-05-002-08)	630-08-0	Carbon monoxide	0.0012	lb/gal	C	395
	124-38-9	Carbon dioxide	28	lb/gal	C	395
	50-00-0	Formaldehyde	3.5×10^{-6}	lb/gal	C	395
	83-32-9	Acenaphthene[b]	5.3×10^{-7}	lb/gal	E	35
	208-96-8	Acenaphthylene[b]	2.0×10^{-7}	lb/gal	E	35
	120-12-7	Anthracene[b]	1.8×10^{-7}	lb/gal	E	35
	205-99-2	Benzo(b)fluoranthene[b]	1.0×10^{-7}	lb/gal	E	35
	206-44-0	Fluoranthene[b]	4.4×10^{-8}	lb/gal	E	35
	86-73-7	Fluorene[b]	3.2×10^{-8}	lb/gal	E	35
	91-20-3	Naphthalene[b]	1.7×10^{-5}	lb/gal	E	35
	85-01-8	Phenanthrene[b]	4.9×10^{-6}	lb/gal	E	35
	129-00-0	Pyrene[b]	3.2×10^{-8}	lb/gal	E	35
		Dioxins				
	19408-74-3	1,2,3,7,8,9-HxCDD[b]	7.6×10^{-13}	lb/gal	E	35
	39227-28-6	1,2,3,4,7,8-HxCDD[b]	6.9×10^{-13}	lb/gal	E	35
		HxCDD[b]	6.2×10^{-12}	lb/gal	E	35
	35822-46-9	1,2,3,4,6,7,8-HpCDD[b]	1.5×10^{-11}	lb/gal	E	35
		HpCDD[b]	2.0×10^{-11}	lb/gal	E	35
	3268-87-9	OCDD[b]	1.6×10^{-10}	lb/gal	E	35
		Total PCDD	2.0×10^{-10}	lb/gal	E	35
		Furans				
		TCDF[b]	3.3×10^{-12}	lb/gal	E	35
		PeCDF[b]	4.8×10^{-13}	lb/gal	E	35
		HxCDF[b]	2.0×10^{-12}	lb/gal	E	35
		HpCDF[b]	9.7×10^{-12}	lb/gal	E	35
	67562-39-4	1,2,3,4,6,7,8-HpCDF[b]	3.5×10^{-12}	lb/gal	E	35
	39001-02-0	OCDF[b]	1.2×10^{-11}	lb/gal	E	35
		Total PCDF	3.1×10^{-11}	lb/gal	E	35
		Total PCDD/PCDF	2.3×10^{-10}	lb/gal	E	35

[a] Emission factor units are lb/gal of fuel consumed. To convert from pounds per standard cubic foot (lb/ft^3) to kilograms per standard cubic meter (kg/m^3), multiply by 16. To convert from lb/gal to kilograms per liter (kg/l), multiply by 0.12. CASRN = Chemical Abstracts Service Registry Number. SCC = Source Classification Code.

[b] Compound is classified as polycyclic organic matter, as defined in the 1990 Clean Air Act Amendments (CAAA). Total PCDD is the sum of the total tetra through octa dioxins; total PCDF is sum of the total tetra through octa furans; and total PCDD/PCDF is the sum of total PCDD and total PCDF.

Table 11.1-14. PREDICTIVE EMISSION FACTOR EQUATIONS FOR LOAD-OUT AND SILO FILLING OPERATIONS[a]

EMISSION FACTOR RATING: C

Source	Pollutant	Equation
Drum mix or batch mix plant load-out (SCC 3-05-002-14)	Total PM[b]	$EF = 0.000181 + 0.00141(-V)e^{((0.0251)(T + 460) - 20.43)}$
	Organic PM[c]	$EF = 0.00141(-V)e^{((0.0251)(T + 460) - 20.43)}$
	TOC[d]	$EF = 0.0172(-V)e^{((0.0251)(T + 460) - 20.43)}$
	CO	$EF = 0.00558(-V)e^{((0.0251)(T + 460) - 20.43)}$
Silo filling (SCC 3-05-002-13)	Total PM[b]	$EF = 0.000332 + 0.00105(-V)e^{((0.0251)(T + 460) - 20.43)}$
	Organic PM[c]	$EF = 0.00105(-V)e^{((0.0251)(T + 460) - 20.43)}$
	TOC[d]	$EF = 0.0504(-V)e^{((0.0251)(T + 460) - 20.43)}$
	CO	$EF = 0.00488(-V)e^{((0.0251)(T + 460) - 20.43)}$

[a] Emission factor units are lb/ton of HMA produced. SCC = Source Classification Code. To convert from lb/ton to kg/Mg, multiply by 0.5. EF = emission factor; V = asphalt volatility, as determined by ASTM Method D2872-88 "Effects of Heat and Air on a Moving Film of Asphalt (Rolling Thin Film Oven Test - RTFOT)," where a 0.5 percent loss-on-heating is expressed as "-0.5." Regional- or site-specific data for asphalt volatility should be used, whenever possible; otherwise, a default value of -0.5 should be used for V in these equations. T = HMA mix temperature in °F. Site-specific temperature data should be used, whenever possible; otherwise a default temperature of 325°F can be used. Reference 1, Tables 4-27 through 4-31, 4-34 through 4-36, and 4-38 through 4-41.

[b] Total PM, as measured by EPA Method 315 (EPA Method 5 plus the extractable organic particulate from the impingers). Total PM is assumed to be predominantly PM-2.5 since emissions consist of condensed vapors.

[c] Extractable organic PM, as measured by EPA Method 315 (methylene chloride extract of EPA Method 5 particulate plus methylene chloride extract of impinger particulate).

[d] TOC as propane, as measured with an EPA Method 25A sampling train or equivalent sampling train.

Table 11.1-15. SPECIATION PROFILES FOR LOAD-OUT, SILO FILLING, AND ASPHALT STORAGE EMISSIONS–ORGANIC PARTICULATE-BASED COMPOUNDS

EMISSION FACTOR RATING: C

Pollutant	CASRN[a]	Speciation Profile for Load-out and Yard Emissions[b] Compound/Organic PM[c]	Speciation Profile for Silo Filling and Asphalt Storage Tank Emissions Compound/Organic PM[c]
PAH HAPs			
Acenaphthene	83-32-9	0.26%	0.47%
Acenaphthylene	208-96-8	0.028%	0.014%
Anthracene	120-1207	0.070%	0.13%
Benzo(a)anthracene	56-55-3	0.019%	0.056%
Benzo(b)fluoranthene	205-99-2	0.0076%	ND[d]
Benzo(k)fluoranthene	207-08-9	0.0022%	ND[d]
Benzo(g,h,i)perylene	191-24-2	0.0019%	ND[d]
Benzo(a)pyrene	50-32-8	0.0023%	ND[d]
Benzo(e)pyrene	192-97-2	0.0078%	0.0095%
Chrysene	218-01-9	0.103%	0.21%
Dibenz(a,h)anthracene	53-70-3	0.00037%	ND[d]
Fluoranthene	206-44-0	0.050%	0.15%
Fluorene	86-73-7	0.77%	1.01%
Indeno(1,2,3-cd)pyrene	193-39-5	0.00047%	ND[d]
2-Methylnaphthalene	91-57-6	2.38%	5.27%
Naphthalene	91-20-3	1.25%	1.82%
Perylene	198-55-0	0.022%	0.030%
Phenanthrene	85-01-8	0.81%	1.80%
Pyrene	129-00-0	0.15%	0.44%
Total PAH HAPs		5.93%	11.40%
Other semi-volatile HAPs			
Phenol		1.18%	ND[d]

[a] Chemical Abstract Service Registry Number.
[b] Emissions from loaded trucks during the period between load-out and the time the truck departs the plant.
[c] Emission factor for compound is determined by multiplying the percentage presented for the compound by the emission factor for extractable organic particulate (organic PM) as determined from Table 11.1-14.
[d] ND = Measured data below detection limits.

Table 11.1-16. SPECIATION PROFILES FOR LOAD-OUT, SILO FILLING, AND ASPHALT STORAGE EMISSIONS–ORGANIC VOLATILE-BASED COMPOUNDS

EMISSION FACTOR RATING: C

Pollutant	CASRN	Speciation Profile for Load-Out and Yard Emissions	Speciation Profile for Silo Filling and Asphalt Storage Tank Emissions
		Compound/TOC[a]	Compound/TOC (%)[a]
VOC[b]		94%[b]	100%
Non-VOC/non-HAPs			
Methane	74-82-8	6.5%	0.26%
Acetone	67-64-1	0.046%	0.055%
Ethylene	74-85-1	0.71%	1.1%
Total non-VOC/non-HAPS		7.3%	1.4%
Volatile organic HAPS			
Benzene	71-43-2	0.052%	0.032%
Bromomethane	74-83-9	0.0096%	0.0049%
2-Butanone	78-93-3	0.049%	0.039%
Carbon Disulfide	75-15-0	0.013%	0.016%
Chloroethane	75-00-3	0.00021%	0.0040%
Chloromethane	74-87-3	0.015%	0.023%
Cumene	92-82-8	0.11%	ND[c]
Ethylbenzene	100-41-4	0.28%	0.038%
Formaldehyde	50-00-0	0.088%	0.69%
n-Hexane	100-54-3	0.15%	0.10%
Isooctane	540-84-1	0.0018%	0.00031%
Methylene Chloride	75-09-2	0.0%[d]	0.00027%
MTBE	596899	0.0%[d]	ND[c]
Styrene	100-42-5	0.0073%	0.0054%
Tetrachloroethene	127-18-4	0.0077%	ND[c]
Toluene	100-88-3	0.21%	0.062%
1,1,1-Trichloroethane	71-55-6	0.0%[d]	ND[c]
Trichloroethene	79-01-6	0.0%[d]	ND[c]
Trichlorofluoromethane	75-69-4	0.0013%	ND[c]
m-/p-Xylene	1330-20-7	0.41%	0.2%
o-Xylene	95-47-6	0.08%	0.057%
Total volatile organic HAPs		1.5%	1.3%

Table 11.1-16 (cont.)

[a] Emission factor for compound is determined by multiplying the percentage presented for the compound by the emission factor for total organic compounds (TOC) as determined from Table 11.1-14.

[b] The VOC percentages are equal to 100 percent of TOC minus the methane, acetone, methylene chloride, and 1,1,1-trichloroethane percentages.

[c] ND = Measured data below detection limits. Additional compounds that were not detected are: acrylonitrile, allyl chloride, bromodichloromethane, bromoform, 1,3-butadiene, carbon tetrachloride, chlorobenzene, chloroform, dibromochloromethane, 1,2-dibromoethane, 1,1-dichloroethane, 1,2-dichloroethane, 1,1-dichloroethene, cis-1,2-dichloroethene, trans-1,2-dichloroethene, 1,2-dichloropropane, cis-1,3-dichloropropene, trans-1,3-dichloropropene, 1,2-epoxybutane, ethyl acrylate, 2-hexanone, iodomethane, methyl methacrylate, 1,1,2,2-tetrachloroethane, 1,1,2-trichloroethane, vinyl acetate, vinyl bromide, and vinyl chloride

[d] Values presented as 0.0% had background concentrations higher than the capture efficiency-corrected measured concentration.

ATTACHMENT "G"

HHV FOR NATURAL GAS
DRY F-FACTOR

Table 3-D

EMISSION FEE BILLING NOx FACTORS

BASIC EQUIPMENT	TYPE OF FUEL	EMISSION FACTOR	HIGHER HEATING VALUE OF FUEL
Boilers,	Natural Gas	130 lb/mmscf	1050 mmBtu/mmscf
Ovens,	Refinery Gas	161 lb/mmscf	1150 mmBtu/mmscf
Heaters,	LPG, Propane, Butane	12.8 lb/mgal	94 mmBtu/mgal
Furnaces,	Diesel Light Dist. (0.05% S)	19 lb/mgal	137 mmBtu/mgal
Kilns,	Fuel Oil (0.1% S)	20 lb/mgal	150 mmBtu/mgal
Calciners,	Fuel Oil (0.25% S)	60 lb/mgal	150 mmBtu/mgal
Dryers	Fuel Oil (0.5% S)	55 lb/mgal	150 mmBtu/mgal
Internal	Natural Gas	3400 lb/mmscf	1050 mmBtu/mmscf
Combustion	LPG, Propane, Butane	139 lb/mgal	94 mmBtu/mgal
Engines	Gasoline	102 lb/mgal	130 mmBtu/mgal
	Diesel Oil	469 lb/mgal	137 mmBtu/mgal
Gas Turbines	Natural Gas	413 lb/mmscf	1050 mmBtu/mmscf
	Diesel Oil	67.8 lb/mgal	137 mmBtu/mgal

15.0 Waste Management [Reserved]

16.0 References [Reserved]

17.0 Tables, Diagrams, Flowcharts, and Validation Data

TABLE 19-1—CONVERSION FACTORS FOR CONCENTRATION

From	To	Multiply by
g/scm	ng/scm	10^9
mg/scm	ng/scm	10^6
lb/scf	ng/scm	1.602×10^{13}
ppm SO_2	ng/scm	2.66×10^6
ppm NO_X	ng/scm	1.912×10^6
ppm SO_2	lb/scf	1.660×10^{-7}
ppm NO_X	lb/scf	1.194×10^{-7}

TABLE 19-2—F FACTORS FOR VARIOUS FUELS[1]

	F_d		F_w		F_c	
Fuel Type	dscm/J	dscf/10^6Btu	wscm/J	wscf/10^6Btu	scm/J	scf/10^6Btu
Coal:						
Anthracite [2]	2.71×10^{-7}	10,100	2.83×10^{-7}	10,540	0.530×10^{-7}	1,97C
Bituminus [2]	2.63×10^{-7}	9,780	2.86×10^{-7}	10,640	0.484×10^{-7}	1,80C
Lignite	2.65×10^{-7}	9,860	3.21×10^{-7}	11,950	0.513×10^{-7}	1,91C
Oil [3]	2.47×10^{-7}	9,190	2.77×10^{-7}	10,320	0.383×10^{-7}	1,42C
Gas:						
Natural	2.34×10^{-7}	8,710	2.85×10^{-7}	10,610	0.287×10^{-7}	1,04C
Propane	2.34×10^{-7}	8,710	2.74×10^{-7}	10,200	0.321×10^{-7}	1,19C
Butane	2.34×10^{-7}	8,710	2.79×10^{-7}	10,390	0.337×10^{-7}	1,25C
Wood	2.48×10^{-7}	9,240			0.492×10^{-7}	1,83C
Wood Bark	2.58×10^{-7}	9,600			0.516×10^{-7}	1,92C
Municipal	2.57×10^{-7}	9,570			0.488×10^{-7}	1,82C
Solid Waste						

[1] Determined at standard conditions: 20 °C (68 °F) and 760 mm Hg (29.92 in Hg)

[2] As classified according to ASTM D 388.

[3] Crude, residual, or distillate.

TABLE 19-3—VALUES FOR $T_{0.95}$.

n[1]	$t_{0.95}$	n[1]	$t_{0.95}$	n[1]	$t_{0.95}$
2	6.31	8	1.89	22-26	1.71
3	2.42	9	1.86	27-31	1.7C
4	2.35	10	1.83	32-51	1.68
5	2.13	11	1.81	52-91	1.67
6	2.02	12-16	1.77	92-151	1.66

ATTACHMENT "H"

AP-42 CHAPTER 11.12-2

TABLE 11.12-2 (ENGLISH UNITS)
EMISSION FACTORS FOR CONCRETE BATCHING [a]

Source (SCC)	Uncontrolled				Controlled			
	Total PM	Emission Factor Rating	Total PM_{10}	Emission Factor Rating	Total PM	Emission Factor Rating	Total PM_{10}	Emission Factor Rating
Aggregate transfer [b] (3-05-011-04,-21,23)	0.0069	D	0.0033	D	ND		ND	
Sand transfer [b] (3-05-011-05,22,24)	0.0021	D	0.00099	D	ND		ND	
Cement unloading to elevated storage silo (pneumatic)[c] (3-05-011-07)	0.73	E	0.47	E	0.00099	D	0.00034	D
Cement supplement unloading to elevated storage silo (pneumatic)[d] (3-05-011-17)	3.14	E	1.10	E	0.0089	D	0.0049	E
Weigh hopper loading [e] (3-05-011-08)	0.0048	D	0.0028	D	ND		ND	
Mixer loading (central mix)[f] (3-05-011-09)	0.572 or Eqn. 11.12-1	B	0.156 or Eqn. 11.12-1	B	0.0184 or Eqn. 11.12-1	B	0.0055 or Eqn. 11.12-1	B
Truck loading (truck mix)[g] (3-05-011-10)	1.118	B	0.310	B	0.098 or Eqn. 11.12-1	B	0.0263 or Eqn. 11.12-1	B
Vehicle traffic (paved roads)	See AP-42 Section 13.2.1, Paved Roads							
Vehicle traffic (unpaved roads)	See AP-42 Section 13.2.2, Unpaved Roads							
Wind erosion from aggregate and sand storage piles	See AP-42 Section 13.2.5, Industrial Wind Erosion							

ND = No data

[a] All emission factors are in lb of pollutant per ton of material loaded unless noted otherwise. Loaded material includes course aggregate, sand, cement, cement supplement and the surface moisture associated with these materials. The average material composition of concrete batches presented in references 9 and 10 was 1865 lbs course aggregate, 1428 lbs sand, 491 lbs cement and 73 lbs cement supplement. Approximately 20 gallons of water was added to this solid material to produce 4024 lbs (one cubic yard) of concrete.

[b] Reference 9 and 10. Emission factors are based upon an equation from AP-42, section 13.2.4 Aggregate Handling And Storage Piles, equation 1 with k_{PM-10} =.35, k_{PM} = .74, U = 10mph, $M_{aggregate}$ =1.77%, and M_{sand} = 4.17%. These moisture contents of the materials ($M_{aggregate}$ and M_{sand}) are the averages of the values obtained from Reference 9 and Reference 10.

[c] The uncontrolled PM & PM-10 emission factors were developed from Reference 9. The controlled emission factor for PM was developed from References 9, 10, 11, and 12. The controlled emission factor for PM-10 was developed from References 9 and 10.

[d] The controlled PM emission factor was developed from Reference 10 and Reference 12, whereas the controlled PM-10 emission factor was developed from only Reference 10.

[e] Emission factors were developed by using the Aggregate and Sand Transfer Emission Factors in conjunction with the ratio of aggregate and sand used in an average yard^3 of concrete. The unit for these emission factors is lb of pollutant per ton of aggregate and sand.

[f] References 9, 10, and 14. The emission factor units are lb of pollutant per ton of cement and cement supplement. The general factor is the arithmetic mean of all test data.

[g] Reference 9, 10, and 14. The emission factor units are lb of pollutant per ton of cement and cement supplement. The general factor is the arithmetic mean of all test data.