Draft Plan of Development – Revision 1
Rising Tree Wind Farm

(Formerly Bent Tree Wind Farm)

SUBMITTED TO BLM

BY RISING TREE WIND FARM LLC

Original: July 12, 2010
Revision 1: December 10, 2010

RISING TREE WIND FARM

Horizon Wind Energy
An EDP Renewables Company

Contents

1 Acronyms & Definitions 3
2 Project description 6
A. Introduction 6
B. Proponent's Purpose and Need for the Project 9
C. General Facility Description, Design, and Operation 12
D. Other Federal, State and Local Agency Permit Requirements 25
E. Financial and Technical Capability of Applicant 27
3 Construction of Facilities 29
A. WTG Design, Layout, Installation, & Construction Processes 29
B. Geotechnical Studies 31
C. Project Phasing 32
D. Access & Transportation System, Component Delivery, Worker Access 32
E. Construction Work Force Numbers, Vehicles, Equipment, & Timeframes 33
F. Site Preparation, Surveying, and Staking 34
G. Site Preparation, Vegetation Removal, and Treatment 35
H. Site Clearing, Grading, and Excavation 35
I. Gravel, Aggregate, Concrete Needs & Sources 36
J. Wind Turbine Assembly and Construction 37
K. Electrical construction activities 38
L. Aviation Lighting 39
M. Site Stabilization, Protection, & Reclamation Practices 39
4 Related Facilities and Systems 41
A. Transmission System Interconnection 41
B. Meteorological Towers 42
C. Other Related Systems 42
5 Operations and Maintenance 43
A. Operation and Facility Maintenance Needs 43
B. Maintenance Activities 43
C. Operations Workforce, Equipment, & Ground Transportation 44
6 Environmental Considerations 45
A. General Description of Site Characteristics and Potential Environmental Issues 45
B. Design Criteria Proposed by Applicant 61
7 References 72

List of Tables & Figures

Figure 2-1: Bent Tree Wind Farm Project Area 6
Figure 2-2: Map of Project Area 13
Figure 2-3: Typical WTG Dimensions 17
Figure 2-4: Typical WTG Nacelle 17
Figure 2-5: Typical WTG Tower Section 18
Figure 2-6: WTG Erection 19
Figure 2-7: Nacelles Awaiting Erection in Laydown Yard 22
Figure 3-1: WTG at Horizon's Existing Wind Farm 29
Figure 3-2: Typical Spread Foot Foundation 30
Figure 3-3: Tower Being Installed on Foundation 30
Figure 3-4: Equipment Being Delivered to Construction Area 32
Figure 3-5: Applying Road Aggregate 33
Figure 3-6: WTG Rotor Awaiting Erection 36

Figure 3-7: Rotor Being Installed on WTG 37
Figure 3-8: Typical Project Substation 38
Figure 5-1: O&M Building in Oklahoma 43
Figure 6-1: Typical Decibel Levels of Common Noise Sources 67

Table 2-1: Permitting Schedule (Delayed milestones shown in red) 7
Table 2-2: Study Schedule 7
Table 2-3: Construction Schedule 8
Table 2-4: Maximum/Minimum Turbine Dimensions 15
Table 2-5: Maximum/Minimum Collection Line Dimensions 15
Table 2-6: Maximum/Minimum Substation Dimensions 15
Table 2-7: Maximum/Minimum O&M Areas 15
Table 2-8: Met Tower Dimensions 16
Table 2-9: Maximum/Minimum Transmission Line Dimensions 16
Table 2-10: Maximum/Minimum Lay-down Yard Dimensions 16
Table 2-11: Potential Permits, Reviews and Approvals Needed 26
Table 2-12: Summary of Horizon Project Experience 28
Table 3-1: List of General Construction Equipment 33
Table 6-1: Approximate Vegetation Communities and Cover Types within Project Area 45
Table 6-2: Potential for Occurrence of Federally Listed Species 48
Table 6-3: Potential for Occurrence of State-Listed Species 49
Table 6-4: Potential for Occurrence of BLM Sensitive Species 53
Table 6-5: Potential for Occurrence of Sensitive Plant Communities 55
Table 6-6: Composite Construction Site Noise Levels 61

List of Attachments

Attachment A Legal Description of Project Area
Attachment B Preliminary Project Map
Attachment C 2005-06 Avian Use Report
Attachment D 2008-09 Bat Report
Attachment E Baseline Survey Plan for Wildlife and Plants

1 Acronyms & Definitions

- ACEC (Area of Critical Environmental Concern) – designation given by the BLM to indicate areas of environmental or cultural sensitivity.
- ACOE (Army Corps of Engineers)
- Applicant – Bent Tree Wind Farm LLC, a wholly owned subsidiary of Horizon Wind Energy LLC.
- BMP (Best Management Practices)
- BOP (Balance of Plant) – refers to all other project facilities and infrastructure besides wind turbines such as roads, electrical collection system, substation(s), and O&M Building.
- CDCAP (California Desert Conservation Area Plan)
- CDFG (California Department of Fish and Game)
- CEQA (California Environmental Quality Act)
- CESA (California Endangered Species Act)
- CNDDB (California Natural Diversity Database)
- CNPS (California Native Plant Society)
- COD (Commercial Operations Date) – the date on which the Project will begin generating electricity.
- Collection Line – An electrical line, often times buried below the ground surface that distributes electricity at a voltage of less than 69 kiloVolts.
- DOD (Department of Defense)
- EA (Environmental Assessment) - An environmental analysis prepared pursuant to NEPA to determine whether a federal action would significantly affect the environment and thus require a more detailed environmental impact statement.
- EDPR – Energias de Portugal Renovaveis, or EDP Renewables, the parent company of Horizon Wind Energy LLC.
- EIR (Environmental Impact Report) – A document prepared by a state agency to meet its obligations under CEQA.
- EIS (Environmental Impact Statement) - A document, prepared by a federal agency, on the environmental impact of its proposals for major actions that significantly affect the quality of the human environment.
- ESA (Endangered Species Act)
- FAA (Federal Aviation Administration)
- GHG (Greenhouse Gas)
- Horizon – Horizon Wind Energy LLC, the parent company of Applicant.

- LADWP (Los Angeles Department of Water and Power)
- Met towers – meteorological towers that are used to test for wind speed and direction.
- NEPA (National Environmental Policy Act)
- NHPA (National Historic Preservation Act)
- NPDES (National Pollution Discharge Elimination System) - a provision of the Clean Water Act that prohibits discharge of pollutants into waters of the United States unless a special permit is issued by EPA, a state, or another delegated agency.
- OHV (Off-Highway Vehicle)
- PCT (Pacific Crest Trail)
- POD (Plan of Development) – This document, being prepared in support of a Type III ROW Application for development of a wind farm on BLM-administered land.
- PPA (Power Purchase Agreement) – a contract between an electricity generator and electricity supplier for the purchase of power generated.
- Project – The proposed wind farm, located approximately 3 miles east of Mojave, CA.
- Project Area – The area that will encompass the Project, shown in Figure 2-2.
- ROW (Right-of-Way) – One of three types of permissions granted by the BLM to install facilities on BLM-administered land.
- SCADA (Supervisory Control and Data Acquisition) - allows for remote control monitoring of individual turbines and the wind plant as a whole from both the central host computer and from a remote PC.
- SCE (Southern California Edison)
- SHPO (State Historical Preservation Office)
- SPCC (Spill Prevention Control and Countermeasure) Plan – a plan developed by Applicant to comply with the provisions of 40 CFR 112.
- SWPPP (Storm Water Pollution Prevention Plan) - document which identifies sources and activities at a particular facility that may contribute pollutants to storm water and commits the operator to specific control measures and time frames to prevent or treat such pollutants.
- Transmission Feeder Line – Applicant-owned proprietary transmission line that connects the Applicant-owned facilities to the electrical grid.
- TRTP (Tehachapi Renewable Transmission Project) – A 500 kV transmission line currently being developed by SCE. The Project will interconnect at the Windhub Substation, which is the northern terminus of this line.
- USFWS (United States Fish and Wildlife Service)
- VRM (Visual Resource Management)
- WMP (West Mojave Plan)

- WSA (Wilderness Study Area) – areas deemed as potentially suitable for wilderness designation.
- WTG (Wind Turbine Generator)

2 PROJECT DESCRIPTION

A. Introduction

This Draft Plan of Development (POD) for the Rising Tree Wind Farm ("Project"; formerly Bent Tree Wind Farm) is being submitted by Rising Tree Wind Farm LLC ("Applicant"), a wholly-owned subsidiary of Horizon Wind Energy LLC ("Horizon"), who is in turn a wholly-owned subsidiary of EDP Renewables (EDPR), a global leader in the renewable energy sector. Applicant's initial Type II Right-of-Way (ROW) application ("Application CACA-46978") was submitted approximately six years ago in March 2004 and was granted in August 2010 by the Bureau of Land Management (BLM) Ridgecrest Field Office.

The level of environmental analysis required under the National Environmental Policy Act (NEPA) for individual wind energy projects is determined at the BLM Field Office level. The Project-specific NEPA analysis would be tiered to the *Final Programmatic Environmental Impact Statement (PEIS) on Wind Energy Development on BLM-Administered Lands in the Western United States* and outlined in the *Record of Decision* (ROD) *for Implementation of a Wind Energy Development Program and Associated Land Use Plan Amendments* (BLM 2005). The project-specific analysis, tiered on the Wind Energy PEIS, would focus on the critical, site-specific issues of concern. The ROD establishes policies and Best Management Practices (BMPs) for wind energy development activities on BLM-administered lands and establishes minimum requirements for mitigation measures.

Facility Type and Generation Capacity

Applicant proposes the construction, operation, maintenance and end-of-project decommissioning of a wind-driven electric power generation project and associated transmission lines, access roads and related facilities, upon private land and public land administered by the BLM.

Figure 2-1: Bent Tree Wind Farm Project Area

The Project would include the installation of up to 100 horizontal-axis turbines. The largest turbine nameplate capacity currently anticipated is 3.0 megawatts[1] (MW). Please see Section 2.C for details on size of proposed equipment.

Proposed Project Schedule

Tables 2-1 through 2-3 below presents Applicant's proposed schedule, broken down by development activities (permitting and land acquisition) and construction activities. Applicant anticipates beginning construction in the 1st quarter of 2012 with a commercial operation date (COD) of October 2012 in order to take advantage of American Recovery

[1] A watt is the basic unit used to measure electric power. A kilowatt (kW) equals 1,000 watts and a megawatt (MW) equals 1,000 kW or 1 million watts.

and Reinvestment Act incentives. A significant portion of the Project is located on private land not under jurisdiction of BLM or subject to NEPA. If Applicant receives approval for said private portion prior to receiving a Record of Decision under NEPA, Applicant will proceed with construction of facilities on private land prior to constructing facilities on federal land.

Table 2-1: Permitting Schedule (Delayed milestones shown in red)

TASK/MILESTONE	TIMELINE
Receive Type II ROW Grant	June 2010
Submit Draft POD	July 2010
BLM Review Draft POD	July - August 2010
BLM/Applicant/Kern County NEPA/CEQA Permitting Kick-Off Meeting	Original: August 2010 Revised: December 2010
Submit Final POD and Type III ROW Application	Original: September 2010 Revised: December 2010
NEPA Notice of Intent posted in the Federal Register	Original: October 2010 Revised: February 2010
Submit Zoning Application to Kern County	Original: October 2010 Revised: November 2010
Public Scoping Process	Original: November 2010 – January 2011 Revised: January – February 2011
Draft Joint EIS/EIR Preparation	February 2011 – July 2011
Draft Joint EIS/EIR Public Review	July 2011 – September 2011
Final Joint EIS/EIR Preparation	September 2011 – November 2011

Table 2-2: Study Schedule

TASK/MILESTONE	TIMELINE
Past Wildlife Studies Completed	
Avian Point Count Surveys Round 1	November 2006
Raptor Nest Surveys Round 1	November 2006
Acoustic Bat Surveys	August 2009
Raptor Nest Surveys Round 2	May 2010
Desert Tortoise Survey	May 2010
Special Status Plant Survey	June 2010
Burrowing Owl Survey	June 2010
Wildlife Studies Currently Underway or Planned	
Pedestrian Cultural Resources Survey	September 2010
Avian Point Count Surveys Round 2	January 2011
Baseline Noise Analysis	February 2011

Wetlands Delineation	February 2011
Mohave Ground Squirrel Survey	May 2011
Non-Wildlife Studies	
Wind Resource Assessment	April 2007 – October 2012
Cultural Resources	December 2010 – February 2011
Wetlands	January 2011 – March 2011

Table 2-3: Construction Schedule

TASK/MILESTONE	**TYPICAL START OR DURATION**
Long-Lead Equipment Procurement	12-24 months
Road Construction Begins	9-12 months
Foundation Construction Begins	8-11 months
Electrical System Construction Begins	7-10 months
Wind Turbine Assembly and Erection Begins	6-9 months
Wind Turbine Commissioning Begins	3-6 months
Commercial Online Date	**October 2012**

B. Proponent's Purpose and Need for the Project

This Draft POD is submitted to the BLM in response to the national demand for more renewable energy, the BLM's wind energy development program, and the State of California's mandate for renewable energy.

The Project Area is one of the most appropriate in the Ridgecrest District for a wind farm. It is bordered to the west and north by existing wind farms, to the south by a recently approved wind farm under construction, and to the east by the Los Angeles Aqueduct. The Project Area has been heavily subdivided, and the presence of existing development, including transmission lines, results in significant existing land degradation. A wind farm would provide the highest and best use of the land. Other sites in the Ridgecrest District were not chosen because of several factors including proximity to Areas of Critical Environmental Concern (ACEC), proximity to Wilderness or Wilderness Study Areas (WSA), distance from high-voltage transmission lines, and insufficient wind resource.

The following Project objectives present distinct advantages over other sites that may be considered in this region of California:

- Sufficient wind resource;
- Proximity to adequate transmission facilities;
- Existing development in the surrounding area, thereby minimizing land use conflicts;
- Sufficient access to public highways, transporter routes, and existing road network in the Project Area;
- and Geographic separation (over 10 miles) from the nearest WSA or ACEC as identified in the West Mojave Plan (WMP)

Purpose

The purpose of the Project is to develop a wind energy generating facility with the capability of accommodating up to 100 horizontal-axis wind turbine generators with individual nameplate capacity of up to 3.0 MW in an area with high wind resource value, in close proximity to transmission, with minimal environmental impact. Wind-generated electricity has the potential to provide renewable electricity to homes and businesses without causing air pollution or consuming large amounts of finite resources. Wind energy is fueled by the kinetic energy of the wind, which is continually regenerated through atmospheric processes. Specifically, wind energy relies on frequent, strong winds to turn the blades of power-generating turbines.

Wind energy has no fuel costs, and as such its operating costs are significantly lower than those of power produced from fossil fuels. Conversely, its capital costs are greater. In the United States, a wind turbine with generating capacity of 1.5 MW can generate approximately 4.5 million kilowatt-hours (kWh)[2] of electricity in a year, enough to serve the needs on average of 375 to 450 U.S. households.

The completion of the Project would continue Applicant's commitment to building the highest quality wind energy projects in appropriate areas and to developing strong

[2] Electricity production and consumption are measured in kilowatt-hours, while generating capacity is measured in kilowatts or megawatts. If a power plant that has 1,000 kW (1 MW) of capacity operates nonstop during all 8,760 hours in the year, it will produce 8,760,000 kWh (8,760 MWh). An average U.S. household consumes roughly 10,000 kWh per year. However, on average, wind turbines typically operate the equivalent of less than 45 percent of the peak (full load) hours in the year due to the variability of wind.

working relationships with utilities, landowners, and local communities where projects are developed. Lastly, construction, operation, and implementation of the Project would respond to the national demand for more renewable energy and the mandate from many western states for increased renewable energy.

Applicant has the following specific objectives in mind for the Project:

- Realize the full potential of the wind resource on land within the Tehachapi Wind Resource Area;
- Assist California in meeting its legislated Renewables Portfolio Standard for the generation of renewable energy in the state;
- Offset the need for additional electricity generated from fossil fuels and assist the state in meeting its air quality goals and reduce greenhouse gases as mandated by Assembly Bill 32;
- Increase the tax base of Kern County;
- Increase local short-term and long-term employment opportunities;
- Boost business activity for the area during construction and operations and provide economic benefits for local businesses;
- Minimize site disturbance to the extent possible by locating the site near existing access routes, near existing or proposed electrical transmission infrastructure; and on land with appropriate topography and existing disturbed area;
- Use land located near existing wind farms to minimize the environmental and visual impact of the Project;
- and, use state-of-the-art horizontal axis WTG technology to achieve increased performance, lower cost, higher reliability, and longer service life.

Need

The need for this Project is reflected in numerous State and Federal policies promoting renewable and wind energy development. Wind energy projects have environmental and economic benefits, providing clean domestic energy, diversifying the country's energy resource portfolio, creating local jobs, and strengthening the regional economy. There is an established federal record showing the national need for wind energy projects as well as State directives to meet renewable energy goals:

1. The BLM Wind Energy PEIS of 2005 presented the agency's approach for managing wind energy development on BLM-administered public lands. The BLM's Wind Energy Development Program is a comprehensive approach to ensure that potential adverse environmental impacts to public lands are minimized to the extent possible and that the numerous public benefits derived from using these energy sources are realized.
2. The Energy Policy Act of 2005 (P.L. 109-58). Section 211 states, "It is the sense of the Congress that the Secretary of the Interior should, before the end of the 10-year period beginning on the date of enactment of this Act, seek to have

approved non-hydropower renewable energy projects located on the public lands with a generation capacity of at least 10,000 megawatts of electricity."

3. President Executive Order (E.O.) 13212 (2001), "Actions to Expedite Energy-Related Projects," established a policy that federal agencies should take appropriate actions, to the extent consistent with applicable law, to expedite projects to increase the production, transmission, or conservation of energy.

4. In 2001, the National Energy Policy Development Group recommended to the President, as part of the National Energy Policy, that the Departments of the Interior, Energy, Agriculture, and Defense work together to increase renewable energy production.

5. To address increased interest in wind energy development and to implement the National Energy Policy recommendation to increase renewable energy production, the BLM established a wind energy development program. This program, which included the amendment of multiple land use plans, supported the directives of E.O. 13212, the recommendations of the National Energy Policy, and Congressional direction provided in the Energy Policy Act of 2005 regarding renewable energy development on public lands.

6. The Energy Information Administration, DOE, states in the Annual Energy Outlook 2006 with projections to 2030 (February 2006) that total electricity demand is projected to grow by 1.6 percent per year from 2004 through 2030. About 8 percent of the expected capacity expansion is expected to consist of renewable generation units to meet this increased demand.

7. In 2004, the Western Governors' Association set a goal of developing 30,000 MW of clean energy by 2015 from traditional and renewable energy sources (Policy Resolution 04-13, June 2004). This goal was reaffirmed in 2006 by Policy Resolution 06-10, Clean and Diversified Energy for the West (Western Governors' Association, 2006).

8. In September 2006 SB 107 was signed by California Governor Arnold Schwarzenegger, accelerating the State Renewable Portfolio Standard and requiring all retail sellers of electricity to procure at least 20% of the total electricity sold from eligible renewable resources by 2010.

9. In September 2009, Governor Schwarzenegger signed Executive Order S-21-09, directing the California Air Resources Board to adopt regulations increasing California's Renewable Portfolio Standard to 33 percent by 2020.

10. In March 2010, Governor Schwarzenegger, accompanied by Department of the Interior Secretary Ken Salazar, signed Senate Bill 8X 34, aiming to streamline the permitting and siting of sustainable energy projects in California.

Benefit

The Project would be compatible with the management principles identified in the California Desert Conservation Area Plan, as Amended (CDCAP). Specifically, the Project would "respond to national priority needs for resource use and development…including such paramount priorities as energy development…without compromising the basic desert resources." (BLM 1980) The Project would create clean energy and help to meet the national need for new energy sources, while keeping harmful pollutants out of the air, soil and water systems.

Environmental Benefits

Wind energy is a renewable and non-polluting source of electricity. Electricity generated from wind energy does not produce emissions, and as a result does not contribute to acid rain and snow, global climate change, smog, mercury contamination, water withdrawal, or particulate-related health effects. According to a recent report entitled "Comparison of Reported Effects and Risks to Vertebrate Wildlife from Six Electricity Generation Types in the New York/New England Region" by the New York State Energy Research and Development Authority (2009), wind energy offers the lowest life cycle impact to wildlife populations. In addition, unlike most other electrical generation sources, wind turbine generators do not consume water or require additional fuel sources. Lastly, construction and operation of the Project is a low-impact, non-extractive source of electrical generation, typically resulting in disturbance to only about 2-5 percent of the lands within the defined Project Area.

Economic Benefits

Wind farms also help to raise the standard of living of local populations, by adding local jobs and boosting the local tax base. Development of the Project carries significant potential economic benefits, including creation of new jobs and businesses, increased *ad valorem* taxes, and new dollars supporting the local economy. While providing positive benefits to the local economy, the Project will have minimal impacts on communities and their infrastructure. The Project is expected to create between 200 and 250 temporary construction jobs and approximately 16 full time operations personnel.

The Project will generate distinct and positive economic impacts during both construction and operation phases. Specifically, development and construction will result in a short-term surge in economic spending activity, while operation will produce long-term economic benefits to local communities. Both sources of regional economic stimuli will result in increased output, income, and employment in Kern County.

The primary local economic impacts associated with the introduction of new business activity spurred by energy development are increased employee compensation (wages and salaries exclusive of withholdings), purchases made by new businesses, and taxes paid to local governments. The local economic impact is directly proportional to the number of local businesses that are able to supply the needs of the employees and the Project in general.

C. General Facility Description, Design, and Operation

The proposed Project would consist of the following components, some of which would be constructed on private land exclusively. These components are detailed in the sections that follow.

Project Component	**Potential for Occurrence on BLM Land**
Wind Turbine Generators (WTGs) and associated foundations and step up transformers.	Likely
Permanent meteorological (met) towers	Not anticipated
Turbine access roads	High likelihood
A collector cable system (likely 34.5 kV) – primarily underground, with possible overhead lines, as needed	High likelihood

220-kV overhead radial transmission feeder lines to interconnect to the Southern California Edison (SCE) Windhub Substation located approximately one mile west of the Project Area	Not anticipated
Project substation(s) and associated switching station	Not anticipated
An operations and maintenance facility	Not anticipated
Temporary and permanent laydown and storage yards	Not anticipated
Concrete batch plant	Not anticipated
Fencing in accordance with Section 19.64.140(c) of the Kern County Zoning Ordinance	Potentially (pending county requirements)

While Applicant has conducted extensive wind measurements and wildlife surveys of the Project Area, exact facility locations will depend upon results of site-specific geotechnical investigations, cultural resources surveys, wetland delineations, and species-specific wildlife investigations, as well as any other siting considerations raised during the NEPA process.

Project Location, Land Ownership, and Jurisdiction

Figure 2-2: Map of Project Area

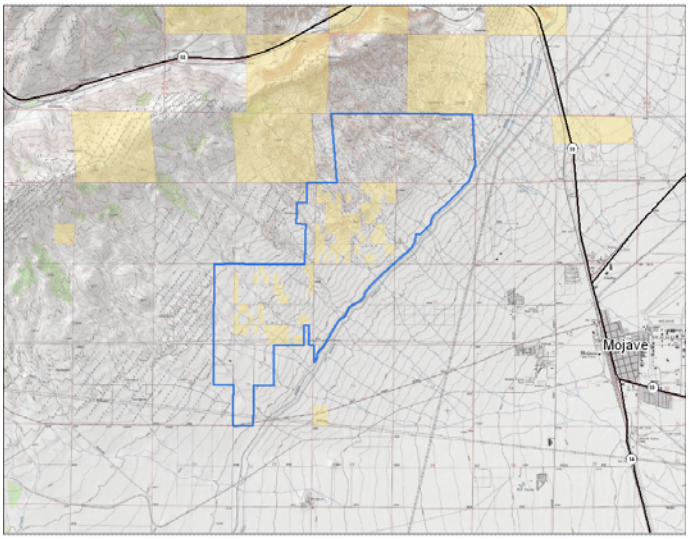

The proposed Project Area can be seen in Figure 2-2 and is located approximately 3 miles west of the town of Mojave, CA in southeastern Kern County. The Project Area consists of approximately 3,460 heavily subdivided acres of which 527 are managed by the BLM. Sections 2 and 10 were subdivided in conjunction with federal land grants in the 1950s, with 5-acre tracts being the most common parcel size. Many of the 5-acre privately-owned tracts have small dwellings, abandoned vehicles, and rubbish; only about 10% of the dwellings are still occupied.

Applicant currently leases or owns a significant proportion of the proposed Project Area and is in negotiation with private landowners for the remaining amount. The Project footprint would permanently occupy approximately 2-5% of the total Project Area. In addition to permanent disturbance, the Project is expected to temporarily disturb approximately 7% of the total Project Area. These percentages are based on Applicant's past experience designing and constructing over 3,000 MW of wind farms throughout the country. Large areas of open, undeveloped land will exist between the individual turbines. This space is necessary for the free-flow of wind, which results in efficient, safe, long-term operation of the wind turbines.

The Project Area is surrounded by existing wind farms to the west and north, and an approved wind farm to the south is currently under construction. The Los Angeles Aqueduct constitutes the

eastern edge of the Project Area. The Project Area is bordered to the south by Oak Creek Road, which has provided adequate construction access to a number of existing wind farms in the Tehachapi area. The Project Area has an energetic wind resource, access to high voltage transmission lines and good transportation access.

Elevations in the Project Area range from approximately 3,150 to 3,651 feet. The Project is situated on the lower slopes of Cameron Ridge and the Horned Toad Hills, which has a maximum elevation of over 4,800 feet. The southern portion of the Project Area is relatively flat while the northern portion is more topographically diverse, with a number of ridges oriented northwest-southwest.

The Project falls under the jurisdiction of the BLM Ridgecrest Field Office, within the California Desert District. The Project is not located within any areas designated as ACECs or WSAs. Additionally, the Project will come under the jurisdiction of Kern County, which will serve as lead agency in developing an Environmental Impact Report (EIR) under the California Environmental Quality Act (CEQA). Amendments to the County Zoning Ordinance, and possible additional land use amendments will be necessary.

Legal Description

An aliquot-parts legal description of the BLM land located within the Project Area as well as Assessor's Parcel Numbers (APNs) of all other private land is provided as Attachment A.

Total Acreage and General Dimensions of Facility Components

Applicant has presented two separate alternatives with this POD. The alternatives will be determined to a large extent by land lease negotiations on the private land surrounding BLM land. Alternative A presents an ideal layout assuming all private land is signed within the overall Project Area. Alternative B presents the layout submitted to Kern County on November 18th in conjunction with Applicant's application for Zone Change and reflects current land position.

The Project footprint would occupy the following total acreages based on the aforementioned alternatives. These acreages assume that each turbine has a 50ft tower diameter, as well as a 40ft x 60ft crane pad, 80% of which will remain permanently. It assumes all roads will be 22ft wide with 12ft compacted shoulders.

Alternative A

	Turbines	**Roads**	**Collector Lines**
BLM	10 turbines	3.85 miles	3.85 miles
BLM Temporary	24.3 acres	5.6 acres	1.4 acres
BLM Permanent	0.9 acres	10.3 acres	0 acres
BLM Total	**25 acres**	**15.9 acres**	**1.4 acres**
Private	90 turbines	19.61 miles	19.61 miles
Private Temporary	218.9 acres	28.5 acres	7.1 acres
Private Permanent	8 acres	52.3 acres	0 acres
Private Total	**227 acres**	**80.81 acres**	**7.13 acres**

Alternative B

	Turbines	Roads	Collector Lines
BLM	12 turbines	3.15 miles	3.15 miles
BLM Temporary	29.2 acres	4.6 acres	1.5 acres
BLM Permanent	1.1 acres	8.4 acres	0 acres
BLM Total	**30.3 acres**	**13 acres**	**1.1 acres**
Private	66 turbines	15.1 miles	15.1 miles
Private Temporary	160.6 acres	22 acres	5.5 acres
Private Permanent	5.9 acres	40.3 acres	0 acres
Private Total	**166.5 acres**	**62.2 acres**	**5.5 acres**

While facilities and Project components are discussed in greater detail in the sections below, the following dimensions are representative of the typical wind energy project. For wind turbines, the dimensions will depend on the turbine model and manufacturer, which has not yet been chosen. The following table shows the possible range of minimum and maximum turbine dimensions:

Table 2-4: Maximum/Minimum Turbine Dimensions

Dimension	Minimum	Maximum
Hub Height (HH)	65 meters (213 feet)	94 meters (308 feet)
Tip Height (TH)	100 meters (328 feet)	150 meters (493 feet)
Rotor Diameter	70 meters (300 feet)	112 meters (368 feet)

Dimensions of the overhead collector lines, where necessary, will depend on terrain and topographic constraints. Where the ground is flat, collector poles can be spaced farther apart.

Table 2-5: Maximum/Minimum Collection Line Dimensions

Dimension	Minimum	Maximum
Pole Height	25 feet	50 feet (in rare cases taller such as at ravine crossings)
Distance between poles	250 feet	300 feet

The step-up substation and off-site interconnection switchyard will be surrounded by a graveled, fenced area with transformer and switching equipment inside a control building and an area to park utility vehicles. The lightning rod that protects essential electrical equipment is the tallest structure on the substation at 60 feet.

Table 2-6: Maximum/Minimum Substation Dimensions

Dimension	Minimum	Maximum
Occupied Area	5 acres	10 acres
Equipment height	50 feet	60 feet (lightning rod)

The dimensions presented for the Operations & Maintenance (O&M) building include the building itself and associated uses such as an employee parking area.

Table 2-7: Maximum/Minimum O&M Areas

Dimension	Minimum	Maximum
Occupied Area	2 acres	5 acres
Building height	15 feet	30 feet

The height of the permanent met towers will correspond with the hub height of the ultimate turbine model chosen for use at the Facility.

Table 2-8: Met Tower Dimensions

Dimension	Minimum	Maximum
Hub Height	65 meters (213 feet)	94 meters (308 feet)

For the transmission feeder line, pole height will vary depending on span, terrain, and electrical sag considerations. The pole design for the transmission feeder line has not yet been chosen but is expected to be either a wooden H-frame pole or a steel monopole. Transmission lines will have a minimum ground clearance of 30 feet, which takes into account maximum line sag.

Table 2-9: Maximum/Minimum Transmission Line Dimensions

Dimension	Minimum	Maximum
Pole Height	65 feet	120 feet
Distance between poles	300 feet	1,200 feet

The Project will also likely consist of a number of construction lay-down yards. One permanent lay-down yard will be centrally located to accommodate equipment deliveries during operations, and will consist of up to 10 acres. Other temporary lay-down yards will be located next to each turbine to assist in tower erection and blade hanging. The size of these areas, as shown below, will vary depending on the type of turbine used.

Table 2-10: Maximum/Minimum Lay-down Yard Dimensions

Dimension	Minimum	Maximum
Central laydown yard	5 acres	10 acres
Turbine laydown yards	1.2 acres	2.4 acres

Figure 2-3: Typical WTG Dimensions

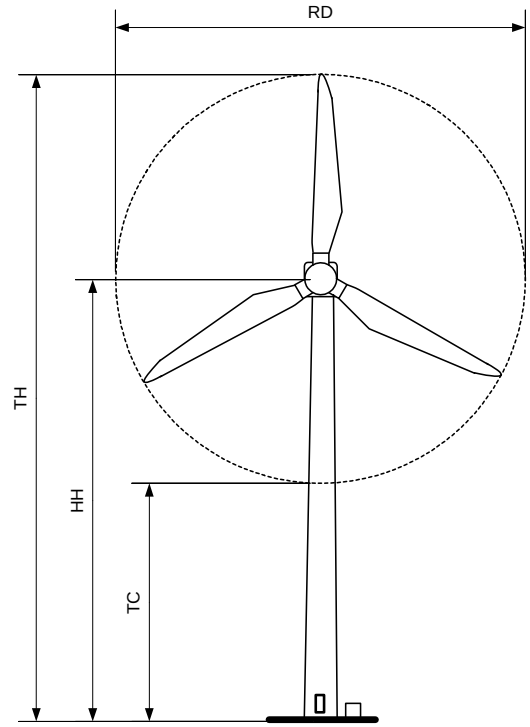

	MAX	MIN
HH: Hub Height	94m (308 ft)	65m (213 ft)
RD: Rotor Diameter	112m (328 ft)	70m (229 ft)
TC: Tip Clearance	60m (197 ft)	30m (98 ft)
TH: Tip Height	150m (493 ft)	100m (328 ft)

Number and Size of Wind Turbines

The Project would include the installation of up to 100 turbines likely ranging in size from 1.5 MW to 3.0 MW. Depending on the alternative chosen, up to 12 turbines are expected on BLM land, The Project is in the development process and as such current turbine plans are preliminary and subject to change pending final land control, geotechnical investigation, pedestrian cultural resource survey, wetlands delineation, and species-specific wildlife studies.

All turbines will be three-bladed, upwind, horizontal-axis wind turbines with an approximate rotor diameter of between 70 and 112 meters. The turbine rotor and nacelle are expected to be mounted on top of a tubular tower between approximately 65 and 94 meters high. The size and number of wind turbines to be used for the Project will vary, depending on a number of factors including wind turbine economics and turbine model market availability at the time of construction. Final turbine siting, spacing, and clear areas would be established in accordance with environmental constraints identified through the NEPA and CEQA processes as well as industry standards and safety measures.

A chart showing minimum and maximum WTG dimensions is included as Figure 2-3. Regardless of ultimate turbine size used on the Project, Applicant will undergo final obstruction evaluation with the Federal Aviation Administration (FAA), and conform to any height limitations identified during that process. Additionally, the Kern County Zoning Ordinance encourages

Figure 2-4: Typical WTG Nacelle

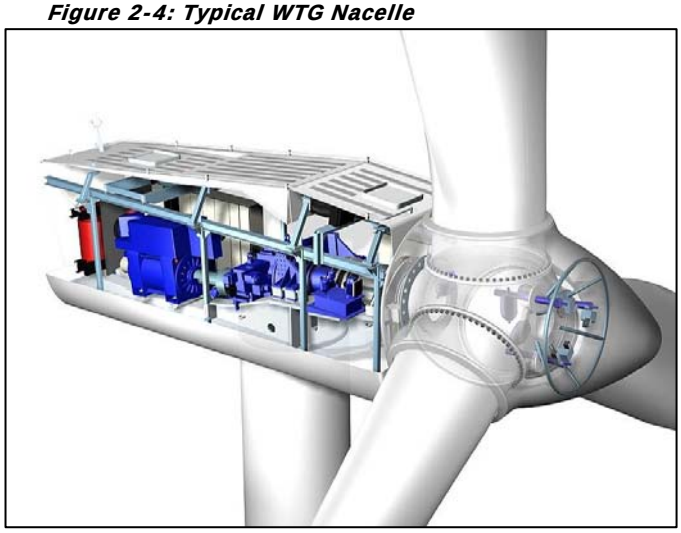

turbines in the Project Area to be limited to 500 ft in height in order to avoid DOD consultation.

WTG Components

The WTG tower is a tubular conical steel structure that is manufactured in multiple sections depending on the tower height. Towers for the Project will be fabricated, delivered and erected in 3 or 4 sections each.

The nacelle houses the main mechanical components of the WTG. The nacelle consists of a robust machine platform mounted on a roller bearing sliding yaw ring that allows it to rotate to keep the turbine pointed into the wind to maximize energy capture. A wind vane and anemometer are mounted at the rear of the nacelle to signal the controller with wind speed and direction information. The main components inside the nacelle are the drive train, the gearbox, and the generator. On some turbines, the step-up transformer is situated at the rear of the nacelle that eliminates the need for a pad-mounted transformer at the base of the tower.

Figure 2-5: Typical WTG Tower Section

The nacelle is housed by a fully-enclosed, steel-reinforced fiberglass or an all steel shell that protects internal machinery from the environment and dampens noise emissions. The shell is designed to allow for adequate ventilation to cool internal machinery such as the gearbox and generator.

The modern WTGs under consideration for the Project have 3-bladed rotors. The rotor blades turn quite slowly; typically less than 20 RPM. The rotor blades are typically made from a glass-reinforced polyester composite similar to that used in the marine industry for sophisticated racing hulls. Much of the design and materials experience comes from both the marine and aerospace industries and has been developed and tuned for wind turbines over the past 25 years. The blades are non-metallic, but are still equipped with a sophisticated lightning suppression system.

The rotor blades are all bolted to a central hub. The hub is bolted to the main shaft on a large flange at the front of the nacelle. The main shaft is independently supported by the main bearing at the front of the nacelle. The rotor transmits torque to the main shaft that is coupled to the gearbox. The gearbox increases the rotational speed of the high speed shaft that drives the generator at 1200-1800 RPM to provide electrical power at 60 Hertz (Hz).

Turbine Control Systems

Wind turbines are equipped with sophisticated computer control systems which constantly monitor variables such as wind speed and direction, air and machine temperatures, electrical voltages, currents, vibrations, blade pitch and yaw angles, etc. The main functions of the control system include nacelle operations as well as power operations. Generally, nacelle functions include yawing the nacelle into the wind, pitching the blades, and applying the brakes if necessary. Power operations controlled at the bus cabinet inside the base of the tower include operations of the main breakers to engage the generator with the grid as well as control of ancillary breakers and

systems. The control system is always running and ensures that the machines are operating efficiently and safely.

WTG Configuration and Layout

A Project map and preliminary site plan is included in Attachment B and includes the largest expected potential turbine layout; however, due to the Project being in the early stages of development, this map should be considered preliminary and is subject to change based on land acquisition, further geo-technical investigations and constraints analysis. Applicant has identified "facility construction zones" of potential impact, within which new roads, transmission lines, or turbine strings may be proposed.

Substations, Transmission Lines, Access Roads, Buildings, and Parking Areas

Substation and Transmission Lines

No substations or interconnection facilities are expected on BLM land. The Project will require an on-site step-up substation to increase – or "step up" – power to the appropriate transmission voltage. This power will then be delivered to the interconnection switchyard via an overhead transmission feeder line. The main functions of the substation and interconnection facilities are to provide fault protection and to step up the voltage from the collection lines to the transmission level required to interconnect to the utility grid. The basic elements of the substation and interconnection facilities are a control house, a main transformer, outdoor breakers, relaying equipment, high voltage bus work, steel support structures, and overhead lightning suppression conductors. All of these main elements are typically installed on concrete foundations that are designed for the soil conditions at the substation sites. Transformers will be non-polychlorinated biphenyl oil-filled types, such as mineral oil.

Figure 2-6: WTG Erection

Roads

Access to turbines will be over graveled access roads. New site access roads are designed to allow for heavy equipment to be transported to the Project and are used throughout the life of the Project to allow access to and from wind turbines, substations, and met towers. The Project's site access roads will be designed to meet BLM and County standards and will be maintained by Applicant over the life of the Project. Wherever practical, existing roads will be used to minimize new ground disturbance. Road and civil construction work will comply with a detailed storm water pollution prevention plan (SWPPP) and BMPs.

Currently, approximately 43 miles of existing roads are within the Project Area, most of these being unmaintained dirt roads of varying widths. Applicant expects that the Project will include up to approximately 24 miles of access roads, of which approximately 6.7 miles will be upgrades to existing roads. Up to approximately 4 miles of access road are expected to be on or directly adjacent to BLM land. In addition to the permanent access roads, temporary access roads or areas might be required for construction of some facilities.

Project access roads that will be used for equipment deliveries during construction and operations, but not for crane travel, will be designed to a total width of 22 feet, with 16-foot wide graveled surface and three-foot wide compacted shoulders. The crane travel paths used during construction will be improved to a total width of 40 feet in most areas, with a 16-foot wide graveled surface, and 12-foot compacted shoulders to accommodate the width of the largest potential crane. In a small number of cases (if at all), such as turns or non-flat surfaces, roads may be up to 42 feet wide for safety reasons. In areas of steeper grades, a cut and fill design may be implemented to keep grades below 14% to help prevent potential erosion issues and to comply with BLM standards. At the completion of construction all roads will be restored to 16-foot wide gravel roads with compacted shoulders to accommodate potential maintenance requiring crane travel. The temporarily disturbed areas will be revegetated as required.

O&M Building

An O&M facility will be located on the Project site, likely in close proximity to the primary access point along Oak Creek Road, and will include a main building with offices, spare parts storage, restrooms, a shop area, outdoor parking facilities, a turnaround area for larger vehicles, outdoor lighting and a gated access with perimeter fencing. The O&M facility is not expected to be located on BLM land. The O&M building will consist of up to 10,000 square feet and is expected to be built on private land. The O&M facility is a permitted use in an exclusive agriculture zoning district and as such Applicant's ability to construct the O&M facility will depend on Kern County's determination of zone change request. The O&M facility is expected to have up to 65 regular parking spaces and 3 handicap parking spaces.

Ancillary Facilities

Meteorological towers are addressed below in Section 4B.

Temporary and Permanent Lay-down Yard

During construction, staging and temporary storage of construction equipment, cables, electrical facilities, foundation parts, components, towers, blades, nacelles and other materials occurs on-site. Temporary use and lay-down yards are utilized for short-term staging and assembly of tower sections, nacelles, and rotors during the erection of the WTGs. Temporarily disturbed land areas are typically restored following construction.

Each temporary lay-down yard, including if needed for an on-site batch plant or rock crusher, may be covered with gravel. The gravel will be removed from temporary lay-down yards and the area restored after construction has been completed.

Currently, Terragen is using 60 acres of private land within Section 15 of Township 11N Range 13W within the Project Area for a lay-down yard during construction of the Alta-Oak Creek Wind Farm. If this land is available during construction of the Project, it could potentially be used by Applicant, causing no additional land disturbance. The permanent lay-down yard is not anticipated on BLM land, although temporary lay-down yards may be located on BLM land.

Concrete Batch Plant

The Project will use one temporary mobile batch plant. Typically, an area of 5 to 8 acres is needed for an on-site concrete batch plant. The batch plant is not expected to be located on BLM land.

Water Usage, Amounts, and Sources

The large majority of water use will occur during construction for dust control and concrete. Very little water is used during operations and in the O&M building. Applicant will work with local authorities to determine the proper source of water for construction needs.

During construction, it is estimated that roughly 1.3 million gallons of water will be required for each 1 mile of access road based on Applicant's past experience. If the Project entails 24 miles of access road, 31.2 million gallons of water may be required during the construction season. Peak day demand for construction water usage could reach 150,000 gallons per day. However, the actual amount of water applied daily for road watering is highly dependent on weather and varies between construction phases (i.e. road building, turbine erection, etc.).

During operations, for the O&M building water supply, a licensed well driller would install a potable water well. The well would be installed consistent with County, State, and BLM standards. Water will be provided in the O&M building for normal domestic use, such as drinking and showering. Typical water usage during operations is generally on the order of only a couple hundred gallons per day at maximum, and likely less than 100 gallons per day.

Erosion Control and Stormwater Drainage

Erosion control measures for the Project may include reseeding of all road cuts or related temporary bare road areas resulting from Project construction activities. An appropriate mix of native vegetation or other vegetation suited to the area will be identified in consultation with the BLM during the NEPA process.

Surface Runoff Pollution during Construction

Applicant typically proposes to develop and implement, as required by the National Pollutant Discharge Elimination System (NPDES) General Stormwater Permit for Construction Activities, a detailed SWPPP to minimize the potential for discharge of pollutants from the site during construction.

Surface Runoff Pollution during Operations.

The primary risk of surface runoff during operations comes from the increased impermeable area related to roads. To reduce this potential during Project design, Applicant will conduct a field analysis of wetlands and waters of the U.S. within the Project and will avoid these areas to the extent practicable. Typically, WTGs are sited on elevated areas, which avoids disturbance of low-lying hydric land. If roads must cross such areas, the Applicant will minimize impacts, as much as possible, and obtain necessary permits from the Army Corps of Engineers.

Operations personnel will be responsible for monitoring the SWPPP measures that were implemented during construction to ensure they continue to function properly. The permanent BMPs will be incorporated into the final construction plan and specifications prepared by the engineering team's civil design engineer. An operations manual for the permanent BMPs will be prepared by the BOP Contractor civil design engineer and the Project's engineering team. The permanent storm water BMPs will include permanent erosion and sedimentation control through site landscaping, grass, and other vegetative cover.

Operational BMPs will be adopted, as part of the SWPPP, to implement good housekeeping,

preventive and corrective maintenance procedures, steps for spill prevention and emergency cleanup, employee training programs, and inspection and record keeping practices, as necessary, to prevent storm water pollution. Examples of good operational housekeeping practices, which will be employed by the Project, include:

- Prompt cleanup and removal of any spillage;
- Restricting vehicle travel to access roads;
- Regular pickup and disposal of garbage and rubbish;
- Regular sweeping of floors; and
- Proper storage of containers.

Operations personnel will periodically review the SWPPP against actual practice. The Operations Manager will ascertain that the controls identified in the plan are adequate, and that employees are following them. A summary of these in-house compliance inspections will be kept with the SWPPP, along with any notifications and reports of non-compliance items or areas. After the land disturbing activities are complete and the site has been finally stabilized, O&M will terminate coverage under the permit by completing and submitting a Notice of Termination form.

Vegetation Treatment and Weed Management

A discussion of federal-listed, state-listed, and BLM sensitive plants can be found in Section 6. Applicant will conform to required measures pertaining to botanical resources as determined in the NEPA/CEQA environmental review process, and addressed further below as part of the Environmental Considerations Section.

Weed Management

Through the NEPA process, Applicant, in consultation with the appropriate Kern County and BLM weed specialists, will develop a plan for control of noxious weeds and invasive species that could occur as a result of new surface disturbance activities at the Project Area.

Typically-proposed weed control measures include: the cleaning of all off-road equipment, use of certified "weed free" straw bales, re-vegetating disturbed ground with mixed perennial grasses, and treating new gravel roads with residual herbicides, a regular monitoring program and chemical control measures.

The plan will incorporate the BLM Field Office Weed Management Plan (if available) and address monitoring and methods for treating infestations and use of certified weed-free mulching. Use of pesticides or herbicides will be within the framework of BLM policies and entail only the use of Environmental Protection Agency (EPA)-registered pesticides and herbicides.

Figure 2-7: Nacelles Awaiting Erection in Laydown Yard

Waste and Hazardous Materials Management

A variety of non-hazardous, inert construction wastes are typically generated in small quantities during construction. The major solid waste types are concrete waste from turbine foundation construction and wood waste from wood forms used for concrete construction. Some additional wastes could include erosion control

materials, such as straw bales and silt fencing, and packaging materials for turbine parts and electrical equipment. This inert construction waste is typically accumulated on site in dumpsters and/or drop boxes until hauled away to a licensed landfill.

The Project is expected to generate minimum to zero hazardous waste during construction and will operate as a conditionally exempt small quantity generator.

During operations, the Project will utilize very limited amounts of hazardous materials. Potentially hazardous materials that may be used at the Project include lubricating oils, cleaners, and herbicides. The types, amounts, and uses of lubricants and cleaners at a wind project make accidental releases of any significant quantities unlikely. These materials will be used primarily during operations but potentially during construction, as well. These hazardous materials will be stored in accordance with applicable regulations.

Potentially hazardous materials to be used during O&M of the WTGs and associated facilities may include mineral oils (turbine lubricant and transformer coolant), synthetic oils (turbine lubricant and gear oil), general lubricants, general cleaners, ethylene glycol (anti-freeze), vehicle fuel, herbicides for weed control, non-empty aerosol cans (estimated at less than ten cans per year), and incidental and occasional use of solvents (estimated to be less than 2 to 3 gallons per year). Universal waste streams include minimal quantities of spent batteries and fluorescent lamps. These materials will be stored at the O&M building.

Solid waste generation during operations will be minimal (on the order of one dumpster per week) and thus there will be no significant impact to local solid waste facilities. The only other source of solid waste will be incidental waste from repair and/or replacement of equipment. An onsite O&M building generally has a separate underground on-site septic system and drain field or is serviced by a licensed and bonded portable sanitary service.

Disposal of materials onsite will be conducted in accordance with all applicable regulations. Applicant will use a SPCC plan prepared by a qualified environmental professional.

Fire Protection

Prior to construction, a Fire Protection and Prevention Plan will be developed and implemented in coordination with the BLM, the local Fire Department, and other appropriate agencies. The Fire Protection and Prevention Plan will be enforced both during construction and operations.

Fire risk mitigation starts with project design, especially electrical design, which will comply with National Electric Code (NEC) and National Fire Protection Agency (NFPA) requirements. The Project site roads will act as firebreaks and also provide for quick access of fire trucks and personnel in the event of a fire.

Generally speaking, the highest expected fire risk in this area of California is usually that of a brush fire during the hot, dry summer season. Fire risk potential is tracked constantly and reported during the summer fire season and the risk potential will be actively monitored and posted at the construction job site during the high fire risk season. The Project's construction manager and operations manager will be responsible for staying abreast of fire conditions during construction and operations, respectively, and implementing any necessary fire precautions accordingly.

Site Security and Fencing

The Kern County Zoning Ordinance requires that each WTG and appurtenant facilities be fenced to restrict public access. Fencing may also be placed around the perimeter of the Project Area. Due to the complicated and heavily parceled land characteristics in the Project Area, it may not be possible to surround the entire Project Area with fencing and individual fencing of facilities will be needed. However, Applicant will ensure that all facilities are appropriately fenced. This could entail fencing each individual WTG or rows of WTGs to allow access for landowners in the Project Area. Permanent fencing will also be installed around electrical substations and any other sensitive equipment.

Spill Prevention and Containment

Disposal of materials on site will be conducted in accordance with all applicable regulations. Applicant will implement a Spill Prevention and Control Countermeasure plan (SPCC) prepared by a qualified environmental professional prior to construction.

The following steps are typically followed to minimize impacts in the event of a spill.

- Spills are contained and cleaned up immediately after discovery, consistent with all local, state and federal regulations.
- Spills are immediately communicated to the Site Manager during construction and retirement, and to the Operations Manager during operations. If applicable, spills will be documented and reported to the appropriate agencies.
- Materials and equipment needed for cleanup procedures are kept readily available on the site, either at the equipment storage area in the O&M building or on contractor's trucks. The lay-down yard will serve as the equipment storage area during construction and the O&M building will store equipment during operations. Equipment to be kept on the site will include, but not be limited to: brooms, dust pans, shovels, granular absorbents, sand, saw dust, absorbent pads and booms, plastic and metal trash containers, gloves, and goggles.
- Designated personnel on the site are trained to implement clean-up procedures and are made aware of the location of spill cleanup equipment.
- Spills are documented and a record of the spills is kept in an electronic database.

Health and Safety Program

Applicant and its subcontractors will comply with all applicable local, state, and federal safety, health, and environmental laws, ordinances, regulations, and standards. Some of the main laws, ordinances, regulations, and standards designed to protect human health and safety that would be reflected in the design, construction, and operation of the Project include:

- Occupational Safety and Health Act of 1970 (29 USC 651, et seq.) and 29 CFR 1910, Occupational Safety and Health Standards;
- Americans with Disabilities Act, for ADA accessibility at the O&M Building;
- Uniform Fire Code Standards;
- Uniform Building Code;
- National Fire Protection Association, which provides design standards for the requirements of fire protection systems;

- National Institute for Occupational Safety and Health, which requires that safety equipment carry markings, numbers, or certificates of approval for stated standards;
- National Electric Safety Code;
- American Concrete Institute Standards;
- American Institute of Steel Construction Standards;
- American Society for Testing and Materials;
- National Electric Code.

Applicant will comply with all safety requirements set forth through the NEPA process.

D. Other Federal, State and Local Agency Permit Requirements

Environmental Review

Applicant will undertake CEQA and NEPA environmental review. In accordance with the CEQA process, an Environmental Impact Report (EIR) will be prepared with Kern County likely serving as lead agency. In accordance with the NEPA process, an Environmental Assessment (EA) – tiered off the Wind Energy Development Programmatic Environmental Impact Statement (EIS) – or Project-specific EIS will be prepared with the BLM serving as lead agency. The type of document to be prepared will be determined in conjunction with discussion of this Draft POD. Under these acts, agencies are required to identify the potential environmental impacts of a project and determine whether the identified impacts are "significant."

A Memorandum of Understanding between Kern County and the BLM will likely be prepared to allow the agencies to develop a joint EIS/EIR to serve the requirements of CEQA and NEPA. The EIS/EIR prepared for the development and operation of a wind energy project on BLM and private lands will address issues raised during public scoping and will be prepared in accordance with the CEQA and NEPA statutes. The BLM and Applicant may jointly contact certain agencies, property owners, and other stakeholders early in the planning process to identify potentially sensitive land uses and issues, rules that govern wind energy development locally, and land use concerns specific to this Project.

The BLM as the lead federal agency will be responsible for conducting the government-to-government and agency consultation necessary for permitting and NEPA compliance for this Project. Applicant will participate in those consultations as much as possible and as appropriate. A partial list of agencies expected to be consulted includes: U.S. Fish and Wildlife Service (USFWS), Federal Aviation Administration, Department of Defense (DOD) and Department of Homeland Security (DHS), ACOE as well as the appropriate state agencies, such as the California Department of Fish and Game (CDFG), the State Historic Preservation Office (SHPO), and the Kern County Planning Division. Additionally, Applicant will consult with affected Native American tribes and tribal agencies as appropriate.

Required Permits

The following table outlines other permits potentially needed to construct the Project:

Table 2-11: Potential Permits, Reviews and Approvals Needed

Regulatory Authority	Permit/Approval Type	Trigger(s)
Kern County	Conditional Use Permit for Batch Plant	Installation of a batch plant in Kern County.
	Zone change to Exclusive Agriculture with Wind Energy Overlay	Construction of wind energy projects in Kern County requires a Wind Energy overlay zone. Additionally, Applicant will propose an underlying zone change to Agriculture to bring the zoning classification into conformance with the county's general plan.
California Dept of Fish and Game	CA Endangered Species Act Permitting	Any development that has potential to affect threatened and endangered species. Determination will be based off Applicant's baseline wildlife studies currently underway.
	Lake and Streambed Alteration Program	a. Diversion, obstruction, or change in the natural flow of the bed, channel, or bank of any river, stream, or lake. b. Use of material from streambed. c. Disposal or deposition of debris, waste or other material where it can pass into any river, stream, or lake. d. Any proposed discretionary project that might have significant environmental effects
California Office of Historic Preservation	Consultation	a. Any project on federal lands. b. Construction on any state-owned land or land owned by any political subdivision of the state. c. Any project on tribal lands or lands with religious importance to Native American tribes.
Regional Water Quality Control Board	General Permit for Discharges of Storm Water Associated with Construction Activity	Projects that disturb 1 or more acres of soil
	NPDES Wastewater Permit	If a concrete batch plant discharges to a U.S. surface water body.
	General Industrial Storm Water Permit	For discharge of storm water associated with operation of concrete batch plant.
	Waste discharge requirements	If a concrete batch plant discharges to water of the State
Kern County Air Pollution Control District	General Permit Application Form	Concrete batch plant set up temporarily in the district for more than one year
	Authority to Construct	Building, altering or replacing any equipment which may cause the issuance of air contaminants.
	Permit to Operate	Any new or modified equipment or any existing equipment.
	Statewide Portable Equipment Registration Program	Concrete batch plant set up for under a year.

Kern County Environmental Health Services Department	Water Well Permit	Installation of O&M water well.
US Army Corps of Engineers	Clean Water Act Section 404 Permit	Required for projects that discharge dredged or fill material into waters of the US, including wetlands. Permit rigor will depend on number of acres disturbed.
U.S. Fish and Wildlife Service	Section 7 Endangered Species Act Consultation	Potential impacts to federally listed species.
Federal Aviation Administration	Notice of Proposed Construction or Alteration (Form 7460)	Erection of all turbines/structures over 200 feet tall.
	Determination of No Hazard	
U.S. Environmental Protection Agency	SPPCC Plan	Exceedance of aggregate aboveground storage capacity of 1,320 gallons
U.S. Bureau of Land Management	Right-of-Way grants for Transportation and Utility Systems and Facilities on Federal Lands	Any development on BLM lands

Status of Permits

The only permitting activity currently in process is Applicant's Application for a Type II ROW grant for a project area testing and monitoring grant. Applicant has not yet submitted an application for zone change and conditional use permit to Kern County, but expects to submit this application in late 2010. Applicant has begun a number of wildlife studies in preparation for undertaking the permitting effort.

In late 2009, Applicant submitted a preliminary Form 7460 to the FAA, which has issued preliminary "determinations of no hazard" with height limitation up to 475 ft for a preliminary 75-WTG layout.

Development Timeline

The Project is in the beginning stages of development. Please refer to Table 2-1 for a general permitting schedule anticipated at this time. This schedule will be subject to frequent revision and refinement throughout the development process. Applicant anticipates that all permit approvals will be obtained by early 2012 to allow for COD by October 2012.

E. Financial and Technical Capability of Applicant

Based in Houston, Texas, with over 20 offices and over 20 wind farms across the United States, Horizon Wind Energy has developed more than 3,400 MW and operates over 2,800 MW of wind farms. Horizon is owned by EDP Renewables (EDPR), a global leader in the renewable energy sector. Currently, EDPR is the world's fourth largest wind energy company in terms of installed capacity.

Throughout its history, Horizon has gone through several stages and business models. The Company began in 1998 as a "build-transfer" developer known as Zilkha Renewable Energy, followed by a period of ownership by Goldman Sachs as a "developer-owner-operator" beginning in 2005. Horizon was then acquired on July 2, 2007 by Energias

de Portugal, S.A. (EDP), the parent company of EDPR, a vertically integrated utility company. Through its various constituent businesses, EDP holds significant electricity and gas operations in Europe, Brazil, and the United States.

Leveraging the experience of Horizon's management team and success of EDPR's international renewable initiatives has positioned the Project to succeed in the maturing wind industry. The table below provides a summary of Horizon's operating assets and some of the projects that have been recently executed.

Table 2-12: Summary of Horizon Project Experience

Project Name	Location	COD	Capacity (MW)	Horizon Owned MW	Developed	Constructed	Operated
Tierras Morenas	Costa Rica	Jun-99	24	-	✓	✓	
Madison	NY	Oct-00	12	-			✓
Somerset	PA	Oct-01	9	-	✓	✓	
Top of Iowa	IA	Nov-01	80	12	✓	✓	✓
Mill Run	PA	Nov-01	15	-	✓	✓	
Meyersdale	PA	Nov-03	30	-	✓		
Blue Canyon I	OK	Dec-03	74	19	✓	✓	✓
Blue Canyon II	OK	Dec-05	151	151	✓	✓	✓
Maple Ridge I	NY	Jun-06	231	116	✓	✓	✓
High prairie I	MN	Dec-06	99	-	✓		
Wild Horse I	WA	Dec-06	229	-	✓	✓	
Maple Ridge II	NY	Dec-06	91	45	✓	✓	✓
Twin Groves I	IL	Jun-07	198	198	✓	✓	✓
Lone Star I	TX	Oct-07	200	200	✓	✓	✓
Elkhorn Valley	OR	Dec-07	101	101	✓	✓	✓
Prairie Star	MN	Nov-07	101	101	✓	✓	✓
Lone Star II	TX	Jan-08	200	200	✓	✓	✓
Twin Groves II	IL	Feb-08	198	198	✓	✓	✓
Meridian Way I	KS	Nov-08	105	105	✓	✓	✓
Meridian Way II	KS	Nov-08	96	96	✓	✓	✓
Rattle Snake RD	OR	Dec-08	103	103	✓	✓	✓
Pioneer Priaire I	IA	Dec-08	198	198	✓	✓	✓
Pioneer Prairie II	IA	Feb-09	102	102	✓	✓	✓
Wheat Field	OR	Mar-09	97	97	✓	✓	✓
Meadow Lake I	IN	Oct-09	200	200	✓	✓	✓
Blue Canyon V	OK	Oct-09	100	100	✓	✓	✓

3 CONSTRUCTION OF FACILITIES

A. WTG Design, Layout, Installation, & Construction Processes

Wind Turbine Design and Layout

Because the Project is in an early stage of development, the Project map and site plan presented in Attachment B is only preliminary and is subject to change based on final land control, geotechnical investigations and further constraints analysis. Applicant will identify "facility construction zones" of potential impact, within which new roads, transmission lines, or turbine strings may be proposed. The facility construction zones will serve as the basis for wildlife and cultural surveys.

Regardless of the turbine selected, the area impacted by the Project will remain roughly similar. This is because the size of a WTG is directly proportional to its spacing (i.e. larger WTGs must be spaced at a greater distance from each other to optimally capture wind energy). For example, a project layout for a 3MW machine would use a smaller number of larger machines over the same area used for a layout based on the use of a 1.5 MW machine. Therefore, the turbine and facility construction zones represented in the accompanying project facility construction zone map are expected to adequately encompass the final turbine layout. In addition, the turbine and facility construction zones include alternate road and transmission routes.

Figure 3-1: WTG at Horizon's Existing Wind Farm

The Project design will make use of the latest generation of turbines, which tend to be larger, more widely spaced and rotate at lower revolutions per minute (RPM) than those used in earlier projects installed in the 1980's and 1990's. Equipment being used reflects design refinements made by industry designers intended to minimize aesthetic impacts to the landscape. Other design elements used to minimize impacts will include:

- Neutral colors for turbines;
- Tapered monopole steel towers instead of lattice towers;
- Low-reflectivity finish for turbine surfaces;
- Underground (vs. overhead) electric collection lines where practicable;
- Fewer, larger turbines versus use of more, smaller ones.

Figure 3-2: Typical Spread Foot Foundation

Turbine Foundations

During the detailed engineering design phase of the Project, prior to construction, a formal geotechnical investigation will be performed to analyze soil and sub-surface conditions, which Applicant recognizes may require BLM authorization prior to any drilling or soil boring. Depending on the results of the geotechnical investigation, either a spread footing type foundation or a vertical mono-pier foundation will be used. Figure 3-2 shows a typical spread footing foundation being constructed. The foundation design will be tailored to suit the soil and subsurface conditions at the individual turbine sites. The foundation design will be certified by an experienced and qualified state-registered structural engineer.

Each turbine would require permanent ground disturbance for the tower foundation and pad-mounted transformer and a graveled fire break/access road around each tower.

Construction Processes

Project construction will be performed in several stages and will generally include the following main elements and activities, generally listed in order of activity:

- Grading of the field construction office and lay-down yard, O&M and substation areas;
- Construction of site roads, turn-around areas and crane pads at each wind turbine location;
- Construction of the turbine tower concrete foundation, step-up substation and interconnect switchyard foundations and transformer pads; installation of 2-3 permanent meteorological towers;
- Installation of the electrical collection system – underground and some overhead lines;
- Assembly and erection of the wind turbines;
- Construction and installation of the step-up substation and interconnect switchyard;
- Plant commissioning and energization.

Figure 3-3: Tower Being Installed on Foundation

Applicant may enter into contract agreements for the construction of the Project, including an agreement for the supply, erection and commissioning of the wind turbines as well as an engineering, procurement and construction (EPC) contract for the

construction of the balance of plant (BOP) which includes all other project facilities and infrastructure such as the roads, electrical collection system, substation(s), O&M Facility, etc.

Timetable and sequence of construction

Construction of the Project may begin after securing the necessary approvals/permits and interconnection and transmission agreements. It is expected that Project construction will occur over a period of approximately 8-10 months from the time of permit approval and signing of a power purchase agreement and will require the involvement of between 200 and 250 construction personnel.

A typical 100MW project construction schedule summary, showing the major tasks and key milestones, is included above in Table 2.3. These estimates reflect reasonable assumptions based on the currently available data and Applicant's experience developing and constructing projects throughout the U.S. For wind energy projects, the longest lead-time items are typically the substation transformers and wind turbines, usually requiring from 8-12 months from time of order to delivery.

These long lead-time items will be ordered to support the final construction schedule. The turbine vendor and model selection will be determined on the qualifications of vendors and development of detailed site engineering and meteorological analyses.

B. Geotechnical Studies

Before construction can commence, during preliminary engineering, a site survey will be performed to stake out the exact location of the wind turbines, site roads, electrical cables, access entryways from public roads, substation areas, and other improvements. Once the surveys are complete, and permit is approved, a detailed geotechnical investigation will be performed to identify subsurface conditions which will dictate much of the design work of the roads, foundations, underground trenching and electrical grounding systems. Applicant recognizes that drilling or soil boring will require BLM authorization through a Finding of No Significant Impact (FONSI). The geotechnical investigations will be permitted through an extension of Horizon's ROW grant (CACA-46978). Geotechnical studies are generally done at the 20% and 100% engineering completeness stages. At the 20% stage, general samples are taken along the facility construction zones. At the 100% stage, the final layout must be known.

The geotechnical investigation is anticipated to utilize a drill rig which would drill test bores to identify the subsurface soil and rock types and strength properties by sampling and lab testing. Testing is also done to measure the soil's electrical and thermal resistivity to ensure proper electrical transmission and grounding system design. The full geotechnical investigation is expected to include approximately four sample borings per mile along the access roads, one boring for each transmission line support structure, two borings per substation, and one test boring per turbine site. Additional borings could be drilled for ancillary facilities such as electrical substations and an O&M building. At another 10 locations, soil samples would be taken for study of the site's thermal resistivity. Each of these 10 samples would be approximately one cubic foot in volume. Engineers will use this data to recommend foundation design for the proposed wind turbines. Turbine foundations will also conform to the turbine manufacturer's specifications.

C. Project Phasing

Applicant anticipates this Project will be constructed as one phase and as such will follow a similar construction timeline as that outlined in Table 2-3. However, a significant portion of the Project is located on private land not under jurisdiction of NEPA. If Applicant receives approval for said private portion prior to receiving a Record of Decision under NEPA, Applicant will proceed with construction of facilities on private land prior to constructing facilities on federal land. Applicant is currently contemplating a future project phase on Section 34 of Township 12N Range 13W, but timing for the development of this phase is currently unknown.

D. Access & Transportation System, Component Delivery, Worker Access

Construction of the Project will require improving and widening some existing roads and constructing new roads to provide access for construction vehicles and delivery of turbine components and other equipment used during construction. The Project will also require temporary lay-down yards during construction for the delivery and staging of wind turbine components and other equipment as well as the staging of trailers for the construction crews.

Figure 3-4: Equipment Being Delivered to Construction Area

It is expected that primary turbine and equipment delivery route will be along Oak Creek and Tehachapi Willow Springs Road from State Highway 58. These routes have been used as turbine delivery routes for existing projects and are not expected to need significant upgrades.

Prior to construction, Applicant will develop a ground transportation plan for the transport of turbine components, main assembly cranes, and other large pieces of equipment. The goal of the transportation plan is to minimize hazards resulting from the increased truck traffic and adverse impacts on traffic flow. This plan may incorporate measures such as informational signs, flaggers when equipment may result in blocked throughways, and traffic cones to identify any necessary changes in temporary lane configuration. The plan will address the impact of construction and operational activities on the current traffic on local roads. The roads in the plan may include, but will likely not be limited to State Route (SR) 14, SR 58, Tehachapi Willow Springs Road, and Oak Creek Road. The plan will consider expected vehicle widths, weights and speeds and unique handling requirements, and evaluate alternative transportation approaches. The plan will also comply with state requirements and all necessary transport permits will be obtained.

Construction workers are expected to travel to the site from various locations throughout southern California, and the number of workers expected to relocate to the surrounding area is not expected to be substantial. If temporary housing should be necessary, it is expected that accommodations would be available in the nearby communities of Rosamond, Tehachapi, Mojave, Lancaster and/or Palmdale.

In accordance with the Kern County General Plan's Circulation Element, it is likely that Kern County will require 55-ft land dedications along section lines and 45-ft dedications along half-section lines, however road construction will be allowed within these dedication areas. Installation of underground collection lines may also be installed within these dedication areas, but would require a franchise agreement with the

county. It is expected that the turning radius at the proposed access point on Oak Creek Road will accommodate equipment delivery, but this will be field verified by a qualified construction engineer.

Applicant intends to upgrade and use existing roads where safe and practicable and where doing so will not result in unneeded environmental impact. New roads will be designed and constructed to the appropriate standard and be no larger than necessary to accommodate their intended functions. On-site access roads will be surfaced with aggregate materials and will be sized appropriately for their intended use.

Figure 3-5: Applying Road Aggregate

Special attention will be given to transportation activities on all roads used by Applicant to minimize adverse impacts on traffic flow. Project personnel and contractors shall be instructed in appropriate safe driving practices including adherence to speed limits commensurate with road types, traffic volumes, vehicle types, and site-specific conditions. Safe and efficient traffic flow will be a priority. Construction traffic will be restricted to roads suitable for construction vehicles and will be designed per the latest version of the Manual of Uniform Traffic Control Devices.

E. Construction Work Force Numbers, Vehicles, Equipment, & Timeframes

Applicant will employ between 200 and 250 people for Project Construction. Based on Applicant's experience with other projects, a significant percentage of the construction workers will be hired locally and the remainder will come from outside the local area. Specialized workers will be hired for specialized construction activities (e.g., substation and electrical transmission construction, turbine erection, turbine testing).

Turbine assembly and erection involves the use of large truck or track mounted cranes, smaller rough terrain cranes, boom trucks, rough terrain fork-lifts for loading and off-loading materials and equipment, flat bed and low-boy trucks for transporting materials to site.

Table 3-6 below identifies some of the construction equipment to be used during Project construction.

Table 3-1: List of General Construction Equipment

Equipment	**Construction Use**
Backhoe/Trenching Machines	Excavating Foundations, Trenches for Underground Utilities
18-Wheel Semi-Tractors	Turbine Component Delivery
Truck-Mounted Drill Rigs	Drilling Soil Test Bore Holes
Concrete Trucks and Pumps	Pouring Tower and Other Structure Foundations
Conventional and Small Cranes	Off-Loading Equipment On Site, Set Tower Components

Heavy and Intermediate Cranes	Off-Loading Equipment On Site, Erecting Towers, Nacelles, and Rotors
Cement Trucks	Hauling Tower Base Cement Material
Pickup Trucks	General Use by Construction Personnel
Small Hydraulic Cranes/Forklifts	Loading and Unloading Minor Project Equipment
All-terrain Vehicles	Site Access
Rough-terrain Forklift	Lifting Equipment
Concrete Batch Plant	On-site Concrete Mixing for Turbine Foundations

F. Site Preparation, Surveying, and Staking

The work required for the Project will consist of performing ALTA surveys for property within the Project Area as well as field staking of the proposed access roads, WTG pads, substation pads and the operations and maintenance building pad. Preconstruction ALTA Surveys will conform to the requirements of the American Land Title Association as well as Applicant's internal standards. The ALTA survey will encompass each individual parcel in the Project Area based on title review, field reconnaissance and available municipal mapping and literature. This will be completed after substantial Project design including site roads, tower sites, substation yards, met towers, and construction yards, but prior to the commencement of construction.

A boundary survey of Project Area will require location or reestablishment of section corners and quarter section corners, and determination of bearings and distances between corners in accordance with BLM standards.

At the 30% design stage, Applicant will stake proposed facilities as follows:

- Internal access road centerlines, underground collection lines, and overhead transmission lines will be staked at 500-foot intervals and where necessary for continuous vision of the road.
- Stakes at each WTG location.

At the 75% design stage, Applicant will stake proposed facilities as follows:

- Internal access road centerlines, underground collection and overhead transmission lines will be staked at 100-foot intervals or intervals necessary for design review.
- Staking of the substation building site.

The Project surveyor will have a unique type of flagging for each project facility and each time of staking. Applicant's Project surveyor will not enter the Project Area without consent from Applicant or BLM and the surveyor will inform Applicant every morning or evening of each work day of his/her anticipated activities on-site.

Care will be taken to not damage the land during performance of field work. Surveyors will observe field gate closures and avoid vehicle rutting of the land surface.

G. Site Preparation, Vegetation Removal, and Treatment

Applicant typically proposes the use of the following vegetation removal construction practices and BMPs to minimize potential impacts during the construction phase. These BMPs emphasize erosion control over sediment control through such activities as the following:

- Retaining original vegetation wherever possible;
- Keeping runoff velocities low through minimization of slope steepness and length wherever practicable;
- Requiring construction personnel to avoid driving over or otherwise disturbing areas outside the designated construction areas;
- Designating an environmental monitor during construction to monitor construction activities and ensure compliance with mitigation measures; and
- Flagging of any sensitive habitat areas (e.g. raptor nests, wetlands, etc.) near proposed areas of construction activity and designating such areas as "off limits" to all construction personnel;

Applicant will conform to required measures pertaining to botanical resources as determined in the NEPA process, and addressed further below as part of the Wildlife and Habitat section below.

H. Site Clearing, Grading, and Excavation

Road construction, including turnaround and turn-widening areas, would be performed in multiple phases starting with rough grading and leveling roadway areas. Once rough grade is achieved, base rock would be trucked in, spread, and compacted to create a road base. A capping rock would then be spread over the road base and compacted to the finished grade. Once heavy construction is complete, a final pass would be made with the grading equipment to level out road surfaces and more capping rock would be spread and compacted in areas where needed.

Construction activities will begin with site preparation, including the construction of Project site access entry ways from public roads, rough grading of the roads, leveling the field construction site office parking area and the installation of temporary site office trailers. Temporary fencing may be installed around staging areas, storage yards, and excavations during construction as necessary for security and to protect public safety.

It is expected that the lay-down yard will temporarily cover approximately 25 acres and will require a maximum longitudinal and cross slope of 5%. However, in certain locations where the batch plant and other sensitive equipment are located, the maximum slope requirement may be 1%. The lay-down yard will be covered with gravel. Typically after construction, the gravel is removed down to 7 acres, which will be used as a staging area during operations.

Road siting and construction will incorporate existing BLM standards regarding road design, construction, and maintenance, as well as any further standards identified through the NEPA process. See the BLM 9113 Manual (BLM 1985) and the Surface Operating Standards for Oil and Gas Exploration and Development (Fourth Edition 2007) (i.e., the Gold Book).

Any required private road access rights will be legally secured with surrounding landowners prior to construction. Construction activities on BLM land will remain within the ROW granted by BLM. Prior to any construction, field investigations will be conducted of all areas anticipated to be disturbed (including temporary construction disturbances) to assist in identifying any environmentally sensitive areas (i.e. archeological sites, fragile watersheds, and areas with critical wildlife habitat). These areas will be avoided to the extent possible and/or impacts to these areas will be mitigated as appropriate. The construction workforce will be trained to identify and avoid all areas not included within the BLM ROW. Sensitive areas are flagged or otherwise marked to minimize the potential for accidental disturbance during construction.

The size and nature of wind turbine components and cranes will likely require some modifications of the requirements of the Gold Book standards. For example, the nature of the terrain in the Project Area and possible turbine locations may require roads with grades as steep as 14%. If road grades and/or runoff patterns indicate need for additional added erosion control measures, such measures will be installed to minimize erosion.

Blasting may be required at foundation sites and roads depending on the substrate encountered. All procedures identified by the BLM for conducting such work, as well as applicable federal and state regulations, will be followed. Blasting will be conducted by licensed explosives professionals and will observe applicable regulations and industry best practices.

In areas where excavation and blasting will occur, Applicant will gain a clear understanding of the local hydrogeology so that Project construction activities do not disrupt groundwater discharge and recharge in relation to surface water bodies. Blasting will be performed by state-licensed explosives experts only. Applicant will not create hydrologic conduits between two aquifers during foundation excavation and other construction activities. All required ACOE permits will be acquired prior to construction activities.

In addition, the Project will be subject to the requirements of a NPDES storm water construction permit. Applicant is already familiar with NPDES permit requirements and will submit an application for an NPDES permit after the final Project design and impacts have been determined.

A SWPPP will be developed for the Project and will include both structural and non-structural BMPs. Examples of structural BMPs could include the installation of silt curtains and/or other physical controls to divert flows from exposed soils, or otherwise limit runoff and pollutants from exposed areas of the site.

Figure 3-6: WTG Rotor Awaiting Erection

I. Gravel, Aggregate, Concrete Needs & Sources

Graveled surface areas will be required for the lay-down yards, step-up substation, access roads, turnaround and turn-widening areas, and crane

pads. Access roads will have a graveled surface approximately 16 feet across with compacted shoulders that will vary in width depending on the use of the access roads (i.e. crane use vs. non-crane use).

The quantities of rock anticipated for these activities generally comprises approximately 2,000 yards per mile for roads and 300 yards per crane pad. Raw materials such as aggregate, sand, and cement for similar projects was generally obtained from at least one of two different possible sources: (1) a local third-party supplier (Potentially the nearby California Portland Mojave Rock Quarry, which is located approximately 5 miles west of the Project Area) with rock trucked to site; and/or (2) an on-site rock processor that will crush large rock excavated from within the Project during construction-related cut and fill. These raw materials are staged typically in temporary silos onsite and proportionately combined based on the required concrete mix design for each foundation or pad. The concrete is placed in the delivery trucks and continuously mixed on the way to the turbine site, where the concrete is poured into the foundation forms.

The Project will require concrete foundations as bases for each turbine and pad transformer, substation equipment, and O&M building. Turbine foundations could be either a rock pier or spread foot type foundation requiring up to 500 cubic yards of concrete per foundation, which is a very conservative estimate based on Applicant's past experience.

Other Project components that will utilize concrete include:

- Project step-up transformer: 41 cubic yards
- O&M building: 23 cubic yards
- Circuit breaker: 7 cubic yards
- Permanent met tower footings: 15 cubic yards per footing
- Interconnection substation: 15 cubic yards

J. Wind Turbine Assembly and Construction

Each turbine will require foundations, the specifications for which will be determined based on geotechnical investigations and approved by the turbine manufacturer. Once foundations are put in place, the WTGs can be erected.

Turbines arrive at site in several sections, including 3 or 4 sections for the tower, 3 blades, the nacelle, and a rotor hub. The tower base is set first, followed by the remaining tower sections. Once the tower is erected, the nacelle is raised to the top of the tower with a crane. While still on the ground the 3 blades are bolted to the hub, which are then raised together and attached to the nacelle.

Figure 3-7: Rotor Being Installed on WTG

K. Electrical construction activities

Each wind turbine will be connected to other wind turbines by 34.5-kV collector cables, and these cables will also link strings of turbines to the Project substation. The collector cables will generally be buried underground alongside access roads to a depth of up to 36". The width of underground trenches will depend on the soil's electrical resistivity. Generally a 14-foot temporary disturbance is encountered for each three-foot-deep trench due to the width of the trencher and the over burden soil being deposited to one side. However wider disturbance areas may occur in areas of difficult terrain or subsoil conditions requiring alternate methods of trenching and installing cable. The entire disturbed area is reclaimed following installation of the cable. Once the roads, turbine foundations, and transformer pads are complete for a particular row of turbines, underground cables will be installed on that completed road section.

Applicant will minimize surface disturbance when burying electrical collector lines to the extent practicable. For example, conduit for the 34.5 kV power collection systems would usually be placed in trenches located under or near roadways. Vaults or splice boxes will be placed at locations as needed, and will be secured from public access by locking lids.

Runs of overhead collector line may be installed as necessary to carry power to the substation when underground collection is not feasible. Holes for each collection pole will be excavated or drilled and the poles will be erected and set in place using a small crane or boom truck. Once a pole is set in place, Applicant will pour concrete around the base of the tower, or compact a clean fill material around the pole base according to the engineer's specifications. The overhead lines will connect to underground cables at each end through a riser. Typically, avian protection may be provided on overhead collection lines with perch guards and wide line spacing to prevent contact between two conductors.

Figure 3-8: Typical Project Substation

If access to transmission or collection structures not served by access roads is needed, some temporary disturbance will take place. However, Applicant will cause minimal temporary surface disturbance by endeavoring to clear and grub only 12-foot wide temporary roads, although wider disturbance areas may occur in areas of difficult terrain or soil conditions. In addition, areas around the transmission support structures may have larger temporary impacts due to the methods involved in drilling and placing the structures, although these disturbances will be minimized as much as practical. All disturbed areas will be reseeded.

Construction of the substation and interconnection facilities involves several stages of work including, but not limited to, grading of the area, the construction of several foundations for the transformers, steel work, breakers, control houses, and other outdoor equipment, the erection and placement of the steel work and all outdoor

equipment, and electrical work for all of the required terminations. All construction work will be done in accordance with the SWPPP for the Project.

The substation area will be fenced with security fencing to minimize the potential for entry by, and protect the safety of, non-authorized personnel.

L. Aviation Lighting

Lighting will be used on turbine strings as required by the FAA. The FAA's aircraft safety lighting requirements require the Project be marked with lights that synchronously flash red during the night only (at 2,000 candela). These lights are designed to concentrate the beam in the horizontal plane, thus minimizing light diffusion down toward the ground and up toward the sky. The exact number of turbines that will require lighting will be specified by the FAA after it has reviewed final Project plans and has issued Determinations of No Hazard. However, current published FAA lighting guidance has required that aircraft warning lights be mounted on the first and last turbines of each string, and no less than every ½ mile on the turbines in between. Aside from the aircraft warning lights, the turbines will not be illuminated at night.

Typically, the FAA does not require lighting on transmission structures, and as such Applicant will likely not place lights on transmission or collection lines.

M. Site Stabilization, Protection, & Reclamation Practices

As a part of SWPPP plan development, site-specific BMPs will be identified for construction activities, weather conditions, vegetative buffers, and slope stabilization. The sequence and methods of construction activities will be controlled to limit erosion. Clearing, excavation, and grading will be limited to the minimum areas necessary for construction of the Project. Surface protection measures, such as erosion control blankets or straw matting, also may be required prior to final restoration if potential for erosion is high.

Erosion control measures for the Project may include reseeding of all road cuts or related temporary bare road areas resulting from Project construction activities. An appropriate mix of native vegetation or other vegetation suited to the area would be identified in consultation with the BLM.

The Construction Manager typically reviews the SWPPP against actual practice periodically and will ensure that the controls identified in the plan are adequate and that construction personnel adhere to them. A summary of these in-house compliance inspections will be kept with the SWPPP, along with any notifications and reports of non-compliance items or areas. If the SWPPP has been followed but still proves to be inadequate to prevent storm water pollution, the SWPPP will be adjusted and resubmitted.

Restoration

To minimize habitat impacts, Applicant will prepare a site restoration plan. This type of plan will identify re-vegetation, soil stabilization, and erosion reduction measures to be implemented to ensure that all temporary use areas are restored. The plan will be developed through the NEPA process with input from the BLM specialists and CDFG.

Reclamation

The decommissioning and restoration process comprises removal of above-ground structures, below-ground structures to a depth of 36 inches, re-seeding of access roads within range land, re-vegetation and seeding of range land. Abandoned underground collection wires are not known to have any detrimental effect on the surrounding environment and will remain in place as removing them will cause significant, and unnecessary environmental impacts.

The following events may trigger the decommissioning process:

- Termination or expiration of wind energy lease
- Technology obsolescence or inability to replace or repower ageing turbines
- Any event that would cause the project to become inoperative for greater than two years

Above-ground structures include the turbines and towers, pad mount transformers, overhead collection and transmission lines, Applicant-owned portions of the substation(s), O&M building, and access gates unless landowner wishes them to remain in place. Below-ground structures include turbine foundations, collection system conductor and fiber, and drainage structures.

The process of removing structures involves evaluating and categorizing all components and materials into categories of recondition and reuse, salvage, recycling, and disposal. In the interest of increased efficiency and minimal transportation impacts, components and material may be stored on site in a pre-approved location until the bulk of similar components or materials are ready for transport. The components and material will be transported to the appropriate facilities for reconditioning, salvage, recycling, or disposal.

4 RELATED FACILITIES AND SYSTEMS

A. Transmission System Interconnection

Existing & Proposed Transmission System

The proposed Project will interconnect into the SCE Windhub substation, which serves as the northern terminus of the Tehachapi Renewable Transmission Project (TRTP). Applicant would interconnect to the Windhub Substation at 220kV. This transmission option would potentially require an approximately 1.5-mile 220kV transmission feeder line from the Project substation to the Point of Interconnect at the Windhub Substation.

Ancillary Facilities & Substations

The high-voltage transmission feeder line is described in Section 2.C above.

Ancillary facilities associated with the interconnect switchyard and substation equipment may include circuit breakers, bus and insulators, disconnect switches, relaying, battery and charger, surge arrestors, AC and DC supplies, control house, metering equipment, SCADA provision, grounding, and associated control wiring. The facilities will conform to all applicable BLM, NEPA and California regulations and electrical codes, as required.

Status of Power Purchase Agreements

Applicant has begun preliminary Power Purchase Agreement (PPA) discussions with numerous off-takers to include investor-owned utilities. Applicant has a goal of entering into a PPA by the end of 2010. Due to the robust nature of the State of California's Renewable Portfolio Standard, Applicant is confident we could be able to enter into a successful PPA for this project.

Status of Interconnection Agreement

Applicant submitted an interconnection request to SCE in March of 2007. The Project is CAISO Queue #188 and completed the Phase I study process in late 2009. Currently, the Project is undergoing a Phase 2 cluster study with results due no later than November 2010.

General Design & Construction Standards

The 220 kV, alternating current (AC) overhead transmission feeder line is expected to be carried on either wooden H-frame poles or steel monopole structures and will have a load carrying capacity of approximately 300 MVA, depending on the type of conductor used. Wooden H-frame poles are typically 60 feet high with a 40-foot wide cross-arm. Steel monopoles may be up to 120 feet tall with 10- to 12-foot long supporting arms. Minimum and maximum dimensions are outlined in Section 2.C, above.

The design specifications will be based on well-proven and established sets of construction standards set forth by the appropriate standard industry practice groups such as the American Concrete Institute, the Institute for Electrical and Electronic Engineers, the National Electric Code, and the Construction Standards Institute. The design and construction specifications are custom tailored for site-specific conditions by technical staff and engineers. The Project engineering team will also ensure that all

aspects of the specifications as well as the actual on-site construction comply with all of the applicable federal, state and local codes and good industry practice.

B. Meteorological Towers

The Project will include up to six permanent met towers that are fitted with multiple sensors to track and monitor wind speed and direction and temperatures. The met towers are connected to the wind plant's central SCADA system. Applicant uses permanent towers during operations that are free-standing, un-guyed structures that are as tall as the hub height of the turbine model installed. Each met tower also has a grounding system similar to that of the wind turbines with a buried copper ring and grounding rods which are all tied to the lightning dissipaters or rods installed at the top of the towers.

Permanent met tower foundations are generally 15-20 feet deep, but in the worst-case scenario, could be as deep as 40 feet depending on height, soil conditions, and geotechnical engineering requirements.

Temporary guyed met towers are generally required for 4-12 weeks for data calibration during the beginning of operations. The temporary met towers are installed prior to turbine construction in a few select turbine locations where the turbine foundations are to be placed. Foundations for temporary met towers would consist of a tower base, with a 2x6 foot footprint, and four guy wire anchor sets, with a 3x14 foot footprint each.

C. Other Related Systems

Communications System Requirements

Each turbine is connected to a central SCADA System through a network of underground fiber optic cable using the same trenches as the electrical collection system. The SCADA system allows for remote control monitoring of individual turbines and the wind plant as a whole from both the central host computer and from a remote PC. In the event of faults, the SCADA system can also send signals to a fax, pager, or cell phone to alert operations staff. The SCADA system delivers real-time power output information from the Project which can be accessed by power scheduling and system controls personnel to support real-time and hour-ahead power schedule schemes.

5 OPERATIONS AND MAINTENANCE

A. Operation and Facility Maintenance Needs

Routine maintenance of the WTGs will be necessary to maximize performance and detect potential malfunctions. O&M procedures will be established that define specific routine WTG maintenance and inspection activities in accordance with the WTG manufacturer's recommendations. Scheduled maintenance will be performed approximately every 6 months on each WTG. On average, each WTG would require 40 to 50 hours of scheduled mechanical and electrical maintenance per year.

Each WTG will be monitored continuously by a SCADA system that communicates major aspects of operation through communication lines to the O&M staff and a 7-day-per-week, 24-hour-per-day facility. Alarm systems will be triggered if operational characteristics fall outside set limits. Each WTG has an automatic braking system to stop the blades in the event of malfunction or excessive wind speed. Any problems will be reported promptly to on-site O&M personnel for correction.

Applicant will be responsible for maintenance of turbine string access roads, access ways, and other roads built by the Applicant to construct and operate the Project. Applicant will enter into a road use agreement concerning Applicant's use and maintenance of existing public roads for Project construction and operations. This agreement will likely allow for use of county-maintained roads and specify requirements for repairs resulting from damage attributed to Applicant's activities. This agreement will specify Applicant's responsibilities for maintaining and repairing public roads that Applicant may use to construct and operate the Project.

The O&M facility is discussed above in section 2.C.

B. Maintenance Activities

O&M personnel will perform routine maintenance, including periodically replacing lubricating fluids, checking parts for wear, and recording operating parameters. All roads, pads, and trenched areas will be inspected regularly and maintained to minimize erosion. The O&M staff will perform most repairs with the assistance of contracted personnel, as needed.

Figure 5-1: O&M Building in Oklahoma

Because the electricity generated by the Project is produced in aggregate from numerous individual turbines, conducting annual maintenance will not materially affect the performance of the Project. In addition, the Applicant will schedule most annual maintenance for the Project during the season with the lowest expected wind resource in order to minimize impacts on Project output.

Substations, large step-up transformers, and pad-mounted transformers will be maintained as part of normal operations and maintenance activities and will be accessed from the private site roads. In the event of transformer or other device failure, replacement of this equipment could be accomplished from the access roads.

Periodic grading and placement of gravel may be required to maintain road quality. Road maintenance will be scheduled during times of low or no wind to minimize airborne dust and speed limits of 25 mph will be posted and enforced for all O&M vehicles to minimize airborne dust and erosion.

C. Operations Workforce, Equipment, & Ground Transportation

Applicant will comply with all work schedule, transportation and Operations specifications set forth through the NEPA process, including signage, long-term access, inspections, and contingency planning.

During project operations there are typically an average of one to two service vehicles (i.e. pick-up trucks) daily, in addition to 8-15 workers typically present on site. During times of retrofitting and servicing, the Project may have up to 6-8 service vehicles working at one time.

Larger vehicles such as semi-trucks, backhoes, and cranes are utilized periodically as needed for repairs.

The Project will operate continuously (24 hours per day, 7 days per week) using an automated system. It will employ up to 16 full time workers. The operations crew will normally work 8 hour days Monday through Friday, with one person working half days on the weekends. This equates to a maximum of 36 trips during a 24-hour period.

Commercially reasonable efforts will be used such that any inoperative turbines will be repaired, replaced, or removed in a timely manner.

BLM and other appropriate agencies will have access to inspect the Project during operations.

6 ENVIRONMENTAL CONSIDERATIONS

A. General Description of Site Characteristics and Potential Environmental Issues

Special or Sensitive Species and Habitats

Vegetation in the Project Area consists primarily of creosote bush scrub, Mojave mixed scrub, and Joshua tree woodland. Four broad vegetation types occur in the Project Area, with the most predominate being shrub land and woodlands. In addition, there is a significant amount of disturbed habitat in the Project Area. The acreage of each vegetation community is provided below in Table 6-1 and a map showing location of each type is provided in the 2005-06 Avian Use Report provided in Attachment C.

Table 6-1: Approximate Vegetation Communities and Cover Types within Project Area

Vegetation Communities and Other Cover	Percent of Project Area*
Scrubs and Chaparrals	
Mojave Mixed Woody Scrub	25.01%
Mojave Creosote Bush Scrub	18.28%
Cheesebush Scrub	26.57%
California Buckwheat – Small-flowered Melic Scrub	1.38%
Subtotal	**71.24%**
Wetlands	
Mojave Desert Wash Scrub	3.16%
Subtotal	**3.16%**
Grasslands and Fields	
Wildflower Field	1.50%
Subtotal	**1.50%**
Woodlands	
Mojavean Juniper Woodland and Scrub	2.46%
Joshua Tree Open Woodland	21.18%
Subtotal	**23.64%**
Other Land Cover	
Disturbed Habitat	0.44%
Subtotal	**0.44%**
Total Acreage*	**100.00%**

*At time of survey, the Project Area was larger than currently anticipated.

A total of 13 special-status wildlife species documented within the general vicinity of the Project Area were identified from a review of the California Natural Diversity Database (CNDDB 2010). None of these records occur within the footprint of the Project Area.

Avian & Raptor Use

WesternEcoSystems Technology, Inc. (WEST) conducted extensive avian use and raptor nest surveys in 2005-06, including point count surveys, mist net studies, nocturnal radar studies, and raptor nest surveys. The final report from these surveys is included as Attachment C. Principal objectives of this baseline study were to (1) obtain data on diurnal avian use of the Project Area through use of both point counts and mist-net surveys; (2) determine passage rates and flight heights of spring nocturnal migrants over the Project Area through use of marine radar; (3) map vegetation communities within the Project Area; (4) document the occurrence of any federal and state threatened, endangered, candidate, or sensitive-status birds or their habitat that may be affected by the Project; (5) estimate any potential impacts to birds that could result from construction and operation of the proposed Project; and (6) identify potential Project modifications and/or mitigation measures that could reduce negative impacts.

No species listed as endangered or threatened by the USFWS were observed during the study. During avian use surveys, one Swainson's hawk, a California state threatened species, was observed. No Swainson's hawks were observed during targeted sensitive species surveys. Six species classified as species of special concern by the California Department of Fish and Game (CDFG) were also observed while conducting avian use surveys, including short-eared owl (*Asio flammeus*), northern harrier (*Circus cyaneus*), Le Conte's thrasher (*Toxostoma lecontei*), loggerhead shrike (*Lanius ludovicianus*), purple martin (*Progne subis*) and Vaux's swift (*Chaetura vauxi*). An additional six species maintained on the CDFG's Watch List were observed during surveys: Cooper's hawk (*Accipiter cooperii*), sharp-shinned hawk (*Accipiter striatus*), ferruginous hawk (*Buteo regalis*), merlin (*Falco columbarius*), prairie falcon (Falco mexicanus), and golden eagle (*Aquila chrysaetos*). The golden eagle is also protected under the Federal Bald and Golden Eagle Protection Act of 1978, and is considered a Fully Protected species in California. Of the sensitive raptor species observed, prairie falcon (32 observed) and Cooper's hawk (16 observed) were the most common

While not observed during avian use surveys conducted in 2005-06, burrowing owls (*Athene cunicularia*) have been documented within vicinity of the Project and have a moderate potential to occur within the Project Area. Applicant will conduct protocol-level surveys for burrowing owl in the spring and early summer of 2010 in accordance with the Applicant's Wildlife and Botanical Survey Plan. Mitigation measures will depend upon the results of those surveys. Additionally, a golden eagle/raptor nest survey will be conducted in the spring of 2010 in accordance with the USFWS' Interim Golden Eagle Inventory and Monitoring Protocols. Applicant's Draft Wildlife and Botanical Survey Plan is included as Attachment E.

<u>Bats</u>

Applicant has conducted one year of acoustic bat surveys of the Project Area. The survey report is included as Attachment D. Acoustic surveys for bats using Anabat™ II ultrasonic bat detectors at five fixed paired (ground-based and raised) stations were conducted from July 1, 2008 to August 13, 2009. The objective of the acoustic bat surveys was to estimate the seasonal and spatial use of the Project Area by bats. A total of 10 Anabat units recorded 291 bat passes during 2,875 detector-nights. The five ground-based Anabat units recorded 193 bat passes during 1,638 detector-nights while the five raised Anabat units detected 98 bat passes during 1,237 detector-nights. Averaging bat passes per detector-night across locations, a mean of 0.10 bat passes per detector-night was recorded.

Nearly all (97.9%) bat calls were less than 30 kilohertz in frequency (e.g., hoary bat [*Lasiurus cinereus*], silver-haired bat [*Lasionycteris noctivagans*]), while 0.7% were

greater than 40 kilohertz in frequency (e.g. canyon bat [*Parastrellus hesperus*], long-legged bat [*Myotis volans*]). The remaining 1.4% was attributable to mid-frequency bat species (e.g., pallid bat [*Antrozous pallidus*], little brown bat [*Myotis lucifugus*]). Bat activity levels peaked in late March through late April, with a smaller peak occurring in late October. Of the bat species with potential to occur in the Project area, several species are considered state species of special concern and/or BLM-sensitive species: California leaf-nosed bat (*Macrotus californicus*), pallid bat, spotted bat (*Euderma maculatum*), Townsend's big-eared bat (*Corynorhinus townsendii*), western mastiff bat (*Eumops perotis californicus*), and western small-footed bat (*Myotis ciliolabrum*).

The mean number of bat passes per detector-night was compared to existing data from seven wind-energy facilities where both pre-construction bat use and post-construction bat mortality levels have been measured. The level of bat use documented at the Project Area was lower than at wind-energy facilities in Minnesota and Wyoming, where reported post-construction bat mortalities are lowest. As such, by comparing bat usage rate at the Project area with other wind farms, and assuming that a relationship between bat use and bat mortality exists, very low levels of bat mortality, relative to other facilities, would be expected to occur at the Project; with most fatalities occurring during late March to early May.

Mammals

There are records of Mohave ground squirrel (*Spermohpilus mohavensis*) within 5 miles of the Project Area. This species is listed as threatened under the California Endangered Species Act (CESA), but currently has no federal status. Habitat capable of supporting this species occurs throughout most of the lower slopes of the Project Area. Applicant will survey for the presence of Mohave ground squirrel in spring 2011 in accordance with Applicant's Wildlife and Botanical Survey Plan, a draft of which is included as Attachment E. Mitigation measures will depend upon the results of those surveys.

Two pocket mice, the San Joaquin (*Perognathus inornatus inornatus*) and Tehachapi pocket mouse (*Perognathus alticola inexpectatus*), and the Tulare grasshopper mouse (*Onychomys torridus tularensis*) were identified as occurring in the Project region in the CNDDB report. The Tehachapi pocket mouse and the Tulare grasshopper mouse are considered a "species of special concern" by CDFG, while the BLM considers all three to be "sensitive" species. There are three records of the Tehachapi pocket mouse between 4 and 9 miles from the Project Area. In general, the Tehachapi pocket mouse occurs above 3,500 feet in elevation. Habitat capable of supporting this species occurs in Joshua tree woodlands at higher elevations in the Project Area; however, the species' range is generally to the west of the Project and there is low potential for the Tehachapi pocket mouse to occur in the Project Area. There is one record of the San Joaquin pocket mouse within 5 miles of the Project Area. This record occurs at 4,000 feet on the Cache Creek side of Cameron Ridge and is on the extreme eastern edge of the species range. It is unlikely the San Joaquin pocket mouse occurs in the Project Area. The Tulare grasshopper mouse occurs in hot, arid valleys and desert scrub habitats and has been documented approximately 4 miles to the northwest of the Project. There is moderate potential for the Tulare grasshopper mouse to occur in the Project Area. Additionally, American badger has been documented within one mile of the Project Area and there is potential for this species to occur as well.

Reptiles

The CNDDB documents the presence of the federal and state threatened desert tortoise at several locations in vicinity of the Project. Suitable habitat for desert tortoise is present throughout the Project Area. Applicant will conduct a protocol-level survey for desert tortoise in the Spring of 2010 in accordance with Applicant's Wildlife and Botanical Survey Plan included as Attachment E. Mitigation measures will depend upon the results of those surveys. Additionally, the coast horned lizard (*Phrynosoma coronatum [frontale population]*), a CDFG species of special concern and BLM-sensitive species, has some potential to occur in the Project Area.

Federally-Listed Species

Federally-listed wildlife species with potential to occur within the proposed Project were identified from a search of the California Natural Diversity Database (CNDDB; CDFG 2010), as well as an online database maintained by the USFWS (2010). One species with federal threatened, endangered, or candidate status (desert tortoise [*Gopherus agassizii*]) is documented in the CNDDB as having known occurrence within the Mojave quadrangle and surrounding eight quadrangles. An additional four species (California condor [*Gymnogyps californianus*], least Bell's vireo [*Vireo bellii pusillus*], southwestern willow flycatcher [*Empidonax traillii extimus*], and western yellow-billed cuckoo [*Coccyzus americanus occidentalis*]) are listed by the USFWS's Ventura Office as having the potential for occurrence within Kern County (USFWS 2010). Of the species listed below, the desert tortoise has a high potential for occurrence within the Project Area. The remaining species have highly restricted ranges or occupy specialized habitats which do not occur within the Project vicinity, and therefore have little or no likelihood of occurrence within the Project Area.

Table 6-2: Potential for Occurrence of Federally Listed Species

Species	Status*	Habitat	Potential for Occurrence
Birds			
California condor *Gymnogyps californianus*	FE	Requires vast expanses of open savannas, grasslands, and foothill chaparral in mountains and foothills; tends to avoid large, open valleys. Nests in clefts of rocky walls of deep canyons. Roosts on cliffs, in large trees, and snags. Can forage up to 180 km from nest/roost	**Low**. No nesting/roosting habitat present within Project, and Project is generally outside of species' range; may rarely venture over region, especially if condor population continues to expand
Least Bell's vireo *Vireo bellii pusillus*	FE	Occurs in riparian habitats with dense shrub cover for nest concealment and structurally diverse canopy for foraging.	**None.** No nesting or foraging habitat present within Project Area
Southwestern willow flycatcher *Empidonax traillii extimus*	FE	For nesting, requires dense riparian habitats with saturated soils, standing water, or nearby streams, pools, or cienegas. Riparian	**None.** No suitable nesting or foraging habitat within Project Area

		habitats not suitable for nesting may be used for migration and foraging.	
Western yellow-billed cuckoo *Coccyzus americanus occidentalis*	FC	Breeds in riparian habitats along the broad, lower flood-bottoms of larger river systems.	**None.** No nesting or foraging habitat present within Project Area
Reptiles			
Desert tortoise *Gopherus agassizii*	FT	Occurs in gravelly desert washes, canyon bottoms, and rocky hillsides in habitats including the creosote, shadscale, and Joshua tree/Mohave yucca series of Mojave Desert scrub, the lower Colorado River valley subdivision of Sonoran Desert scrub, and semi-arid grasslands. Prefers habitats where diversity of perennial species is relatively high and production of ephemerals is high. Requires friable soils for burrow construction.	**High.** Suitable habitat is present; CNDDB documents species' occurrence within 4 miles of Project Area

*FE=Federal Endangered; FT=federal threatened; FC=federal candidate for listing

State-Listed Species, Species of Concern, and Watch List Species

State-listed wildlife species, species of special concern, and Watch List species with the potential to occur within vicinity of the Project Area were identified from a query of the California Natural Diversity Database (CNDDB 2010). Two wildlife species with state threatened status, eight state species of special concern and three Watch List species are documented as having known occurrence within the Mojave quadrangle and surrounding eight quadrangles. Based on a review of known species distributions and habitat requirements, an additional 18 species were added to the list including three state-endangered species, one state-threatened species, ten species of special concern, and four Watch List species. Several of the species listed below have highly restricted ranges or occupy specialized habitats which do not occur within vicinity of the Project Area, and therefore have little or no likelihood of occurrence within the Project Area. However, 24 of the species have been observed within the Project Area during surveys, or have at least a moderate potential for occurrence in the Project Area.

Table 6-3: Potential for Occurrence of State-Listed Species

Species	Status*	Habitat	Likelihood of Occurrence
Birds			
American peregrine falcon	SE	Found in a variety of habitats, most with cliffs or bluffs for nesting and	**Low.** Suitable nesting habitat is absent; species

Falco peregrinus anatum		open areas for foraging; also uses cities, nesting on the ledge of tall buildings.	may forage and/or migrate over Project Area.
American white pelican *Pelecanus erythrorhynchos*	SSC	In California, breed primarily in the Klamath Basin. Forages in shallow inland waters and along lake or river edge. Wintering birds also forage along shallow coastal waters.	**Low.** Suitable nesting and foraging habitat is absent, but species could migrate over Project Area.
Burrowing owl *Athene cunicularia*	SSC	Inhabits open dry grasslands, desert, and scrubland characterized by low-growing vegetation. Utilize subterranean nests constructed by burrowing mammals.	**High.** Habitat is suitable and CNDDB documents species' occurrence within 5 miles of Project Area.
California condor *Gymnogyps californianus*	SE	Requires vast expanses of open savannas, grasslands, and foothill chaparral in mountains and foothills; tends to avoid large, open valleys. Nests in clefts of rocky walls of deep canyons. Roosts on cliffs, in large trees, and snags. Can forage up to 180 km from nest/roost	**Low**. No nesting/roosting habitat present within Project Area, and Project Area is generally outside of species' range; may rarely venture over region, especially if condor population continues to expand
California horned lark *Eremophila alpestris actia*	WL	Found in open habitats, forages in bare dirt in short and/or sparse grassland and areas of scattered shrubs.	**Present.** Suitable habitat is present; observed in Project Area during surveys.
Cooper's hawk *Accipiter cooperii*	WL	Nests in woodlands and sometimes suburban settings if mature trees present. Forages in broken woodlands or near habitat edges with exception of desert occurrences; seldom found in areas without dense or patchy wooded areas.	**Present.** No suitable nesting habitat present, but likely migrant through site; observed in the Project Area during surveys.
Ferruginous hawk *Buteo regalis*	WL	Winters at lower elevations and open grasslands, agricultural areas in southwestern California, sagebrush flats, desert scrub, low foothills surrounding valleys, and the edges of pinyon-juniper habitats.	**Present.** Observed in the Project Area during surveys; likely winter resident and/or migrant.
Golden eagle *Aquila chrysaetos*	FP, WL	Inhabits rolling hills, mountains, sage-juniper flats and deserts. Uses secluded cliffs with overhanging ledges and large trees for nesting.	**Present.** No suitable nesting habitat, but species may forage within Project Area; documented within Project during avian use surveys.
Le Conte's thrasher *Toxostoma lecontei*	SSC	Occurs in open desert wash, desert scrub, alkali desert scrub, and desert succulent shrub habitats; Joshua tree habitat with scattered shrubs.	**Present.** Suitable habitat present; documented within Project Area during avian use surveys.
Loggerhead shrike *Lanius ludovicianus*	SSC	Uses open habitats with shrubs, trees, posts, fences, and low utility lines for perching. Forages in edge habitats, preferring shrubs adjacent to	**Present.** Suitable habitat present; documented within Project Area during avian use surveys.

		grasslands.	
Merlin *Falco columbarius*	WL	Occurs in open habitats at low elevations. Rare winter migrant in the Mojave Desert. Found in riparian environments, coastlines, open grasslands, savannas, woodlands, lakes, and wetlands.	**Present.** Observed in the Project Area during surveys.
Northern harrier *Circus cyaneus*	SSC	Inhabits large open grasslands, fields, prairies, and wetlands/marshes for nesting and hunting; nests on ground in tall wetland or grassland vegetation.	**Present.** No suitable nesting habitat present, but may forage within Project Area and/or migrate over Project Area; observed during avian use surveys.
Prairie falcon *Falco mexicanus*	WL	Inhabits annual grassland to alpine meadows, but is typically found in perennial grasslands, savannahs, rangeland, some agricultural fields and desert scrub areas. Nests on cliff ledges.	**Present.** Suitable habitat foraging habitat present; documented within Project Area during avian use surveys.
Purple martin *Progne subis*	SSC	Inhabits woodlands, low elevation coniferous forests of Douglas fir, ponderosa pine, and Monterey pine. Nests in old woodpecker cavities, often in tall, isolated tree/snag; may also nest in human-made structures.	**Present.** Observed during avian use surveys; occurs only as migrant over Project Area.
Sharp-shined hawk *Accipiter striatus*	WL	Nests in conifer and riparian forests, preferably on north-facing slopes with dense trees and near water. Forages in many types of habitats in winter and during migration.	**Present.** Observed in Project Area during avian use surveys; may forage within Project Area during winter and/or migrate over Project Area.
Short-eared owl *Asio flammeus*	SSC	Found in swamp lands, lowland meadows, and irrigated alfalfa fields. Nests on dry ground in depression.	**Present.** Observed in Project Area during avian use surveys; possible winter resident and/or migrant.
Southwestern willow flycatcher *Empidonax traillii extimus*	SE	For nesting, requires dense riparian habitats with saturated soils, standing water, or nearby streams, pools, or cienegas. Riparian habitats not suitable for nesting may be used for migration and foraging.	**Unlikely.** No suitable nesting or foraging habitat within Project Area.
Swainson's hawk *Buteo swainsoni*	ST	Breeds in grasslands with scattered trees, juniper-sage flats, riparian areas, savannahs, and agricultural or ranch lands; requires adjacent foraging areas supporting rodent populations.	**Present.** Observed in Project Area during avian use surveys; suitable nesting and foraging habitat present within Project Area.
Vaux's swift *Chaetura vauxi*	SSC	Common migrant throughout California but breeds in Douglas fir and redwood habitats with large,	**Present.** Occurs only as migrant over Project Area; observed during avian use

		hollow trees and snags in the Pacific northwest and northern California.	surveys.
Mammals			
American badger *Taxidea taxus*	SSC	Most abundant in drier open stages of most shrub, forest, and herbaceous habitats with friable soils for digging burrows.	**High.** Suitable habitat is present; CNDDB documents occurrence within 1 mile of Project Area.
California leaf-nosed bat *Macrotus californicus*	SSC	Occurs in desert riparian, wash, and desert and alkali scrub habitats. Roosts in rocky terrain with mines and caves near flats and washes.	**Moderate.** No roosting habitat in Project Area, but may forage in area.
Mohave ground squirrel *Xerospermophilus mohavensis*	ST	Occurs in open desert scrub, alkali scrub and Joshua tree woodland, usually on flat to gently sloping terrain with sandy, gravelly alluvial soils in the west Mojave Desert. Also feeds in annual grasslands. Often co-occurs with antelope ground squirrel.	**Low.** Suitable habitat present; however, extensive trapping in Project vicinity has not documented presence of species.
Pallid bat *Antrozous pallidus*	SSC	Inhabits arid grasslands, shrublands, and woodlands from sea level to mixed conifer forest. Roosts in rock crevices, buildings and bridges.	**High.** Limited roosting habitat is present, but species likely forages in Project Area.
Spotted bat *Euderma maculatus*	SSC	Occupies a wide variety of habitats from deserts and grasslands through mixed conifer forests. Feeds over water and along washes. Requires rock crevices in cliffs or caves for roosting.	**Moderate.** No roosting habitat present but may forage in Project Area.
Tehachapi pocket mouse *Perognathus alticola inexpectatus*	SSC	Occurs in a diversity of habitats including Joshua tree woodland, pinyon-juniper woodland, oak savanna, and non-native grasslands; burrows in friable, sandy soil.	**Low.** Suitable habitat may be present within Joshua tree woodland; range is generally to the west of the Project Area.
Townsend's big-eared bat *Corynorhinus townsendii*	SSC	Typically inhabits arid western desert scrub and pine forest. Forms maternity roosts in caves, mines, or buildings. In winter, hibernates in caves and abandoned mines.	**Moderate.** Limited roosting habitat present, but may forage within Project Area. CNDDB documents species' occurrence 5 miles to southeast.
Tulare grasshopper mouse *Onychomys torridus tularensis*	SSC	Found in hot, arid valleys and scrub deserts, in coastal scrub, mixed chaparral, sagebrush, low sage, and bitterbrush.	**Moderate.** Suitable habitat present; CNDDB documents species' occurrence approx. 4 miles to NW of Project Area
Western mastiff bat *Eumops perotis*	SSC	Occurs in many open, semi-arid habitats including conifer and deciduous woodlands, coastal scrub, grassland, etc. Roosts in crevices in cliff faces, high buildings, trees and tunnels.	**Moderate.** No roosting habitat present in Project Area, but may forage in area.

Reptiles			
Coast (California) horned lizard *Phrynosoma coronatum* (*frontale* population)	SSC	Occurs in loose sandy soils and alkali flats in a variety of habitats including chaparral, grassland, saltbrush scrub, coastal sage scrub, and clearings in riparian woodlands. Abundant prey base of ants and other insects required.	**High.** Suitable habitat present.
Coast (San Diego) horned lizard *Phrynosoma coronatum* (*blainvillii* population)	SSC	Found in loose, fine soils in a variety of habitats including coastal sage scrub, chaparral, grassland, coniferous forest, oak woodland, riparian woodland, and the margins of higher-elevation deserts in juniper desert chaparral. Abundant prey base of native ants and other insects required.	**Low.** Suitable habitat is present, but Project Area is outside of species known range.
Desert Tortoise *Gopherus agassizii*	ST	Occurs in gravelly desert washes, canyon bottoms, and rocky hillsides in habitats including the creosote, shadscale, and Joshua tree/Mohave yucca series of Mojave Desert scrub, the lower Colorado River valley subdivision of Sonoran Desert scrub, and semi-arid grasslands. Prefers habitats where diversity of perennial species is relatively high and production of ephemerals is high. Requires friable soils for burrow construction.	**High.** Suitable habitat is present; CNDDB documents species' occurrence within 4 miles of Project Area.

ST=State Threatened; SSC=state species of concern; FP=State Fully Protected; WL=watch list

BLM Sensitive Species

A list of BLM-sensitive wildlife species with potential to occur within the Project Area was compiled based on species' distribution maps and habitat requirements. BLM-sensitive species are those that may or may not occur on federal or state lists, but which are designated by the BLM State Director for special management consideration. Of the twelve BLM-sensitive species listed in the table below, 10 species have at least a moderate potential for occurrence in the Project Area.

Table 6-4: Potential for Occurrence of BLM Sensitive Species

Species	Status	Habitat	Likelihood of Occurrence
Birds			
Burrowing owl *Athene cunicularia*	BLM Sensitive	Inhabits open dry grasslands, desert, and scrubland characterized by low-growing vegetation. Utilize subterranean nests constructed by burrowing mammals.	**High.** Habitat is suitable and CNDDB documents species' occurrence within 5 miles of Project Area.
Golden eagle	BLM	Inhabits rolling hills, mountains,	**Present.** No suitable

Aquila chrysaetos	Sensitive	sage-juniper flats and deserts. Uses secluded cliffs with overhanging ledges and large trees for nesting.	nesting habitat, but species may forage within Project Area; documented within Project Area during avian use surveys.
Mammals			
California leaf-nosed bat *Macrotus californicus*	BLM Sensitive	Occurs in desert riparian, wash, and desert and alkali scrub habitats. Roosts in rocky terrain with mines and caves near flats and washes.	**Moderate.** No roosting habitat in Project Area, but may forage in area.
Pallid bat *Antrozous pallidus*	BLM Sensitive	Inhabits arid grasslands, shrublands, and woodlands from sea level to mixed conifer forest. Roosts in rock crevices, buildings and bridges.	**High.** Limited roosting habitat is present, but species likely forages in Project Area.
San Joaquin pocket mouse *Perognathus inornatus inornatus*	BLM Sensitive	Typically found in grasslands and blue oak savannas; requires friable soil for digging burrows.	**Unlikely.** Habitat no suitable; species range is generally to the west of the Project Area.
Spotted bat *Euderma maculatus*	BLM Sensitive	Occupies a wide variety of habitats from deserts and grasslands through mixed conifer forests. Feeds over water and along washes. Requires rock crevices in cliffs or caves for roosting.	**Moderate.** No roosting habitat present but may forage in Project Area.
Tehachapi pocket mouse *Perognathus alticolus inexpectatus*	BLM Sensitive	Occurs in a diversity of habitats including Joshua tree woodland, pinyon-juniper woodland, oak savanna, and non-native grasslands; burrows in friable, sandy soil.	**Low.** Suitable habitat may be present within Joshua tree woodland; range is generally to the west of the Project Area.
Townsend's big-eared bat *Corynorhinus townsendii*	BLM Sensitive	Typically inhabits arid western desert scrub and pine forest. Forms maternity roosts in caves, mines, or buildings. In winter, hibernates in caves and abandoned mines.	**Moderate.** Limited roosting habitat present, but may forage within Project Area. CNDDB documents species' occurrence 5 miles to southeast.
Tulare grasshopper mouse *Onychomys torridus tularensis*	BLM Sensitive	Found in hot, arid valleys and scrub deserts, in coastal scrub, mixed chaparral, sagebrush, low sage, and bitterbrush.	**Moderate.** Suitable habitat present; CNDDB documents species' occurrence approx. 4 miles to NW of Project Area
Western mastiff bat *Eumops perotis*	BLM Sensitive	Occurs in many open, semi-arid habitats including conifer and deciduous woodlands, coastal scrub, grassland, etc. Roosts in crevices in cliff faces, high buildings, trees and tunnels.	**Moderate.** No roosting habitat present in Project Area, but may forage in area.
Western small-footed myotis *Myotis ciliolabrum*	BLM Sensitive	Inhabits deserts, short-grass prairies, riparian areas, and coniferous forests; roosts in rock crevices, mines, caves, under bark, or in buildings.	**Moderate.** Limited roosting habitat present, but may forage within Project Area.

Reptiles			
Coast (California) horned lizard Phrynosoma coronatum (frontale population)	BLM Sensitive	Occurs in loose sandy soils and alkali flats in a variety of habitats including chaparral, grassland, saltbrush scrub, coastal sage scrub, and clearings in riparian woodlands. Abundant prey base of ants and other insects required.	**High.** Suitable habitat present.

Plant Communities and Significant Habitats

A list of state and federal special-status plant species with documented occurrence in the Mojave quadrangle and the surrounding eight quadrangles was compiled based on data from the California Natural Diversity Database (CNDDB; CDFG 2010). Included in this list are plants considered to be sensitive by the BLM (2010) and the California Native Plant Society (CNPS). An additional two plant species (short-tail beavertail cactus [*Opuntia basilaris* var. *brachyclada*] and Bakersfield cactus [*Opuntia basilaris* var. *treleasei*]) were added to the list based on a request from wildlife biologists in the BLM's Ridgecrest Field Office. Many of these special status plant species occur in limited regions of the quadrangles such as wetlands or specific geologic formations that are not present within the Project Area. According to the CNDDB, several of these plants which occur in habitat similar to that within the Project Area have been documented within 10 miles of the Project Area: alkali mariposa-lily (*Calochortus striatus*), white pygmy-poppy (*Canbya candida*), Barstow woolly sunflower (*Eriophyllum mohavense*), sagebrush loeflingia (*Loeflingia squarrosa* var. *artemmisiarum*), Charlotte's phacelia (*Phacelia nashiana*), and golden violet (*Viola aurea*).

Table 6-5: Potential for Occurrence of Sensitive Plant Communities

Species	Status*	Habitat	Flowering Period	Likelihood of Occurrence
Spanish needle onion *Allium shevockii*	CNPS 1B.3 BLM Sen	Pinyon and juniper woodlands; upper montane coniferous forest (elev. 2000-2300 m)	June	**Not Likely.** No suitable habitat in Project Area.
Horn's milk-vetch *Astragalus hornii* var. *hornii*	CNPS 1B.1	Meadows and seeps; playas (elev. 160-850 m)		**Not Likely.** No suitable habitat in Project Area.
Palmer's mariposa-lily *Calochortus palmeri* var. *palmeri*	CNPS 1B.2	Meadows and seeps; chaparral; lower montane coniferous forest (elev. 600-2245 m)	May-July	**Not Likely.** No suitable habitat in Project Area.
Alkali mariposa-lily *Calochortus striatus*	CNPS 1B.2 BLM Sen	Chaparral; chenopod scrub; Mojavean desert scrub; meadows (elev. 90-1595 m)	April-June	**Moderate.** Suitable habitat in Project Area; documented within 7 miles of Project Area.
White pygmy-poppy *Canbya candida*	CNPS 4.2 BLM Sen	Joshua tree woodland; Mojavean desert scrub (elev. 725-1250 m)	March-June (Annual)	**High.** Suitable habitat in Project Area; documented

				within 2 miles of Project Area.
Kern buckwheat *Erigonum kennedyi* var. *pinicola*	CNPS 1B.1 BLM Sen	Chaparral; pinyon and juniper woodland (elev. 1400-1890 m)	May-June	**Not Likely.** No suitable habitat in Project Area.
Barstow woolly sunflower *Eriophyllum mohavense*	CNPS 1B.2 BLM Sen (Ridgecrest field office)	Desert chenopod scrub; Mojavean desert scrub; desert playas (elev. 500-900 m)	April-May (Annual)	**Moderate.** Suitable habitat in Project Area; documented within 8 miles of Project Area.
Red Rock poppy *Eschscholzia minutiflora*	CNPS 1B.2 BLM Sen	Mojavean desert scrub (elev. 680-1230 m)	March-May (Annual)	**Not likely.** No suitable habitat in Project Area.
Pale-yellow layia *Layia heterotricha*	CNPS 1B.1 BLM Sen	Cismontane woodland; pinyon and juniper woodland; valley and foothill grassland (elev. 100-1300 m)	March-June (Annual)	**Not likely.** No suitable habitat in Project Area.
Sagebrush loeflingia *Loeflingia squarrosa* var. *artemmisiarum*	CNPS 2.2	Creosote bush scrub; Great Basin scrub; Sonoran Desert scrub; desert dunes (elev. 700-1200 m)	April-May (Annual)	**Moderate.** Suitable habitat in Project Area; documented within 7 miles of Project Area.
Calico monkeyflower *Mimulus pictus*	CNPS 1B.2 BLM Sen	Broadleaf upland forest; cismontane woodland (elev. 100-1300 m)	March-May (Annual)	**Not likely.** No suitable habitat in Project Area.
Short-joint beavertail cactus *Opuntia basilaris* var. *brachyclada*	FSOC CNPS 1B.2 BLM Sen	Chaparral; Joshua tree woodland; Mojavean desert scrub; pinyon and juniper woodland (elev. 425-1800 m)	April-June	**Moderate.** Suitable habitat in Project Area.
Bakersfield cactus *Opuntia basilaris* var. *treleasei*	FE CNPS 1B.1 BLM Sen	Arid grassland; valley sink scrub; saltbrush; juniper woodland (elev. 120-550 m)	April-May	**Low.** Suitable habitat in Project Area.
Spjut's bristle moss *Orthotrichum spjutii*	CNPS 1B.3	Lower montane coniferous forest; upper montane coniferous forest; pinyon and juniper woodland; subalpine coniferous forest (elev. 2100-2400 m)		**Not likely.** No suitable habitat in Project Area.
Charlotte's phacelia *Phacelia nashiana*	CNPS 1B.2 BLM Sen	Joshua tree woodland; Mojavean desert scrub; pinyon and juniper woodland (elev. 600-2200 m)	March-June (Annual)	**Moderate.** Suitable habitat in Project Area; documented within 8 miles of Project Area.
Piute Mountains jewel-flower *Streptanthus*	CNPS 1B.2 BLM Sen	Broadleaf upland forest; closed-cone coniferous forest; pinyon and juniper	May-June	**Not likely.** No suitable habitat in Project Area.

cordatus var. *piutensis*		woodland (elev. 1095-1735 m)		
Golden violet *Viola aurea*	CNPS 2.2	Great Basin scrub; pinyon and juniper woodland (elev. 835-1800 m)	April-June	**Moderate.** Suitable habitat in Project Area; documented within 3 miles of Project Area.

*FE: Federally endangered.

FSOC: Federal species of concern.

BLM Sen: Bureau of Land Management Sensitive.

CNPS 1B.1: Plants seriously threatened in California and at a minimum rare elsewhere.

CNPS 1B.2: Plants fairly threatened in California and at a minimum rare elsewhere.

CNPS 1B.3: Plants not vey threatened in California and at a minimum rare elsewhere.

CNPS 2.2: Plants fairly threatened in California but more common elsewhere.

CNPS 4.2: Plants with a limited distribution in California.

To minimize vegetation and habitat impacts, Applicant will prepare a site restoration plan. This type of plan typically identifies re-vegetation, soil stabilization, and erosion reduction measures to be implemented to ensure that all temporary use areas are restored. The plan will be developed through the NEPA/CEQA process with input from the BLM specialists and CDFG.

Cultural and Historic Resource Sites and Values

Applicant conducted research using the following online resources to determine if there were any properties listed on the NRHP or designated as a National Historic Landmark within the Project Area:

- National Register Information System (http://www.nr.nps.gov/);
- National Register of Historic Places - NPS Focus (http://nrhp.focus.nps.gov/natreghome.do?searchtype=natreghome);
- National Register of Historic Places (http://www.nationalregisterofhistoricplaces.com/); and
- National Historic Landmarks Program (http://www.nps.gov/history/nhl/)

This research was used to assess whether previously recorded historic and archaeological sites, structures, or properties may be impacted by the proposed Project. No records were found within the Project Area

Searches of the above resources indicated that there are no NRHP-listed historic properties within the Project Area (i.e., the direct Area of Potential Effect (APE)). Additionally, records searches indicated that there are no historic properties that are NRHP–listed within one mile of the Project Area. However, there are a number of existing structures in the Project Area, and Applicant will undertake a determination of their historical or cultural value prior to ground-disturbing activities.

Existing research may indicate that the Project Area is especially sensitive for the presence of surface archaeological sites and historic resources. It is also possible that the alluvial landforms and hills of the Tehachapi Range in the Project Area contain buried archaeological sites and unrecorded features. A thorough intensive pedestrian survey may result in the identification of previously undiscovered cultural resources.

Applicant is currently in the process of contracting a Class I cultural records search which will guide Project design. Additionally, Applicant plans to conduct a pedestrian survey of potentially impacted areas during 2010. If it is determined that cultural and/or religious use sites will be affected by the Project, either during the class 1 research or during consultation with native American tribes, Applicant will adhere to mitigation measures identified during the environmental review process.

As part of the initial Type II ROW application process, on December 7, 2009, Applicant requested from the Southern San Joaquin Valley Information Center (SSJVIC) a cultural resource records search of Sections 2 and 10 of township 11N range 13W ("Archaeological Study Area") as well as a one-mile radius of said land, which encompasses most of the Project Area. Additionally, on December 16, 2009, Applicant's archaeologist, with the assistance of BLM personnel, conducted a record search at the BLM Field Office in Ridgecrest, California. The record search involved detailed examination of cultural resources survey reports, site records, and other documents pertaining to the APEs and other portions of the Project Area that are under BLM jurisdiction. Results of the record searches conducted by the SSJVIC staff and by Applicant's archaeologist at the BLM Ridgecrest Field Office indicate that no previously recorded cultural resources were located within the Archaeological Study Area boundaries.

However, the record search did indicate that 11 previously recorded cultural resources, including four sites and seven isolated artifacts, are located within one mile of the Archaeological Study Area. The SSJVIC record search also determined that 70 additional isolated artifacts are reported within a one-mile radius of the Archaeological Study Area, but none of these have been formally recorded or mapped.

Native American Tribal Concerns

While no tribal lands were identified within the Project Area, Applicant will work with potentially affected tribes, if any, regarding Project impacts.

Recreation and Off-Highway Vehicle (OHV) Conflicts

As noted in the WMP, "Located only 90 minutes from downtown Los Angeles, the West Mojave is the recreational backyard of the metropolitan area's 17 million residents, of whom nearly 2 million participate in OHV activities." (WMP, 3-239) Due to the relatively easy access to the Project Area, there is a high likelihood that northern portions of the site, which are not managed by the BLM, are being used unofficially for OHV recreation.

The only state or federal recreation area currently identified within proximity of the Project Area is the Tomo-Kahni State Historic Park. However, this park is over 6 miles from the Project Boundary and the Project will not be visible from this park due to shielding from the Tehachapi Range.

The Pacific Crest Trail (PCT) runs to the Northwest of the Project Boundary and is approximately 1.5 miles away at its closest point. Currently, there are existing wind farms between the Project Boundary and the PCT, so the Project will not be viewed as visually dominant or obtrusive from the trail.

Visual Resource Management (VRM) designations

Currently, the California Desert District has not prepared VRM designation for the Project Area. Applicant intends to work with the Ridgecrest Field Office concerning its interim VRM classifications during the NEPA/CEQA process.

While erection of WTGs will have some impact on the existing viewshed, the Project Area is surrounded on two sides by existing wind farms, which currently dominate views from Mojave, the nearest population center.

Aviation and/or Military Conflicts

The Mojave Air and Space Port ("Mojave Airport") is situated approximately 3.5 miles to the east of the Project Area in the town of Mojave. Applicant understands that this aviation facility is vitally important to the community of Mojave, and as such Applicant will take every effort to ensure that operation of the Project will not impact aviation operations. In 2006, the Mojave Airport issued a letter stating that the Project will be located outside of the Airport Influence Area as established by the Airport Land Use Compatibility Plan. While the Mojave Airport is currently seeking to expand its sphere of influence, it has been indicated that this expanded influence zone will abut the eastern edge of the Project Area, and as such the Project will remain outside of this influence zone.

In November 2009, Applicant submitted a preliminary turbine layout encompassing 75 WTGs to the FAA for review. In January 2010, Applicant received "determinations of no hazard" from the FAA for all turbine locations submitted. Applicant will submit the final layout to the FAA after Project design is completed for a second round of review to ensure Project compatibility.

The DOD has designed a "red/yellow/green map" to guide wind energy development in Kern County which has been incorporated into the Kern County Zoning Ordinance under Section 19.08.160. This map identifies areas where wind farms can be constructed without military coordination (green), areas that might impact military operations if over 500 ft in height (yellow), and areas that will certainly impact military operations (red). The Project Area is located within green and yellow portions of DOD's map. Specifically, the BLM portion of the Project Area is located within the yellow zone. The Kern County Zoning ordinance allows erection of WTGs under 500 ft within yellow areas without DOD consultation. Ultimately, the BLM will determine the level of consultation required for the NEPA process.

Air Quality & Greenhouse Gas Emissions

The Project will not produce a significant amount of emissions. However, small amounts of fugitive dust will be created. Fugitive sources include the transfer of sand and aggregate, truck loading, mixer loading, vehicle traffic, and wind erosion from sand and aggregate storage piles. The amount of fugitive emissions generated during the transfer of sand and aggregate depends primarily on the surface moisture content of these materials. Rule 402 of the Kern County Air Pollution Control District specifies control measures.

Construction will also result in exhaust emissions from diesel-powered heavy equipment. Exhaust emissions from construction include emissions associated with the transport of machinery and supplies to and from the site, emissions produced onsite as the equipment is used and emissions from trucks transporting excavated materials from the site and fill soils to the site. Examples of these emissions include CO, ROG, NOX, PM10 and PM 2.5.

The Project will use one temporary mobile batch plant. The required amount of concrete to be used on a daily basis dictates the use of an on-site batch plant rather than trucking the concrete from a remote location, because of both the transport time and concrete cure times required by the foundation design. The batch plant facility will

consist of silos containing fly ash, lime and cement. In addition, the batch plant will use outside storage areas for sand, gravel, mixing equipment, and above-ground storage tanks for concrete and water. Designated areas for sand, gravel, and concrete unloading will be identified during the development process and prior to construction.

Greenhouse gases (GHG) that contribute to global climate change are carbon dioxide (CO2), methane, nitrous oxide, hydrofluorocarbons, perfluorocarbons, and sulfur hexafluoride (SF6). Emissions of CO2 occur largely from combustion of fossil fuels. Project-related activities would contribute to the generation of GHG emissions during construction and indirectly contribute to the reduction of GHG emissions by providing low-GHG electricity to California customers.

While the project would generate GHG emissions during construction due to the operation of construction vehicles, it should be noted that the wind energy provided by the project is a much cleaner source of energy than traditional sources used for the generation of electricity, such as the burning of coal, fuel oil, or natural gas. Since wind energy creates no CO2 emissions, the size of CO2 reductions from wind energy generation depends on what type of electric generation would be displaced by the addition of the wind energy.

The daily operation and the maintenance of the power plant will generate area source emissions and mobile source emissions based on the employee trips (30 full-time and part-time employees). The operational emissions will be completely displaced by the generation of renewable energy through operation of the WTGs. Therefore, adding up to 100 WTGs in the Project Area would not add any emissions to the existing air inventory; moreover, it will reduce the emissions in the region significantly in terms of criteria pollutants as well as greenhouse gases.

Fire Control

Generally speaking, the highest expected fire risk in this area of California is usually that of a brush fire during the hot, dry summer season. With the types of modern WTGs proposed for the Project, WTG malfunctions leading to fires in the nacelle (main machinery enclosure) are extremely rare.

Noise

A number of existing structures, some inhabited, occur in the Project Area that could be within the audible range of proposed WTGs. Applicant will conduct a baseline noise analysis to determine the existing noise level in the Project Area and to determine effects of the Project on the ambient level. Since the Project Area is in very close proximity to existing wind farms, the ambient noise level may be larger than expected given the rural nature of the area. Applicant will adhere to all appropriate noise standards and requirements including Section 19.64.140 of the Kern County Zoning Ordinance.

With modern technology, wind is efficiently converted into rotational torque rather than acoustic noise. During commercial operation the wind turbines will generate sound (swooshing as the blades pass through the air). The level of this sound diminishes with distance. For a typical configuration the sound would be barely audible at a distance of 1,500 feet under most atmospheric conditions. At a distance of two miles any sound generated by the wind farm is unlikely to be perceptible.

During construction, equipment operation may produce noise levels at or above 85 decibels; however, these levels will be primarily limited to 50 ft from operating

equipment. The table below presents general noise levels that may be encountered during constructions.

Table 6-6: Composite Construction Site Noise Levels

Construction Phase	Composite Equipment Noise Level at 50 feet (dBA)	Composite Equipment Noise Level at 1,500 feet (dBA)
Clearing	88	58
Excavation	90	60
Foundation	89	59
Erection	84	54
Finishing	89	59

Source: EPA, 1971.

Federal codes, primarily the Occupational Safety and Health Act of 1970 (OSHA) regulate worker exposure noise levels and would apply during construction and maintenance of the project. These codes limit worker exposure to noise levels of 85 dB or lower over an 8-hour period. In addition, State of California regulations (California Noise Exposure Regulations and Title 8, CCR, Section 5095) limit worker exposure to noise levels of 85 dB or lower over an 8-hour period. The Project will also comply with Chapter 19.64 of the Kern County Zoning Code.

Socioeconomics

Wind energy projects typically result in a significant temporary increase in population during construction and a slight increase in population during operations, having a positive effect on the local economy. Effects on the local economy typically include increased demand for housing, increased income, and jobs added to the local economy. The effect of wind farms on property values has been extensively studied and has been found to have no significant correlation, most recently in a 2009 study by the Lawrence Berkeley National Laboratory (Hoen et al, 2009). Indirect impacts would result from increases in indirect and induced income and jobs added to the local economy. However, Project-induced economic activity is not expected to result in significant indirect population growth and a related demand for housing capacity. The Project would generate both direct and indirect increases on local tax revenues.

B. Design Criteria Proposed by Applicant

Special or Sensitive Species & Habitats

Applicant has a reputation for retaining some of the top biologists and environmental science professionals in the industry and Applicant will rely on their guidance in designing and constructing the Project. In addition, Applicant has environmental managers on staff fully dedicated to the successful implementation of pre-, during-, and post-construction wildlife studying, monitoring, and mitigation.

Wildlife and Habitat

Design criteria used at the Project to minimize impacts to wildlife will depend on the results of baseline wildlife surveys, the plan for which is included as Attachment E.

Applicant will use the baseline data currently being collected to inform the NEPA/CEQA environmental review and to determine appropriate mitigation measures.

Specific design criteria proposed to minimize impacts to wildlife include:

- Use of underground (vs. overhead) electrical lines wherever practical to minimize perching locations and electrocution hazards to birds;
- Use of WTGs with low RPMs and use of tubular towers to minimize risk of bird collision with turbine blades and towers;
- Use of un-guyed permanent met towers to minimize potential for avian collisions with guy wires;
- Equipping overhead power lines with raptor perch guards to minimize risks to raptors;
- Spacing overhead power line conductors to minimize potential for raptor electrocution; and
- Constructing all power lines to meet 2006 Avian Power Line Interaction Committee Guidelines.

Measures proposed during operations include:

- Instructing all Horizon employees, contractors, and site visitors to avoid harassment and disturbance of wildlife, especially during reproductive (e.g., courtship and nesting) seasons.
- Prohibiting untethered pets on site during operations.
- Implementing a Wildlife Incident Reporting System (WIRS) to report incidental findings of fatalities or injured wildlife during operations to BLM, USFWS, and CDFG.
- Exterior lighting within the Project Area shall be of the lowest illumination allowed for human safety, selectively placed, shielded, and directed away from adjacent habitat to the maximum extent practicable.
- Nighttime vehicle traffic associated with Project activities will be kept to a minimum volume and speed to prevent mortality of nocturnal wildlife species.
- To reduce collisions of avian and bat species with appurtenant structures, the Applicant will coordinate with the FAA to minimize lighting to the extent feasible by using minimal intensity, directional, low-sodium lights.

Vegetation

Specific design criteria Applicant proposes to implement during construction and operations include:

- Minimization of new road construction by improving and using existing roads and trails where practical instead of constructing new roads;
- Flagging of any sensitive habitat areas near proposed areas of construction activity and designation of such areas as “off limits” to all construction personnel; and
- Requirement of construction personnel to avoid driving over or otherwise disturbing areas outside the designated construction areas.

Noxious Weeds

Through the NEPA process, Applicant will develop a plan for control of noxious weeds and invasive species that could occur as a result of new surface disturbance activities at the Project. The plan will incorporate the BLM Field Office Weed Management Plan (if available) and address monitoring and methods for treating infestations and use of

certified weed-free mulching. Use of pesticides will be within the framework of BLM policies and entail only the use of EPA-registered pesticides.

Proposed weed control measures include:

- Cleaning all off-road equipment;
- use of certified "weed free" straw bales;
- re-vegetating disturbed ground with mixed perennial grasses;
- treating new gravel roads with residual herbicides;
- and implementing a regular monitoring program and chemical control measures.

General Wildlife Design Considerations

In addition, Applicant typically proposes the use of the following construction techniques and BMPs to minimize potential impacts to wildlife during the construction phase:

- Minimization to the greatest extent feasible the area required for Project construction and operation;
- Establishment and enforcement of reasonable driving speed limits during construction to minimize potential for road kills;
- Designation of an environmental monitor during construction to monitor construction activities and ensure compliance with mitigation measures; and
- Educating all construction employees on proper wildlife procedures, to avoid harassment and disturbance of wildlife, especially during reproductive (e.g., courtship and nesting) seasons. In addition, pets will not be permitted on site during construction.

Cultural & Historic Resource Sites & Values

In order to guide NEPA/CEQA review, Applicant will undertake pedestrian cultural resource surveys for any area where facilities plan to be sited. These surveys will include a comprehensive review of previous cultural resource studies conducted in the general Project vicinity, as well as research on the environmental history, prehistory, native peoples, and historical development of the area. A technical report will subsequently be prepared addressing possible Project effects on archaeological objects or sites. Applicant will modify Project design accordingly based on the results of these surveys.

Applicant will take the following preliminary measures to minimize impact to historic and archaeological resources:

- Avoid the specific resource by Project redesign if possible based on other constraints.
- If avoidance is not possible, Applicant will attempt to mitigate any negative effects by relocating any culturally significant features found during ground-disturbing activities.
- If relocation is not possible, mitigating measures such as study and cataloging may be proposed in consultation with the BLM and SHPO.
- If human remains are found, work would immediately cease and BLM and the local sheriff's office would be notified.
- Applicant will flag archeological sites that are eligible for or potentially eligible for the California Register of Historical Resources (CRHR) or NRHP that are

located within 100 feet of Project facilities and planned ground-disturbing activities.

Native American Tribal Concerns

Pursuant to NEPA/CEQA, NHPA, or other state requirements, Native American consultation shall be initiated early in the decision making process. The BLM will conduct government-to-government Native American consultations for the Project. Applicant has a strong history of good relationships with Native American tribes local to Horizon's projects and expects to maintain that reputation at this Project. Outside of government to government consultation, Applicant will make an individual effort to contact all tribes and individuals listed by the Native American Heritage Commission who may have concerns about the Project. If requested by tribes, Applicant will meet personally with tribal representatives. Interested tribes and individual representatives will be given ample opportunity to review conclusions of aforementioned cultural resource survey reports.

Recreation and OHV Conflicts

Applicant does not anticipate conflicts with recreation at the Tomo-Kahni State Park or along the PCT due to reasons stated in the previous section. However, the Project Area may be in use for unofficial off-road recreation. If conflicts with lawful recreational uses become apparent during the NEPA/CEQA environmental review and public scoping process, Applicant will conform to any required mitigation measures.

Visual Resources

Due to existing wind farms and other developments in the area, significant visual or aesthetic impact is not expected. Applicant will implement the following design criteria to reduce impact to visual resources:

- To the extent feasible, the sites selected for use as construction laydown areas shall be areas that are already disturbed and/or are in locations of low visual sensitivity. All construction-related areas shall be kept clean and tidy by storing construction materials and equipment within the proposed construction staging and laydown areas and/or generally away from public view.
- All operation and maintenance areas shall be kept clean and tidy by storing all wind generation equipment, parts, and supplies in areas that are screened from view and/or are generally not visible to the general public. Applicant will remove derelict WTGs and derelict parts and pieces promptly after decommissioning, and shall relocate such equipment, derelict parts and pieces to an area that is screened from view and/or is not visible to the general public.
- Applicant will use modern industrial turbine design as discussed in Section 2A above. Modern industrial turbine design has been improved to minimize visual impacts by designing the turbine towers, nacelles and rotors to be simple, sleek, and less obtrusive elements in the landscape.
- Applicant will make use of a fewer number of higher nameplate capacity turbines to the extent possible in order to decrease the cluttered nature that comes from a large quantity of smaller turbines.
- Only the minimum lighting required by the FAA will be used on turbine strings.

Additional activities that applicant will implement during construction to reduce impact to visual resources include:

- Minimizing areas of surface disturbance when feasible;
- Using dust suppression techniques such as applying water or chemical dust suppressants to reduce airborne haze; and
- Restoring exposed soils as closely as reasonably possible to their original contour and vegetation.

Aviation and/or Military Conflicts

The Project will obtain all necessary clearances from the FAA through a formal submission of FAA Form 7460-1, Notice of Proposed Construction or Alteration. The completion of this form is required by Code of Federal Regulations (C.F.R.) Chapter 14, Part 77: Objects Affecting Navigable Airspace, for any proposed object greater than 200 feet in height above the ground or that will penetrate one or more notification surfaces associated with an airport or heliport defined by the Part.

Preliminary design criteria that Applicant will implement include:

- Using WTGs that do not exceed the maximum DOD notification height of 500 feet indicated in Section 19.08.160 of the Kern County Zoning Ordinance.
- Coordinating with the National Telecommunications and Information Administration to determine if any telecommunications signals pass through the Project Area, and micro-siting turbines accordingly.

Air Quality

While small amounts of vehicle emissions will occur, primarily during construction, the primary air quality impacts expected will be from particulate matter creation during construction.

Applicant will develop a Fugitive Dust Control Plan in compliance with the Kern County Air Pollution Control District Rule 402 to reduce particulate matter emissions. As part of this plan, the following dust control measures will be implemented:

- All material excavated or graded will be sufficiently watered or otherwise stabilized to prevent excessive dust. Watering will occur as needed with complete coverage of disturbed areas.
- All material transported off site will be either sufficiently watered or securely covered to prevent excessive dust.
- If more than 5,000 cubic yards of fill material will be imported or exported from the site, then all haul trucks will be required to exit the site via an access point where a gravel pad or grizzly has been installed.
- Areas disturbed by clearing, earth moving or excavation activities will be minimized to the extent possible.
- Stockpiles of dirt or other fine loose material will be stabilized by watering or other appropriate method to prevent wind-blown fugitive dust.
- All on-site unpaved roads and off-site unpaved access roads will be effectively stabilized of dust emissions using water or chemical stabilizer/suppressant.
- Traffic speeds on unpaved roads shall be limited to an appropriate speed.
- Equipment engines will be maintained in proper working order.
- Hours of operation of heavy-duty equipment and/or the amount of equipment in use will be limited to the minimum amount required for Project implementation.

- The owner/operator will require that all diesel engines be shut off when not in use to reduce emissions from idling.

Energy and Natural Resources

The primary existing energy resources in the Project vicinity are operational wind farms, transmission lines, and electrical substations. Applicant proposes to incorporate the following design elements into Project design:

- Obtain crossing agreements to ensure that no disruption to existing electrical transmission will occur.

- Since a number of other energy developers are proposing to interconnect into the Windhub Substation, Applicant will work with these developers in collaboration with Kern County to ensure accommodation of planned transmission and collection facilities along Oak Creek Road. This may include co-location with other transmission feeder lines, or land dedication to the County.

- If Applicant decides to site the transmission feeder line through an existing wind farm, Applicant will work with existing wind farm operators, as well as the underlying landowners, to site transmission facilities in a way that will not impact current or future operations.

- Since the wind in the Project Area blows primarily from the northwest, and the existing wind farms are located up-wind of the Project Area, the Project will not block the wind resource at these existing projects.

Fire Control

The following design criteria will be implemented to reduce the risk of fire in the Project Area:

- The WTGs, transformers, substations and all other Project facilities will be surrounded by graveled areas and weed and vegetation control will be implemented as part of regular operations.

- The roads themselves will act as fire breaks and help contain the spread of fire. The Project roads will also improve accessibility for firefighting equipment, if needed.

- Prior to construction, a Fire Protection and Prevention Plan will be developed and implemented in coordination with the BLM and local Fire Protection Districts, and other appropriate agencies. The Fire Protection and Prevention Plan will be enforced both during construction and operations.

- Applicant will use WTGs with a control system, which will detect overheating in turbine machinery and automatically shut down the machine and send an alarm signal to the central SCADA system which would notify operators of the alarm by cell phone or pager.

- Both the wind turbine generators and the substation will be equipped with specially engineered lightning protection systems.

- Fire rules will be posted on the project bulletin board at the contractor's field office and areas visible to employees.

- Equipment parking areas and small stationary engine sites will be cleared of all extraneous flammable materials.

- Personnel will be trained in the practices of the Fire Safety Plan relevant to their duties. Construction and maintenance personnel will be trained and equipped to extinguish small fires in order to prevent them from growing into more serious threats.

- Smoking will be prohibited in wildland areas and will be limited to paved areas or areas cleared of all vegetation.

Industrial Wastes and Toxic Substances

Solid waste will be accumulated on site in dumpsters and/or drop boxes until hauled away to a licensed landfill. Applicant will reduce construction waste transported to landfills by recycling solid waste construction materials to the extent feasible. Applicant will provide a fenced storage area for recyclable materials that is clearly identified for recycling.

Hazardous materials will be used in a manner that is protective of human health and the environment and that complies with all applicable local, state, and federal environmental laws and regulations. Accidental releases of hazardous materials (e.g., spills of vehicle fuel during construction or lubricating oil for turbines) will be prevented or minimized through proper containment of these substances during use and transportation to the site. Lubricating oil will be used primarily within the turbines themselves, where any spill will be contained. Oily waste, rags, or dirty or hazardous solid waste will be collected in sealable drums and removed for recycling or transported and disposed of by a licensed contractor.

Figure 6-1: Typical Decibel Levels of Common Noise Sources

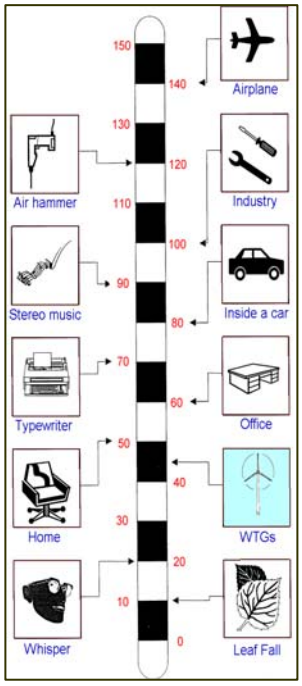

In the unlikely event of an accidental hazardous materials spill or release, the spill or release will be cleaned up and the contaminated soil or other materials will be treated and disposed of according to applicable local, state, and federal environmental laws and regulations. Spill kits containing items such as absorbent pads will be appropriately located on site for use on accidental spills, if any were to occur. Employees in contact with hazardous materials will be instructed in the proper handling and storage of these materials, as well as the location of spill kits.

In accordance with the California Health and Safety Code and Kern County regulations, Applicant will prepare a Hazardous Materials Business Plan. The Hazardous Materials Business Plan will delineate hazardous material and hazardous waste storage areas; describe proper handling, storage, and disposal techniques; describe methods to be used to avoid spills and minimize impacts in the event of a spill; describe procedures for handling and disposing of unanticipated hazardous materials encountered during construction; and establish public and agency notification procedures for spills

and other emergencies, including fires. Applicant will provide the Hazardous Materials Business Plan to all contractors working on the Project and will ensure that one copy is available at the Project site at all times.

Applicant will site all fueling, hazardous materials storage areas, and O&M activities involving hazardous materials at least 100 feet away from blue-line drainages as identified on U.S. Geological Survey topography maps and wetlands.

Noise

Applicant will comply with all federal, state and county requirements with respect to noise levels during construction and operation.

Applicant will contract a qualified acoustical consultant to conduct an acoustical analysis of the Project to ensure compliance with all applicable regulations. The consultant and the resulting report shall be subject to review and approval by the Kern County Health Department and BLM, as appropriate. The report will address any potential impacts on sensitive or highly sensitive land uses and will help guide specific Project design criteria.

During construction, noise mitigation measures will include:

- Using explosives in accordance with applicable BMPs, procedures and policies.
- Outfitting all construction equipment with sound-control devices no less effective than those provided on the original equipment, and adequately maintaining those devices.
- Locating all stationary construction equipment (i.e., compressors and generators) as far as practicable from nearby residences.
- Notifying nearby neighbors in advance if blasting or other noisy activities are required during construction.

Safety

Worker safety is of utmost importance. The Applicant and any operations subcontractors will comply with all applicable local, state, and federal safety, health, and environmental laws, ordinances, regulations, and standards. Some of the main laws, ordinances, regulations, and standards designed to protect human health and safety that would be reflected in the design, construction, and operation of the Project include:

- Occupational Safety and Health Act of 1970 (29 USC 651, et seq.) and 29 CFR 1910, Occupational Safety and Health Standards;
- Americans with Disabilities Act, for ADA accessibility at the O&M Building;
- Uniform Fire Code Standards;
- Uniform Building Code;
- National Fire Protection Association, which provides design standards for the requirements of fire protection systems;
- National Institute for Occupational Safety and Health, which requires that safety equipment carry markings, numbers, or certificates of approval for stated standards;
- National Electric Safety Code;
- American Concrete Institute Standards;
- American Institute of Steel Construction Standards;
- American Society for Testing and Materials;
- National Electric Code.

Applicant will implement the following design measures to ensure adequate worker and public safety:

- The Project would utilize WTGs designed with several levels of built-in safety measures.
- WTGs will all be monitored carefully by personnel located in the O&M facility and a central SCADA System would be used to remotely control the WTGs, connected to the turbines via a fiber optic communications network.
- Applicant will restrict public access to potentially hazardous facilities by installing permanent fencing around electrical substations and WTGs, and keeping turbine tower access doors locked.

Stabilization and Rehabilitation

To minimize habitat impacts, Applicant will prepare a site restoration plan. This plan will identify re-vegetation, soil stabilization, and erosion reduction measures to be implemented to ensure that all temporary use areas are restored. The plan will be developed through the NEPA/CEQA environmental review process.

Specific design criteria to be implemented at the Project include:

- The number, size, and length of new roads, temporary fences, lay-down yards, and borrow will be minimized to the extent possible.
- Applicant will minimize surface disturbance when burying electrical collector lines. In some cases, overhead power collection lines may be used to improve stabilization, such as in cases where substantial sub-surface rock is present or if the burial of lines would result in significant environmental disturbance.
- Areas of disturbed soil that are not occupied by Project facilities will be reclaimed wherever practicable according to BLM-approved standards. Reclamation activities will be undertaken as early as practicable on disturbed areas at such time with greatest success for re-vegetation.
- Foundations and trenches will be backfilled with originally excavated material as much as practicable. Excess excavation materials will be disposed of only in approved areas or, if suitable, stockpiled for use in reclamation activities.
- Applicant will identify unstable slopes and local factors that can induce slope instability (such as groundwater conditions, precipitation, earthquake activities, slope angles, and the dip angles of geologic strata) and modify Project design accordingly.
- Applicant will avoid creating excessive slopes during excavation and blasting operations. Appropriate construction techniques will be used where applicable in areas of steep slopes, erodible soil, and stream channel crossings.
- Applicant will apply erosion controls that comply with county, state, and federal standards. Practices such as jute netting, silt fences, and check dams are typically applied as appropriate on disturbed areas.

Termination and Restoration

The design life of major project equipment such as the turbines, transformers, substations, and supporting plant infrastructure is at least 20 years. However, the Project could be "repowered" by replacing wind turbines, towers, and other infrastructure with new, more efficient turbines and related equipment at an appropriate point in the future. If the Project were to be repowered, it could have a significantly longer useful life. Such upgrades may require additional review and approval in advance of the repowering being performed.

Prior to the termination of the BLM ROW authorization, a decommissioning plan will be developed in coordination with the BLM and other relevant agencies. That plan will be developed in compliance with the agencies' standards and requirements for closing and reclaiming a site at the time decommissioning occurs.

Applicant will be responsible for restoration activities, and typically funds a Restoration Fund beginning in year 15 of Project operations to finance restoration activities, or as pursuant to BLM and Kern County permit requirements.

All management plans, BMPs, and stipulations developed for the construction phase shall be applied to similar activities during the decommissioning phase, as appropriate. Reclamation procedures would be based on site-specific requirements and techniques commonly used at the time the area would be reclaimed and would include re-grading and re-vegetating all disturbed areas.

Further detail on Applicant's decommissioning methods can be found in Section 3.M.

Transportation

Prior to construction, Applicant will develop a ground transportation plan for the transport of turbine components, main assembly cranes, and other large pieces of equipment. The goal of the transportation plan is to minimize hazards resulting from the increased truck traffic and adverse impacts on traffic flow. This plan may incorporate measures such as informational signs, flaggers when equipment may result in blocked throughways, and traffic cones to identify any necessary changes in temporary lane configuration.

Applicant will incorporate the following design criteria to ensure low-impact transportation circulation:

- Upgrade and use existing roads where safe and practicable and where doing so will not result in unnecessary environmental impact.
- New roads will be no larger than necessary to accommodate their intended functions. Applicant will cover only approximately 16 feet with gravel, with the remaining width consisting of compacted shoulders. This will reduce the total amount of graveled surface while allowing for adequate access during construction and maintenance operations.
- Construction traffic will be restricted to roads suitable for construction vehicles and will be designed per the latest version of the Manual of Uniform Traffic Control Devices.

Water Resources

The majority of water use will occur during the construction phase for dust control and concrete since very little water is used in the O&M building during operations. Applicant

will work with local authorities to determine the proper source of water for construction needs.

Typical areas of concern and proposed mitigation measures for water resources include:

- *Surface Runoff Pollution during Construction*. The Applicant proposes to develop and implement, as required by the NPDES General Stormwater Permit for Construction Activities, a detailed SWPPP to minimize the potential for discharge of pollutants from the site during construction. Typically-proposed construction practices emphasize erosion control over sediment control through activities such as:
    - Straw mulching and vegetating disturbed surfaces;
    - Retaining original vegetation wherever possible;
    - Directing surface runoff away from denuded areas;
    - Keeping runoff velocities low through minimization of slope steepness and length wherever practicable; and
    - Providing and maintaining stabilized construction entrances.

- *Surface Runoff Pollution during Operations*. During operations, Applicant will be responsible for monitoring the SWPPP measures that were implemented during construction to ensure they continue to function properly. Operational BMPs will be adopted, as part of the SWPPP, to implement good housekeeping, preventive and corrective maintenance procedures, steps for spill prevention and emergency cleanup, employee training programs, and inspection and record keeping practices, as necessary, to prevent storm water pollution.

- *O&M Building Water Supply.* A licensed well driller will install a potable water well to serve the O&M facility. The well would be installed consistent with County, State, and BLM standards.

Applicant will conduct a field analysis of wetlands and waters of the U.S. within the Project and will avoid these areas to the extent practicable. Typically, WTGs are sited on elevated areas, which avoids disturbance of low-lying hydric land. If roads must cross such areas, the Applicant will minimize impacts, as much as possible, and obtain necessary permits from the ACOE and CDFG.

7 REFERENCES

Bureau of Land Management (BLM). 1980. California Desert Conservation Area Plan as Amended. Eagle Lake Field Office. Available at: http://www.blm.gov/pgdata/etc/medialib/blm/ca/pdf/cdd/cdcaplan.Par.15259.File.dat/CA_Desert_.pdf. Accessed April 19, 2010.

California Department of Fish and Game (CDFG). 2010. California Natural Diversity Database (CNDDB). 2008. *RareFind 3* (computer program). Database search for species and habitats within Mojave USGS quadrangle and surrounding eight quadrangles, California. Sacramento, California. (Accessed April 27, 2010).

California Department of Fish and Game (CDFG). 2008b. Life History Accounts and Range maps. California Wildlife Habitat Relationships System. Available online at: http://www.dfg.ca.gov/biogeodata/cwhr/cawildlife.aspx.

Hoen, Ben, Ryan Wiser, Peter Cappers, Mark Thayer, Guatam Sethi. 2009. The Impact of Wind Power Projects on Residential Property Values in the United States: A Multi-Site Hedonic Analysis. Lawrence Berkeley National Laboratory. http://eetd.lbl.gov/ea/ems/reports/lbnl-2829e.pdf, Accessed June 15, 2010.

New York State Energy Research and Development Authority. 2009. Comparison of Reported Effects and Risks to Vertebrate Wildlife from Six Electricity Generation Types in the New York/New England Region.

U.S. Environmental Protection Agency (USEPA). 2003. Level III Ecoregions of the Continental United States.

U.S. Fish and Wildlife Service (USFWS). 2010. Federally Listed Threatened and Endangered Species Which May Occur in Kern County, CA. U.S. Fish and Wildlife Service, Ventura Fish and Wildlife Office. Available online at: http://www.fws.gov/ventura/speciesinfo/spplists/sl_kern_co.cfm. Accessed April 27, 2010.