2.0 Description of Proposed Action and Alternatives

This chapter of the Environmental Impact Statement (EIS) fully describes: (1) the Proposed Action Alternative to build a 45-MW solar photovoltaic (PV) project and associated facilities at the Lucerne Valley project location, (2) a Modified Site Layout Alternative at the Lucerne Valley location, and (3) a Smaller Project Alternative for a 30-MW solar PV project at the Lucerne Valley location. Each of the action alternatives would include an amendment to the California Desert Conservation Area (CDCA) Plan and would require the rerouting of a portion of Zircon Road. This chapter also describes two No Action Alternatives, with and without an amendment to the CDCA Plan; alternatives development; and alternatives considered but eliminated from detailed analysis.

Alternatives considered in the EIS are based on issues identified by the Bureau of Land Management (BLM) as well as comments received during the public scoping process. The BLM is required to consider in detail a range of alternatives that are considered "reasonable," usually defined as alternatives that are realistic (not speculative), technologically and economically feasible, and that respond to the purpose of and need for the project.

This document provides information to the authorized officer to make the following decisions:

- Should a right-of-way (ROW) grant be issued? If so, should it be as requested or modified?
- Should the project area remain undesignated or should the CDCA Plan be amended to designate the project area as suitable or unsuitable for solar energy development?
- Should Zircon Road be rerouted? Should the new route be designated as open and the existing part of Zircon Road through the application will be designated as closed?

2.1 Alternatives Development

This section outlines the process used by the BLM to development the alternatives. Alternatives considered by the Applicant and the BLM along with those suggested by the public during the scoping process were evaluated using the following criteria:

- Does the alternative fulfill the BLM's purpose and need outlined in Section 1.1.1?
- Does the alternative reduce effects to human/environmental resources compared the proposed action?
- Is the alternative feasible to construct, operate, maintain, and decommission?

Alternatives that met all of the criteria listed above were carried forward for analysis and are detailed in Section 2.2. Those that did not meet the criteria were eliminated from further analysis and are described in Sections 2.3 and 2.4, along with the reasons for elimination.

2.2 Alternatives Considered and Carried Forward for Detailed Analysis in the Environmental Impact Statement

This section describes the two No Action Alternatives, the applicant's Proposed Action, a modified site alternative, and a smaller project alternative that satisfied the screening process. Features common to all action alternatives—phasing of development, proposed CDCA plan amendments, project components, and construction methods—are then detailed. Project features and construction methods listed in this section will serve as the basis of the environmental impact analysis in Chapter 4.

2.2.1 Alternative 1: No Action/No Plan Amendment

The No Action Alternative assumes that the ROW application is denied; that the Lucerne Valley Solar Plant and associated facilities would not be constructed and operated; and that the CDCA Plan would not be amended. The adoption of Alternative 1 would leave current management practices intact and would be in conformance with the CDCA Plan.

2.2.2 Alternative 2: Land Use Plan Amendment

Alternative 2 would deny the ROW application, but the CDCA Plan would be amended to classify the site as either suitable or unsuitable for large-scale solar development. The area within the project site would then be managed in accordance with the plan amendment.

2.2.3 Alternative 3: CES's Proposed Action

Under this Alternative, BLM's purpose and need would be met. The Applicant has applied for a BLM ROW authorization to construct, operate, maintain, and decommission a 45-MW, solar PV power plant and associated facilities. The applicant's Proposed Action site is located approximately eight miles east-southeast of the junction of Barstow Road and Old Woman Springs Road (both State Route 247) near the community of Lucerne Valley (Figure 1-1). Specifically, the site is south of the intersection of Foothill Road. It is bordered by Donaldson Road on the west and a drainage that runs approximately 1,300 feet east of Santa Fe Fire Road on the east in the township, ranges, and sections described below. Santa Fe Fire Road traverses the site in a north-south direction (Figure 2-1).

M:\SanFrancisco\Chevron_LuzerneSolar\Maps\MXD\
DEIS_July2010\Fig 2-1 Proposed Action Site.mxd

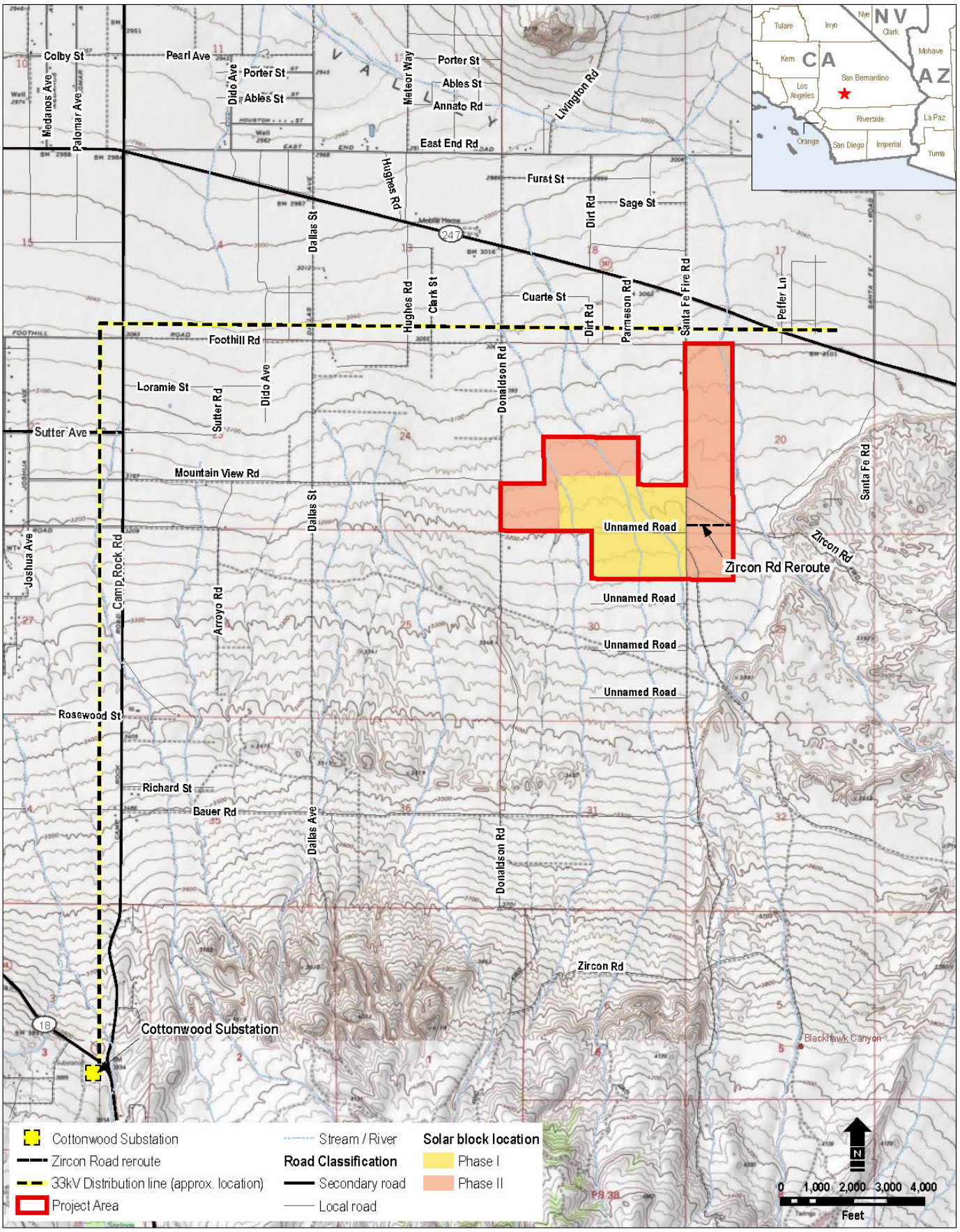

Base Map Source: Cal-Atlas 2009; ESRI 2009; USGS 1993;
California Interagency Watershed Mapping Committee 1999

Figure 2-1

Project Area Map

Lucerne Valley Solar Project

San Bernardino County, California

This page intentionally left blank

The total ROW would span 516 acres and consists of previously disturbed desert land under the jurisdiction of the BLM in San Bernardino County, California. The legal land description is as follows:

San Bernardino Base and Meridian

Township 4 North, Range 2 East:
- Sec. 19,
  - NE ¼ SW ¼
  - S ½ SW ¼
  - NW ¼ SE ¼
  - S ½ SE ¼
- Sec. 20,
  - W ½ W ½
- Sec. 29,
  - NW ¼ NW ¼
- Sec. 30,
  - N ½ NE ¼

2.2.3.1 Project Phasing

The proposed facilities would be built in two phases. The Phase I area would be within the southern portion of the ROW, west of Santa Fe Fire Road (Figure 2-1). Phase I would have an electrical generation capacity of 20 MW, with construction beginning in late 2010. Phase I would occupy approximately 180 acres (approximately 35 percent of the ROW) and would be operational in mid-2011. Phase I would interconnect to an existing Southern California Edison (SCE) 33-kilovolt (kV) distribution line along the north side of Foothill Road and could be built without upgrading the existing line.

The Phase II area would be both east and west of Santa Fe Fire Road. Phase II would have an electrical generation capacity of no more than 25 MW and would occupy approximately 240 acres (approximately 50 percent of the ROW). It would be contingent upon available transmission capacity and future power sales. Construction could begin as early as late 2011 but could be delayed by several years if additional transmission facilities are required to accommodate the renewable energy generation.

2.2.3.2 Proposed CDCA Plan Amendment

The site of the Proposed Action is located within a contingent utility corridor (Contingent Corridor “S”), as defined by the CDCA Plan. The site is managed in accordance with the CDCA and West Mojave (WEMO) Plans. This area is not designated as either suitable or unsuitable for solar energy development. Pursuant to Title V of FLPMA, the development of energy generation or transmission projects in areas not designated suitable as identified in the CDCA Plan (BLM 1980) must be considered through the plan amendment process. Therefore, development of renewable energy within the CDCA would require an amendment to the CDCA Plan that would change the designation within the ROW to suitable for solar energy generation.

2.2.3.3 Project Components

An overview of all the project elements for the applicant’s Proposed Action is depicted on Figure 2-2. Within the proposed ROW, the solar field, operations and maintenance (O&M) building,

parking/laydown area, and the switchyard would occupy nearly the entire site. About 85 percent of the ROW, encompassing 420 acres, would be used for the solar panels, and the remaining area would be used for access roads, power lines, a switchyard, an O&M building, a parking/laydown area, and undeveloped areas. The general dimensions of the project components and site disturbance are detailed in Table 2-1.

Table 2-1 Alternative 3 (Proposed Action) - Project Components, Dimensions and Site Disturbance

Project Components and Dimensions	Site Disturbance (acres)
Areas to be Graded/Developed	
Switchyard (10 feet x 12 feet)	0.003
O&M Building (12 feet x 20 feet)	0.006
Parking/Laydown area (250 feet x 50 feet)	0.5
Access roads within ROW (20 feet x 3 miles)*	7
Power line within project site (20 feet x 2 miles)	5
Subtotal of Areas Graded/Developed	*12.509*
Areas to be Grubbed/Scarified	
Solar Array for Phase I (includes inverters and transformers)	180
Solar Array for Phase II (includes inverters and transformers)	240
Subtotal of Areas Brushed/Developed	*420*
Total Area Developed	*433*
Total Area Undeveloped	*83*
TOTAL RIGHT OF WAY	516

*Includes Zircon Road realignment.

Solar Panels

The solar plant would convert sunlight to electrical power using solar PV arrays, which are composed of several PV panels. Each panel would measure about 40 inches by 55 inches and would be approximately six feet in height above ground level. The panels may be fixed tilt or single axis tracking. Two of these panels would be placed in portrait orientation on a south-facing rack tilted at approximately a 20- to 25-degree slope (Figure 2-3 and Figure 2-4). Each PV panel would have a maximum power output of 135 watts. Three panels would be connected in a series to form a 1,000-volt-level direct current (DC) string. Ten strings (30 panels) would be bundled together in a wiring harness. Fifteen hundred strings (4,500 panels) would be connected to a single 500-kilowatt (kW) inverter. Four 500-kW inverters would convert the DC power from 18,000 PV panels to 480-volt alternating current (AC), which would then be stepped up to 33-kV by a single 2-MW transformer.

Access Roads and Parking

The site is generally bounded by Foothill Road on the north and Donaldson Road on the west. Santa Fe Fire Road bisects the site in a north-south direction. A portion of Zircon Road traverses the eastern portion of the site. Foothill Road, Santa Fe Fire Road, and Zircon Road are all designated by the BLM as open routes and would remain open after construction of the project.

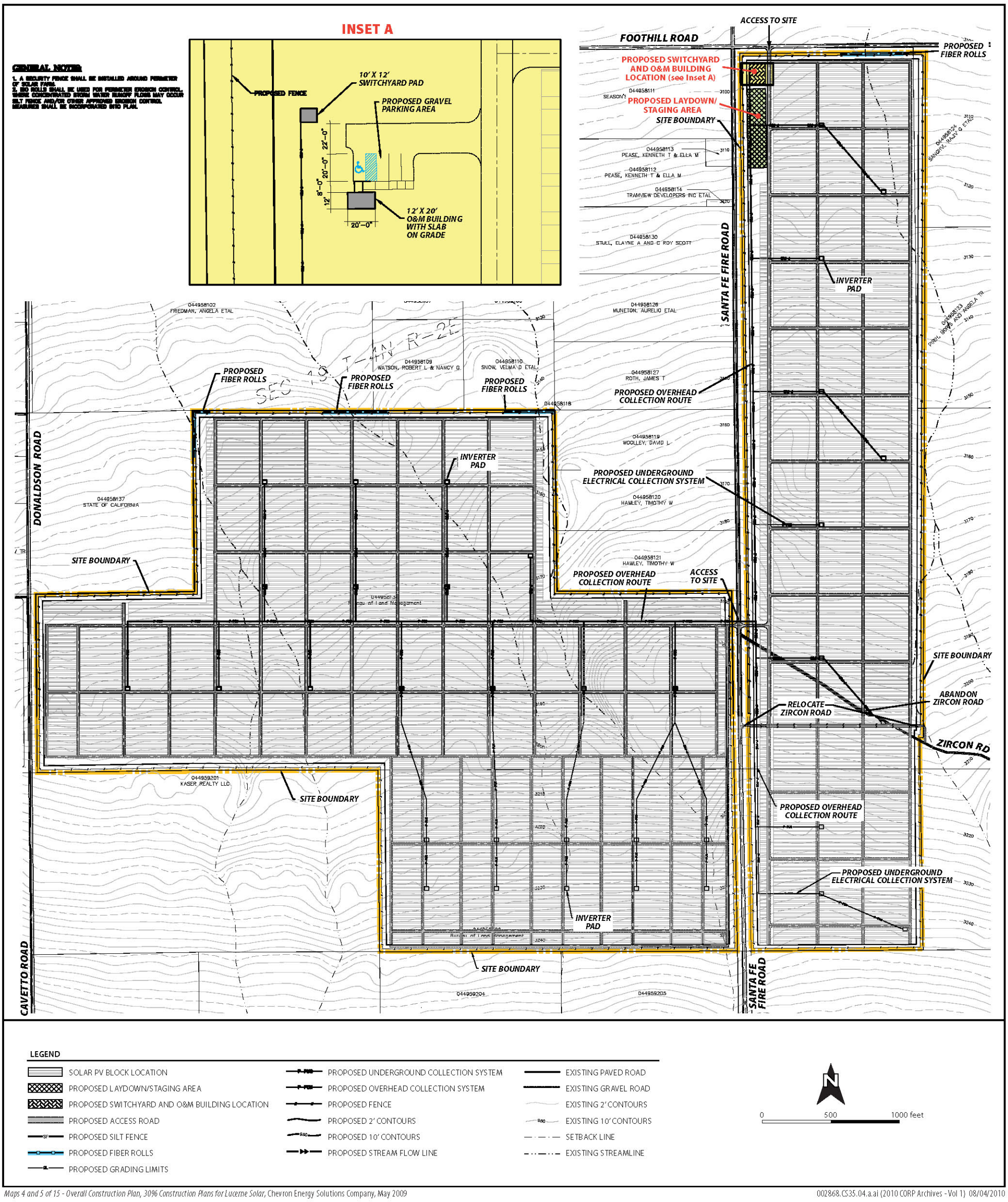

Maps 4 and 5 of 15 - Overall Construction Plan, 30% Construction Plans for Lucerne Solar, Chevron Energy Solutions Company, May 2009

002868.CS35.04.a.ai (2010 CORP Archives - Vol 1) 08/04/2010

Figure 2-2

Overall Site Plan, Phases I and II

This page intentionally left blank

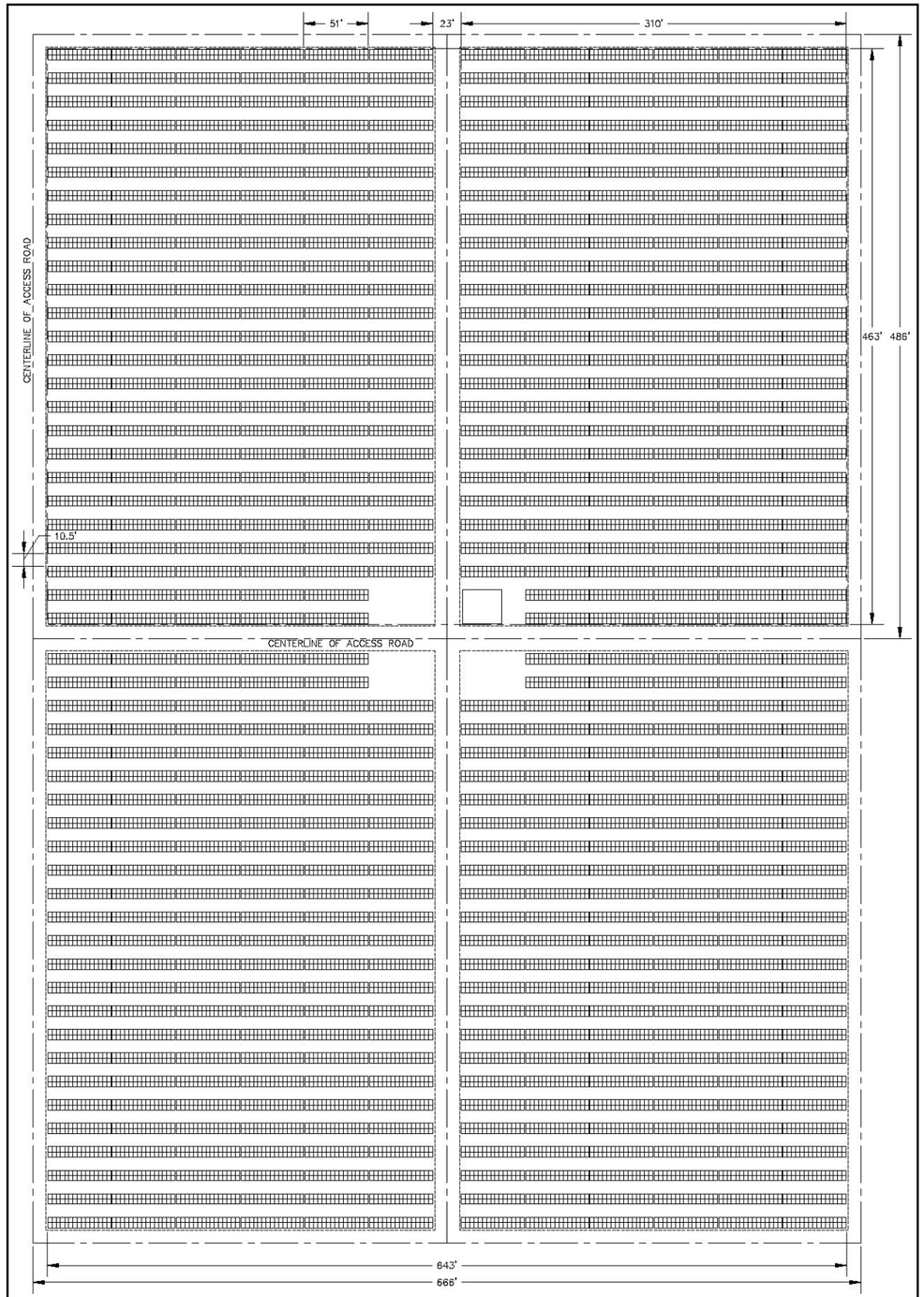

TYPICAL 2MW AC PV BLOCK CONFIGURATION

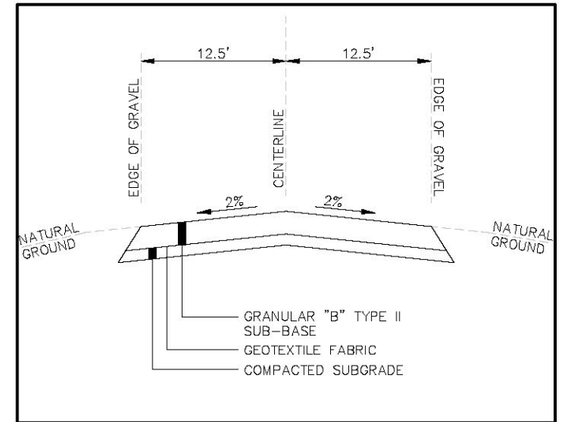

TYPICAL ACCESS ROAD CROWN SECTION

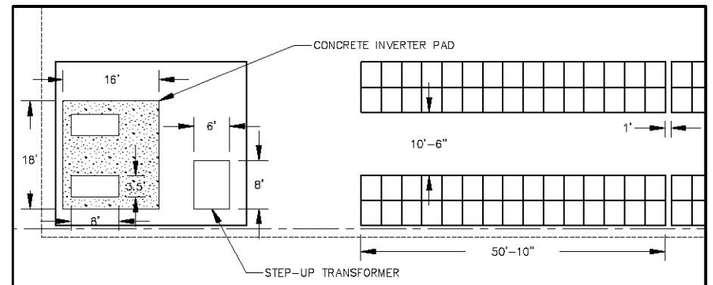

TYPICAL PV BLOCK CONFIGURATION

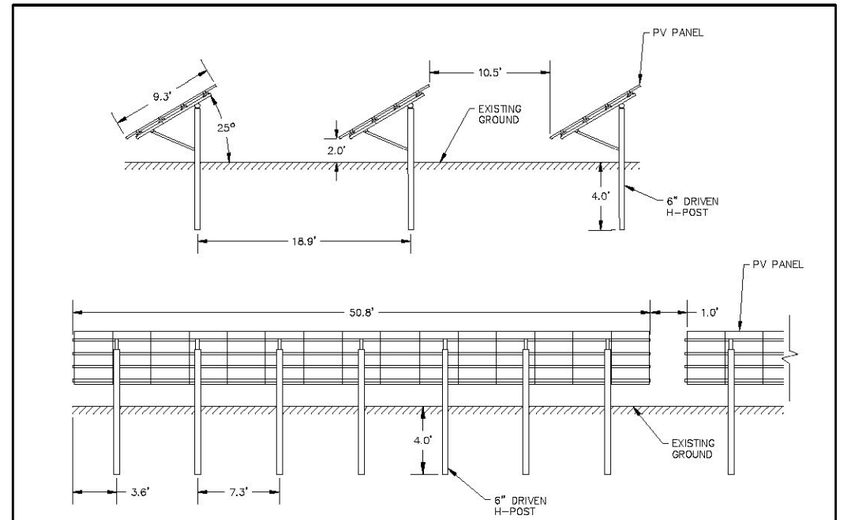

TYPICAL SINGLE-POST DRIVEN-PILE RACK

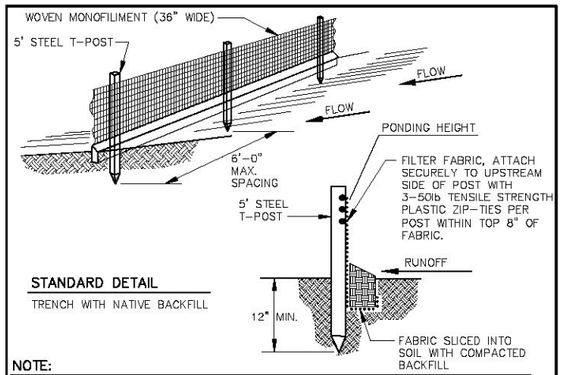

STANDARD DETAIL

TRENCH WITH NATIVE BACKFILL

NOTE:

1. INSPECT AND REPAIR FENCE AFTER EACH STORM EVENT AND REMOVE SEDIMENT WHEN ACCUMULATED TO 1/3 THE HEIGHT OF THE FABRIC OR MORE.
2. REMOVED SEDIMENT SHALL BE DEPOSITED TO AN AREA THAT WILL NOT CONTRIBUTE SEDIMENT OFF-SITE AND CAN BE PERMANENTLY STABILIZED.
3. SILT FENCE SHALL BE PLACED ON SLOPE CONTOURS TO MAXIMIZE PONDING EFFICIENCY.
4. ALL ENDS OF THE SILT FENCE SHALL BE WRAPPED UPSLOPE SO THE ELEVATION OF THE BOTTOM OF FABRIC IS HIGHER THAN "PONDING HEIGHT".
5. "HEAVY DUTY" IS SAME AS MACHINE SLICED ONLY HAND INSTALLED.

MACHINE SLICED SILT FENCE (Heavy Duty)

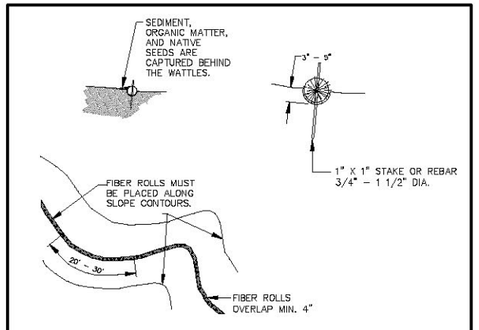

NOTE:

1. STRAW WATTLES CAN BE SUBSTITUTED FOR FIBER ROLLS.
2. STRAW WATTLES ARE TUBES MADE FROM STRAW BOUND W/ PLASTIC NETTING. THEY ARE APPROX. 8" DIA. AND 20 - 30 FT. LONG.
3. STRAW WATTLE INSTALLATION REQUIRES THE PLACEMENT AND SECURE STAKING OF THE WATTLE IN A TRENCH, 1" - 3" DEEP, DUG ON CONTOUR. RUNOFF MUST NOT BE ALLOWED TO RUN UNDER OR AROUND WATTLE.

FIBER ROLL

Figure 2-3

Project Details

This page intentionally left blank

Source: CES, 2009

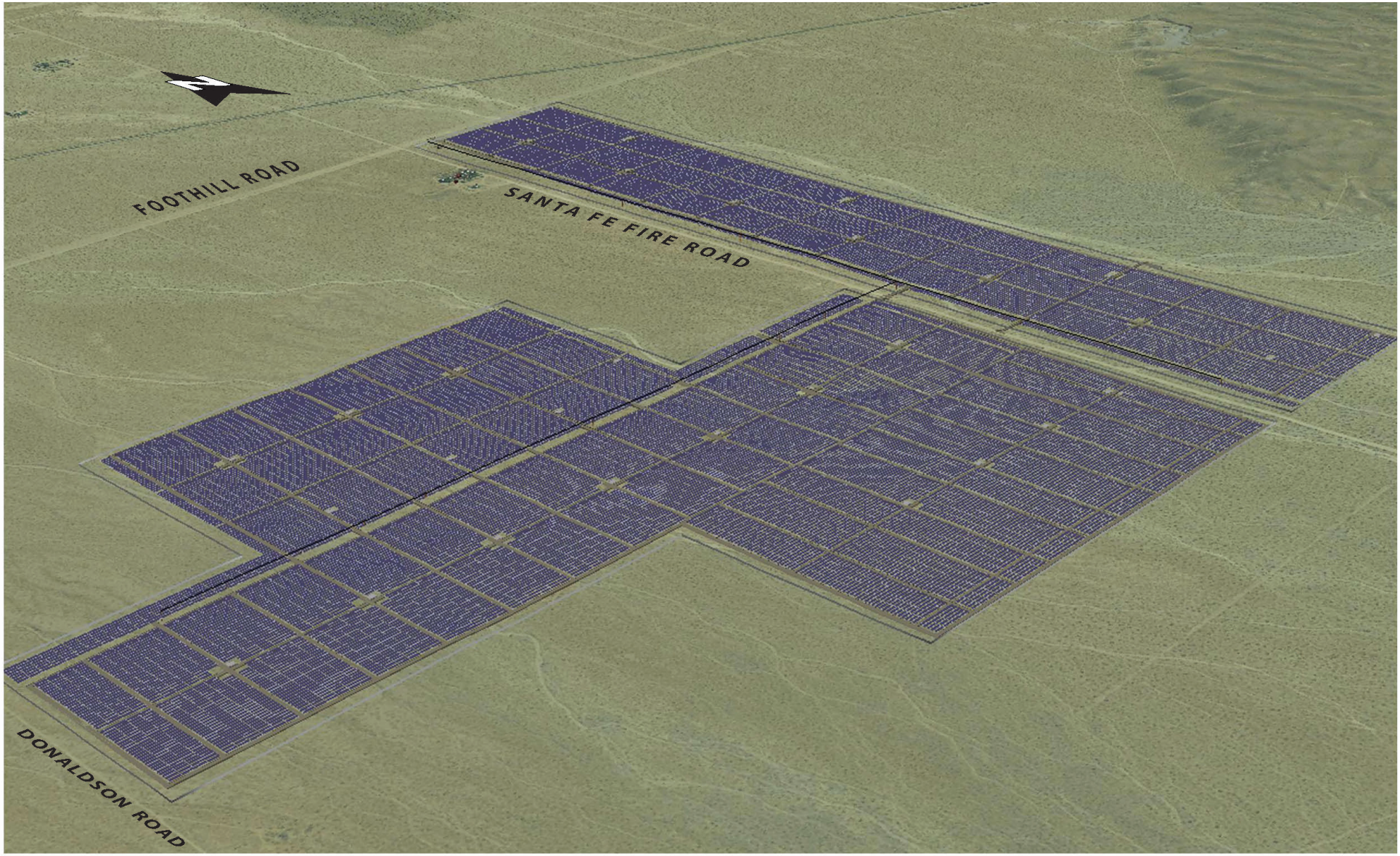

002868.CS35.03.g.ai (2010 Corp CD Archives - Vol 1) 07/29/2010

Figure 2-4

Simulated Aerial View of Project Area

This page intentionally left blank

Access to the site would be provided from Foothill Road, just east of its intersection with Santa Fe Fire Road and from Santa Fe Fire Road, just north of its current intersection Zircon Road (Figure 2-2). Internal access roads would be constructed between each array to allow maintenance staff access to the solar panels. The portion of Zircon Road that runs through the eastern section (Phase II) of the site (approximately 0.27 mile long) would be relocated south, positioned directly between PV blocks running east/west. It would remain available for public use. In addition, the Applicant would improve Santa Fe Fire Road and the realigned portion of Zircon Road over the length of the ROW to support construction equipment and vehicles. The road improvements include grading, compaction, and adding 4 to 6 inches of gravel along the realigned portion of Zircon Road (Figure 2-1). The approximately 0.27 miles of Zircon that would no longer be used as an open route would be designated as closed. This area would be used by the project and would be included in the ROW. The newly constructed section of Zircon Road would be designated open. This relocation of Zircon Road would not change access to any destinations.

Portions of Santa Fe Fire Road, south of Foothill Road, could be temporarily closed during construction of the improvements. A permanent on-site parking area would be constructed adjacent to the operation and maintenance building within the Phase I area.

Electric Transmission and Interconnect

To deliver the renewable power generated by the solar plants to market, CES proposes to build a 33-kV collector system, a switchyard and interconnection to the existing SCE 33-kV distribution line that runs next to the site on the north side of Foothill Road.

The 33-kV collector system would be composed of both buried and overhead wiring. Most of the electrical collection system would be installed by directional boring. The system would collect the power generated by each 2-MW transformer in the solar fields and deliver it to the switchyard. The first 20-MW phase would use the electrical output of 18,000 PV panels. The switchyard, which would serve both phases, would consist of a 10-foot by 12-foot concrete pad that would accommodate the utility metering, switchgear, and a protection breaker. Because the power would be stepped up to utility line voltage at the solar field collector system, the switchyard would not require additional step-up transformers.

The existing SCE 33-kV distribution line is fed from SCE's Cottonwood Substation, which is located at the intersection of Camp Rock Road and State Route 18 (SR 18) approximately 3.5 miles southwest of the site. A new 33-kV overhead distribution line, approximately 2 miles long, would be built during Phase I and would carry power from the proposed switchyard, east across Santa Fe Fire Road, and north to Foothill Road, and would tie into the SCE 33-kV distribution line (the utility interconnection point). Nineteen new poles, approximately 40 feet high, would be installed within the project ROW, along the east side of Santa Fe Fire Road. The average work area for the power line would be 30 feet by 80 feet. The proposed alignment of the new poles is shown on Figures 2-5a, b, and c. The SCE facilities system impact study indicates that the existing 33-kV line can accommodate the 20 MW from Phase I of the Proposed Action with no line modifications.

Phase II of the Proposed Action would be constructed once SCE replaces the low-capacity conductor with a new higher capacity conductor. This analysis assumes that this "reconductoring" (i.e., replacing the existing wire with a heavier wire and reusing the existing cross arms and insulators, back to the Cottonwood Substation) would not require new power poles or disturbance within the existing SCE ROW. If additional transmission facilities are required, separate environmental review for those facilities would be conducted.

Operation and Maintenance Building

An O&M building would be constructed to provide maintenance and spare parts storage and would also include an office with electrical power (Figure 2-2).

Site Communications

Site communications between the site switchyard and the Cottonwood Substation would be required. The specific design requirements for this new communications system has not yet been defined by SCE. It is anticipated that a dedicated T1 (data line) would be installed between the site switchyard and the Cottonwood Substation. The T1 line would be installed as an "underbuilt" on existing SCE poles along Camp Road and Foothill Road. From Foothill Road to the site switchyard, the T1 line would be installed on the project's power poles along the east side of Santa Fe Fire Road (Figures 2-5a, b, and c). No additional on- or off-site ground disturbance is anticipated with installation of the T1 data line (Fotowatio Renewable Ventures 2010).

Site Security and Fencing

The perimeter of the site would be fenced with an eight-foot-high security fence, and video cameras would be used to survey the perimeter. Site control would be limited to the area under construction. Within the eastern portion of the site, the fencing would run along the northern and southern edges of the realigned portion of Zircon Road to maintain public access to this route.

Site guards would be trained, uniformed, unarmed personnel. Their primary responsibility would be to control ingress and egress of personnel and vehicles during construction and theft watch during non-working hours. The guards would operate out of the operation and maintenance building located immediately southeast of the facility entrance and would only be on-site during the solar plant's non-working hours (i.e., evening hours).

Erosion Control and Stormwater Drainage

The solar panels would be mounted in a manner that follows the existing topography and, as a result, would not substantially change the natural flow of water across the site. Grading and trenching is required for placement of solar module foundations, underground electric lines, inverter and transformer pads, roads and access ways, and other facilities.

Security and desert tortoise exclusion fencing would be routed through the major drainages. Maintenance of both fences would be performed after major storms to remove any debris that may have accumulated against the fencing and to repair any damage to the fencing. Similarly, drainages on the east side of the property would be fenced and regularly cleared of debris on an as needed basis. Only ephemeral stream crossings are present within the project area. No perennial or intermittent streams are located within the project area. Laydown areas would be located at least 100 feet away from drainages.

During construction CES would implement siltation prevention measures that would be discussed in the Stormwater Pollution Prevention Plan that would be approved by the BLM and the Regional Water Quality Control Board (RWQCB).

M:\San Francisco\Chevron_Lucerne Solar\Maps\MXD\DEIS_July2010\Fig 5-2 33kv_lines.mxd 07.06.10 JB

Base Map Source: Cal-Atlas 2009; ESRI 2009; USGS 1993; California Interagency Watershed Mapping Committee 1999

Figure 2-5a

33-kV Distribution Line Location

Lucerne Valley Solar Project

San Bernardino County, California

This page intentionally left blank

M:\San Francisco\Chevron_Luzerne Solar\Maps\MXD\DEIS_July2010\Fig 5-2 33kv_lines.mxd 07.06.10 JB

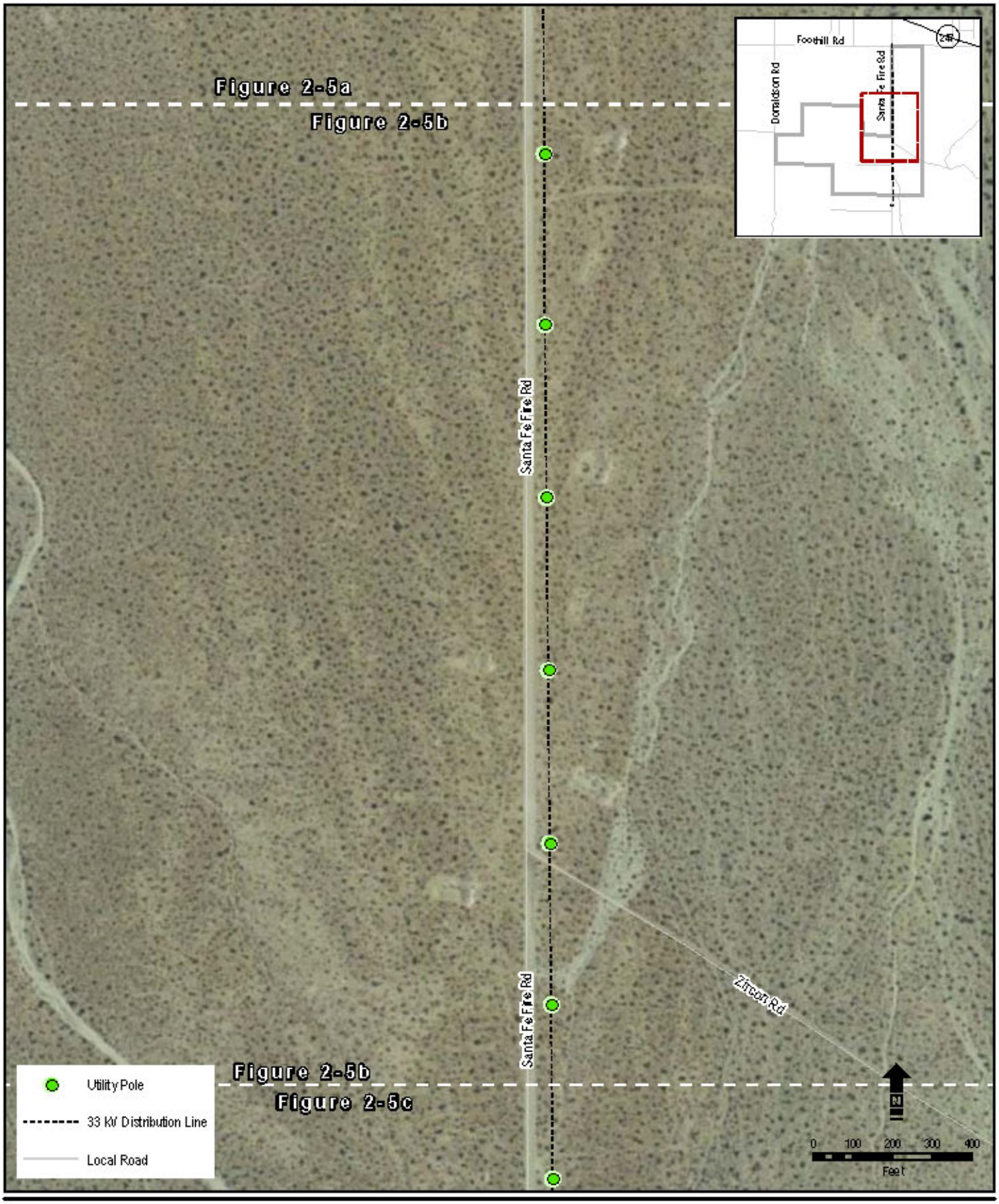

Base Map Source: Cal-Atlas 2009; ESRI 2009; USGS 1993; California Interagency Watershed Mapping Committee 1999

Figure 2-5b

33-kV Distribution Line Location

Luceme Valley Solar Project

San Bernardino County, California

This page intentionally left blank

M:\San Francisco\Chevron_Lucerne Solar\Maps\MXD\DEIS_July2010\Fig 5-2 33kv_lines.mxd 07.06.10 JB

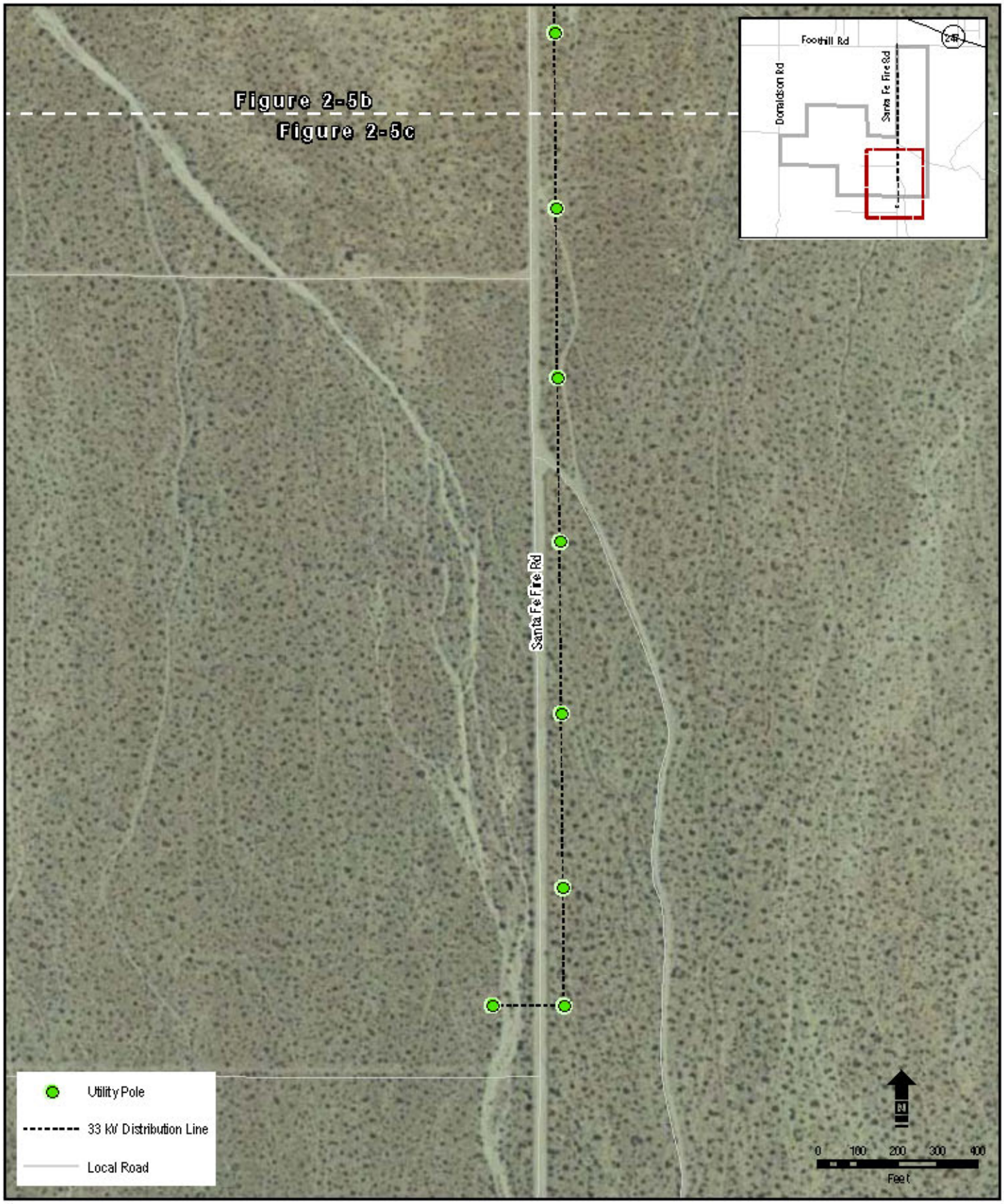

Base Map Source: Cal-Atlas 2009; ESRI 2009; USGS 1993; California Interagency Watershed Mapping Committee 1999

Figure 2-5c

33-kV Distribution Line Location

Lucerne Valley Solar Project

San Bernardino County, California

This page intentionally left blank

A Streambed Alteration Agreement would be prepared and submitted to the California Department of Fish and Game (CDFG) and would describe and authorize any changes to the drainages.

Vegetation Treatment and Weed Management

The Applicant has submitted a Draft Weed Control Plan to BLM (Appendix H), which provides the following:

- Monitoring, preventative, and management strategies for weed control during construction activities;
- Control and management of weeds in areas temporarily disturbed during construction where native seed will aid in site vegetation; and
- A long-term strategy for weed control and management during the operation of the project, including the use of a pre-emergent herbicide.

The objective of the Weed Control Plan is to eliminate individuals of a particular species within a specific area, reducing current infestation density, and preventing infestation expansion and spread. Weed management would occur site-wide; however, specific areas may require unique management considerations. The project has been designed to minimize ground disturbance. Permanently disturbed areas would require ongoing weed monitoring and maintenance during construction, and equipment would be cleaned at wash stations prior to entering the site, if needed. Biological monitors would be on-site during construction to identify the presence of weeds and also to inspect equipment cleaning facilities for weed seed removal. During operations, weed control would be conducted, as needed, by operations personnel trained to identify weedy and native species.

In the area of the PV solar array fields, a pre-emergent herbicide would be applied every winter before germination, to control annual weed species. All herbicide application should end by mid-May and would not resume until the following December with the application of a pre-emergent herbicide. Due to concerns by the USFWS on potential adverse effects of herbicide applications on the desert tortoise, only herbicides with empirically proven low toxicity to test animals in the pesticide use proposal process would be used. This includes post-emergent herbicide formulations with the active ingredient glyphosate and pre-emergent herbicide formulations with the active ingredients bromacil or diuron.

Fire Protection

This alternative would have very few flammable components; however, fire alarms and portable fire extinguishers would be provided to meet fire protection requirements.

Hazardous Materials

CES has submitted a Draft Spill Prevention and Response Plan to the BLM to minimize the potential for a spill, to contain any spillage to the smallest area possible, and to protect areas that are considered environmentally sensitive. It would be implemented during both the construction and operational phases of the project and provides restrictions and procedures for fuel storage, fueling activities, and construction equipment maintenance on the site; vehicle fluid spills; chemical toilet and human waste spills; herbicide spills; and discovery of an unknown hazardous material.

The hazardous materials that may be on-site during construction and operation include those usually associated with operation and maintenance of vehicles and machinery, such as diesel fuel, gasoline, hydraulic fluid, brake fluid, antifreeze, and lubricants. Other materials considered hazardous are chemicals used in portable toilets and the associated human waste and herbicides to control nonnative plant populations. All operations contractor and subcontractor personnel working on the site would be responsible for implementation of the measures and procedures defined in the Spill Prevention and Response Plan. This plan would be included in both the bid and the contract documents as contractual requirements and instructions to the contractor.

Waste Disposal

Nonhazardous solid waste would consist primarily of construction and office wastes that would be trucked to the nearest Type II landfill or to a nearby transfer station. Nonhazardous liquid waste, which would consist primarily of domestic sewage, would be disposed of by a commercial sanitary service. The closest identified solid waste landfill is the Victorville Sanitary Landfill located at 18600 Stoddard Wells Road in Victorville, California.

Dust Control

CES has submitted a Draft Dust Control Plan to BLM that describes all applicable measures to be implemented for this alternative. Construction would result in fugitive dust generation. Fugitive dust is particulate matter that is suspended in the air by wind or human activities and does not come from a point source. The Mojave Desert Air Quality Management District (MDAQMD) is the air quality regulatory agency for this area. Fugitive Dust is regulated under MDAQMD Rule No. 403.2, *Fugitive Dust Control for the Mojave Desert Planning Area* which requires that fugitive dust emissions be minimized through the use of control techniques.

During construction, the following measures would be implemented as part of the Dust Control Plan:

- Use periodic watering for short-term stabilization of disturbed surface area to minimize visible fugitive dust emissions. For the purposes of this Rule, use of a water truck to maintain moist disturbed surfaces and actively spread water during visible dusting episodes shall be considered sufficient to maintain compliance;
- Take actions sufficient to prevent project-related trackout onto paved surfaces;
- Cover loaded haul vehicles while operating on publicly maintained paved surfaces;
- Stabilize graded site surfaces upon completion of grading when subsequent development is delayed or expected to be delayed more than 30 days, except when such a delay is due to precipitation that dampens the disturbed surface sufficiently to eliminate visible fugitive dust emissions;
- Cleanup project-related trackout or spills on publicly maintained paved surfaces within 24 hours; and
- Reduce non-essential earth-moving activity under high wind conditions. For the purposes of this Rule, a reduction in earth-moving activity when visible dusting occurs from moist and dry surfaces due to wind erosion shall be considered sufficient to maintain compliance.

- Provide stabilized access route(s) to the site as soon as is feasible. For the purposes of this Rule, as soon as is feasible shall mean prior to the completion of construction/ demolition activity;
- Maintain natural topography to the extent possible;
- Construct parking lots and paved roads first, where feasible;
- Construct upwind portions of the project first, where feasible; and
- Apply dust palliative, with low environmental toxicity, such as the synthetic polymers like Soil Sement, Soil Seal, and Soilmaster.

During construction, water would be required for dust control and soil compaction. It would be provided through a contract with one of the local large industrial companies or municipal water companies that have high capacity wells and water systems.

The amount of water required would vary significantly depending upon the conditions during construction of Phase I and II. To the extent that it is cost effective, polymers and flocculants could also be used for temporary dust control. The water needed for construction of the first 20 MW phase is estimated at approximately 1.75 million gallons (5.4 acre-feet). This phase is estimated to have the heaviest water use due the road construction and hardening and building construction. The second 25 MW phase is estimated to require approximately 1.25 million gallons of water (4.6 acre-feet). The water would be brought in by truck from an outside source, provided through contract with a local large industrial company or municipal water companies.

Greenhouse Gases

The following measures would be used to minimize GHG emissions during construction:

- All construction equipment would be maintained according to the manufacturers' specifications;
- Fuel for all off-road and portable diesel-powered equipment would be California Air Resources Board-certified motor vehicle fuel (nontaxed version suitable for use off-road);
- All on- and off-road diesel equipment would not be allowed to idle for more than five minutes; and
- Alternatively fueled construction equipment (such as compressed natural gas or biodiesel) would be used if feasible.

2.2.3.4 Construction

Construction Phase I

Preconstruction survey work would consist of staking/flagging the Phase I area boundaries, permanent and short-term work areas, cut and fill staking, access and roads, transmission pole locations, and concrete pads and foundations. Before construction healthy Joshua trees and all cacti, except cholla species, will be flagged for salvage and removed, as feasible.

Initial construction activities would include construction of the desert tortoise exclusion and 8-foot-high security fencing, survey and relocation of tortoises, construction of and improvements on roads, grubbing/scarification to clear the site of unwanted vegetation. Vegetation would be

cleared within the solar field area, from roadways, access ways, and where concrete foundations are used for inverter equipment, substations, and operations and maintenance facilities. Vegetation may also be cleared for construction of the drainage controls. In addition, micrograding would be used to smooth out some of the drainage scarring of the site, promoting sheet drainage, and cutting access paths between the panel rows. Site work would include the following tasks:

- Earthwork, main entrance road, preparation of the storage area, and installation of temporary and permanent site utilities and
- Construction of stormwater diversion and collection channels.

All site work would take place within the fenced area, except installation of the new fiber-optic and distribution lines. Desert tortoise exclusion fences would be constructed with 16-gauge or heavier materials suitable to resist desert environments, alkaline and acidic soils, wind, and erosion. Fence material would consist of 1-inch horizontal by 2-inch vertical, galvanized welded wire, 36 inches in height. Hog rings would be used to attach the fence material to the security fence. Fence material would be buried a minimum of 12 inches below the ground surface, leaving 22 to 24 inches above ground. Desert tortoise exclusion fencing would be attached to the security fencing with hog rings placed at 12- to 18-inch intervals. After the desert tortoise exclusion fence has been installed and secured, excavated soil would be replaced and compacted to minimize soil erosion. In the event that temporary security fencing were used during construction, temporary desert tortoise fencing that is approved by the BLM and USFWS would be used.

Rough site grading, excavation, and backfilling would be performed using heavy duty earthmoving equipment. Cut-and-fill quantities would be balanced in order to have no net export or import of materials from the site. CES would coordinate with the weed specialist at the Barstow Field Office. All cleared ground could be covered with a soil binder or pea gravel.

After the completion of site preparation activities, underground conduit, overhead transmission lines, and inverter and transformer pads would be installed. In sequence, the PV panel supports and frames would be installed. The frames would be secured to foundation members, which are typically H-beams driven to a depth of approximately six feet using percussive or vibration equipment in a manner similar to installing freeway guardrails. If extremely poor soil conditions are found, augured holes with steel members embedded in concrete may be required. Frame tables, consisting of bolted or riveted steel members, either built at the assembly point or shipped preassembled to the site, would then be aligned and fastened to the support members. The PV panels would then be set onto and secured to the frame tables, and licensed electricians would connect the panels and install the aboveground and underground distribution systems. The O&M building would be constructed, including a 33-kV distribution line, which would carry the power from the switchyard across Foothill Road to interconnect with the SCE 33-kV distribution line.

Construction Phase II

Phase II would be constructed in the same manner as Phase I, but Phase II would not require construction of new permanent and temporary work areas or another switchyard or O&M building. The same laydown and construction areas for Phase I would be reused for Phase II.

The SCE facilities system impact study indicates that the existing 33-kV line can carry the 20 MW of the first phase with no line modifications. Without a detailed study, it is difficult to

determine how much additional capacity is on the 33-kV line although a typical figure is approximately 5 to 6 MW. The development capacity for this phase would be limited to the available capacity in the distribution line. The exact capacity is unknown at this point in time. This phase could be developed up to 25 MW.

Temporary Workspace, Yards, and Staging Areas

Indoor storage space would be required only for weather-sensitive components, such as control or electrical panels, or small parts that could easily be misplaced. Some space for material that requires temperature and humidity control would be provided. Other items would be stored outdoors on raised platforms with proper covers or temporary shelters. Construction area lighting would be provided at the warehouse locations. Construction subcontractors would provide storage facilities for material they furnish at the areas designated on the site laydown plan.

Construction roads and parking would be required to provide access to construction facilities and the laydown area. Construction parking space would be provided near the construction office complex. These temporary roads would be all-weather gravel surfaced and of sufficient width and location to accommodate efficient use and traffic pattern. The parking area would have barriers to control parking pattern and locations. Construction parking areas are typically sized to accommodate approximately 100 vehicles.

Schedule

The construction period for each phase of the project is anticipated to be 240 days (8 months). Phase I would begin construction in late 2010, with a projected online date of mid-2011. Phase II would be contingent upon available transmission capacity and future power sales. Construction for Phase II could conceivably begin as early as late 2011 and could possibly be initiated before the completion of Phase I. Conversely, construction could be delayed several years if an analysis of the available capacity is not complete.

Construction for each phase would generally follow the sequence of staking/flagging the perimeter of the project area for each phase (five days), construction of desert tortoise exclusion and 8-foot high security fencing (five days), survey and relocation of tortoises (five days), construction of access roads (five days), site grading and vegetation removal (25 days), assembly and installation of all facilities (190 days), cleanup, and site reclamation of any temporary work areas (10 days).

Installation of the switchyard, underground utilities, and inverters/transformers may proceed in parallel so that the anticipated total construction time would be approximately 240 days/ 8 months for Phase I and 240 days/8 months for Phase II.

Workers, Vehicles, and Equipment Timeframes

Prior to mobilization for construction, a detailed construction plan would be developed to define the construction supervisory and technical field organizations and required staffing levels. On average, 25 construction and supervisory personnel would be on-site for approximately eight months to construct each phase, with 45 personnel being on-site at the peak of construction. Some workers would be local (i.e., permanent residents of San Bernardino County), but it is expected that some would be migrating to the work site from outside of the area. Table 2-2 shows the number of personnel per month required for each phase.

Table 2-2 Alternative 3 (Proposed Action) Construction Labor Force by Month

Month	Phase I	Phase II	Total
1	12	12	24
2	15	15	30
3	15	15	30
4	15	15	30
5	45	45	90
6	45	45	90
7	45	45	90
8	10	10	20
TOTAL	202	202	404

Use of a variety of equipment is expected in order to accomplish installation of Phase I and Phase II. All equipment would be confined to the roadways and within the fenced area. During construction, up to 59 construction vehicles are estimated to drive in and out of the project area in addition to approximately 20 personal vehicles. Table 2-3 shows the amount of equipment required and amount of time they would be run for each phase.

Table 2-3 Alternative 3 (Proposed Action) Construction Equipment List and Hours of Use

Equipment Type	HP Category	Estimated Hours of Use	Estimated Hours of Use
		Phase I	Phase II
Vibratory Post Driver	100–175	4,050	4,050
Crawler Tractors/Dozer	100–175	500	500
Dump, Concrete, and Tender Trucks	On-road	120	120
Excavators	175–300	200	200
Forklifts/Aerial Lifts/Booms	50–100	6,000	6,000
Generator/Compressor	5–15	4,000	4,000
Graders	175–300	80	80
Rollers/Compactors	100–175	500	500
Scrapers	175–300	40	40
Tractors/Loaders/Backhoes	100–175	160	160
Vibratory Plate (hand-held)	10–15	40	40
Highway Tractor	On-road	80	80
Flatbed Truck with Rails	On-road	1,000	1,000
Water Truck	On-road	1,000	1,000

2.2.3.5 Operations and Maintenance

The operation of the power plant would be completely automated. The various power components would be automatically turned on in the morning and turned off at night. Maintenance activities, both scheduled and unscheduled, would require at least partial staffing throughout the life of the project. It is anticipated the plant would have a full-time staff of two to three people and a total of five personal vehicles are likely to drive on and off the site during normal plant operations. The main anticipated operations and maintenance needs would be

inverter inspection, vegetation control, as necessary and routine switchgear inspection. Outside contractors could be used to conduct these operations and maintenance activities.

During operation and maintenance, water would be used primarily for panel washing. CES estimates that the panels would require washing once per year during the summer when power prices and, correspondingly, power production are highest. Panel washing would require approximately 10,050 to 20,100 gallons for Phase I and 12,570 to 25,140 gallons for Phase II, or, correspondingly, 22,620 to 45,240 gallons per year once the entire 45-MW field is built (Fotowatio Renewable Ventures 2010). Water for panel washing would be provided through a contract with one of the local large industrial companies or municipal water companies that have high capacity wells and water systems. No new water sources would need to be developed.

Inverter maintenance would consist of inspection of intake air ducts, cooling fans, and refrigeration units and would be conducted on a monthly schedule (approximately). Inspection of seals, connections, and enclosures would be conducted yearly. Repairs with the inverter would be completed as necessary.

Scheduled maintenance would be contracted to a third-party operation and maintenance contractor and on occasion could involve equipment manufacturers, such as the inverter manufacturer. The following activities would be conducted regularly according to a fixed schedule to be determined when the plant begins operation:

- Solar panel cleaning (annually);
- Array visual and infrared inspection;
- Vegetation and weed management(as needed);
- Inverter maintenance;
- Inspection of intake air ducts, cooling fans, and refrigeration units (monthly);
- Inspection of seals, electrical connections (torque setting), and transformer and inductor enclosure (annually);
- Switchyard maintenance;
- Inspection of perimeter fencing and repairs when needed;
- Monthly inspection and repair, if necessary, of tortoise exclusion fencing; and
- Inspection of protection devices.

Unscheduled Maintenance

Exposure to the elements and equipment failures would require the following maintenance activities:

- Solar panel replacements and
- Troubleshooting, repair, and replacement of
  - Inverters,
  - Switchyard equipment, and
  - Digital control systems.

These maintenance services would be provided by the third-party operations and maintenance contractors and the equipment manufacturers, as necessary.

Operations Workforce and Equipment

As previously stated, the plant is expected to have a staff of only two to three people during regular operations, including a security officer during non-working hours, although large maintenance tasks, such as panel washing, would require the presence of full-time personnel for the duration of the task. Operations equipment would include all-terrain vehicles capable of going inside the array for physical inspection and parts replacement.

2.2.3.6 Decommissioning

The expected life of the project would be 30 years. Given the unique and extreme levels of solar radiation at the site, it is highly plausible that new and improved solar power generating technology would be deployed at the site to continue renewable power generation. However, should the site be removed from power generation service, the site would be made suitable for reclamation. All equipment, buildings, concrete foundations, and driven piles would be removed from the site. The site would be restored as much as feasibly possible. To prevent excess erosion after decommissioning, CES would document the topographical and erosional condition of the site before and after decommissioning. CES would develop and implement a post-project erosion control plan and inspect the site quarterly for five years following decommissioning to determine the status of erosion. CES would submit an annual report to the BLM documenting the status, and the BLM would determine if corrective actions were necessary to reduce the amount of erosion taking place.

Consistent with BLM requirements, CES would prepare a detailed decommissioning plan that includes specific decommissioning procedures that both protects public health and safety and is environmentally acceptable. The BLM would have to approve the decommissioning plan before permanent decommissioning. When the BLM begins to consider decommissioning, it would contact the USFWS to determine whether additional Section 7 consultation would be appropriate. Materials used on-site would be reused at other locations, sold as scrap, or recycled whenever possible.

A separate NEPA document would be completed to develop alternatives to consider and to analyze the potential affects of the alternatives for decommissioning and reclamation. A bond would be required from the applicant to ensure that decommission and reclamation is completed.

2.2.3.7 U.S. Department of Energy Loan Guarantee

The Applicant is committed to building the authorized project whether or not the Applicant receives a loan guarantee from the U.S. Department of Energy (DOE). The project would be constructed, operated, and maintained and decommissioned in the same manner whether or not a loan guarantee is approved by DOE.

2.2.4 Alternative 4: Modified Site Layout

In response to comments received during public scoping, the BLM is analyzing an alternative that reduces effects on visual resources. This alternative would be the same as the CES's Proposed Action, including the rerouting of Zircon Road, with three modifications to reduce environmental effects:

1. Require a 50-foot setback from Santa Fe Fire Road
2. Use natural vegetation as a screen; and
3. Design site drainage to provide a water source for the vegetative screen if feasible through the Streambed Alteration Agreement.

To reduce the visual effects, the minimum distance from the edge of Santa Fe Fire Road that the perimeter fence could be located (or set back) would be increased to 50 feet. The setback would remain unaltered by the project construction, so the existing vegetation would serve to screen the project area from nearby residents and somewhat for users of Santa Fe Fire Road. Additionally, the area immediately inside the fence could be used to replant any native vegetation that would otherwise be removed during site preparation activities. Some of the drainage for the graded area could be redirected to flow from the site into the setback, increasing the water available to the setback vegetation.

The project components, project phasing, energy generation, access roads, transmission interconnect, and construction methods would be the same as those previously described for CES's Proposed Action. About 97 percent of the ROW would be used for the solar panels, and the remaining area would be used for roads, power lines, switchyard, a control/maintenance building, and a parking area. The general dimensions of the project components and site disturbance for Alternative 4 are detailed in Table 2-4.

Table 2-4 Alternative 4 (Modified Site Layout) Project Components, Dimensions, and Site Disturbance

Project Components	Site Disturbance (acres)
Areas to be Graded/Developed	
Switchyard (10 feet x 12 feet)	0.003
Operations and Maintenance Building (12 feet x 20 feet)	0.006
Parking/Laydown area (250 feet x 50 feet)	0.5
Access roads within project site (20 feet x 3 miles) [(a)]	7
Power line within project site (20 feet x 2 miles)	5
Subtotal of Areas Graded/Developed	*12.509*
Areas to be Grubbed/Scarified	
Solar Array for Phase I (includes inverters and transformers)	171
Solar Array for Phase II (includes inverters and transformers)	238
Subtotal of Areas Brushed/Developed	*409*
Total Area Developed	*422*
Total Area Undeveloped managed as BLM multiple use, not included in ROW	*94*
TOTAL RIGHT OF WAY	422

(a) Includes Zircon Road realignment.
(b) Area reduced by inclusion of buffer along Santa Fe Fire Road.

Proposed CDCA Plan Amendment

Implementation of Alternative 4 would require an amendment to the CDCA Plan that would change the designation within the ROW to suitable for large-scale commercial solar energy generation.

U.S. Department of Energy Loan Guarantee

The Applicant is committed to building the authorized project whether or not the Applicant receives a loan guarantee from the DOE. Alternative 4 would be constructed, operated, and maintained and decommissioned in the same manner whether or not a loan guarantee is approved by DOE.

2.2.5 Alternative 5: Smaller Project Alternative

This alternative reduces the output of the solar power plant from 45 MW to 30 MW. This alternative would also reduce the size of the developed area to 238 acres (Figure 2-6). A portion of the area west of Santa Fe Fire Road, similar to Phase I under Alternative 3, and the area east of Santa Fe Fire Road, similar to Phase 2 under Alternative 3, would be developed. However, under this alternative, the area south of the relocated Zircon Road would not be developed and the furthest western portion of the site would not be developed. Therefore, 120 acres would be developed west of Santa Fe Fire and 108 acres east of Santa Fe Fire Road.

Components

The solar field, switchyard, operation and maintenance building, parking/laydown area, access roads and power lines, would occupy 238 acres. The granted ROW would be reduced to 238 acres. About 96 percent of the ROW would be used for the solar panels, and the remaining area would be used for roads, power lines, switchyard, a control/maintenance building, and a parking area. The general dimensions of the project components and the site disturbance are detailed in Table 2-5.

Table 2-5 Alternative 5 (Smaller Project Alternative) Project Components, Dimensions, and Site Disturbance

Project Components	Site Disturbance (acres)
Areas to be Graded/Developed	
Switchyard (10 feet x 12 feet)	0.003
Operations and Maintenance Building (12 feet x 20 feet)	0.006
Parking/Laydown area (250 feet x 50 feet)	0.5
Access roads within project site (20 feet x 3 miles) *	5.5
Power line within project site (20 feet x 1.7 miles)	4
Subtotal of Areas Graded/Developed	*10.009*
Areas to be Grubbed/Scarified	
Solar Array for Phase I (includes inverters and transformers)	120
Solar Array for Phase II (includes inverters and transformers)	108
Subtotal of Areas Brushed/Developed	*228*
Total Area Developed	*238*
Total Area Undeveloped managed as BLM multiple use, not included in ROW	*278*
TOTAL RIGHT OF WAY	238

* Includes Zircon Road realignment.

M:\SanFrancisco\Chevron_LuzerneSolar\
Maps\MXD\DEIS_July2010\Fig 2-6 Solar Panels.mxd

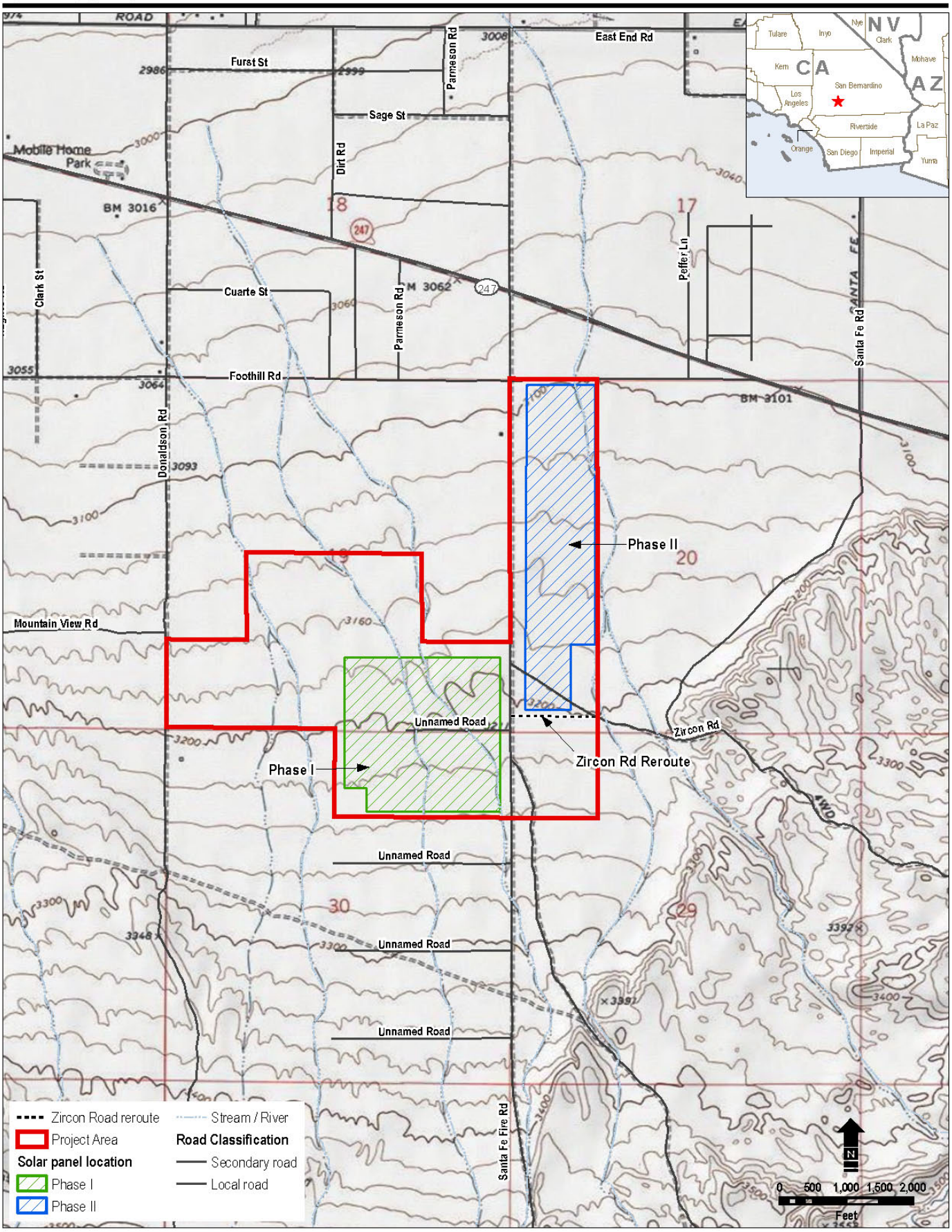

Base Map Source: Cal-Atlas 2009; ESRI 2009; USGS 1993;
California Interagency Watershed Mapping Committee 1999

Figure 2-6

Alternative 5 Site Map

Lucerne Valley Solar Project

San Bernardino County, California

This page intentionally left blank

The project components would be the same as those identified for Alternative 3. The only differences are:

- The land in Phase I in Alternative 3 would not be entirely developed (120 versus 240 acres);
- The land is Phase II in Alternative 3 would not be developed south of the relocated Zircon Road (108 versus 180 acres); and
- The water use for construction would be approximately 1.65 million gallons (5.06 acre feet) since only 55% of CES's Proposed Action (Alternative 3) footprint would be developed;

Construction

Preconstruction survey work, initial construction, grading, and installation of the infrastructure for the western part of the project area would be the same or similar to what is expected for Phase I of Alternative 3, except that only 120 acres would be developed.

Preconstruction survey work, initial construction activities, grading, and installation of the infrastructure for the eastern part of the project site would be similar to what is expected for the eastern portion of Phase I of Alternative 3 with the exception being that the area south of the relocated Zircon Road is not developed.

The construction period for the western part of this Alternative is anticipated to take 180 days. Initial construction would begin in late 2010, with a projected online date of mid-2011. The construction period for the eastern part of this Alternative is anticipated to take 90 days. Construction could conceivably begin in 2011 but could be delayed several years if an analysis of the capacity is not complete.

The construction sequence would generally follow the sequence of staking/flagging the perimeter of the project area for each phase (five days), construction of desert tortoise and security fencing (five days), survey and relocation of tortoises (five days), construction of access roads (five days), site grading (15 days), assembly and installation of all facilities (145 days), cleanup, and site reclamation of any temporary work areas (10 days).

An average of 24 construction and supervisory personnel would be on-site to construct the western portion of the plant, with 45 personnel being on-site at the peak of construction. For the eastern portion an average of 34 construction and supervisory personnel would be on-site to construct the plant, with 45 personnel being on-site at the peak of construction. The number of workers by month for each phase is shown in Table 2-6. Table 2-7 shows the amount of equipment required and amount of time they would be run for each phase.

Operations and Maintenance

Operations and maintenance as well as unscheduled maintenance would be the same as Alternative 3, although only 20,000 to 30,000 gallons of water would be used for annual panel washing. The operational workforce would be the same.

The decommissioning of the project under this alternative would be the same as Alternative 3.

Table 2-6 Smaller Project Alternative (Alternative 5) Staffing by Month

	Month					
	1	2	3	4	5	6
Construction Labor Force western portion	12	15	15	45	45	10
Construction Labor Force eastern portion	12	45	45			

Table 2-7 Smaller Project Alternative (Alternative 5) Equipment List

Equipment Type	HP Category	Estimated Hours of Use western portion	Estimated Hours of Use eastern portion
Vibratory Post Driver	100–175	2,430	1,215
Crawler Tractors/Dozer	100–175	300	150
Dump, Concrete, and Tender Trucks	On-road	80	40
Excavators	175–300	120	60
Forklifts/Aerial Lifts/Booms	50–100	4,000	2,000
Generator/Compressor	5–15	2,400	1,200
Graders	175–300	48	24
Rollers/Compactors	100–175	300	150
Scrapers	175–300	24	12
Tractors/Loaders/Backhoes	100–175	96	48
Vibratory Plate (hand-held)	10–15	24	12
Highway Tractor	On-road	48	24
Flatbed Truck with Rails	On-road	600	300
Water Truck	On-road	600	300

Proposed CDCA Plan Amendment

Alternative 5 would require amending the CDCA Plan to change the designation of the land in the ROW designation to suitable for solar energy development.

U.S. Department of Energy Loan Guarantee

The Applicant is committed to building the authorized project whether or not the Applicant receives a loan guarantee from the DOE. Alternative 5 would be constructed, operated, and maintained and decommissioned in the same manner whether or not a loan guarantee is approved by DOE.

2.3 Alternatives Considered but Eliminated from Detailed Analysis

Alternate BLM Land

Various technical and environmental criteria were used by the Applicant in deciding on the site of CES's Proposed Action. CES first conducted an internal analysis to identify minimum project needs, such as site topography, proximity to transmission and other factors. Excess capacity on existing transmission lines and proximity to existing transmission lines and substations were

also prime site selection considerations. Potential sites were eliminated if they were located near existing transmission lines that could not carry the power to market. Because of Western Electricity Coordinating Council reliability standards, the Applicant eliminated sites from further consideration if they would have required the use of corridors that were not rated for the additional power.

After this initial analysis by the applicant, in accordance with 43 C.F.R. 2804.10, the BLM worked closely with the project proponent during the pre-application phase to identify potential areas for their proposed project before CES filed an application with the BLM. BLM discouraged the applicant from including in their application alternate BLM locations with significant environmental concerns, such as critical habitat, Areas of Critical Environmental Concern, Desert Wildlife Management Areas, designated off-highway vehicle areas, wilderness study areas, and designated wilderness areas or other sensitive resources. BLM encouraged the Applicant to locate its project on public land with the fewest potential conflicts.

Several locations on BLM managed land were evaluated, but each was rejected for one or more reasons. The location of the alternative sites considered is shown on Figure 2-7. The Palen Site, located over 100 miles to the southeast of the proposed site in Riverside County (Figure 2-6), is a 640-acre property that was dismissed from full consideration because it lacked suitable transmission capacity. The tract consisted of Sonoran creosote brush scrub. Additionally, one federally-listed species, the Harwoods' milkvetch, is located near to the site (CEC 2009).

A second location, Cottonwood Site 1 (Figure 2-7), located about three miles to the southwest of the proposed site, is a 160-acre property for which the BLM had concerns about the potential for effects to biological resources. It is located within an area that is home to carbonate endemic plants, which thrive in dry carbonate soils on the lower slopes of the San Bernardino National Forest and BLM land. The area is home to several federally protected plant species including the endangered Cushenbury oxytheca (BLM 2010.)

A third alternative location, Cottonwood Site 2, located about four miles to the southwest of the proposed site next to Cottonwood 1 (Figure 2-7) is an 80-acre property that was deemed too small and had prohibitive drainage concerns. The area contains arroyos and shows susceptibility to severe erosion during flood events. Because of the topography and its size, this site was deemed to be an undesirable location to build a solar plant.

Once presented with an application for a facility on a specific BLM managed project area, and after the pre-application process of eliminating areas with obvious significant environmental or logistical concerns, BLM must make a decision to grant the ROW requested in the application, grant it with modifications, or to deny the ROW requested. Identifying alternative land is beyond the scope of this EIS and does not meet the purpose and need, which is to process a ROW application. Should BLM decide to deny the ROW, the Applicant can pursue any other energy development methods, technology, and locations that the Applicant desires, including applying for a different BLM land parcel.

Private Land

Private land alternatives were not considered because BLM does not have the authority to permit a project on private land, and it would not meet BLM's purpose and need which is to consider the application as proposed or as modified. CES did not propose private land alternatives because they did not believe such options to be economically feasible because they would need to enter into several agreements with landowners to assemble a large enough tract to build the facility. This would have required them to enter into long-term leases without

assurance that the necessary permits and approvals would be issued. CES did not believe this process was economically feasible. Therefore, private lands were not proposed by CES.

Alternate Power Generating Technologies

While BLM does not advocate specific energy technologies, it does consider the relative effects of various technologies when evaluating applications to utilize the public lands. The following descriptions summarize information from the *Best Management Practices & Guidance Manual: Desert Renewable Energy Projects*, Developed collaboratively among the California Energy Commission, California Department of Fish and Game, BLM, and the U.S. Fish and Wildlife Service. October, 2009 (CEC-700-2009-016-SD).

Concentrating Solar Power Technologies

CES did not propose using solar thermal technology for the project because of the long-term costs inherent in maintenance and operations. Solar thermal arrays require more water and personnel to maintain optimal energy production efficiency.

In addition to the PV technology included in CES's Proposed Action, concentrating solar power (CSP) is another solar energy technology potentially suitable for use in utility-scale applications. Use of either technology requires large areas for solar radiation collection. For example, a 200-MW concentrating parabolic trough solar thermal power plant will generally require two square miles or 1,280 acres of land (CES 2009).

CSP technologies use mirrors to concentrate (focus) the sun's light energy and convert it into heat to create steam to drive a turbine that generates electrical power. The power plants consist of two parts: one that collects solar energy and converts it to heat and another that converts the heat energy to electricity. CSP plants are thermal electric generating power plants and thus produce waste heat that must be dissipated to the atmosphere. Some use forced-draft wet cooling towers that release the waste heat to the ambient atmosphere by the evaporation of water. Forced-draft wet cooling towers use large fans to provide air movement upward through falling water and are rectangular, box-like structures. Some use dry cooling radiators that have large fans to draw air through the radiator to reject the waste heat. Dry cooling towers have lower efficiency and higher energy consumption than wet, evaporative cooling towers, due to the required fans.

Generally, three types of CSP technologies are expected to be sited in the desert region including parabolic trough, power tower systems, and dish/engine systems.

1. Parabolic trough systems use large curved (parabolic) reflectors (focusing mirrors) that have oil-filled pipes running along their focal point. The mirrored reflectors track the sun on a single axis and focus sunlight on the pipes to heat the oil inside to as much as 750°F. The hot oil is sent to a heat exchanger to heat water into high temperature steam to run conventional steam turbines and generators.
2. Power tower systems, also called central receivers, use many large, flat heliostats (mirrors) to track the sun on two axes and focus its rays onto a receiver. The receiver sits on top of a tall tower in which concentrated sunlight heats water into steam or a fluid, such as molten salt, to temperatures as hot as 1,050°F. The molten salt can be used immediately in a heat exchanger to make high temperature steam for electricity generation, or it can be stored for later use.

M:\SanFrancisco\Chevron_LuzerneSolar\
Maps\MXD\DEIS_July2010\Fig 2-7 CES_Alternative_Sites.mxd

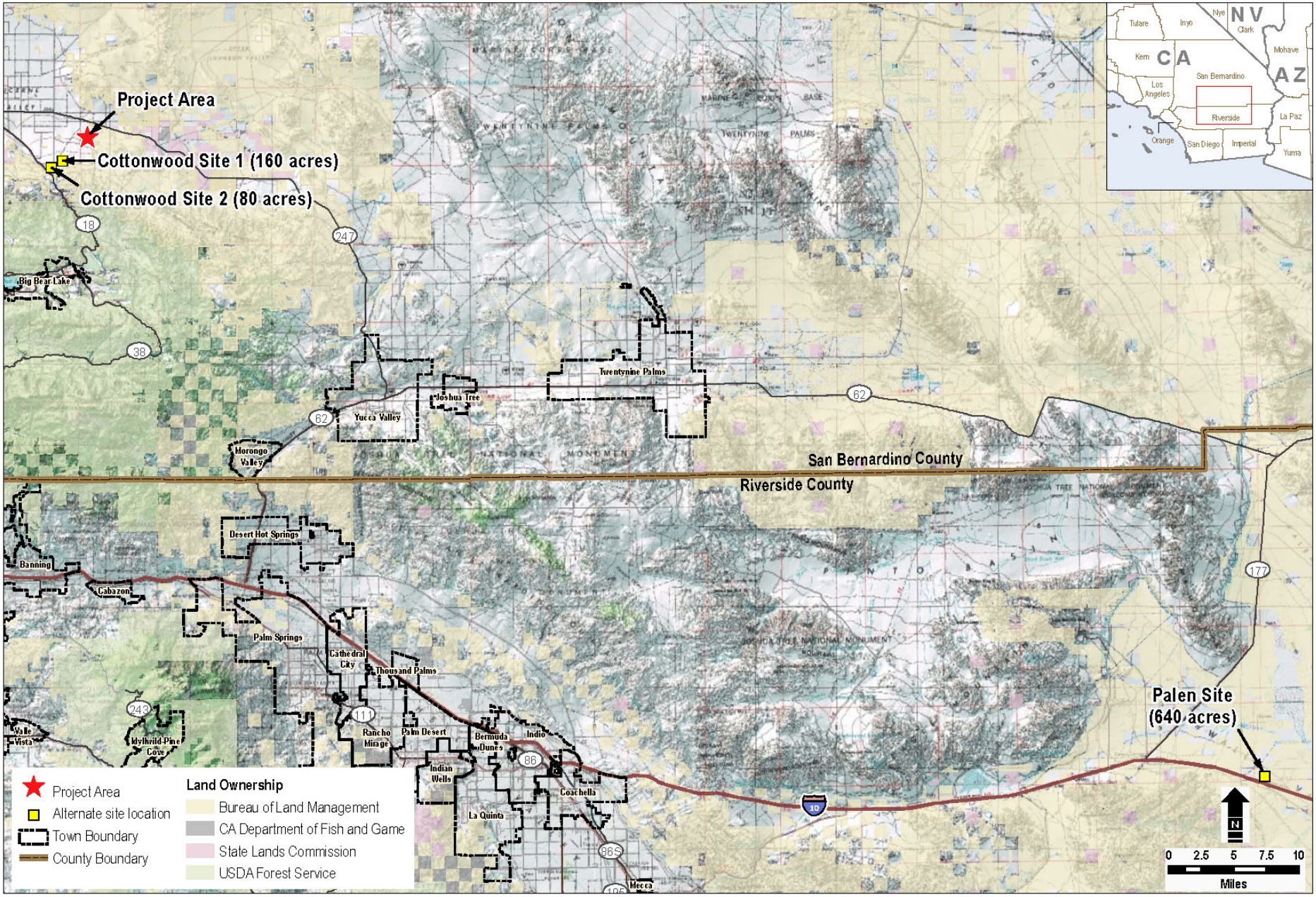

Base Map Source: Cal-Atlas 2009; ESRI 2009; USGS 1993;
California Interagency Watershed Mapping Committee 1999

Figure 2-7

Alternative Sites Considered during CES Project Siting Process

Lucerne Valley Solar Project

San Bernardino County, California

This page intentionally left blank

3. Dish/engine systems use mirrored dishes from 20 to 40 feet across to focus and concentrate sunlight onto a receiver. The receiver is mounted at the focal point of the dish. To capture the maximum amount of solar energy, the dish assembly tracks the sun across the sky on two axes. The receiver is integrated into a high-efficiency "external" combustion engine. The engines use hydrogen or helium gas as the working fluid to move piston(s) to generate electricity. The receiver, engine, and generator comprise a single, integrated assembly mounted at the focus of the mirrored dish.

None of the CSP technologies described above would substantially reduce the size of the site required to generate 45 MW of renewable energy. Ground disturbance and the associated effects would not be reduced. In addition, the structures required would be larger than those identified for CES's Proposed Action and would not reduce visual effects. Since the mirrors must be maintained in a clean state to function properly, this technology consumes a much greater volume of water than CES's Proposed Action. Therefore, an alternative power generating technology was eliminated from further consideration

Wind Energy

Modern wind energy development uses utility-sized turbines that typically range from 100 kW up to 5 MW to convert the wind's kinetic energy to electricity. These turbines primarily are grouped into large wind farms, which produce power for the electric grid. Turbines catch the wind's energy with their propeller-like blades. Usually, two or three blades are mounted on a shaft to form a rotor. A blade acts much like an airplane wing. When the wind blows, the rotor spins like a propeller, and the turning shaft spins a generator to make electricity.

The largest installed wind turbines in the country can stand up to 300-feet tall and have rated capacities of up to 5 MW. The length of the blades and height of the wind turbines vary according to site-specific location and wind-speed. Larger, taller turbines capture winds at higher elevations and are more powerful because of the larger swept-area of the blades. Wind energy developments, also called "wind farms," typically occur on ridgelines, mountain passes, foothills, or flatter, open desert lands to take advantage of the higher wind speeds. The farms include roads, buildings, equipment yards, electrical substations and related transmission lines.

National Renewable Energy Laboratory data identified this area as "poor to marginal" for wind energy potential (DOE 2010.) Based on the local wind energy potential at the site, this technology was not fully analyzed.

Four Sided Project

To potentially reduce impacts to species a four sided project with fewer boundaries was considered. Land to the west of the project side and surrounding the western part of the project are privately owned. Public land to the east has a slope that is too steep for solar energy development. It is also less geologically stable. So, due to the small amount of public land near the project site, the size needed for the project, and the available public land with the desirable slope for solar energy development, it is not possible to configure the project into a four sided parcel. Thus this alternative was not feasible or fully analyzed.

Residential Roof Top Solar Panels

One comment received during scoping discussed alternative renewable power generation, including the use of roof top solar panels on residences instead of CES's Proposed Action. In California, construction of roof top solar panels on homes requires electrical upgrades to

interconnect the panels to the local distribution lines to allow sales of excess energy to the grid and installation of meters. It also requires an agreement between all the necessary property owners and the Applicant for the use of rooftops, as well as, an agreement between the property owners and utility to buy back the excess power, which has to be renewed when the property is sold. The BLM recognizes that roof top solar panels could produce renewable energy, and the Applicant is free to pursue that type of development in addition to the proposed solar project. Should BLM decide to deny the ROW, the Applicant can pursue any other energy development methods, technology, and locations that the Applicant desires, including using roof top solar panels for energy development.

2.4 Comparison of Alternatives

Table 2-8 is a comparison of the features of each alternative.

2.4.1 Preferred Alternative

The BLM has identified a combination of Alternative 3 –the Proposed Action, and Alternative 4 – Modified Site Layout as the Preferred Alternative. This combination of alternatives includes all of the features in Alternative 4, with the exception of rerouting some of the surface water drainage to provide additional water to the vegetative screen area. The surface water would follow the natural pathways as identified in Alternative 3.

In developing alternatives, it was thought that some plants would be relocated to the vegetative screen area. To provide additional water to the relocated plants, alternative 4 proposes to reroute some surface water drainage to that area. It was expected that drainage water would have been routed around the maintenance building to provide the additional water to the vegetative screen area. Since publishing the DEIS, BLM has researched the viability of transplanting desert vegetation and has determined that the survival of the plants would be minimal. CES is working with San Bernardino County to develop a Cactus and Yucca Salvage Plan to determine a more effective method to salvage vegetation that would be impacted from the project. Also, CES has decided to relocate the maintenance building to the western portion of the site. Additionally, the vegetation in the screen area is very healthy with the current water that naturally flows to that area. For these reasons, it is no longer practical to reroute additional water to the vegetation screen area.

The Preferred Alternative would include all of the Best Management Practices listed in Section 2.2.2.3 and the mitigation measures identified in Chapter 4 of this EIS. This alternative provides the least environmental impacts to resources while allowing the development of a renewable energy project at the full capacity requested by the applicant. The Preferred Alternative is also the environmentally preferred alternative.

Table 2-8 Comparison of Project Components and Project Features

	Alternative 1 No Action	Alternative 2 Land Use Plan Amendment	Alternative 3 CES's Proposed Action	Alternative 4 Modified Site Layout	Alternative 5 Smaller Project Alternative
Project Components					
Renewable Energy Generation	0 MW	0 MW	45 MW	45 MW	30 MW
Areas to be Graded/Developed (acres)					
Switchyard: (10 feet x 12 feet)	0	0	0.003	0.003	0.003
Operations & Maintenance Bldg (12 feet x 20 feet)	0	0	0.006	0.006	0.006
Parking/Laydown area (250 feet x 50 feet)	0	0	0.5	0.5	0.5
Access roads within project site (a)	0	0	7	7	5.5
Power line within project site	0	0	5	5	4 (d)
Subtotal of Areas Graded/Developed	0	0	*12.509*	*12.509*	*10.009*
Areas to be Grubbed/Scarified	0	0			
Solar Array for Phase I (includes inverters and transformers)	0	0	180	171 (b)	108
Solar Array for Phase II (includes inverters and transformers)	0	0	240	238 (b)	120
Subtotal of Areas Brushed/Developed	*0*	*0*	*420*	*409*	*228*
Total Area Developed (acres)	0	0	*433*	*422*	*238*
Total Area Undeveloped (acres)	0	0	*83*	*0 (e)*	*0 (e)*
TOTAL RIGHT OF WAY	0	0	516	422	238
Construction Length (days)	0	0	240	240	180
Max Number of Workers (c)	0	0	45	45	45
Estimated Water Use					
Construction – Phase I (acre-feet)	0	0	5.4	5.4	5.4
Construction – Phase II (acre-feet)	0	0	4.6	4.6	2.3

Table 2-8 Comparison of Project Components and Project Features

	Alternative 1 No Action	Alternative 2 Land Use Plan Amendment	Alternative 3 CES's Proposed Action	Alternative 4 Modified Site Layout	Alternative 5 Smaller Project Alternative
Estimated Water Use (continued)					
Panel Washing (gallons per year for Phases I & II)	0	0	22,620 to 45,240	22,620 to 45,240	20,000 to 30,000
Project Features					
CDCA Plan Amendment	No	Yes	Yes	Yes	Yes
Solar Panels	No	No	Yes	Yes	Yes
Access Roads	No	No	Yes	Yes	Yes
Transmission and Interconnect	No	No	Yes	Yes	Yes
Reconductoring of existing SCE Distribution Line	No	No	Yes	Yes	No
Operation and Maintenance Building	No	No	Yes	Yes	Yes
Site Communications	No	No	Yes	Yes	Yes
Site Security and Fencing	No	No	Yes	Yes	Yes
Erosion Control and Stormwater Drainage	No	No	Yes	Yes	Yes
Stream Alteration Agreement/ 401 Water Quality Certification	No	No	Yes	Yes	Yes
Vegetation Treatment and Weed Management	No	No	Yes	Yes	Yes
Fire Protection	No	No	Yes	Yes	Yes
Hazardous Materials	No	No	Yes	Yes	Yes
Waste Disposal	No	No	Yes	Yes	Yes
Dust Control	No	No	Yes	Yes	Yes
Vegetative Screen	No	No	No	Yes	No

Notes:
(a) Includes Zircon Road realignment.
(b) Reflects setback areas along Santa Fe Fire Road.
(c) During Peak Construction Month.
(d) Alternative 5: Length of power line approximately 1.7 miles.
(e) Undeveloped area managed as BLM multiple use, not included in ROW.