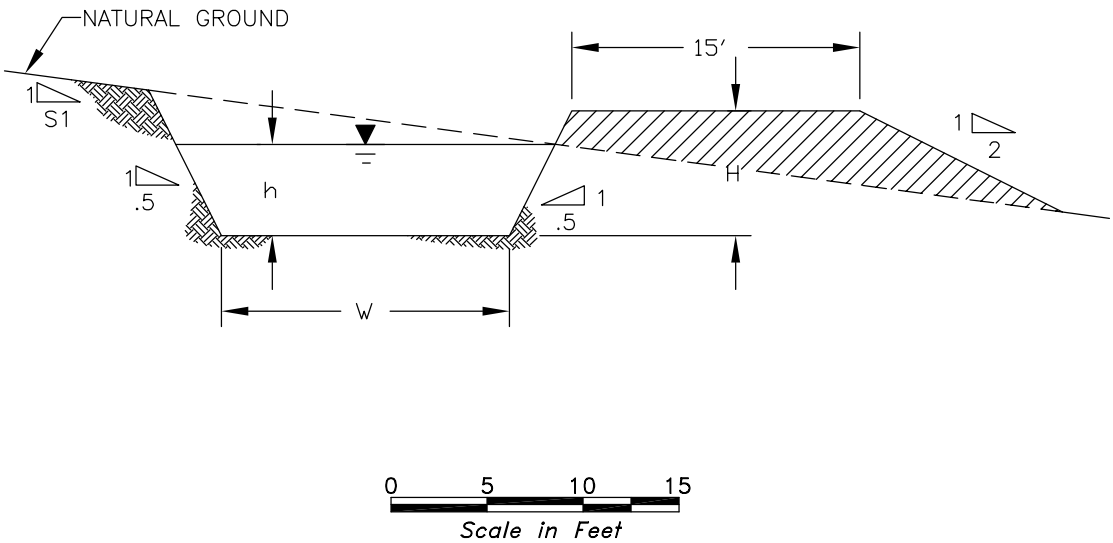

LEGEND

GROUND

FILL MATERIAL

PRELIMINARY
NOT FOR CONSTRUCTION
OR RECORDING

Source: Dames & Moore 1998C

DOS POBRES/SAN JUAN PROJECT

Graham County, Arizona T.5S.R.26E. T.6S.R.26E.

TYPICAL DIVERSION CHANNEL
CROSS-SECTION
FIGURE 2-8

Proj. #: 1700-021 File: G:\ACAD\SAFFORD\2002_FEIS Drawing: A09481.DWG Drwn by: DS Chk'd by: TER Date: 04-21-97 Rev: 7-1-98