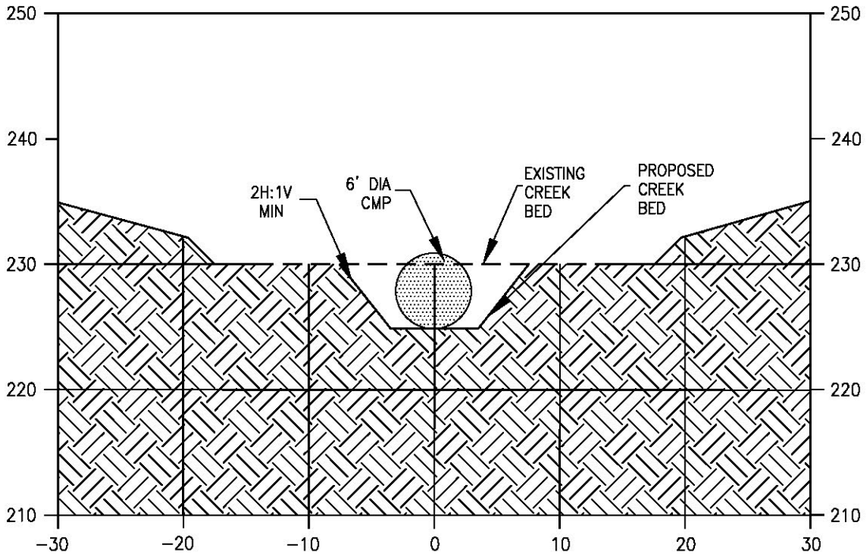

DETAIL
TYPICAL IDEALIZED CULVERT CROSS SECTION (TYP) 3/X

NTS

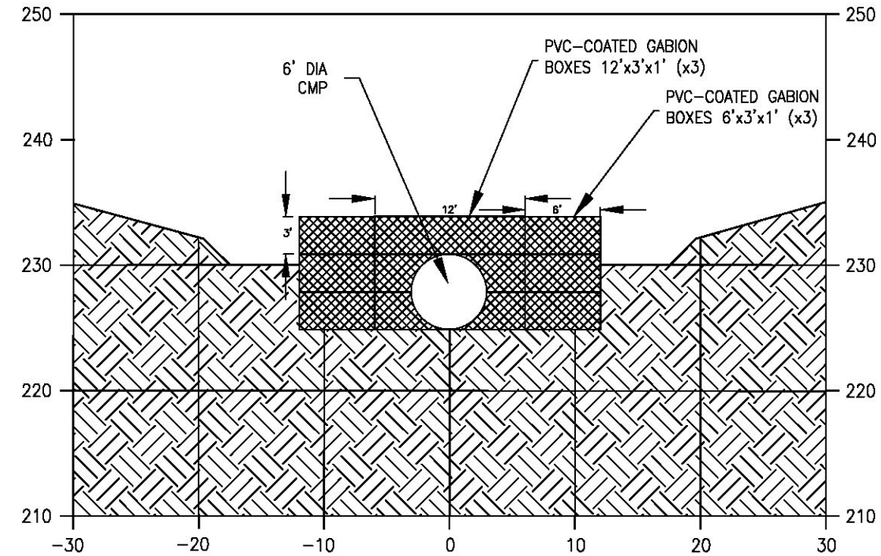

DETAIL
IDEALIZED HEADWALL & CULVERT CROSS SECTION 4/X

NTS

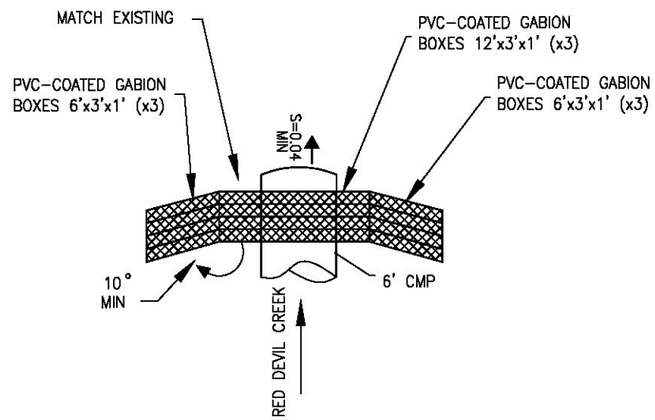

DETAIL
PLAN VIEW OF HEADWALL & CULVERT INLET 5/X

NTS

Prepared For:
UNITED STATES DEPARTMENT OF THE INTERIOR
BUREAU OF LAND MANAGEMENT
ANCHORAGE FIELD OFFICE
4700 BLM Road
Anchorage, AK 99507

Prepared By:
Ecology and Environment, Inc.
720 Third Ave., Suite 1700
Seattle, WA 98104

NO.	DATE	DWN	APP'D	DESCRIPTION

REVISIONS

ecology and environment, inc.

DESIGNED BY: J. JENKINS
CHECKED BY: N. BROWN P.E.
DRAWN BY: V. GEE

DRAFT

DRAFT

RED DEVIL MINE EECA RED DEVIL, ALASKA

FIGURE 4 - 5: DETAIL 3,4 & 5

ALTERNATIVE 3 - CULVERT LINER & HEADWALL

SCALE	DATE ISSUED	CAD FILE NO.	DRAWING NO.
NOTED	11-25-13	CHICAGO\PROJECT\START\RED DEVIL\EECA\CAD	5 OF 7