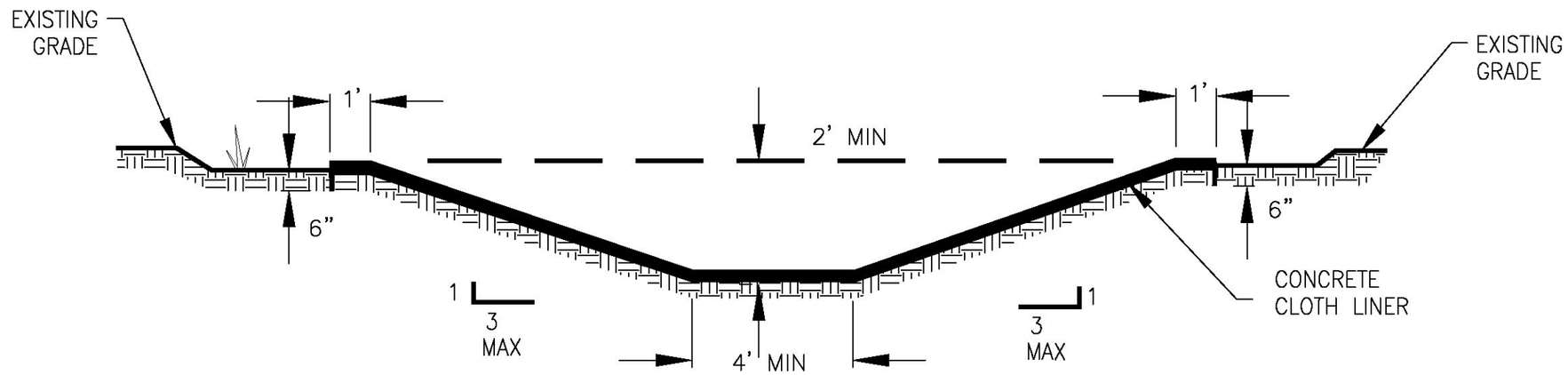

DETAIL 1/X

IDEALIZED CROSS SECTION WITH CHANNELIZATION & CONCRETE CLOTH LINER (TYP)

NTS

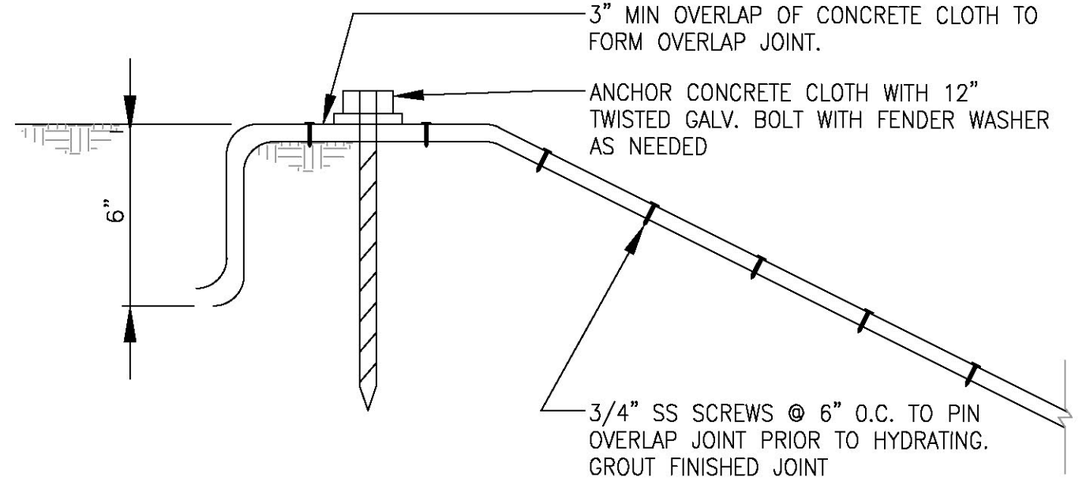

DETAIL 2/X

CONCRETE CLOTH ANCHOR AND OVERLAP JOINT DETAIL

NTS

Prepared For:
UNITED STATES DEPARTMENT OF THE INTERIOR
BUREAU OF LAND MANAGEMENT
ANCHORAGE FIELD OFFICE
4700 BLM Road
Anchorage, AK 99507

Prepared By:
Ecology and Environment, Inc.
720 Third Ave., Suite 1700
Seattle, WA 98104

NO.	DATE	DWN	APP'D	DESCRIPTION

REVISIONS

ecology and environment, inc.

DESIGNED BY: J. JENKINS
CHECKED BY: N. BROWN P.E.
DRAWN BY: V. GEE

DRAFT

DRAFT

RED DEVIL MINE EECA RED DEVIL, ALASKA

FIGURE 4 - 4: DETAILS 1 & 2

ALTERNATIVE 2 - CONCRETE CLOTH LINER

SCALE	DATE ISSUED	CAD FILE NO.	DRAWING NO.
NOTED	11-25-13	CHICAGO\PROJECT\START\RED DEVIL\EECA\CAD	4 OF 7