TOWNSHIP 13 SOUTH RANGE 42 EAST OF THE WILLAMETTE MERIDIAN, OREGON

VALE DISTRICT - BAKER RA

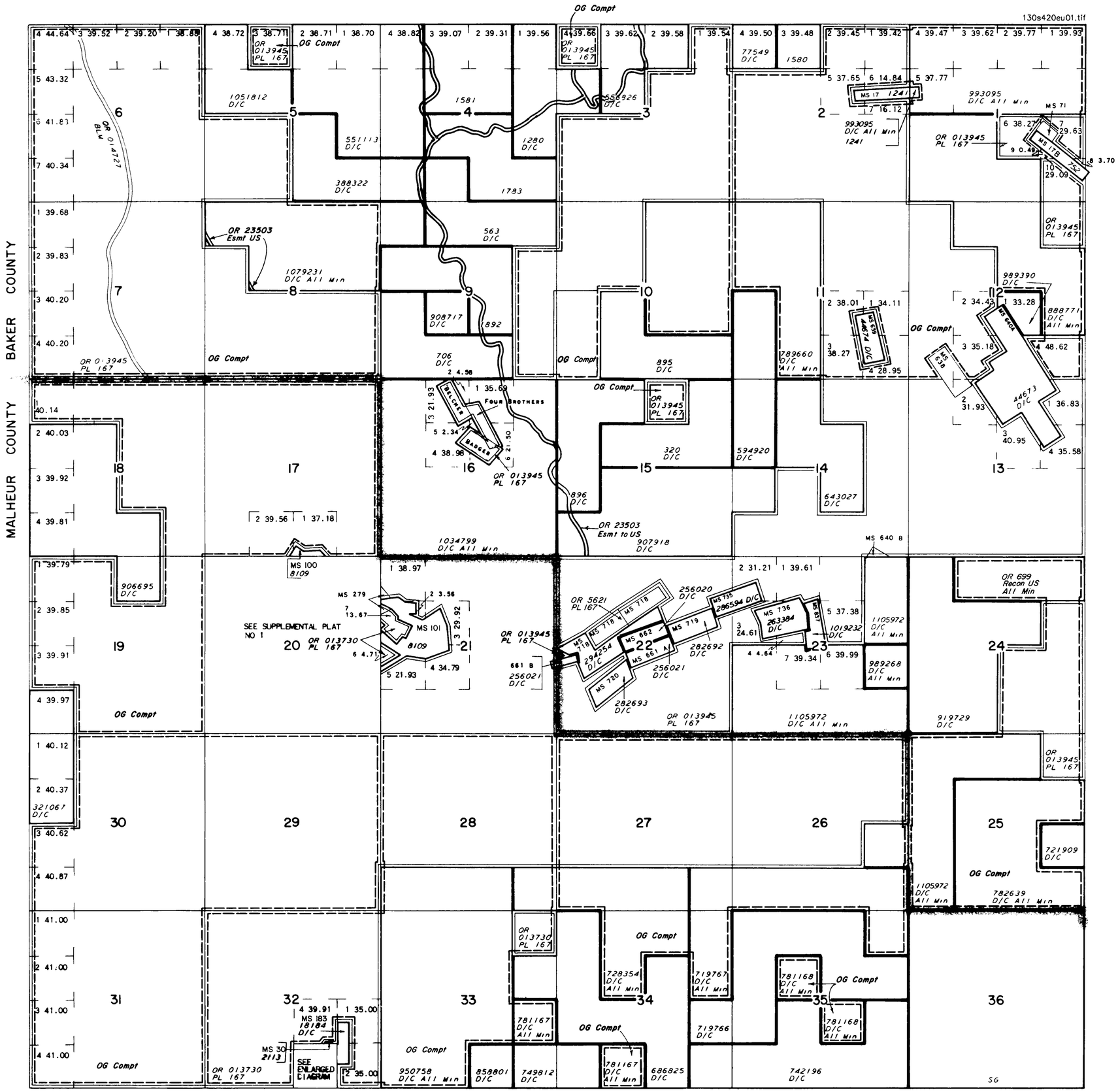

STATUS OF PUBLIC DOMAIN LAND AND MINERAL TITLES

MT/USE PLAT

INDEX TO SEGREGATED TRACTS				
RESURVEY	ORIGINAL SURVEY			
TRACT NO	T	R	SEC	SUBDIVISION

FOR ORDERS AFFECTING DISPOSAL OR USE OF UNIDENTIFIED LANDS WITHDRAWN FOR CLASSIFICATION, MINERAL, WATER AND/OR OTHER PUBLIC PURPOSES, REFER TO INDEX OF MISCELLANEOUS DOCUMENTS.

OR 013730 Det PL 167 (Act of Cong 07/23/1955) completed 03/13/1964, all PD surface mgmt by BLM

OR 013945 Det PL 167 (Act of Cong 07/23/1955) completed 04/27/1964, all PD surface mgmt by BLM

OR 5621 Det PL 167 (Act of Cong 07/23/1955) completed 06/25/1970, all PD surface mgmt by BLM

OR 53975 SRHA NOITL MC 09/23/1997
Sec 6: W½NE¼SW¼ E½NW¼SW¼

OR 53968 SRHA NOITL MC 10/01/1997
Sec 8: NW¼NW¼ E½NW¼
Sec 9: NW¼NW¼
Sec 16: All excl 41.33 Ac in Tax Lot 1700

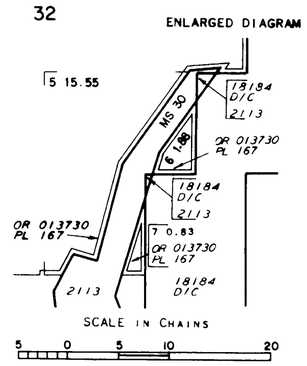

FILE REF: 130s420eu01.tif	ACAD Map2000/GTX RasterCAD 6.0
CONVERT JPEG: 02/24/2000	BY: H. GISCH
LAST UPDATE: 08/23/2006	BY: D. LEAVENWORTH
POSTED TO PUBLIC RECORDS: 09/01/2006	
SURVEYED TOWNSHIP	
SURVEYED COORDINATE SOURCE:	
GCDB NAD 83 CURRENT TO:	N/A
IMAGE SOURCE:	SCANNED ORIGINAL MTP
PROJECTION:	N/A
COORDINATE ELEVATION:	N/A
SOURCE FOR METES & BOUNDS:	N/A
NOTES:	
USE PLAT: Lsbl Min	

T. 13 S.
R. 42 E.

SCALE in Chains
10 5 0 10 20 30 40 60 80
660 0 660 2640 5960 5280
SCALE in Feet

WARNING STATEMENT

This plat is the Bureau's Record of Title, and should be used only as a graphic display of the township survey data. Records hereon do not reflect title changes which may have been affected by lateral movements of rivers or other bodies of water. Refer to the cadastral surveys for official survey information.