Idaho BLM
Technical Bulletin 89-4

Wildlife Watering and Escape Ramps on Livestock Water Developments: Suggestions and Recommendations

(Update of BLM Technical Note 305)

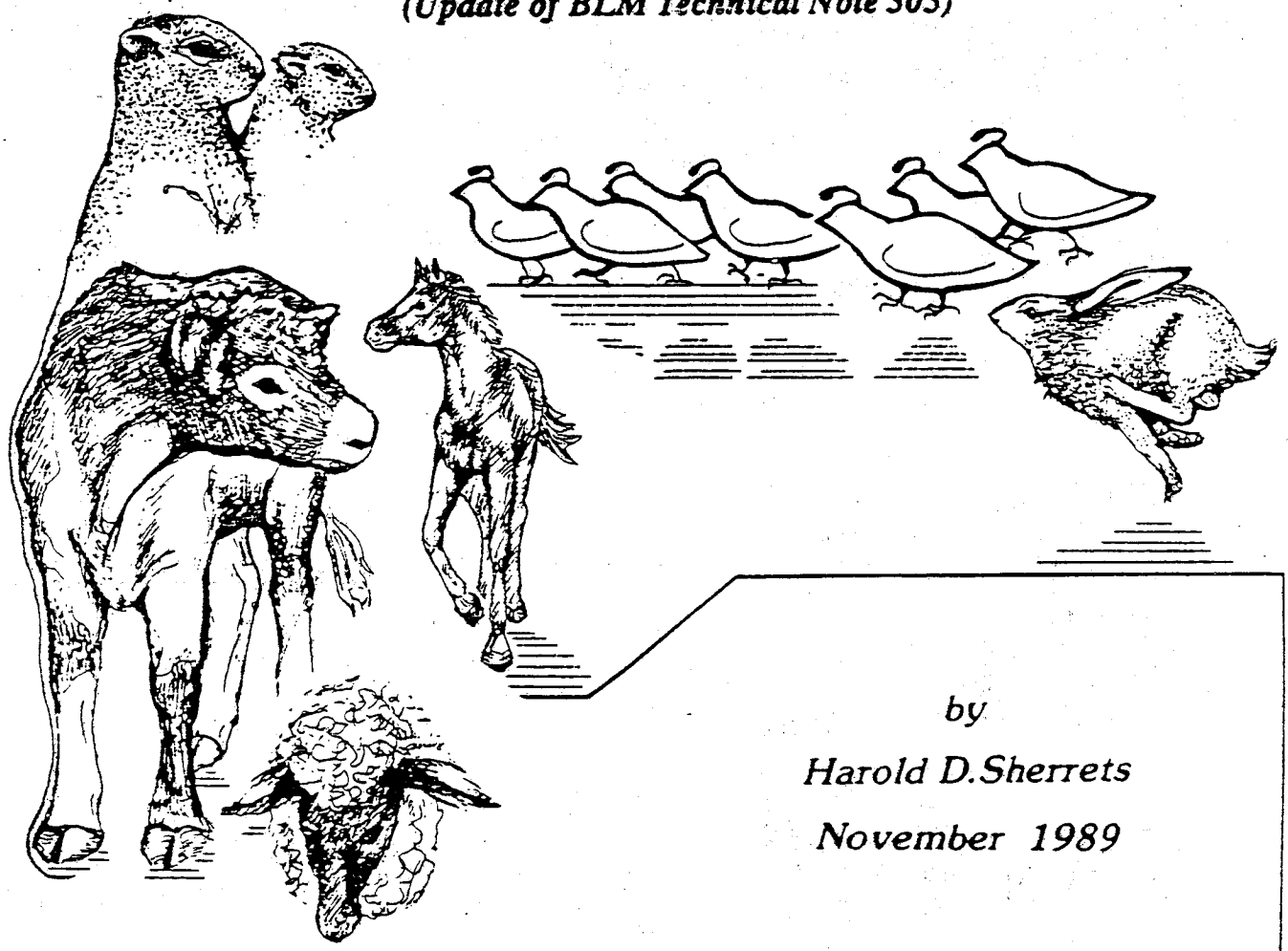

by

Harold D. Sherrets

November 1989

U.S. DEPARTMENT OF THE INTERIOR
Bureau of Land Management
Idaho State Office
3380 Americana Terrace
Boise, Idaho 83706

Table of Contents

	Page
Introduction	1
General Guidelines	1
Livestock Trough Modifications	1
Open Storage Tank Modifications	3
Illustrations	4
References	30

Idaho BLM
Technical Bulletin 89-4

Wildlife Watering and Escape Ramps on Livestock Water Developments: Suggestions and Recommendations

(Update of BLM Technical Note 305)

by Harold D. Sherrets

U.S. DEPARTMENT OF THE INTERIOR
Bureau of Land Management
Idaho State Office
3380 Americana Terrace
Boise, Idaho 83706

May 1989

Introduction

September 1977, Lanny Wilson wrote Technical Note 305 entitled *Guidelines and Recommendations for Design and Modification of Livestock Watering Developments to Facilitate Safe Use by Wildlife.* This Technical Note has been the Bureau's guide for identifying wildlife escape ramps. There have been some additional livestock and wildlife water systems developed since 1977. Thus it appears timely that Technical Note 305 be updated to reflect current information. This Technical Bulletin has been updated with the assistance of many people and information from many sources. Unfortunately we are not able to acknowledge everyone's contribution other than giving them our sincere thanks.

The need for wildlife escape ramps (bird ladders) continues today as it has in the past. Some water troughs have been placed by cooperators that do not lend themselves to use of a standard type escape ramp. Thus when these types of troughs are placed on public land, they must have suitable escape ramps provided.

General Guidelines

Livestock waterers have historically been developed to permit livestock access to a water source. Many of these would not be available for livestock if they had not been collected in a container, especially during dryer periods of the year. The situation still exists today. However, many new water developments are from wells or water diversions where water is piped to areas having no previous dependable water source. In many instances, livestock use in the past was only in the spring, fall, or winter. Today, those ranges can be used during the summer by livestock because of seedings and water development. Wildlife in the past made do with the available water or traveled further for water than livestock. In some instances, livestock waterers have enabled more wildlife to use an area because of dependable water.

If all available water is captured and the only water outlet source is a trough, wildlife water should be provided through an alternative water outlet. If sufficient water is available, an overflow outlet a little distance from the livestock trough will normally meet wildlife needs. It is best to fence overflow areas so livestock do not trample the outlets.

In situations where wildlife water is to be available season long (as a mitigating measure to provide livestock water in an area not previously having water), the primary beneficiaries of the livestock water should agree to provide wildlife waters during times livestock is not present (except for winter months).

New types of troughs proposed for placement on public land must have an escape devise designed and installed that will enable small wildlife to escape from the trough. The design must be such that wildlife will be intercepted as they swim around the outside edge of the trough and not get trapped behind the ramp or miss the ramp entirely.

Livestock Trough Modifications

Immature wild ungulates (fawn deer, bighorn sheep lambs, calf elk, antelope kids, etc.) cannot utilize watering facilities that exceed 20 inches above ground level (Illustration 1). *Wherever ground-level wildlife drinking facilities are not provided in association with other water developments, the height of*

livestock troughs or other containers must not exceed 20 inches. Larger troughs may be set below ground level to reach the desired height (Illustration 2).

Often cattle, domestic sheep, wild horses, and other large ungulates will push, crowd, or fight adjacent to a water facility. With the lip of the trough 20 inches above ground level there is the possibility of some ungulates (e.g., domestic sheep, calves, fawn deer, antelope, etc.) falling into the trough. If the water level exceeds 20 inches, the animal may not be able to reach the bottom and stand.

Consider installing safety barricades in all livestock watering developments to prevent accidental entry and possible drowning (Illustrations 3a and 3b). The horizontal distance from the rim of the trough to the barricade also must not exceed 20 inches (Illustration 2).

In addition, escape from a trough by a large ungulate may be more difficult than an accidental entry. *Consider installation of concrete blocks and/or rocks to form escape ramps in all livestock water facilities where water depth exceeds 20 inches* (Illustrations 2, 16, 23, and 25).

If the quantity of water is insufficient to provide separate livestock and wildlife developments, the livestock facility must serve a dual role. This can be accomplished by constructing wildlife ladders which lead into water facilities (Illustrations 4, 5, 6, and 22). *These ladders can be constructed of expanded metal or rebar and hardware cloth and should be protected by posts or protective fencing.*

An alternative method of providing access by small animals to raised troughs is to construct concrete or rock ramps topped with concrete (Illustration 7). Advantages of such ramps include minimal maintenance and decreased chance of injury to livestock. Protective fencing would be optional if concrete/rock ramps are used.

Perhaps the most important open trough modifications to small wildlife are escape ramps or ladders installed inside the troughs. *Illustrations 9, 10, 11, 12, 13, 14, 16, 17, 18, 19, 23, 24, and 25 show the recommended wildlife escape ladder construction for most types of livestock troughs.* Dimensions can be changed accordingly, but the following general design guidelines should be followed.

Birds, lizards, rodents, rabbits, and other small animals generally swim the circumference of a tank trying to find their way out. Therefore, *wildlife escape ladders must be constructed and installed to intercept the line of travel around the edge of the tank* (Illustrations 10, 11, 19, and 24). Improper screening may result in animals being trapped and drowned (Illustration 12).

All wildlife escape ladders should be attached to the watering facility by a hinge or bracket to facilitate trough and ladder cleaning and to reduce the possibility of the ladder being removed (Illustration 9, 13, and 18). Brackets have proven to be more effective than hinges. If not installed properly, hinges tend to bind and will break with prolonged use.

Wildlife escape ladders should have a minimum slope of 30 degrees and a maximum of 45 degrees (Illustrations 8, 9, 12, 13, 16, 17, and 18). The more gradual the slope of an escape ladder the more effective it will be.

A minimum of one escape ladder per 30 linear feet of trough perimeter should be installed (Illustrations 10 and 11). Information suggests that many small animals become exhausted and drown if forced to swim more than 30 feet. Where troughs are connected in a series (such as 3-10ft. troughs), each trough must have escape ladders.

It is possible to make wildlife escape ramps or ladders serve purposes other than wildlife protection. In water facilities where float valves are installed, the escape ramp may provide a protective cover for the valve, as well as a landing from which animals can drink and a method by which trapped animals can escape (Illustrations 13, 18, 23, and 25).

A new water trough being used is made from large earth moving equipment tires. The size of these tires may vary considerably. No one type of escape ladder or ramp has been developed for tire type troughs that has proven totally effective. Bears will utilize tire troughs. In using the troughs they knock all pipes and obstructions from the tire. Thus, any ramp used in

tire troughs should be resilient and/or easily replaceable. See Illustrations 16 and 17 for various ladders that may be suitable for tire troughs where bears are not a problem.

Open Storage Tank Modifications

In many grazing areas large open water storage tanks are used. The majority are out of reach of livestock, big game animals, and most small wildlife species (except birds and bats). The livestock trough modifications described in the previous section are impractical, and usually unnecessary in storage tanks. Some provision to allow trapped birds to escape the deep water is needed.

A floating wildlife platform should be installed in all large open water storage tanks (Illustrations 14, 15, and 20). Such a platform will allow birds to escape or to drink.

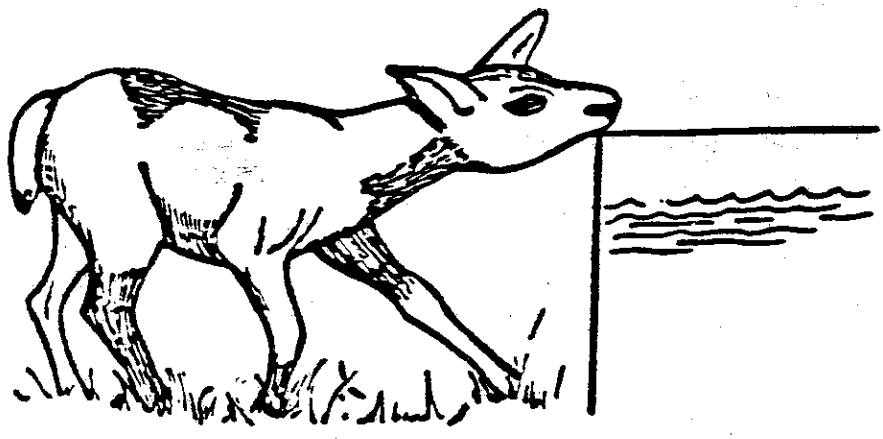

Trough height above 20 in. water not available.

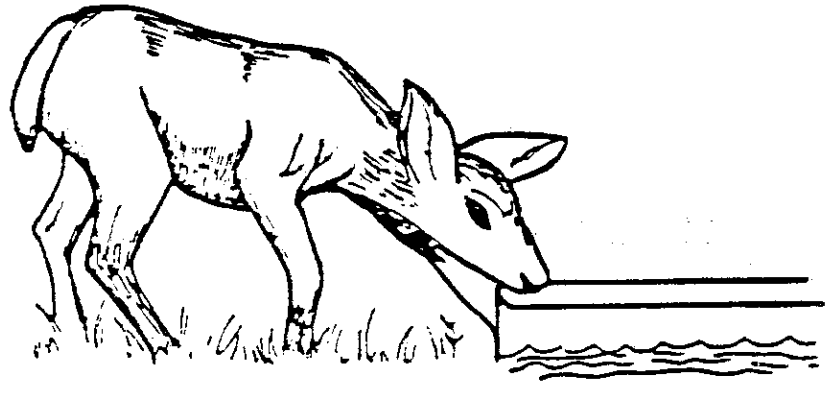

Trough height 20 in. or less water is available.

ILLUSTRATION 1: These two drawings illustrate the need for trough height not to exceed 20 inches above ground level.

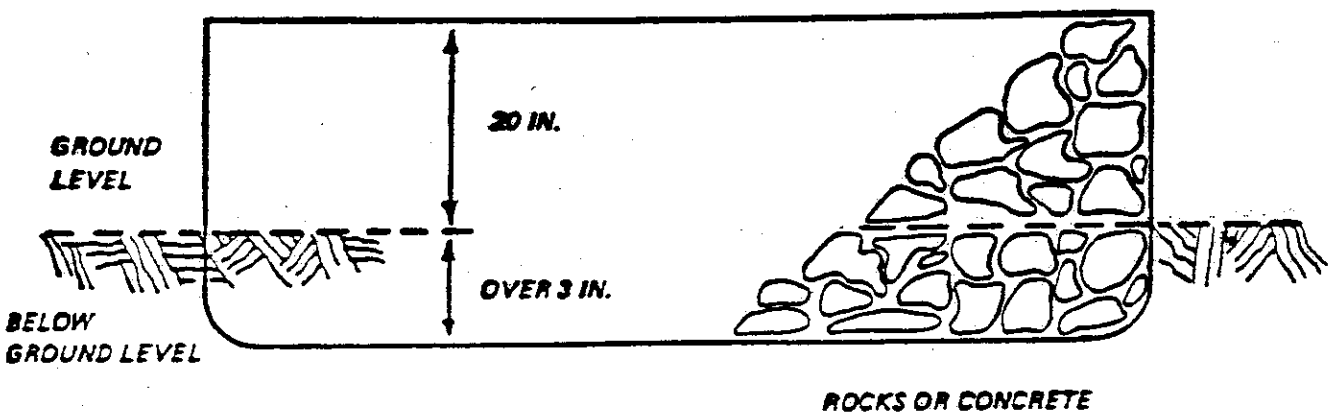

SIDE VIEW

ILLUSTRATION 2: Placing of rocks, concrete blocks or other ramp facilities provide an escape route for large ungulates, where the water depth exceeds 20 inches.

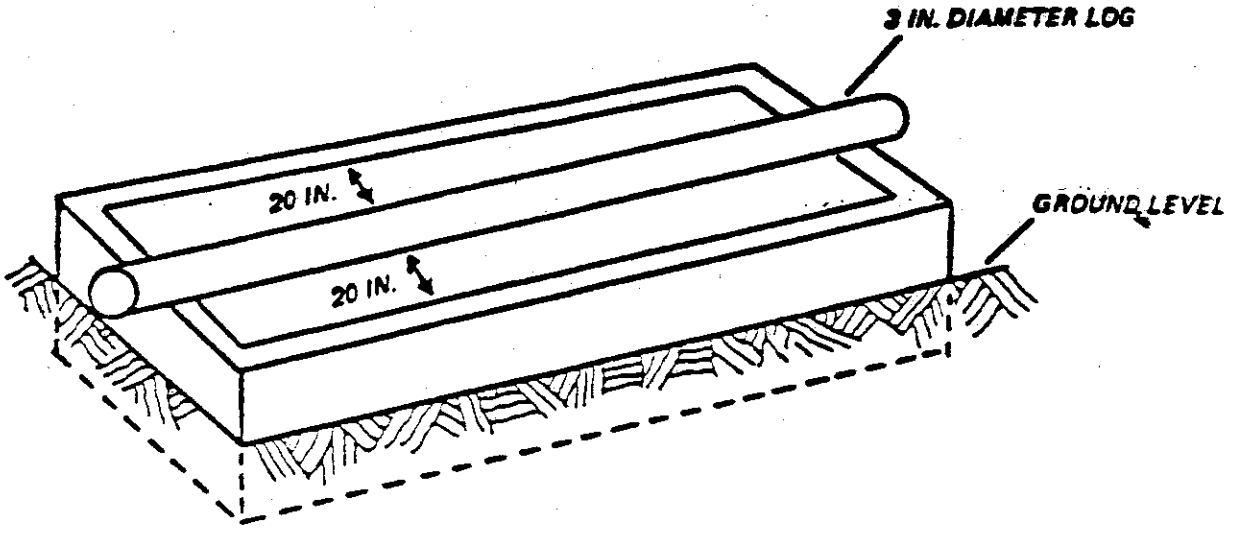

ILLUSTRATION 3 a: Possible barricade developments depending on livestock trough configuration.

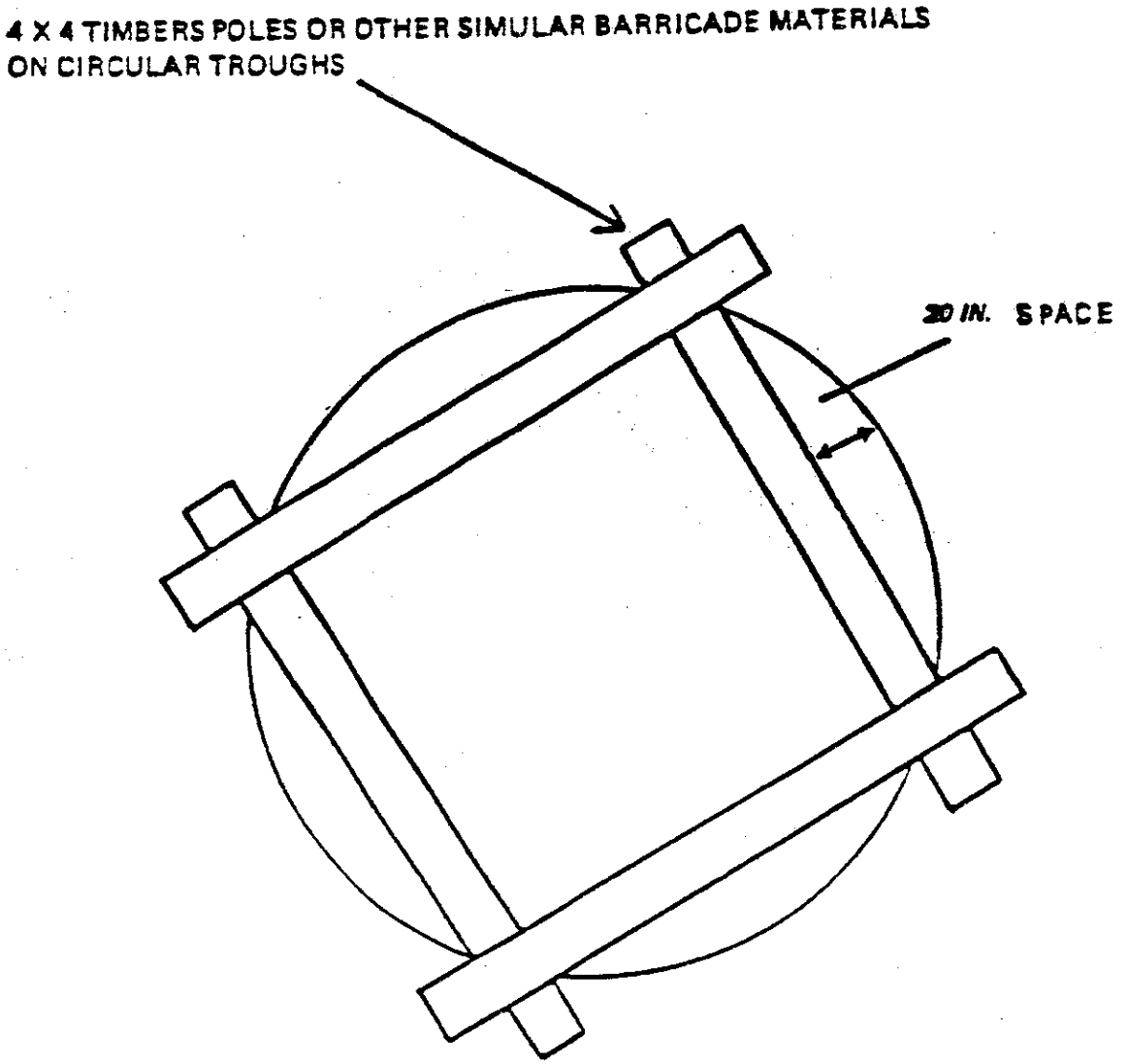

TOP VIEW

ILLUSTRATION 3b: Possible barricade developments depending on livestock trough configuration.

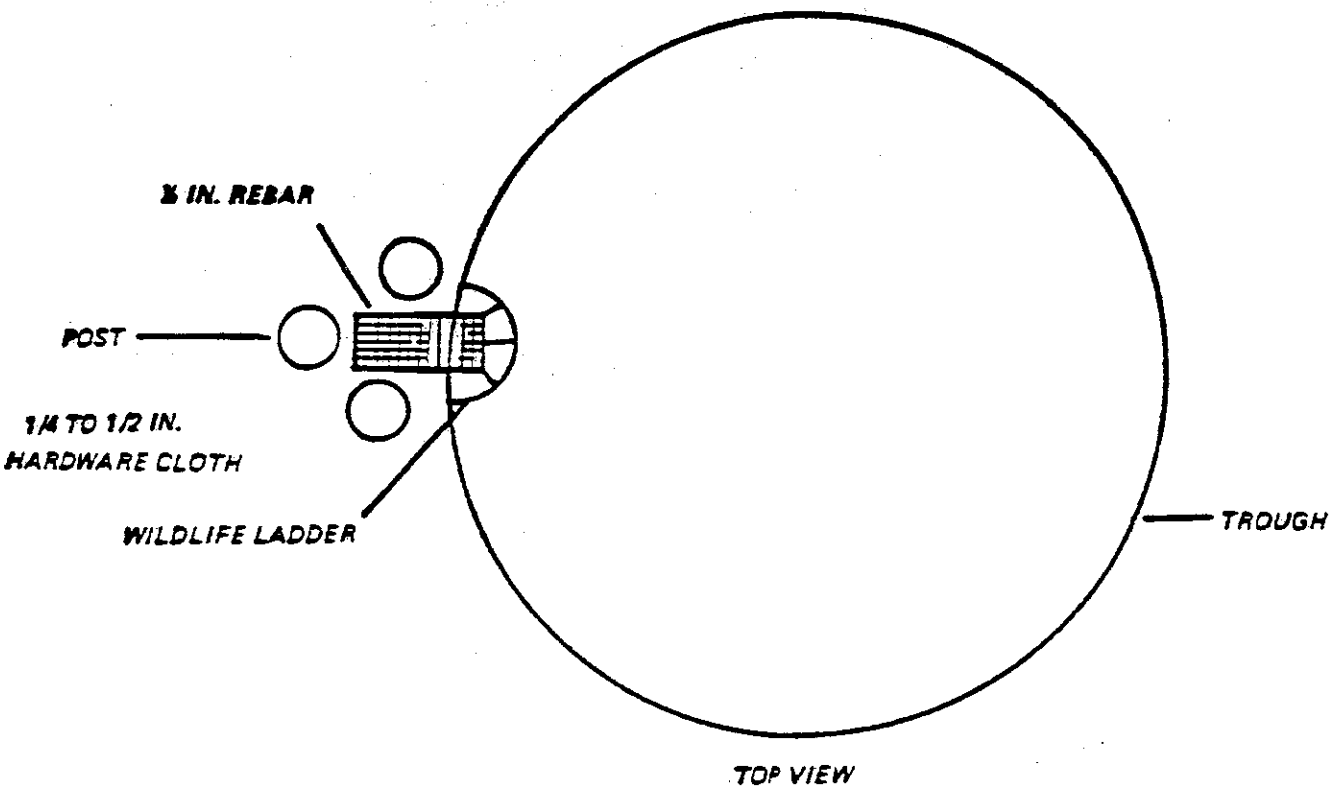

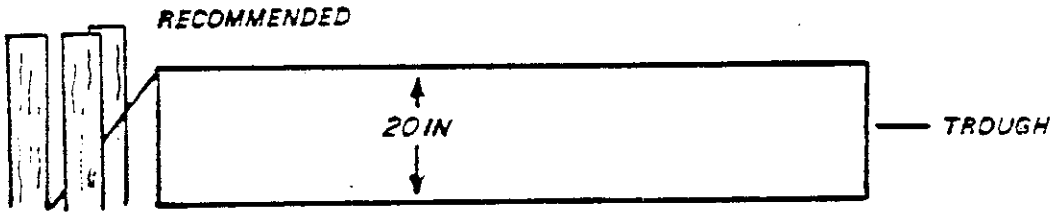

ILLUSTRATION 4: Post around wildlife ladders leading into a livestock trough will reduce chances of damage to the ladder and injuries to large ungulates.

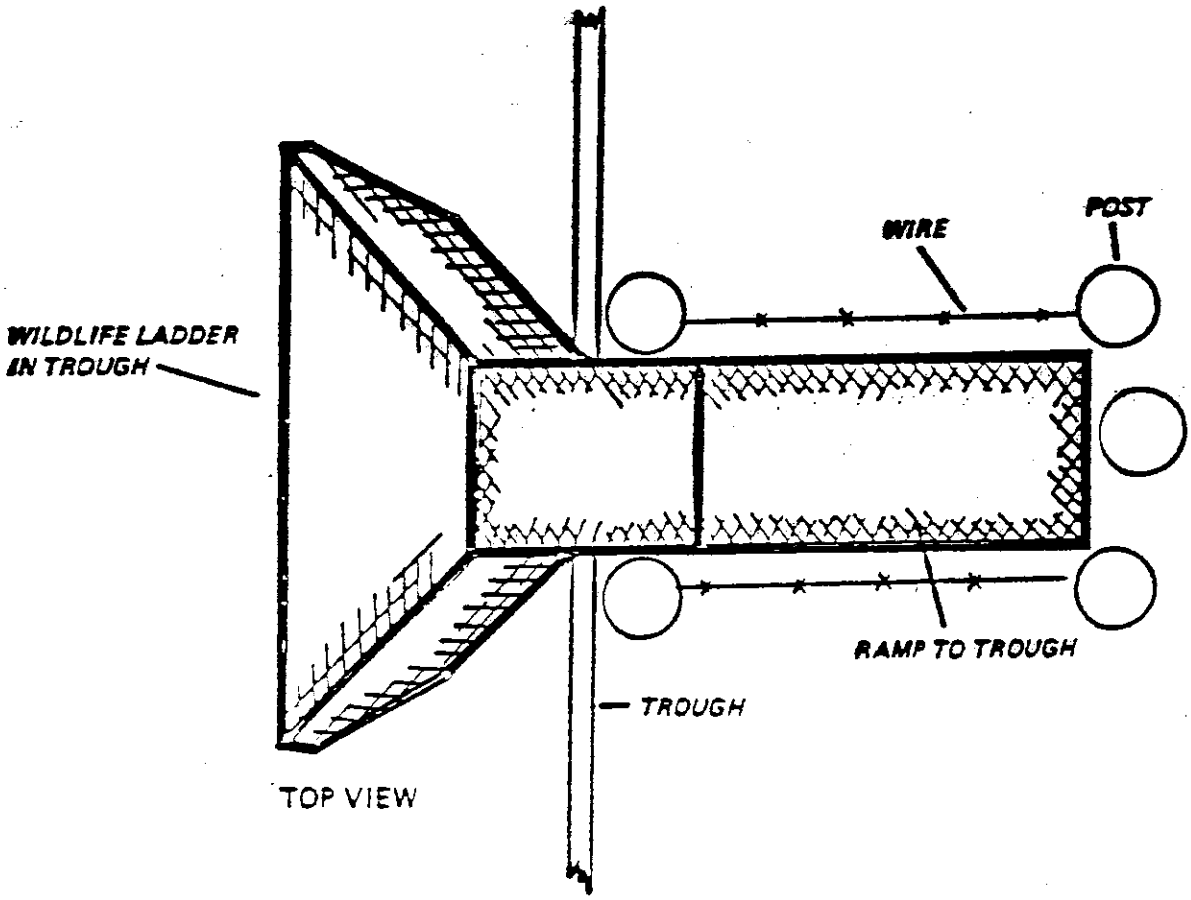

ILLUSTRATION 5: Fencing and post arrangement to protect wildlife ramp leading into a livestock watering facility.

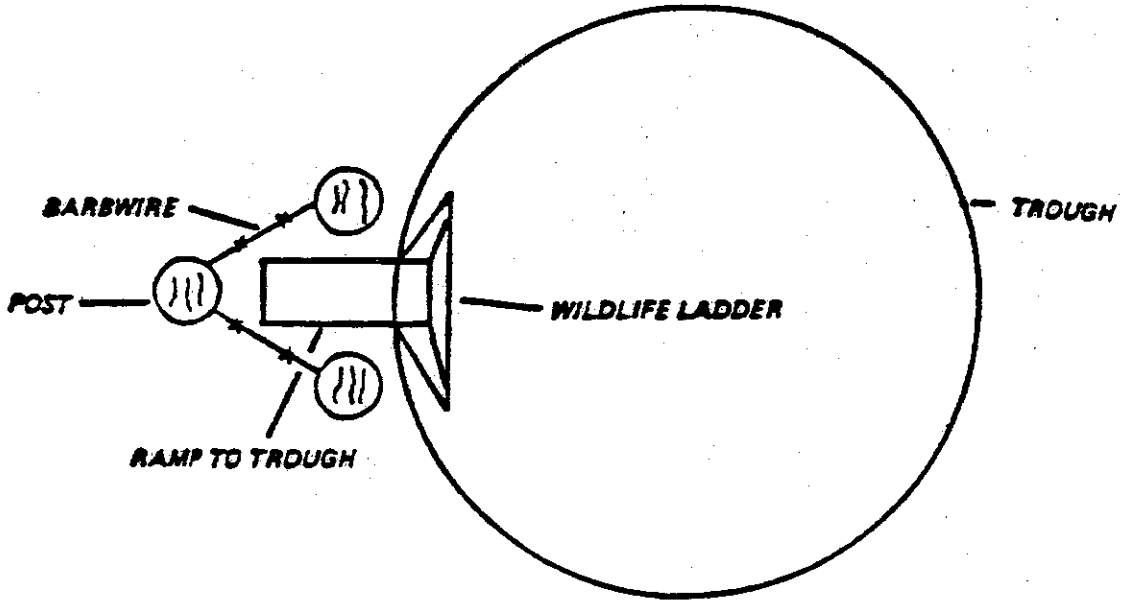

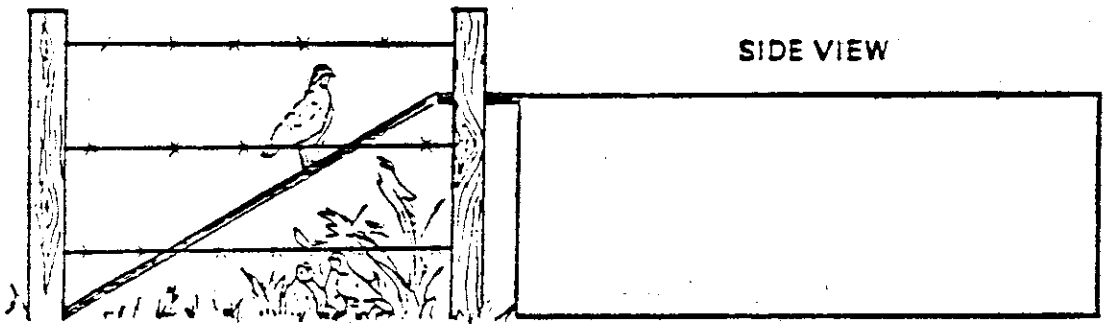

ILLUSTRATION 6: Protective fencing of wildlife ladders leading into livestock water facility will result in the establishment of protective cover for wildlife.

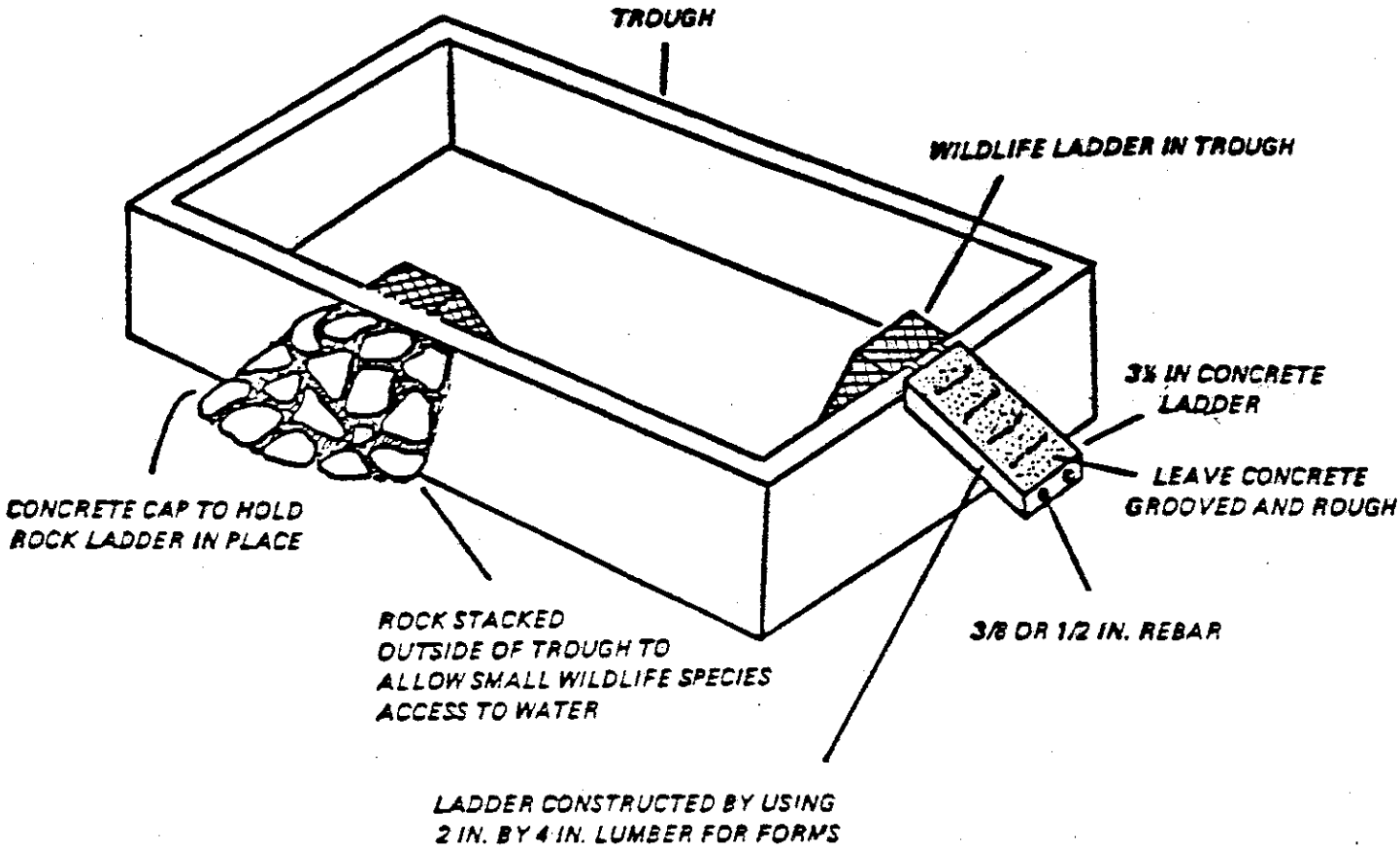

ILLUSTRATION 7: Concrete ramps or rock ramps capped by concrete into livestock trough can withstand trampling by large ungulates and protective fencing is optional.

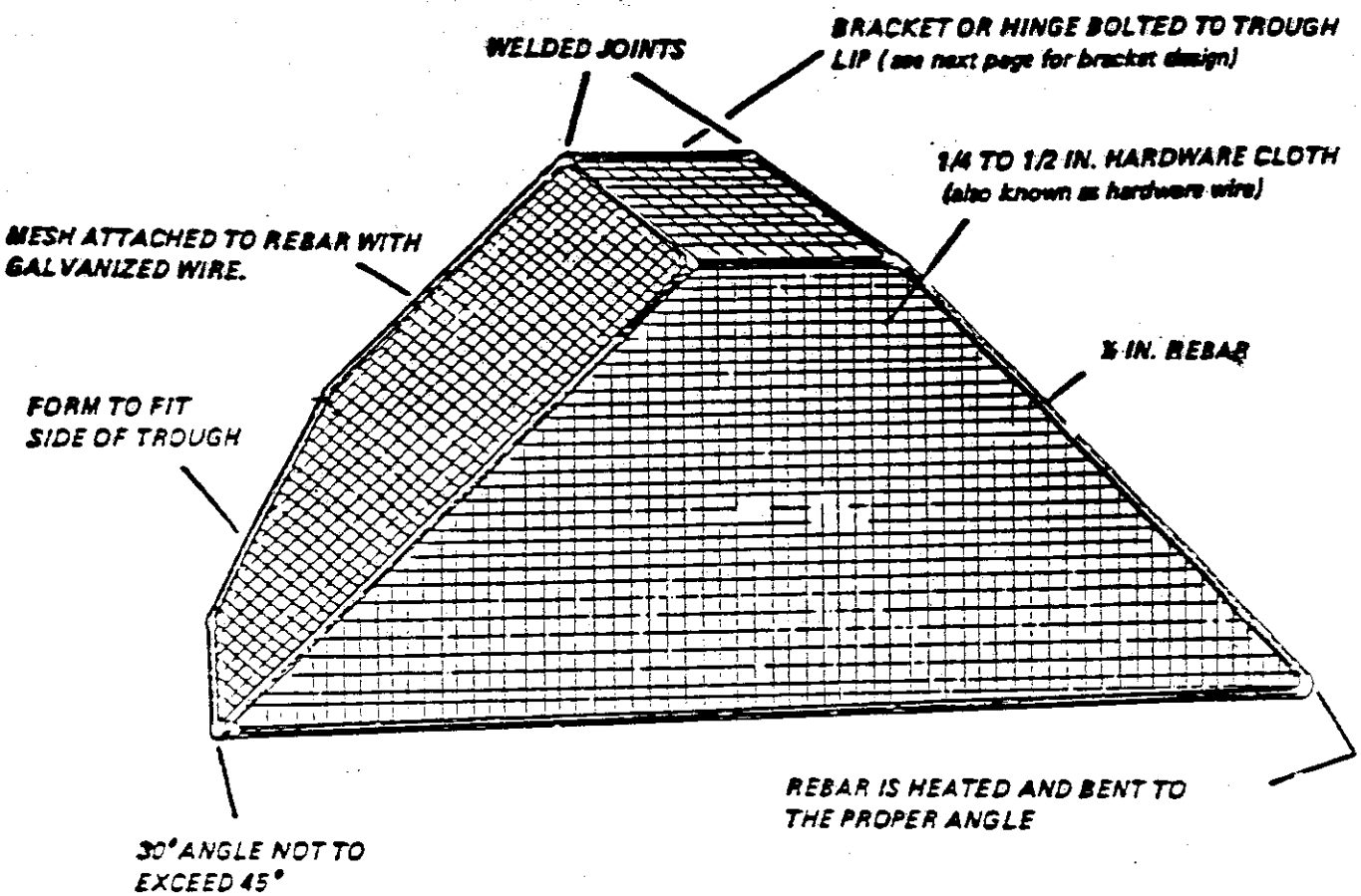

ILLUSTRATION 8: Triangular shaped wildlife ladder recommended rectangular and concave bottom trough.

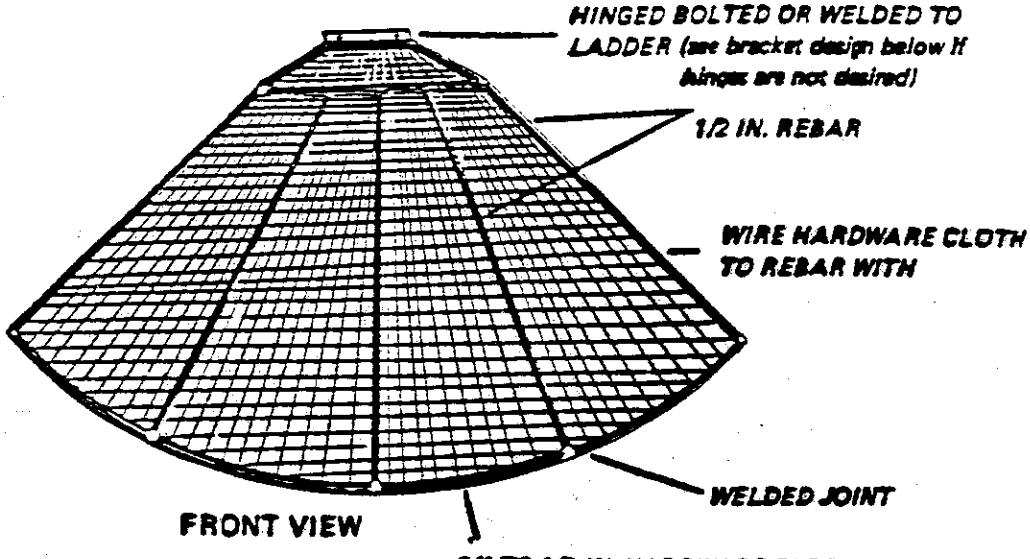

FRONT VIEW

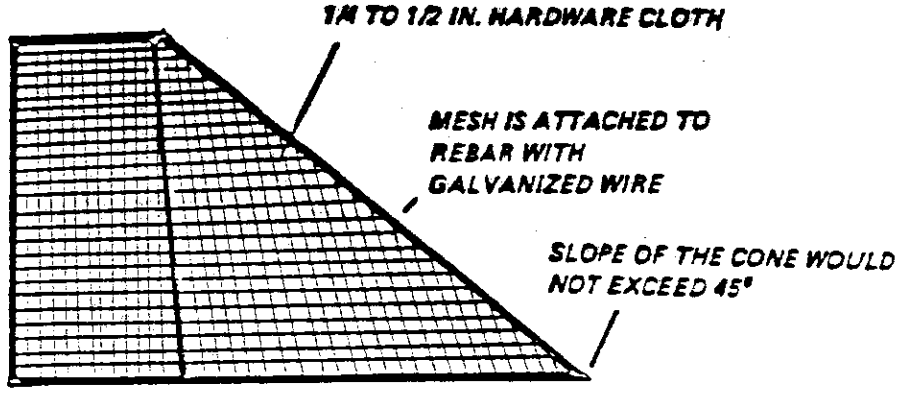

SIDE VIEW

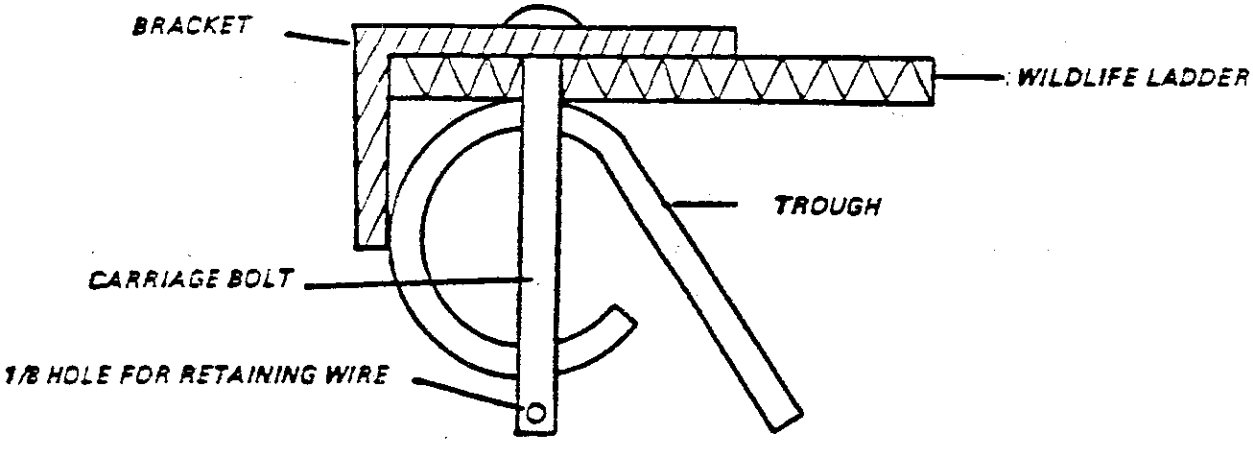

ILLUSTRATION 9: Cone shaped wildlife ladders are recommended for circular troughs.