# FIRST ORDER L.H. FOR PIEDRAS BLANCAS, CAL.



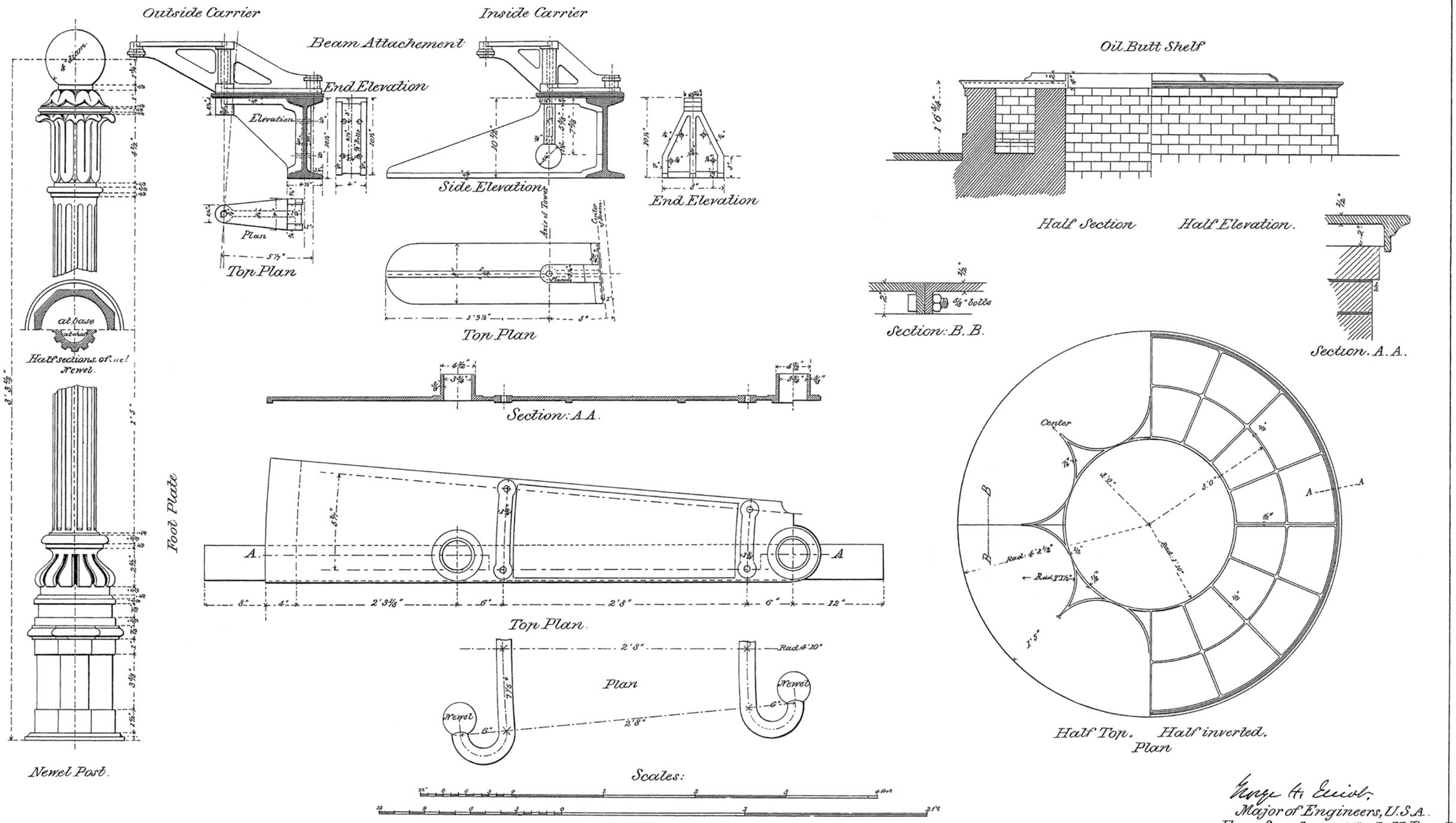


Geo. H. Elliot,
Major of Engineers, U.S.A.
Engr. Secretary of the L.H. Board

Office of the L.H. Board.

Paul J. Pelz, Chief Draughtsman