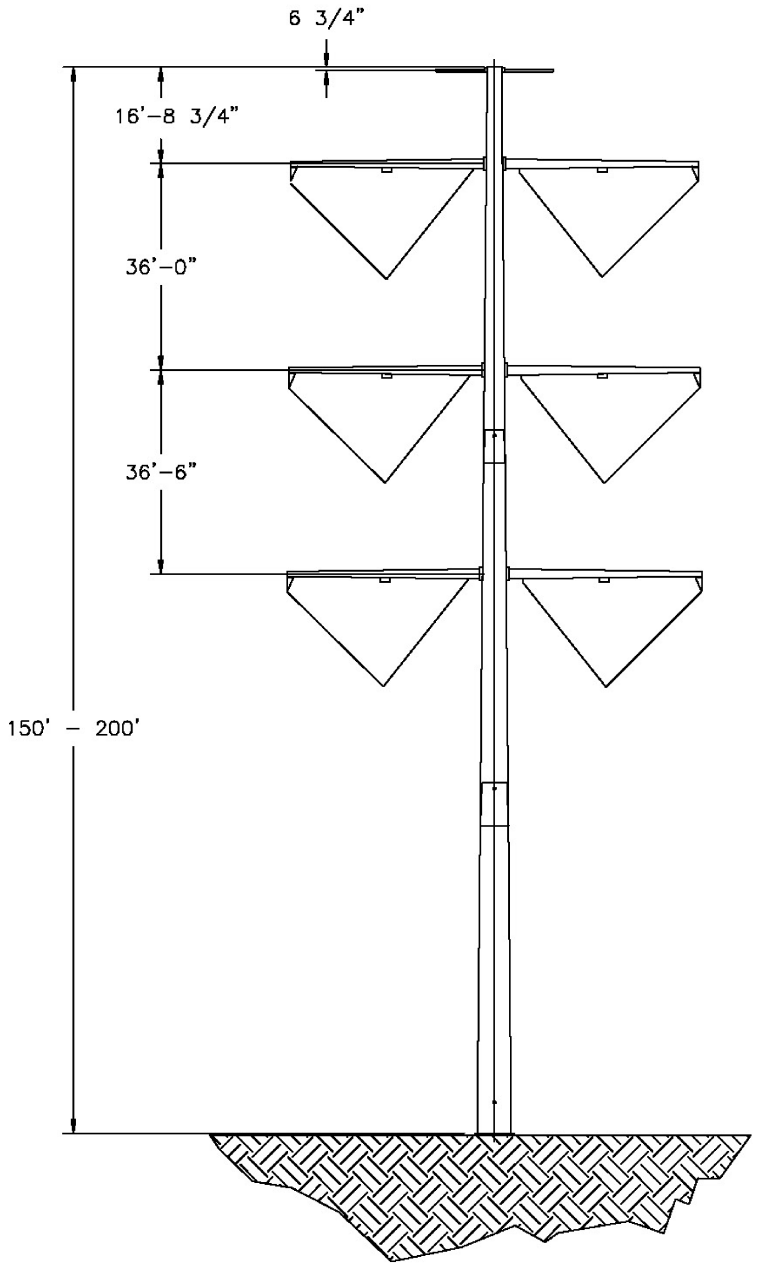

APPROVAL		
	BY	DATE
DRAWN	RLG	06/22/06
DESIGNED	SRP	06/22/06
CHECKED		
APPROVED		

Nevada Power.
TRANSMISSION ENGINEERING STANDARDS

SUNRISE TAP TRANSMISSION LINE PROJECT

FIGURE 2.4-2

Typical Double Circuit 500kV Single Pole Structure

SHEET: 0

U:\NPC\TD\VOL1\TRANSCOM\PROJECTS\CENTENNIAL\HAMD\CTD\6 FRAMING DETAILS\LATTICE EXAMPLES\TYPNPC-DC500KV TUBULARSTR.DWG

PLOT DATE/TIME: 9/28/2006 8:58 AM PLOTTED BY: PAYNE, STEVEN

Thursday, August 7, 2008 9:24:21 AM
W:\NevadaPower\Apps\SRT\EA_FIG_REVISIONS_080508\Fig2-4-2_500kV_Tube_080708.mxd