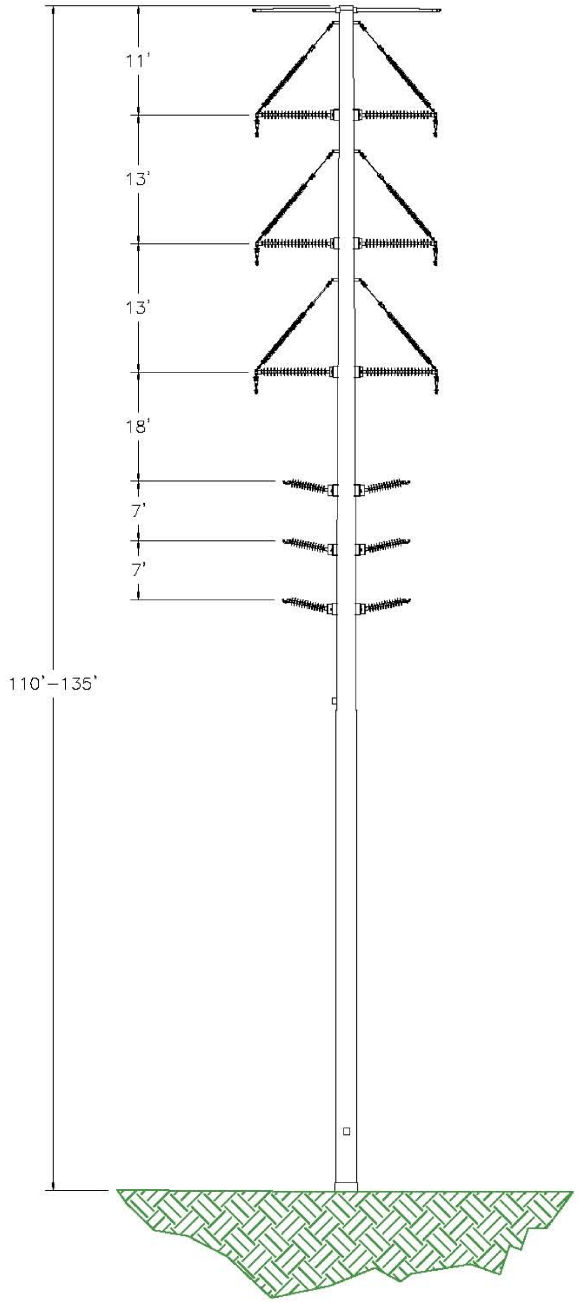

APPROVAL		
	BY	DATE
DRAWN	RLG	04/20/06
DESIGNED	SRP	04/20/06
CHECKED		
APPROVED		

Nevada Power.
TRANSMISSION ENGINEERING STANDARDS

SUNRISE TAP TRANSMISSION LINE PROJECT

FIGURE 2.4-3

Typical Quad-Circuit 230kV Single Pole Structure

SHEET:

0

PLOT DATE/TIME: 4/21/2006 12:13 PM PLOTTED BY: GARDNER, RUSS

U:\NPC\TD\VOL1\TRANSCOM\PROJECTS\CENTENNIAL\HAMD\CTO\6 FRAMING DETAILS\LATTICE EXAMPLES\TYPNPC-DC230KV-138KVQUAD.DWG

Wednesday, August 6, 2008 4:55:10 PM
W:\NevadaPower\Apps\SRT\EA_FIG_REVISIONS_080508\Fig2-4-3_230KV_Tube_080608.mxd