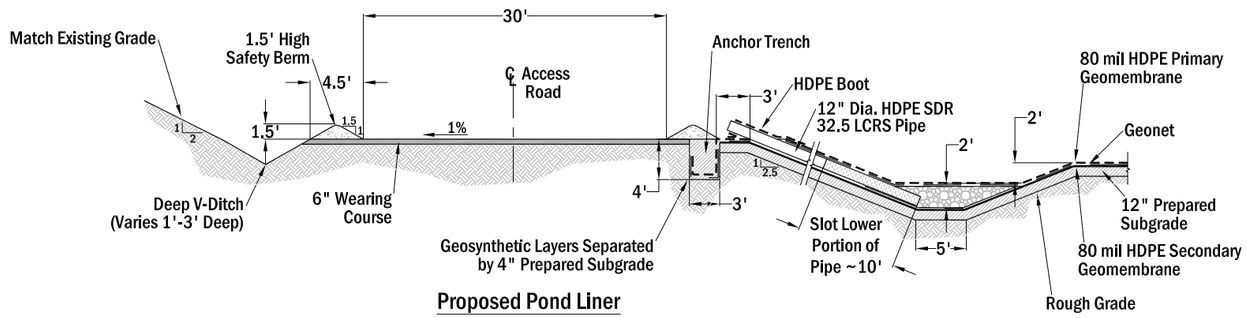

Proposed Pond Liner

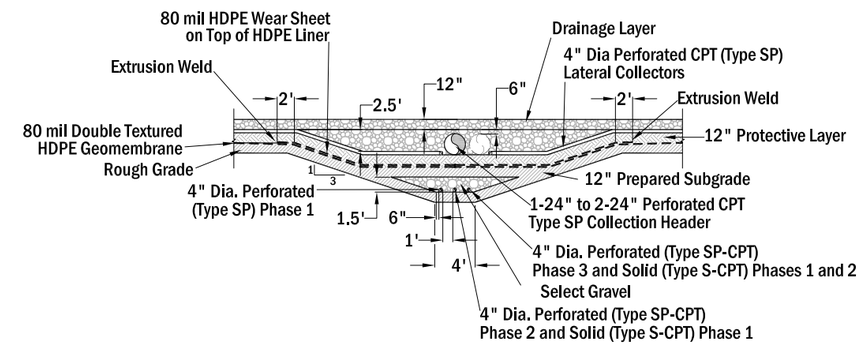

Internal Solution Channels

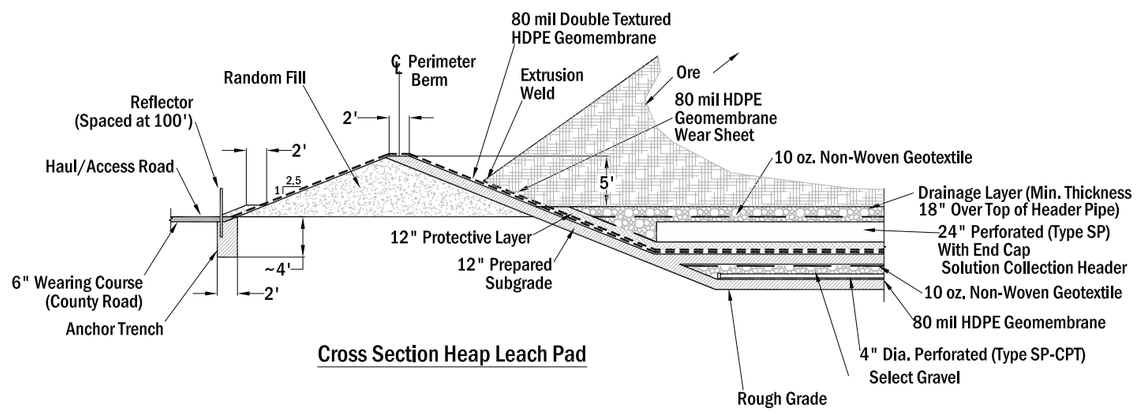

Cross Section Heap Leach Pad

H:\13803 Newmont Emigrant Project\5000_GIS\cadpro\Draft_EIS_Figs\leachxsec.dwg

0 Feet 15

U.S. Department of the Interior
Bureau of Land Management
Elko District Office
Elko, Nevada

Proposed Leach Pad and Process Liner Systems
Emigrant Project
Elko County, Nevada
FIGURE 2-9