OUR CULTURAL HERITAGE

A FRAGILE RECORD OF THE LAST 12,000 YEARS
ALONG THE LOWER SALMON RIVER

U.S. DEPARTMENT OF THE INTERIOR
BUREAU OF LAND MANAGEMENT

MISSION STATEMENT

The Bureau of Land Management (BLM) is responsible for the stewardship of our public lands. It is the mission of the BLM to sustain the health, diversity and productivity of the public land for the use and enjoyment of present and future generations. The BLM bases its management on the principles of multiple use and sustained yield of our nation's resources within a framework of environmental responsibility and scientific technology. These resources include recreation; rangelands; timber; minerals; watershed; fish and wildlife; clean air and water; and scenic, scientific, and cultural values.

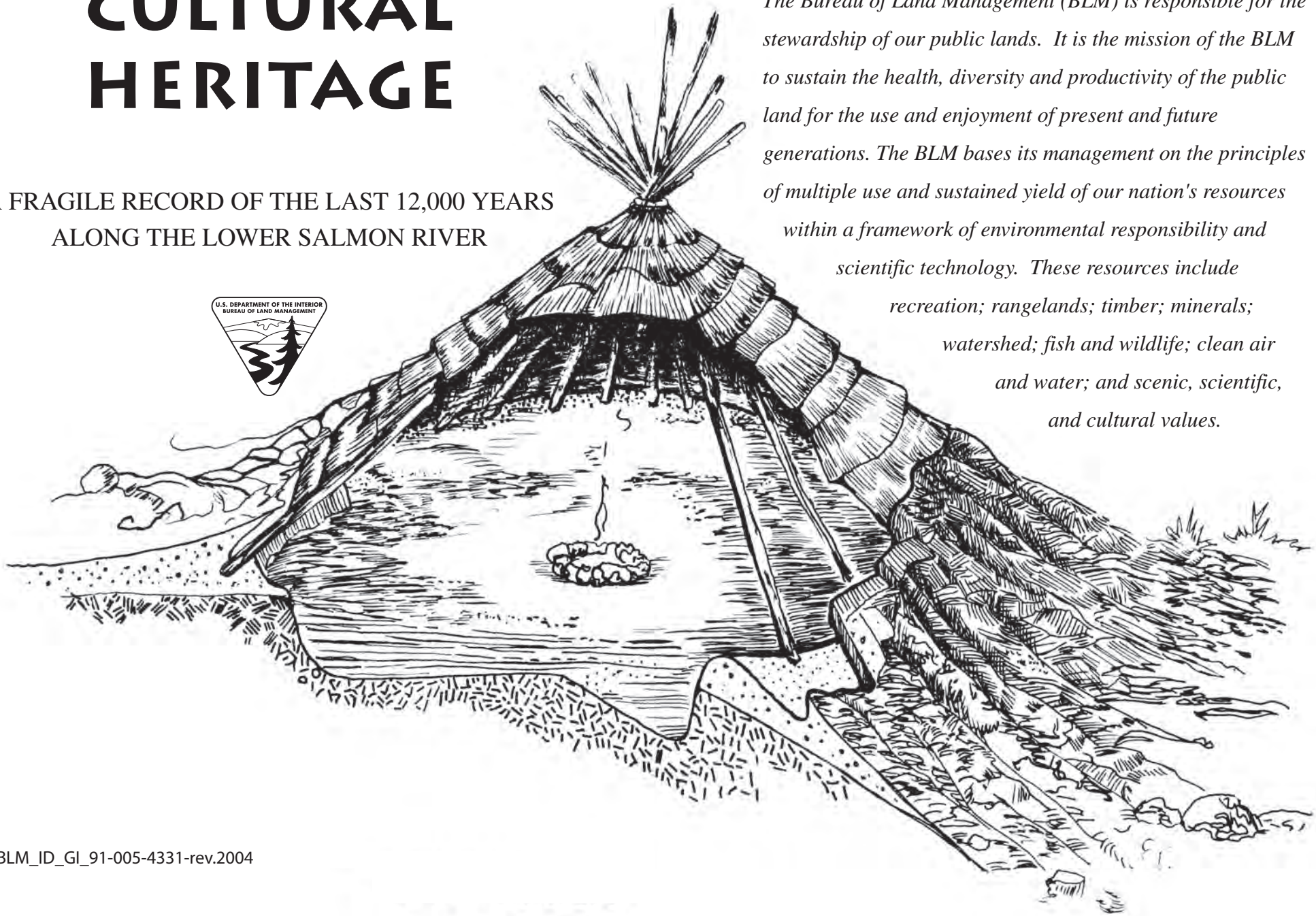

BLM_ID_GI_91-005-4331-rev.2004

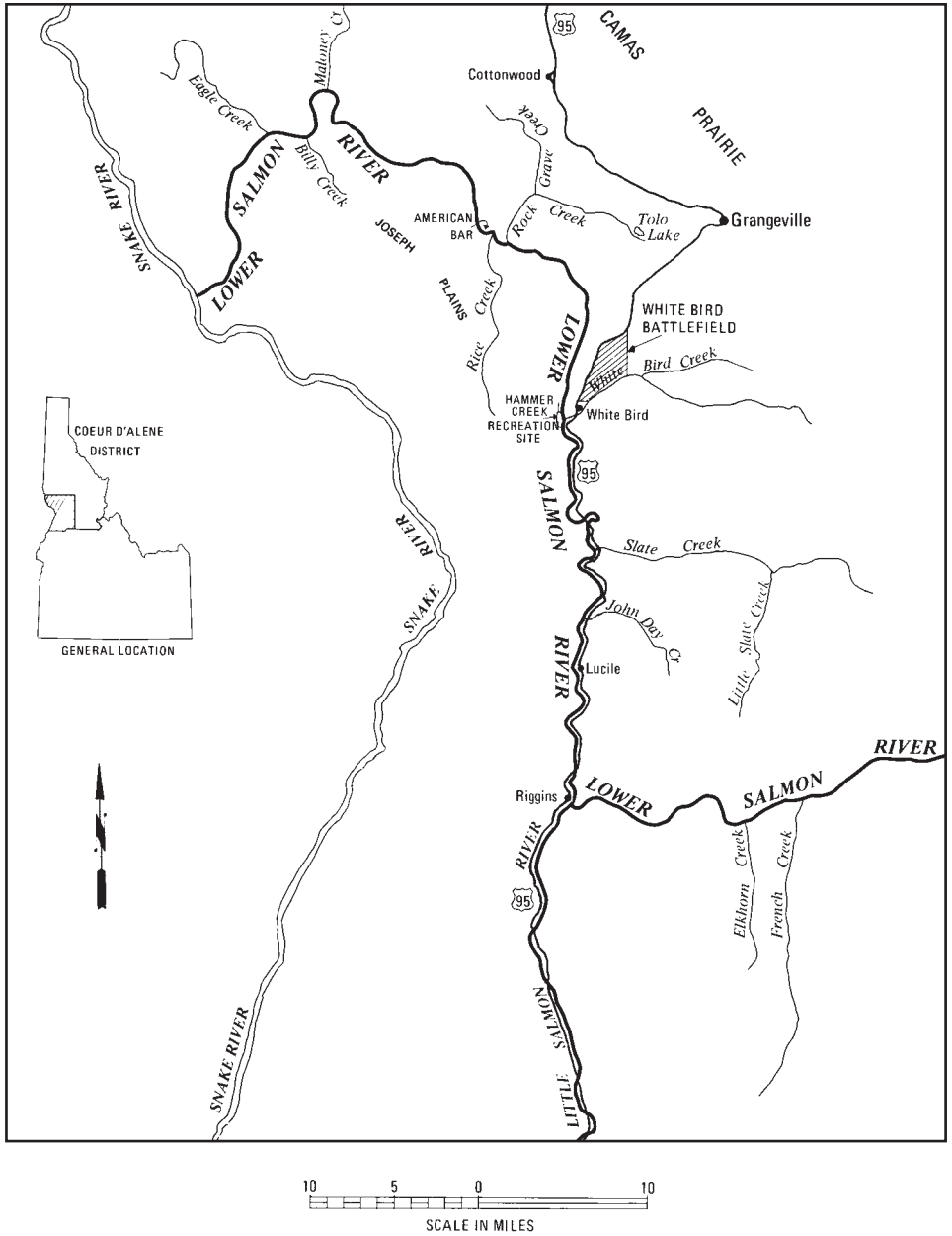

10 5 0 10
SCALE IN MILES

LOCATION MAP

OUR CULTURAL HERITAGE

A FRAGILE RECORD OF THE LAST 12,000 YEARS
ALONG THE LOWER SALMON RIVER

INTRODUCTION

As you visit the Lower Salmon River you are experiencing an environment which has been used by humans for the past 12,000 years. Through careful observation you may see the fragile evidence of 12,000 years of our history. In this booklet, some of the basic questions on the prehistory and history along the Lower Salmon River from French Creek to the confluence of the Salmon and Snake Rivers are addressed. This information should help make your activity along the river more rewarding.

Unfortunately, the evidence of the past can be easily damaged by current activities. Along the Lower Salmon River the degree of damage from various sources of deterioration is accelerating. Thus, public land users must be more aware of what the cultural resources represent, how irreplaceable these resources are, and what actions each person can take to ensure evidence of past human activity is not destroyed.

We hope your activities along the Lower Salmon River are enjoyable and that the people who preceded you left the environment in a condition suitable for your use, as we hope you leave it for those who follow you.

WHAT ARE CULTURAL RESOURCES?

Cultural resource is a term used to describe remains of past human activity or occupation. Along the Lower Salmon River the cultural resources are very diverse, representing 12,000 years of human activity. This long history of use has resulted in sites that include rock structures, mines, mining equipment, cans, bottles, glass, ceramics, nails, shovels, picks, ditches, reservoirs, trails, graves, pictographs, prehistoric housepits, and stone artifacts. Cultural resources also include those areas where significant human events occurred, even though evidence of the event no longer remains. Some cultural resources hold special religious or social significance for Native Americans and other groups.

WHY SHOULD WE BE CONCERNED ABOUT CULTURAL RESOURCES?

Cultural resources form a significant link between the past and the present. Discovering how and why humans have interacted with the cultural and physical environment in the past helps provide an understanding of our present situation, as well as provide insights to the future.

Although cultural resources are often very fragile and need to be protected, they can also be enjoyed. Once a site is destroyed, the information and enjoyment offered is lost forever. Sites must be managed so that those values making them significant are maintained. Collectively, they are a national treasure that belongs to us all.

Most visitors do not intentionally destroy sites, but the sheer volume of human traffic can severely damage some cultural resources. Another major source of impact is erosion created by seasonal high water of the Salmon River. Combined natural erosion and heavy visitor use can destroy or cause severe damage to some sites.

The cultural resources along the Lower Salmon River are very significant. These cultural resources are the only remaining examples of certain types of sites in the Pacific Northwest that are in Federal ownership and have not been damaged from dam construction or other land disturbing activities. Because of their importance, the Lower Salmon River Archeological District has been placed on the National Register of Historic Places (the formal listing of nationally significant cultural resources).

It is everyone's responsibility to protect these important sites. If we conserve cultural resources in the present, we can meet our obligations to the future by preserving the opportunity for future generations to enjoy and learn about our cultural heritage.

THE CULTURE HISTORY OF THE LOWER SALMON RIVER

By studying prehistoric (before written records) and historic (after written records) cultural resources, archeologists can develop a cultural chronology which documents changes in artifact styles (i.e. projectile point shapes or bottle manufacturing techniques) over time. From this a culture history can be formulated which attempts to describe specific changes in cultural systems. What follows is a brief description of the cultures that have developed and changed in this area. The cultural development along the Lower Salmon River was similar to the cultural development in northeastern Oregon, eastern Washington, and north-central Idaho.

The culture history is described by phases. A phase is composed of similar kinds of artifacts (usually based on their shape, kinds of raw material used, frequency of different kinds of artifacts, and manufacturing techniques) as well as associations with other archeological features. A change from one phase to another may indicate a changing adaptation by the same people to the environment, the borrowing of ideas from a neighboring group of people, or the arrival of a new group of people. Not enough research has been conducted in this region to determine exactly why these changes have occurred.

The table on page 5 summarizes the culture history of the area. In addition to the cultural information, an outline of past climatic changes which may have affected the culture history of this region is included.

YEARS AGO	CULTURE HISTORY	GENERAL CLIMATIC CONDITIONS
	HISTORIC	
	CAMAS PRAIRIE	
1,000	ROCKY CANYON	COOL, MOIST WINTERS WARM, MOIST SUMMERS
2,000		
3,000	GRAVE CREEK	COOL, WET WINTERS WARM, MOIST SUMMERS
4,000		
5,000		
6,000	CRAIG MOUNTAIN	MILD, DRY WINTERS HOT, DRY SUMMERS
7,000		
8,000		
9,000		
10,000	COOPER'S FERRY II	VERY COLD, DRY WINTERS VERY HOT, DRY SUMMERS
11,000	COOPER'S FERRY I	
	?	

This information was derived from research conducted by Dr. Loren Davis, Oregon State University. Past temperature and precipitation data were gathered from oxygen and carbon isotopes collected from mussel shell and soil carbonates carefully excavated from archeological sites. Data revealed that the river supported a more robust riparian vegetation zone until about 2,000 years ago when the river began rapidly downcutting and the riparian zone diminished to its current form.

CULTURE HISTORY PHASES

COOPERS FERRY I

The earliest human inhabitants in the canyon were Native Americans who lived here 11,500 years ago. Little is known about these people. They relied on large ungulates such as elk and deer for food.

COOPERS FERRY II

These people relied on large animals such as deer and elk for sustenance, supplemented with small animals and plant resources. There appears to be an increased use of the riparian zone from the previous phase and there are no apparent permanent structures or camps. Archeological sites with similar artifacts are spread over a large region, stretching as far west as The Dalles, Oregon.

CRAIG MOUNTAIN PHASE

The Craig Mountain Phase developed from the Coopers Ferry II Phase and began around 8,400 years ago.

More is known about these people since more scientific archeological excavations have been conducted on these sites in the region. There is increased settlement and use of the riparian zone.

Stone tools included various knives, scrapers, and projectile points. These people did not use the bow and arrow. The bow and arrow was probably not in use until between 1,000 to 2,000 years ago. Instead, these folks used spears and atlatls. An atlatl was a kind of spear-thrower. A wooden shaft from one to two feet long was held in the hand with the spear rested on a groove in the shaft. The spear was then thrown using a sweeping overhand motion. The shaft acted like a third segment of the arm, allowing the spear to be thrown with great velocity and distance.

Deer and elk were the primary large game animals hunted. A few antelope and bison remains have been found as well. Fish became a more important food item although not a major one during this phase.

Approximately 6,700 years ago, during the Craig Mountain Phase, Mt. Mazama (now Crater Lake, Oregon) erupted, covering this area with a layer of ash about 6 inches deep. The archeological material found both above and below the ash does not have any major differences. Based on the archeological evidence, there did not appear to be any significant impact on the people from the ashfall.

During this phase climatic changes were occurring with a shift from mild, dry winters and hot, dry summers to cool, wet winters and warm, moist summers.

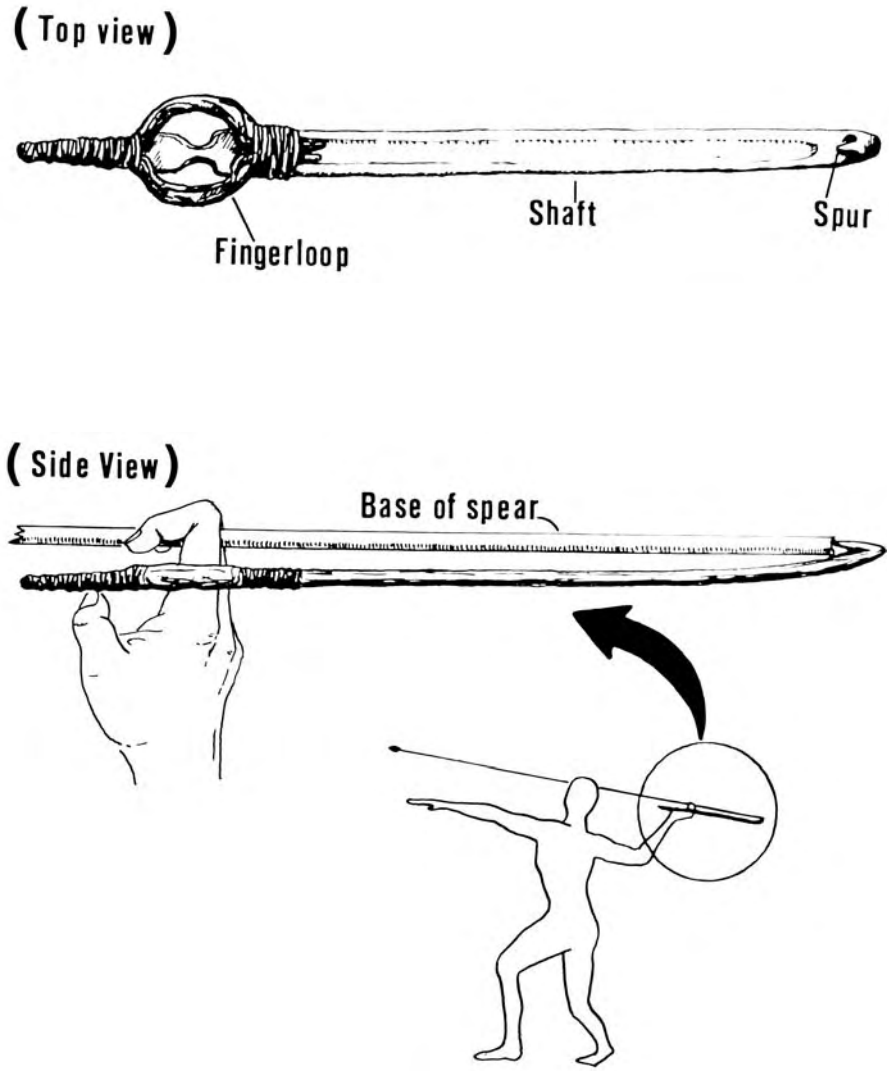

ATLATL

GRAVE CREEK PHASE

The Grave Creek Phase began about 3,500 years ago and lasted until about 2,000 years ago. Generally, similar large game was hunted (deer and elk) as well as mountain sheep. During this phase, river mussels became an important food resource rather than just an occasional addition to the diet. The climate during this phase is characterized with cool, wet winters and warm, moist summers. There is a general increase in precipitation and decrease in temperature.

Artifacts change in frequency, with an increase in the number of grinding tools. The mano is a long, smoothed stone used in conjunction with a flat grinding stone. The mano was pushed back and forth across the flat grinding stone and was typically used to grind seeds.

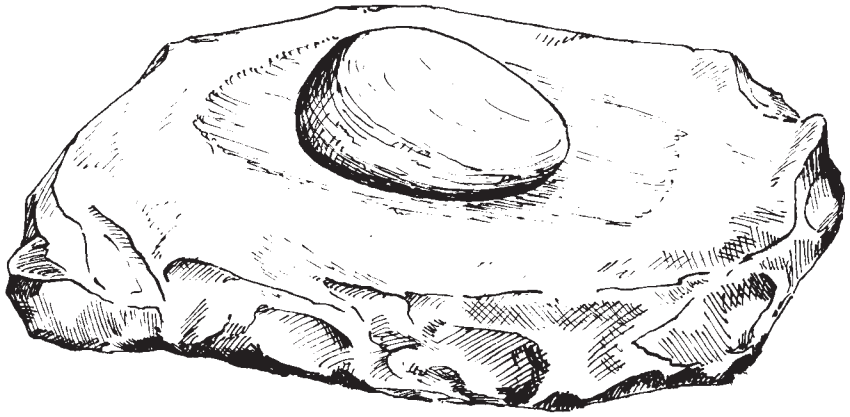

MANO

Other grinding tools are represented by hopper mortar bases and pestles, which were stone tools used to grind roots. A shallow depression was pecked into a large stone. Then a basket (without a bottom) was attached to the stone, over the depression. Roots were then placed inside the depression and basket, and pulverized with the pestle.

HOPPER MORTAR

ROCKY CANYON PHASE

During this phase, permanent winter villages along major river courses became common. The location of permanent villages in canyon bottoms provided protection in the winter due to the milder climate created by the significant change in elevation from the plateau to the canyon bottom.

The people during this phase constructed a semi-subterranean structure often referred to as a "pit house".

The floor of the house was excavated into the ground to help insulate against the cold. The pit could range from one to three feet in depth. Poles were then leaned upright and slightly inward from around the outside edge of the pit and lashed together at the top. Finely sewn mats were then attached to the poles. The mats were made of tule or cattail. Often, poles were laid across the outside of the mats to prevent them from blowing in the wind. Sometimes a thick layer of grass (often ryegrass) was put on the mats around the base of the structure, with dirt placed on the grass. This helped to prevent decay of the mats, and the dirt covering added insulation to the structure. A fire was placed in the middle of the floor for heating the house.

There were cool, moist winters and warm, moist summers during this period. The appearance of the village indicates that populations had become more permanent. A shift may have occurred in the areas where food sources were procured, with increased use of the upland areas away from the river.

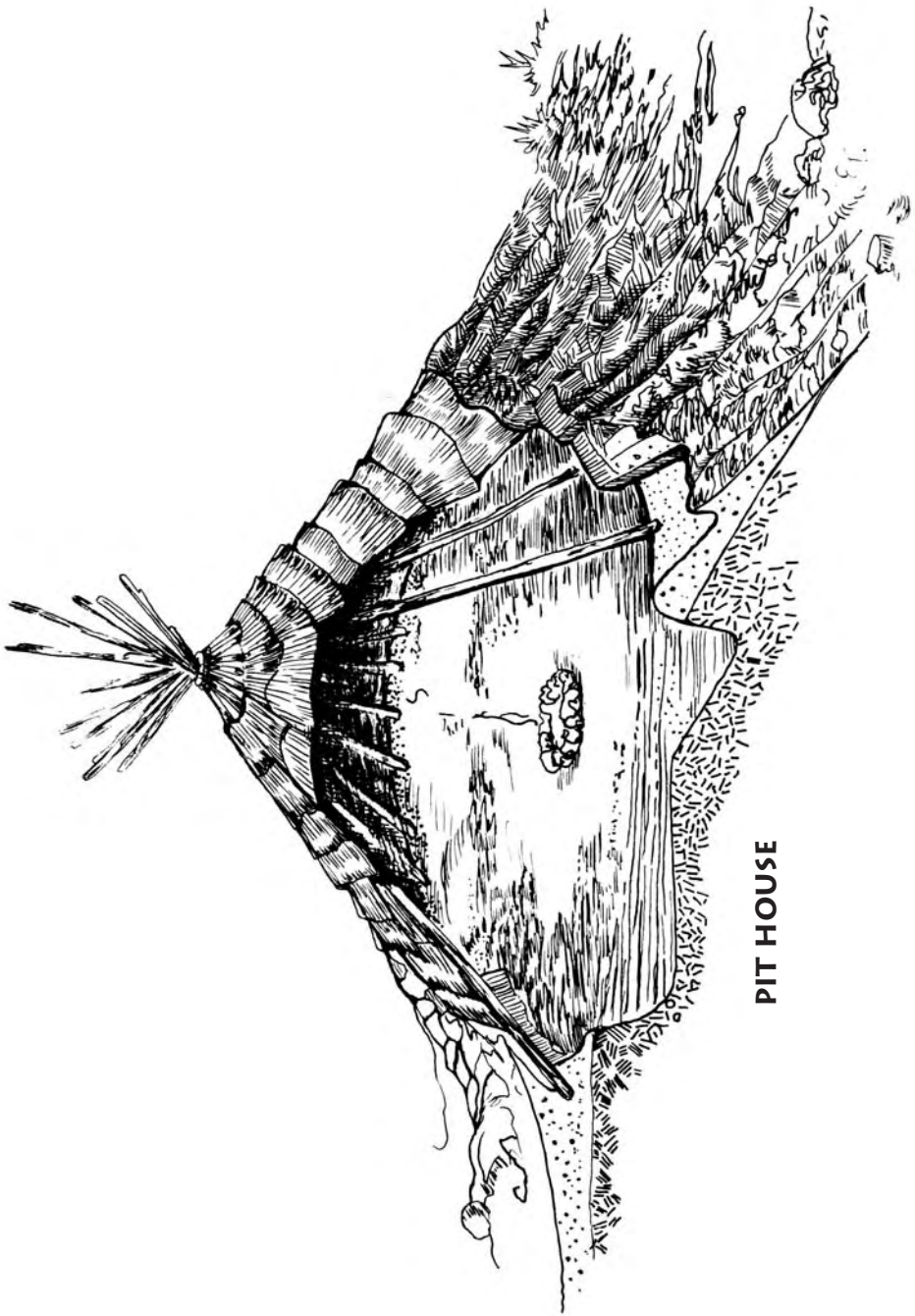

PIT HOUSE

The same general tool kit was used, including grinding tools, net weights, bone tools (possibly used to repair nets), scrapers and projectile points. Projectile points, however, became smaller and more finely crafted and are probably associated with the bow and arrow.

Salmon and steelhead trout became a major food source and were heavily relied upon during this phase. Salmon and steelhead trout annually migrate up the major rivers from the ocean. Salmon move upriver in the spring and summer and spawn in smaller tributary streams in late summer (August and September) of the same year. Steelhead trout move up the large rivers in the summer, but do not move into the tributary streams to spawn until the next spring (May and June). These fish were caught in the larger rivers as well as the smaller tributary streams using traps, nets, spears and hooks. The fish were an extremely rich food source and were dried and used as a winter food as well as for trade. Many other resident fish such as sucker, sturgeon, whitefish and trout were also utilized.

Root crops also grew in importance as a food source, especially cous and camas. Cous is found in the canyon-lands in dry rocky soil. Cous was generally gathered in April and May. Camas is found in the moist upland meadows and prairie and was harvested in June or July as well as in the fall. Both cous and camas produce a bulbous root that can be eaten raw or cooked. The roots could be baked and stored in baskets for winter use and were therefore very valuable. A large number of other plant foods were gathered from the canyon, prairie and mountains.

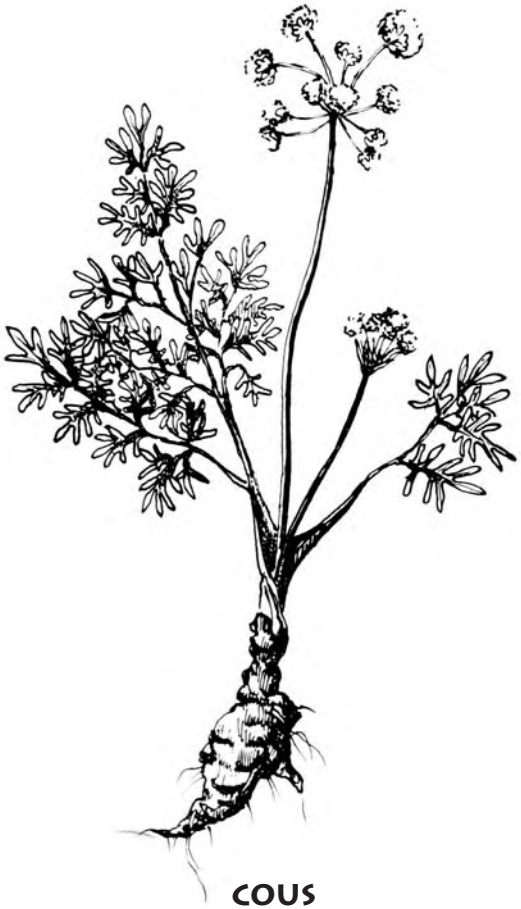

Large game animals were still hunted. Deer and elk remains have been found in sites from this phase.

Generally, the subsequent seasonal cycle was followed. A shift from the canyon environment to a plateau setting occurred around May when the root supplies were ready for harvest and steelhead trout were caught in the tributary streams. In August, the large social groups split into smaller groups that dispersed into the surrounding mountains. These smaller groups primarily focused on hunting and gathering berries. Salmon were also caught from the tributary streams. The people began moving back down to their winter villages along the river in mid-October.

Camas Prairie Phase

This cultural phase is characterized by the introduction of the horse and later, the first Euro-American contact. Probably by 1560 the Indians obtained horses from the Spanish in the southern United States. The horse was then gradually dispersed northward to other groups, including the Nez Perce (about A.D. 1700). The Nez Perce Indians lived in this area for many years and the introduction of the horse had a significant impact on their lives. With the horse the Nez Perce became a much more mobile group. They had always had extensive trade networks, but the time involved in travelling from one place to another was greatly reduced with the addition of the horse, allowing them travel over much greater distances. Trips as far as Oregon and Montana were common.

Meriwether Lewis and William Clark entered the region in 1805. This was the first significant contact between Euro-Americans and the Nez Perce people. Soon after, Euro-Americans arrived in increasing numbers, resulting in more trade goods such as metal and beads being used by the Nez Perce. The influence of the Euro-Americans became greater through the mid-1800s until the Native Americans were relegated to the reservation.

Rock Art

Rock art is a prehistoric site that could have spanned several prehistoric phases of the area's culture history. It is therefore considered separate from the previously outlined prehistoric phases. There are two kinds of rock art; petroglyphs and pictographs. Petroglyphs refer to designs or figures that have been carved into the surface of the rock. No petroglyphs have been recorded along the Lower Salmon River. Pictographs are designs or figures that have been painted on the surface of the rock with variously colored pigments. The purpose of many of the pictographs is unknown but may represent events, trail markers, messages to others, etc.

The pictographs are usually red, a color which comes from ochre (iron oxide). Ochre was ground and mixed with an oil or grease. The mixture was then added to resin from pine or fir trees and applied to the rock, forming a glaze.

Sometimes a mixture of water and coloring material was directly applied to the rock. This oxidized and penetrated into the rock, acting like a stain.

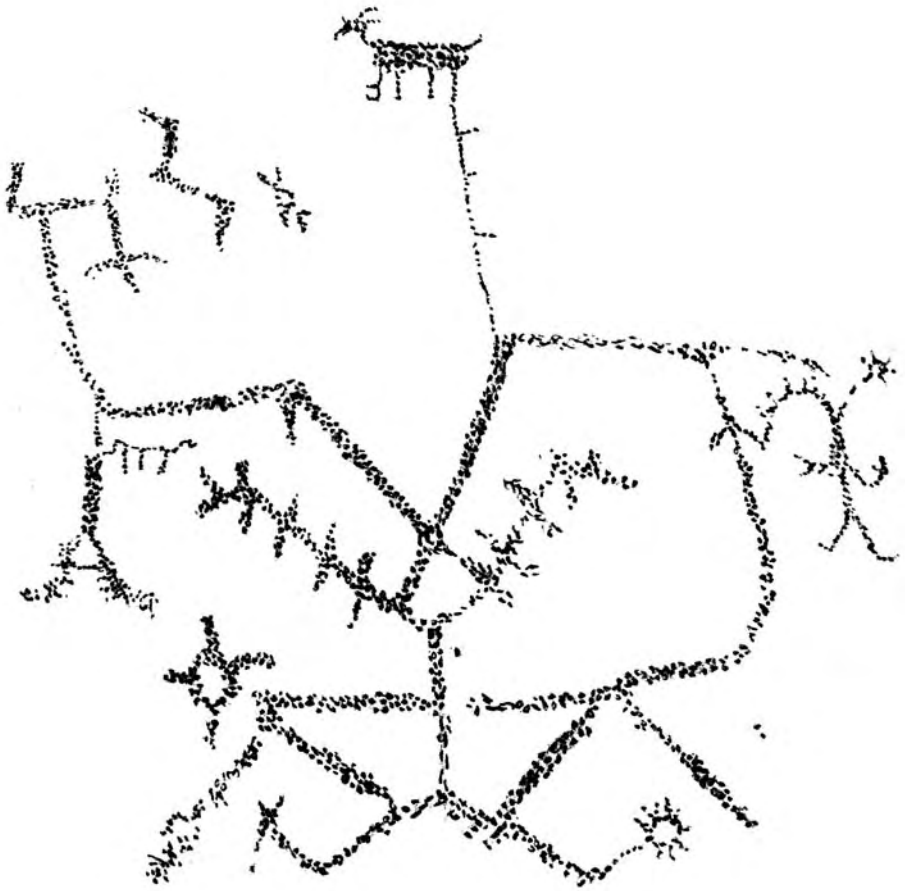

PICTOGRAPH

HISTORIC PHASE

The next cultural development in the area can be referred to as the Historic Phase, or that phase when Euro-Americans first entered the region to the present day. Although historic records are helpful, the archeologist can still obtain information from historic sites that was never recorded in written records.

Different aspects of the Historic Phase will be outlined. Since many of these activities overlapped or occurred at the same time, no clear sequential ordering of events is possible. Therefore, various historic developments are considered separately.

Exploration and Contact

The arrival of Lewis and Clark in 1805 began the Historic Phase. Lewis and Clark traveled along the Clearwater River to the north. Although they did not visit the Lower Salmon River, it is believed that a member of their party traveled to an area around the confluence of the Salmon and Snake Rivers. Soon after, fur trappers began to enter the region.

Donald McKenzie arrived at the confluence of the Little Salmon and Salmon Rivers in 1811. He traveled along the Salmon River to the White Bird area before continuing north on his search for areas rich in furs.

In 1855, the Nez Perce signed a treaty establishing a reservation with the understanding that they would retain control over most of their territory which included the entire Lower Salmon River. But in 1860, gold was discovered on their land creating pressure from Euro-Americans

to change the reservation boundaries. In 1863 a new treaty was drafted, greatly reducing their territory. Only a portion of the Nez Perce agreed to this treaty. Those who did not agree were forced into the new treaty area in 1877. They had to cross the Snake River during high water in June, which made the crossing very dangerous. While camped at Tolo Lake (near Grangeville) before moving onto the reservation at Lapwai, several young men left camp and killed some of the settlers along the Salmon River near White Bird. This instigated a confrontation between the U.S. Army and the Nez Perce Indians which erupted into the Nez Perce War.

The initial battle took place at what is now the White Bird Battlefield on June 17, 1877. After this initial battle, the Nez Perce, led by Chief Joseph and other Nez Perce chiefs, crossed the Salmon River at Horseshoe Bend (near the mouth of Slate Creek). They traveled across Joseph Plains to the west, then turned north and crossed back over the Salmon River near Billy Creek. From Billy Creek they went east, passing Cottonwood, and continued east until arriving near Missoula, Montana. There, they turned south back into Idaho, then east through Yellowstone Park, then, finally, north back to Montana where they were captured in October, 1877.

About 750 Nez Perce people began the arduous journey of 1,170 miles. They had to fight almost the entire way, and when captured, only about 418 remained. The others had been killed or had escaped before they could be captured. The trail they followed has been designated the Nez Perce National Historic Trail.

Mining

The first mining along the Salmon River occurred in 1860 when fine (flour) gold was found. Intensive mining took place from the 1860s through the 1880s. Mining activity continued through the early 1900s, with another large influx of miners during the Depression of the 1930s.

What follows is a description of some of the mining techniques used throughout this time period. The areas mined were typically river terraces. Several methods were used to obtain gold from the placer deposits. Placer deposits are loose gravels and soil deposited by the river that sometimes contain gold and other minerals.

Most of these gold deposits were initially located by using a gold pan. The gold pan was about 10 to 18 inches in diameter and between 2 to 4 inches deep. Sand and gravel were placed in the pan, which was then submerged in the water to saturate the sand and gravel. The pan was then swirled in a circular motion while keeping it level. This permitted the lighter material to be suspended and the heavier material (gold is very heavy) to settle to the bottom. The pan was occasionally tipped to remove the lighter suspended material. This process was repeated until only the gold and other heavy material remained on the bottom. The gold pan is very portable and good for prospecting, but was not efficient or economical for the development of a mine.

The rocker was a piece of equipment that was often used along the Lower Salmon River. The rocker was constructed of wood, about four feet long, one and one-half feet wide and one and one-half feet in height. A hopper was placed in the top of the rocker with a piece of perforated (usually about one-quarter inch holes) sheet iron which was used for the bottom of the hopper. Suspended below the hopper was an apron of canvas or some other material placed at about a 45 degree angle. A series of riffles (blocks of wood to catch the gold) were placed on the bottom board. The bottom of the rocker base had a "rocker" in the front and back. This was a curved piece of board on which the equipment rocks.

A rocker could be used by an individual, but was more productive when used by two people. The operation of the rocker was simple. Sand and gravel were placed in the hopper. The rocker was given a rocking motion while water was poured through the material in the hopper. Only the

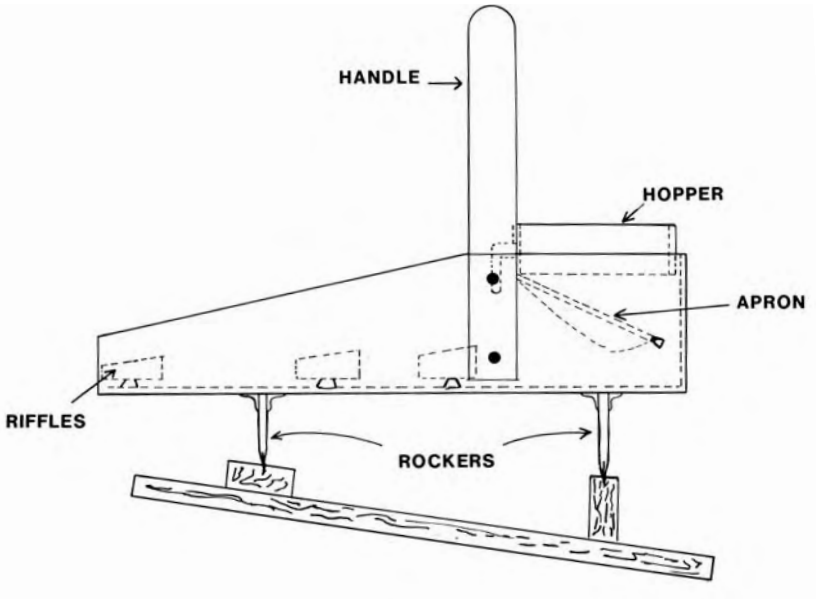

MINING ROCKER

finer material was permitted to go through. Some of the gold and other heavy material was caught in the apron. As the water and gold-bearing solution passed over the riffles, the heavier gold and other minerals settled toward the bottom and were caught behind the riffles. In 1862, it was reported that there were 75 to 100 miners utilizing rockers and sluices and were obtaining gold at an average of $10.00 a day per person in the Rice Creek area.

Many areas were mined on a much larger scale using hydraulic mining methods. Hydraulic mining involved the excavation of a gold-bearing deposit by the use of water under pressure. Dislodged material was then carried in the water, down a series of sluices where the gold was caught behind the riffles in the sluices.

To break down the gold-bearing deposits, there had to be a sufficient supply of water. Water was usually transported to the mine via ditches and flumes from nearby permanent water sources. A ditch was dug down into the soil on the contour of the slope. In those areas where this was not possible, wooden flumes were constructed. The water was carried directly into a reservoir or pressure box above the mine. When the water was carried directly to the mine, it entered a pressure box. The pressure box was a large wooden box constructed of heavy timbers that trapped sand and dirt carried in the ditch.

Metal grates caught the floating debris. Usually a metal pipe was connected to the other end of the box which carried the water straight down the hill, under pressure, to the mine. Reservoirs served the same purpose.

HYDRAULIC MINING

The water was carried from a pressure box or reservoir, through a heavy metal pipe, which led into a hydraulic giant. A hydraulic giant is a large, movable nozzle that could be rotated horizontally and vertically. A jet of water was shot from the nozzle onto the gold-bearing deposits, breaking up the deposits. The smallest hydraulic giants had 7-inch intakes and only a 2-inch nozzle, creating extreme pressures (up to 200 pounds per square inch).

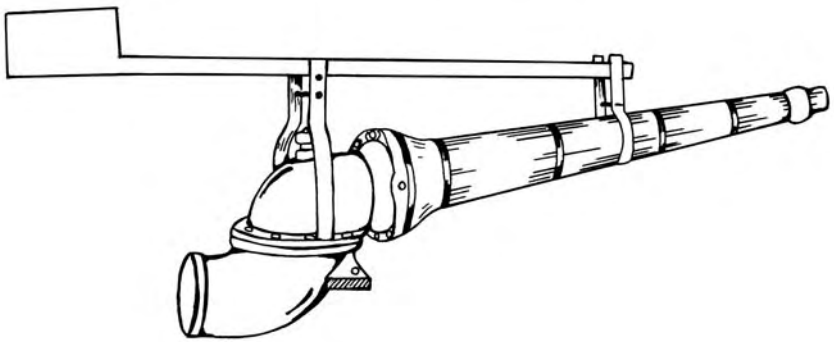

HYDRAULIC GIANT

The excavated gold-bearing material and water were carried away from the working area via sluices. A sluice was a wooden box with no top, about 16 inches wide and about 8 inches high. Sluices were often made in sections, allowing miners to string them together, sometimes for more than 100 feet. Riffles were located along the sluice to catch the gold and other heavy material. The larger rocks were pitched out into tailing piles. Sluices and hydraulic giants were periodically moved about on the claim as gold-bearing deposits were depleted.

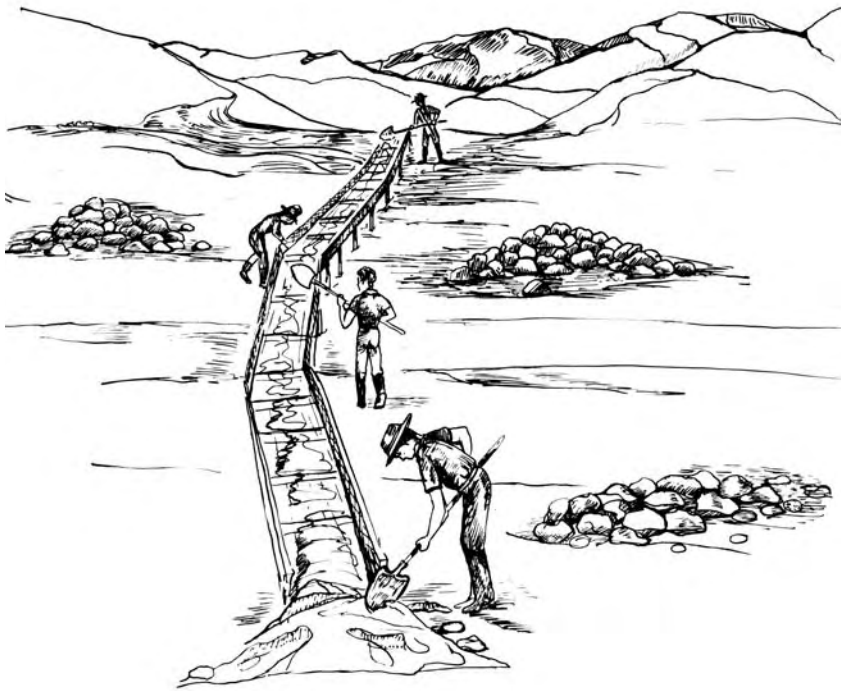

SLUICE BOX – HYDRAULIC MINING

Today, evidence of hydraulic mining can be seen in the high vertical banks and extensive tailings piles. Also, ditches and reservoirs can occasionally be seen. The total amount of gold removed from the Salmon River area is unknown.

Lode (hard rock) mining was limited in the canyon. Some attempts were made to mine copper north of White Bird and near the confluence of the Salmon and Snake Rivers.

The Chinese presence along the Lower Salmon River has formed an interesting part of the area's history. The Chinese first arrived in north Idaho in the 1860s to work in the newly discovered gold fields. Most of the Chinese mining along the Lower Salmon River probably occurred between the 1870s and 1900. Many of the Chinese immigrants came to America intending to work and save enough money to enable them to return to China wealthy individuals. The money they earned in America would make them wealthy in China because of the extreme poverty in China at that time. However, many decided to stay in America and never returned to their homeland.

The Chinese maintained much of their native culture, since most initially planned to return to China. They continued to prepare and consume traditional foods, and speak their native language. Their clothing, medicines, past-times, and even some traditional Chinese architecture endured.

The Chinese were often victims of discrimination because of their differing customs and appearance. There were numerous cases in Idaho of Chinese being chased from their mining claims, robbed and sometimes murdered. Many of the major mining districts had laws prohibiting Chinese from mining. Mineral values were low along the Lower Salmon River compared to the major mining districts in the surrounding area. Because of this, the Chinese were generally allowed to mine without too much interference, although there are some reported cases of harassment.

Some of the places where past residents lived are still visible. These habitations were typically rock structures. The structure foundations average about 3 feet high, 6 feet wide, and 10 feet long. A wooden framework was constructed over the top of the rock walls. A variety of roofing materials were used. Most roofs were probably of canvas attached to a framework of milled lumber or driftwood. The wood was undoubtedly scavenged when the structure was abandoned.

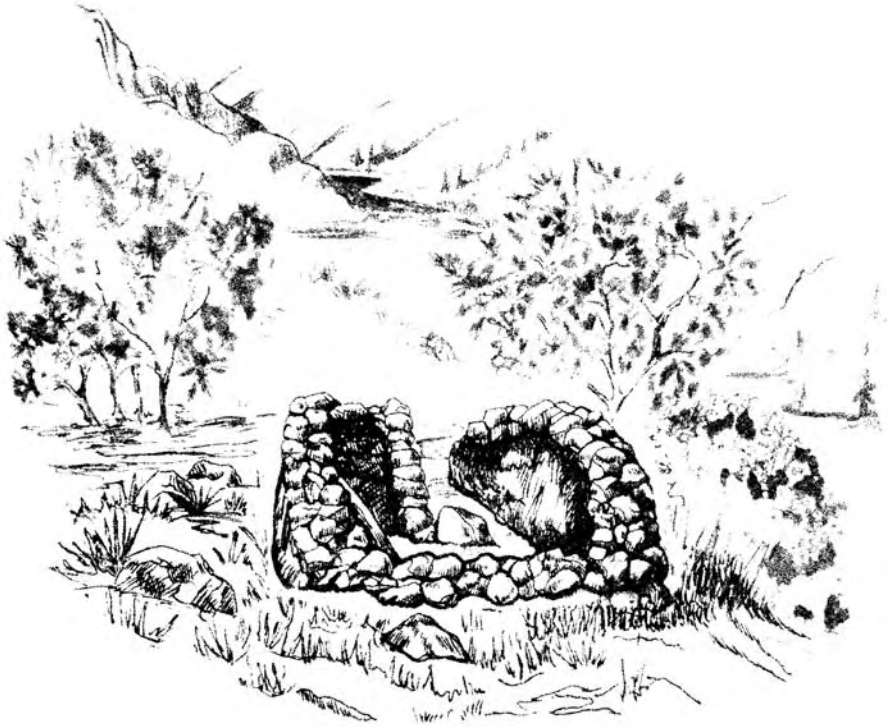

CHINESE ROCK STRUCTURE

Many of these structures had a fireplace. Generally, structures built by Euro-Americans had the fireplace in the wall opposite the entrance. Some rock structures built by the Chinese have the fireplace adjacent to the entrance. This architectural feature is unique to some structures built by the Chinese. The only other known standing structures with this unique architectural style are Chinese structures in some of the old mining areas located in New Zealand.

Agriculture and Ranching

Agriculture had its beginnings near the stations and stops along the trails to the mining regions. The keepers of these stations grew garden crops for their own use and eventually these gardens expanded in size, supplying the needs of the miners. Some miners (especially the Chinese) had small garden plots on their mining claims. Most of the land along the Salmon River was not well suited for major farming development, but was more appropriate for ranching activity.

The first cattle in the region came with the first settlers. Early stockmen are believed to have driven 1,000 cattle into the area in the early 1860s. Gradually there was a shift in emphasis from mining to farming and ranching along the river. Sheep were also brought into this area and feuds arose between the cattleman and sheepman over the use of the range. Some of these feuds resulted in poisoned water holes, crop destruction, and in some cases, murder.

Transportation

Ferries formed an important link across a forbidding barrier. They were used to move both people and livestock across the Lower Salmon River. Ferries were located at Shearer's (near Elkhorn Creek), John Day Creek, White Bird, Cooper's Bar (near Rice Creek), Landcaster (near American Bar), and Billy Creek. Other locations also had ferries in operation for short periods of time.

By the early 1900s, many areas were settled with a system of trails and roads which lead to homesteads, mines, and small communities. The stage road between White Bird and Riggins was completed between 1894 and 1898. The construction of Highway 95 in 1931 obliterated most of the stage road.

Captain H. Guleke utilized the Salmon River in the early 1900s to transport people, as well as goods, in large sweep boats (see illustration on page 30). Sweep boat dimensions were roughly 30 feet long, 10 feet wide, and 4 feet deep. The sweeps consisted of two poles (sometimes made of peeled lodgepole pine trees) to which a 12-foot blade was attached. Sweeps were located at the bow and the stern and took one person to operate each one. The large sweep boats were sold when the trip was over since there was no way to get the boats back upriver. The National Geographic Society conducted an expedition down the Lower Salmon River using sweep boats in 1935.

The first railroad survey of the Salmon River took place in 1872, by Northern Pacific. The survey covered the eastern side of the river and was to go from Salmon to Lewiston.

SWEEP BOAT

This route was later abandoned because of the potential high cost of construction. In the early 1900s there was renewed interest in railroads along the river, but an adequate route was never located.

A Civilian Conservation Corps (CCC) camp was located near French Creek in 1933. The CCC constructed the road from Riggins to French Creek and from French Creek into the Payette National Forest.

From 1920 to 1940, a road from Graves Creek to White Bird (paralleling the Lower Salmon River) was planned to shorten the distance from Cottonwood to White Bird. The road was under construction as part of a Work Projects Administration project in 1939, but all work was suspended in 1940, reportedly because of political pressure from the nearby town of Grangeville which would have been by-passed.

PROTECTION OF OUR CULTURAL RESOURCES

Spread along the Lower Salmon River are sites representing a diverse culture history. Viewing these sites in their natural setting can be a memorable experience. The artifacts are important in terms of their location in or on the ground. Where they are found and what is found near them supply information critical to interpreting the human activities that occurred there. For example, if an undisturbed rock structure is found in context (grouped together) with a scatter of Chinese artifacts, it can be inferred that the structure was lived in by Chinese.

If the rock structure is associated with old hydraulic mine tailings, it can be further deduced that the Chinese hydraulically mined the area. Further study might yield dates of the artifacts; determine what kinds of food were consumed; what recreational activities were pursued; etc. However, if artifacts are taken, the rock walls of the structure destroyed, or the site vandalized, then there is little left to interpret. An important part of the past is lost forever.

Our cultural heritage is being destroyed and is disappearing at an alarming rate. You can preserve these cultural resources in their current condition by not climbing over banks from sandy beaches to reach existing trails or terraces. Climbing over banks accelerates erosion and destroys some sites. Please do not walk or lean on the walls of rock structures. If the rock walls are weakened and collapse, it is virtually impossible to restore the walls to their original condition. Pictographs are very fragile, so please don't touch them. Oils from your fingers can cause the pictographs to deteriorate. Some people pick up artifacts without realizing their importance. Please leave them where they are found.

Cultural resource values have been recognized through the enactment of various laws to protect these resources. The Archaeological Resources Protection Act of 1979 provides for severe penalties for unauthorized excavation or vandalism of archeological sites on public land. To help protect your heritage you are asked to report any vandalism to the Bureau of Land Management office.

FURTHER INFORMATION

This booklet is an outline of cultural resources and the culture history of the Lower Salmon River. More detailed information is available. Information on the Nez Perce Tribal heritage can be obtained from the Nez Perce Tribe at Lapwai, Idaho or from the Nez Perce National Historical Park at Spalding, Idaho. Information on prehistory or history of the area, or comments on this booklet can be directed to the archeologist at the address indicated below. Information can also be provided on how you can further help the Bureau of Land Management with the management of our public lands.

BUREAU OF LAND MANAGEMENT
David Sisson, District Archeologist
Coeur d'Alene District
Cottonwood Field Office
Route 3, Box 181
Cottonwood, Idaho 83522

Phone: (208) 962-3245
E-mail: dsisson@blm.gov