APPENDIX A
PERMIT APPLICATIONS

Application for Transmission and Utility Systems and Facilities on Federal Lands

June 8, 2007

STANDARD FORM 299 (1/2006)
Prescribed by DOI/USDA/DOT
P.L. 96487 and Federal
Register Notice 5-22-95

RECEIVED
BUREAU OF LAND MGMT.
GRAND JCT., CO
2007 JUN -8 PM 3:27

APPLICATION FOR TRANSPORTATION AND UTILITY SYSTEMS AND FACILITIES ON FEDERAL LANDS

FORM APPROVED
OMB NO. 1004-0189
Expires: November 30, 2008

FOR AGENCY USE ONLY
Application Number
Date filed

NOTE: Before completing and filing the application, the applicant should completely review this package and schedule a preapplication meeting with representatives of the agency responsible for processing the application. Each agency may have specific and unique requirements to be met in preparing and processing the application. Many times, with the help of the agency representative, the application can be completed at the preapplication meeting.

1. Name and address of applicant *(include zip code)*

Grand Valley Rural Power Lines, Inc.
PO Box 190
Grand Junction, CO 81502

2. Name, title, and address of authorized agent if different from Item 1 *(include zip code)*

Jarrett Broughton, CEO and General Manager

3. TELEPHONE *(area code)*
Applicant **(970) 242-0040**
Authorized Agent **(970) 564-9261**

4. As applicant are you? *(check one)*
- a. ☐ Individual
- b. ☑ Corporation*
- c. ☐ Partnership/Association*
- d. ☐ State Government/State Agency
- e. ☐ Local Government
- f. ☐ Federal Agency

** If checked, complete supplemental page*

5. Specify what application is for: *(check one)*
- a. ☑ New authorization
- b. ☐ Renewing existing authorization No.
- c. ☐ Amend existing authorization No.
- d. ☐ Assign existing authorization No.
- e. ☐ Existing use for which no authorization has been received*
- f. ☐ Other*

** If checked provide details under Item 7*

6. If an individual, or partnership are you a citizen(s) of the United States? ☐ Yes ☐ No

7. Project description *[describe in detail]:* (a) Type of system or facility, *(e.g., canal, pipeline, road);* (b) related structures and facilities; (c) physical specifications *(length, width, grading, etc.);* (d) term of years needed; (e) time of year of use or operation; (f) Volume or amount of product to be transported; (g) duration and timing of construction; and (h) temporary work areas needed for construction *(Attach additional sheets, if additional space is needed.)*

The project is a 69kV transmission power line in Mesa County that enters BLM at 14 Road and the Highline Canal and extends approximately nine miles north (and slightly west) to the new Red Cliff Mine Substation near the base of the Bookcliffs.

Please see attached "Plan of Developement" for 69kV transmission line to supply the new Red Cliff Mine Substation.

8. Attach a map covering area and show location of project proposal

9. State or local government approval: ☐ Attached ☐ Applied for ☑ Not required

10. Nonreturnable application fee. ☐ Attached ☐ Not required

11. Does project cross international boundary or affect international waterways? ☐ Yes ☑ No *(If "yes," indicate on map)*

12. Give statement of your technical and financial capability to construct, operate, maintain, and terminate system for which authorization is being requested.

Grand Valley Power is the electric utility provider for the area which includes the Red Cliff Mine location. GVP holds a Certificate of Public Convenience and Necessity from the State of Colorado to provide electric service in this location. GVP owns and operates a substantial electric utility system including transmission lines, substations, and distribution lines in Mesa County. The proposed line will be an extension of the GVP system and will use GVP standard design and construction methods. GVP is technically and financially capable of completing the project described in this application.

(Continued on page 2)

This form is authorized for local reproduction.

13a. Describe other reasonable alternative routes and modes considered.

The proposed 69 kV transmission line is covered within the Environmental Impact Statement being prepared by BLM for the Red Cliff Mine project. Refer to the EIS documentation for alternatvies that are being analyzed.

b. Why were these alternatives not selected?

See 13 a. above.

c. Give explanation as to why it is necessary to cross Federal Lands

To supply power to the Red Cliff Mine requires crossing Federal lands because the mine is located on Federal Lands.

14. List authorizations and pending applications filed for similar projects which may provide information to the authorizing agency. *(Specify number, date, code, or name)*

Grand Valley Power holds a number of BLM Right-Of-Way grants for electric lines in Mesa County.

15. Provide statement of need for project, including the economic feasibility and items such as: (a) cost of proposal *(construction, operation, and maintenance);* (b) estimated cost of next best alternative; and (c) expected public benefits.

The project is necessary to provide adequate electrical power to the Red Cliff Mine. Estimated cost of construction is approximately $130,000 per mile for the 69kV transmission line with operations and maintenance costs to be approximately 5% of the total construction costs per year. Refer to EIS submittals for alternatives. Public benefits include increased tax revenues, creation of jobs.

16. Describe probable effects on the population in the area, including the social and economic aspects, and the rural lifestyles.

Coal mining is an important contributor to the economy and social fabric of many regional communities. Economic activity and growth can foster improvements in social conditions in a number of ways. These include the direct creation of jobs, with corresponding flows of income and wealth accumulation. Economic growth also allows more resources to be used for social services such as health, education and welfare, both through private and public spending.

17. Describe likely environmental effects that the proposed project will have on: (a) air quality; (b) visual impact; (c) surface and ground water quality and quantity; (d) the control or structural change on any stream or other body of water; (e) existing noise levels; and (f) the surface of the land, including vegetation, permafrost, soil, and soil stability.

Environmental effects are negligible. This 69 kV line will have the same visual effect as other existing powerlines in the vicinity of the project. Please see Plan of Development for mitigation details.

18. Describe the probable effects that the proposed project will have on (a) populations of fish, plantlife, wildlife, and marine life, including threatened and endangered species; and (b) marine mammals, including hunting, capturing, collecting, or killing these animals.

Effects on plants and animals are negligible. Please see Plan of Development for mitigation details.

19. State whether any hazardous material, as defined in this paragraph, will be used, produced, transported or stored on or within the right-of-way or any of the right-of-way facilities, or used in the construction, operation, maintenance or termination of the right-of-way or any of its facilities. "Hazardous material" means any substance, pollutant or contaminant that is listed as hazardous under the Comprehensive Environmental Response, Compensation, and Liability Act of 1980, as amended, 42 U.S.C. 9601 et seq., and its regulations. The definition of hazardous substances under CERCLA includes any "hazardous waste" as defined in the Resource Conservation and Recovery Act of 1976 (RCRA), as amended, 42 U.S.C. 9601 et seq., and its regulations. The term hazardous materials also includes any nuclear or byproduct material as defined by the Atomic Energy Act of 1954, as amended, 42 U.S.C. 2011 et seq. The term does **not** include petroleum, including crude oil or any fraction thereof that is not otherwise specifically listed or designated as a hazardous substance under CERCLA Section 101(14), 42 U.S.C. 9601(14), nor does the term include natural gas.

None

20. Name all the Department(s)/Agency(ies) where this application is being filed.

BLM - Grand Junction Field Office

I HEREBY CERTIFY, That I am of legal age and authorized to do business in the State and that I have personally examined the information contained in the application and believe that the information submitted is correct to the best of my knowledge.

Signature of Applicant: Garrett Brownlee | Date: June 8, 2007

Title 18 U.S.C. Section 1001 and Title 43 U.S.C. Section 1212, make it a crime for any person knowingly and willfully to make to any department or agency of the United States any false, fictitious, or fraudulent statements or representations as to any matter within its jurisdiction.

(Continued on page 3)

APPLICATION FOR TRANSPORTATION AND UTILITY SYSTEMS AND FACILITIES ON FEDERAL LANDS

GENERAL INFORMATION
ALASKA NATIONAL INTEREST LANDS

This application will be used when applying for a right-of-way, permit, license, lease, or certificate for the use of Federal lands which lie within conservation system units and National Recreation or Conservation Areas as defined in the Alaska National Interest Lands Conservation Act. Conservation system units include the National Park System, National Wildlife Refuge System, National Wild and Scenic Rivers System, National Trails System, National Wilderness Preservation System, and National Forest Monuments.

Transportation and utility systems and facility uses for which the application may be used are:

1. Canals, ditches, flumes, laterals, pipes, pipelines, tunnels, and other systems for the transportation of water.
2. Pipelines and other systems for the transportation of liquids other than water, including oil, natural gas, synthetic liquid and gaseous fuels, and any refined product produced therefrom.
3. Pipelines, slurry and emulsion systems, and conveyor belts for transportation of solid materials.
4. Systems for the transmission and distribution of electric energy.
5. Systems for transmission or reception of radio, television, telephone, telegraph, and other electronic signals, and other means of communications.
6. Improved rights-of-way for snow machines, air cushion vehicles, and all-terrain vehicles.
7. Roads, highways, railroads, tunnels, tramways, airports, landing strips, docks, and other systems of general transportation.

This application must be filed simultaneously with each Federal department or agency requiring authorization to establish and operate your proposal.

In Alaska, the following agencies will help the applicant file an application and identify the other agencies the applicant should contact and possibly file with:

Department of Agriculture
Regional Forester, Forest Service (USFS)
Federal Office Building, P.O. Box 21628
Juneau, Alaska 99802-1628
Telephone: (907) 586-7847 *(or a local Forest Service Office)*

Department of the Interior
Bureau of Indian Affairs (BIA)
Juneau Area Office
9109 Mendenhall Mall Road, Suite 5, Federal Building Annex
Juneau, Alaska 99802
Telephone: (907) 586-7177

Bureau of Land Management (BLM)
222 West 7th Ave., Box 13
Anchorage, Alaska 99513-7599
Telephone: (907) 271-5477 *(or a local BLM Office)*

National Park Service (NPS)
Alaska Regional Office, 2525 Gambell St., Rm. 107
Anchorage, Alaska 99503-2892
Telephone: (907) 257-2585

U.S. Fish & Wildlife Service (FWS)
Office of the Regional Director
1011 East Tudor Road
Anchorage, Alaska 99503
Telephone: (907) 786-3440

Note-Filings with any Interior agency may be filed with any office noted above or with the: Office of the Secretary of the Interior, Regional Environmental Officer, Box 120, 1675 C Street, Anchorage, Alaska 99513.

Department of Transportation
Federal Aviation Administration
Alaska Region AAL-4,222 West 7th Ave., Box 14
Anchorage, Alaska 99513-7587
Telephone: (907) 271-5285

NOTE - The Department of Transportation has established the above central filing point for agencies within that Department. Affected agencies are: Federal Aviation Administration (FAA), Coast Guard (USCG), Federal Highway Administration (FHWA), Federal Railroad Administration (FRA).

OTHER THAN ALASKA NATIONAL INTEREST LANDS

Use of this form is not limited to National Interest Conservation Lands of Alaska.

Individual departments/agencies may authorize the use of this form by applicants for transportation and utility systems and facilities on other Federal lands outside those areas described above.

For proposals located outside of Alaska, applications will be filed at the local agency office or at a location specified by the responsible Federal agency.

SPECIFIC INSTRUCTIONS
(Items not listed are self-explanatory)

Item

7 Attach preliminary site and facility construction plans. The responsible agency will provide instructions whenever specific plans are required.

8 Generally, the map must show the section(s), township(s), and ranges within which the project is to be located. Show the proposed location of the project on the map as accurately as possible. Some agencies require detailed survey maps. The responsible agency will provide additional instructions.

9, 10, and 12 - The responsible agency will provide additional instructions.

13 Providing information on alternate routes and modes in as much detail as possible, discussing why certain routes or modes were rejected and why it is necessary to cross Federal lands will assist the agency(ies) in processing your application and reaching a final decision. Include only reasonable alternate routes and modes as related to current technology and economics.

14 The responsible agency will provide instructions.

15 Generally, a simple statement of the purpose of the proposal will be sufficient. However, major proposals located in critical or sensitive areas may require a full analysis with additional specific information. The responsible agency will provide additional instructions.

16 through 19 - Providing this information in as much detail as possible will assist the Federal agency(ies) in processing the application and reaching a decision. When completing these items, you should use a sound judgment in furnishing relevant information. For example, if the project is not near a stream or other body of water, do not address this subject. The responsible agency will provide additional instructions.

Application must be signed by the applicant or applicant's authorized representative.

If additional space is needed to complete any item, please put the information on a separate sheet of paper and identify it as "Continuation of Item".

(For supplemental, see page 4)

SUPPLEMENTAL

NOTE: The responsible agency(ies) will provide additional instructions	CHECK APPROPRIATE BLOCK	
I - PRIVATE CORPORATIONS	ATTACHED	FILED*
a. Articles of Incorporation	☐	☑
b. Corporation Bylaws	☐	☑
c. A certification from the State showing the corporation is in good standing and is entitled to operate within the State.	☐	☑
d. Copy of resolution authorizing filing	☐	☑
e. The name and address of each shareholder owning 3 percent or more of the shares, together with the number and percentage of any class of voting shares of the entity which such shareholder is authorized to vote and the name and address of each affiliate of the entity together with, in the case of an affiliate controlled by the entity, the number of shares and the percentage of any class of voting stock of that affiliate owned, directly or indirectly, by that entity, and in the case of an affiliate which controls that entity, the number of shares and the percentage of any class of voting stock of that entity owned, directly or indirectly, by the affiliate.	☐	☐
f. If application is for an oil or gas pipeline, describe any related right-of-way or temporary use permit applications, and identify previous applications	☐	☐
g. If application is for an oil and gas pipeline, identify all Federal lands by agency impacted by proposal.	☐	☐
II - PUBLIC CORPORATIONS		
a. Copy of law forming corporation	☐	☐
b. Proof of organization	☐	☐
c. Copy of Bylaws	☐	☐
d. Copy of resolution authorizing filing	☐	☐
e. If application is for an oil or gas pipeline, provide information required by Item "I-f" and "I-g" above.	☐	☐
III - PARTNERSHIP OR OTHER UNINCORPORATED ENTITY		
a. Articles of association, if any	☐	☐
b. If one partner is authorized to sign, resolution authorizing action is	☐	☐
c. Name and address of each participant, partner, association, or other	☐	☐
d. If application is for an oil or gas pipeline, provide information required by Item "I-f" and "I-g" above.	☐	☐

* If the required information is already filed with the agency processing this application and is current, check block entitled "Filed." Provide the file identification information (e.g., number, date, code, name). If not on file or current, attach the requested information.

(Continued on page 5)

NOTICES

NOTE: This applies to the Department of the Interior/Bureau of Land Management (BLM).

The Privacy Act of 1974 provides that you be furnished with the following information in connection with the information provided by this application for an authorization.
AUTHORITY: 16 U.S.C. 310 and 5 U.S.C. 301.
PRINCIPAL PURPOSE: The primary uses of the records are to facilitate the (1) processing of claims or applications; (2) recordation of adjudicative actions; and (3) indexing of documentation in case files supporting administrative actions.
ROUTINE USES: BLM and the Department of the Interior (DOI) may disclose your information on this form: (1) to appropriate Federal agencies when concurrence or supporting information is required prior to granting or acquiring a right or interest in lands or resources; (2) to members or the public who have a need for the information that is maintained by BLM for public record; (3) to the U.S. Department of Justice, court, or other adjudicative body when DOI determines the information is necessary and relevant to litigation; (4) to appropriate Federal, State, local, or foreign agencies responsible for investigating, prosecuting violation, enforcing, or implementing this statute, regulation, or order; and (5) to a congressional office when you request the assistance of the Member of Congress in writing.
EFFECT OF NOT PROVIDING THE INFORMATION: Disclosing this information is necessary to receive or maintain a benefit. Not disclosing it may result in rejecting the application.

The Paperwork Reduction Act of 1995 requires us to inform you that:
The Federal agencies collect this information from applicants requesting right-of-way, permit, license, lease, or certifications for the use of Federal Lands.
Federal agencies use this information to evaluate your proposal.
No Federal agency may request or sponsor and you are not required to respond to a request for information which does not contain a currently valid OMB Control Number.

BURDEN HOURS STATEMENT: The public burden for this form is estimated at 25 hours per response including the time for reviewing instructions, gathering and maintaining data, and completing and reviewing the form. Direct comments regarding the burden estimate or any other aspect of this form to: U.S. Department of the Interior, Bureau of Land Management (1004-0189), Bureau Information Collection Clearance Officer (WO-630) 1849 C Street, N.W., Mail Stop 401 LS, Washington, D.C. 20240.

A reproducible copy of this form may be obtained from the Bureau of Land Management, Land and Realty Group, 1620 L Street, N.W., Rm. 1000 LS, Washington, D.C. 20036.

PLAN OF DEVELOPMENT

FOR THE

69KV TRANSMISSION LINE PROJECT TO SUPPLY THE NEW RED CLIFF MINE SUBSTATION

Submitted to:

Bureau of Land Management
Grand Junction Field Office

Submitted by:

GRAND VALLEY RURAL POWER LINES, INC.

June 2007

69KV TRANSMISSION LINE PROJECT
TO SUPPLY THE NEW RED CLIFF MINE SUBSTATION
PLAN OF DEVELOPMENT

Grand Valley Rural Power Lines, Inc. (GVP) has proposed the construction of a new 69 kilovolt (kV) Transmission Line Project to the Proposed Red Cliff Mine Substation that will be located approximately 11 miles northeast of the town of Loma, Colorado, and 1.5 miles east of Colorado State Highway 139 Mesa County, Colorado. This plan of development includes descriptions of and guidelines for the design, construction, operation, reclamation, and maintenance of the 69kV Transmission Line Project to the proposed Red Cliff Mine Substation. GVP will construct and operate the project in conformity with the approved plan of development that shall be included as part of the right-of-way grant. These guidelines have been developed jointly by GVP and the Bureau of Land Management (BLM), and will apply to the proposed route under consideration. The design, construction, operation, and maintenance of the project will meet or exceed the requirements of the National Electrical Safety Code and U.S. Department of Labor Occupational Safety and Health Standards, as well as GVP's requirements for the safety and protection of landowners and their property.

PROPOSED ACTION

The proposed action is to construct a 69kV transmission line entering BLM approximately at the section line between sections 10 and 11 in T2N, R3W at 14 Road and the Highline Canal and terminating at the Red Cliff Mine Substation located in T8S, R102W, Section 16 (Figure 1). The construction and operation of the project will provide the single source of power for the Red Cliff Mine Substation which will power the Red Cliff Mine.

The estimated length of the route is approximately nine miles. The proposed route generally follows 14 Road north crossing the Highline Canal, then stepping eastward and following the section line through federal lands. The permanent right-of-way requested for the project is a non-exclusive 100 feet, 50 feet either side of centerline of the powerline. The temporary use areas will be specifically designated on a map prior to issuance of the temporary use permit. A survey map will be provided showing the location of each structure and any temporary use areas.

TRANSMISSION LINE DESCRIPTION

The proposed transmission line would be designed for one 69kV three-phase (three conductors) circuit and one static wire. Single-pole wood structures are proposed for the majority of the project. An illustration of a typical 69kV single-pole wood structure is provided in Figure 2. The span length between structures will average approximately 300 feet but in some cases could be as long as 700 feet. Typical design characteristics are listed in Table 1. Final design characteristics will be determined in the detailed design phase of the project.

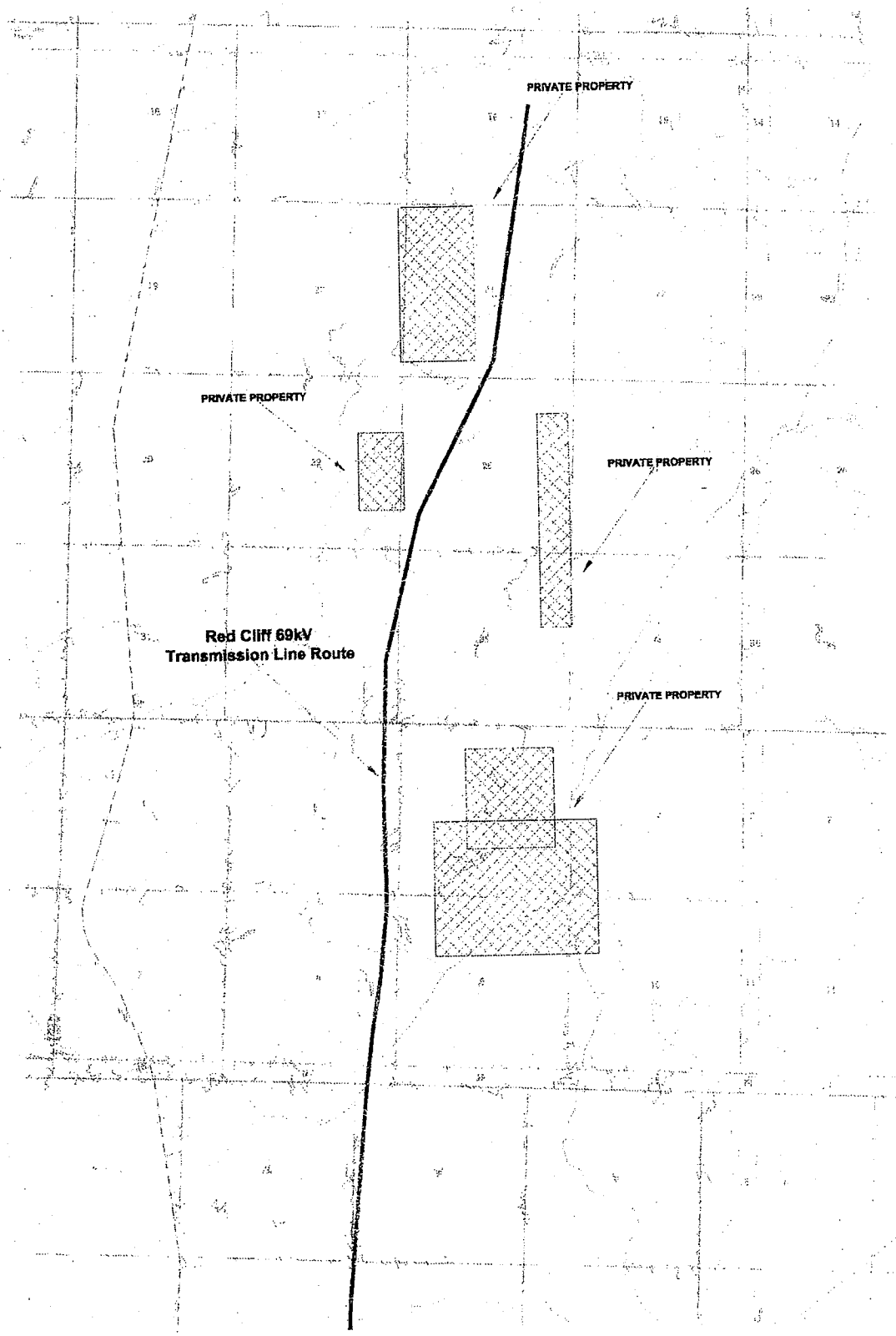

FIGURE 1
TRANSMISSION LINE ROUTE MAP

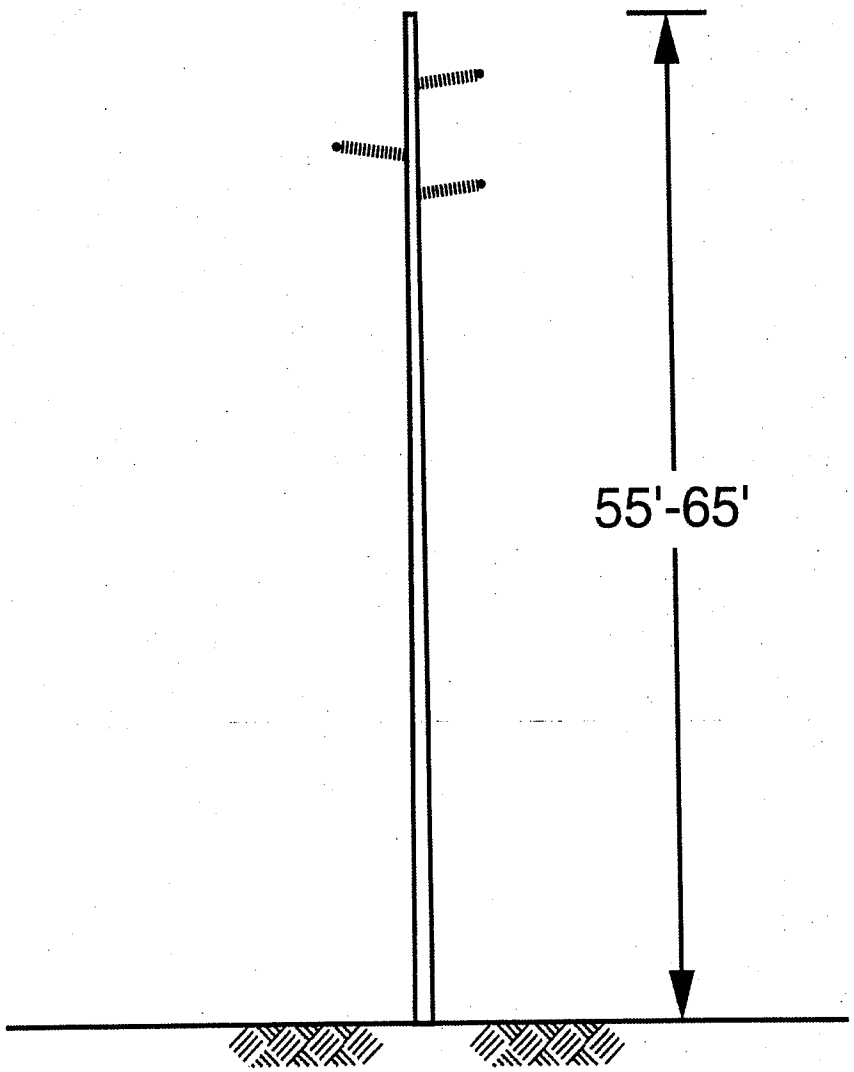

FIGURE 2
TYPICAL STRUCTURE

TABLE 1 TYPICAL DESIGN CHARACTERISTICS	
Line length	Approximately 9 miles will cross BLM land
Type of structure	Single-pole wood
Structure height	55 to 65 feet
Span length	Ruling span 350' across BLM, Ruling span 300' for non-BLM
Number of structures per mile	Approx. 15 structures per mile
Right-of-way width	Approximately 100 feet
Land disturbed (approximate): Temporary Structure site Wire pulling, splicing sites Construction yards (on private land) Permanent Structure	Temporary workspace would include an area between the existing access road to 10 feet beyond the permanent right-of-way; this width would vary between 40 and 60 feet. An area of approximately 30 by 40 feet per structure site is required for line construction equipment. An all-terrain vehicle would be used for wire pulling along the permanent right-of-way. Sites for tensioning equipment are located approximately 10,000 feet apart and the necessary area is approximately 100 feet by 60 feet. Maximum of 3 to 4 acres total Approximately 4 square feet; additional space may be needed in the locations where the pole is guyed
Access roads	Use existing access roads and the line corridor. Some access maintenance may be needed and will only be undertaken as directed by the BLM authorizing officer.
Voltage	69,000 volts phase to phase
Circuit configuration	Single circuit 69kV, Three phase conductors and a single static conductor.
Transmission Conductor size	336.4 KCMIL, 18/1 Merlin, 0.684 inch diameter 3/8" HS OHGW (static), 0.375 inch diameter
Ground clearance of conductor	20.1 feet minimum
Pole depth	Typically between 8 feet and 11 feet deep.

RIGHT-OF-WAY ACQUISITION

New land rights will be required for the transmission line to be obtained in the name of GVP. A grant for up to a 100-foot right-of-way for the portion of the transmission line that will cross federal lands administered by BLM is being requested. Right-of-way rental payments will be determined by BLM for those portions of the transmission line located on federal lands. No additional permanent access road requirements are anticipated.

PROJECT CONSTRUCTION, OPERATION, AND MAINTENANCE

The following section generally describes the activities that are anticipated to occur

before and during project construction and throughout operation and maintenance of the project. Existing roads will provide access for project construction, operation, and maintenance. Overland construction methods will be used when existing access is not available. Compliance with the mitigation measures and stipulations listed at the end of this section will be incorporated as part of the standard operating procedures.

Preconstruction Activities

Engineering Surveys – After a preferred alternative is selected through the National Environmental Policy Act (NEPA) process, on-ground investigations will be completed to accurately locate the centerline of the right-of-way within the selected alternative. The exact centerline will be chosen to best implement design criteria and to satisfy the mitigation measures in the NEPA compliance document. Before construction surveying begins, required permits to survey on federal lands will be obtained. Construction survey work will consist of centerline location and right-of-way boundaries where necessary.

Structure locations will be flagged and staked, and the proposed centerline will be flagged and staked where necessary.

Cultural Resource Surveys – If required by the BLM, BLM-permitted contractors will survey the proposed route prior to construction. Any cultural property that will be directly or indirectly impacted will be subject to evaluation and determination through BLM Section 106 consultation. Project engineers will work with BLM archaeologists to avoid or minimize impacts to any identified cultural resources.

Biological Surveys – The Bald Eagle, Canadian Lynx, Yellow-Billed Cuckoo, De Beque Phacelia and Unita Basin Hookless Cactus are possible species of animal and plant life that will require special consideration in consultation with BLM, Colorado Department of Wildlife, and U.S. Fish and Wildlife Service. Specific mitigation measures for biological resource areas will be developed as part of the environmental impact statement. If necessary, additional surveys or Section 7 consultation will be performed by the BLM.

Construction Activities

Following preconstruction activities, construction activities will include digging holes, assembling and erecting structures, wire stringing, cleanup, and site reclamation. The number of workers and type of equipment expected to be used to construct the proposed transmission line are provided in Table 2.

TABLE 2
TYPICAL TRANSMISSION LINE CONSTRUCTION ESTIMATED PERSONNEL AND EQUIPMENT REQUIRED

Survey	3 people	Equipment: 2 pickup trucks

Hole digging	2 people	Equipment: 1 hole digger 1 pickup truck
Pole haul	2 people	Equipment: 1 pole haul truck
Structure erection	4 people	Equipment: 1 line truck 1 pickup truck
Conductoring	12 people	Equipment: 1 drum puller 1 splicing truck 1 double-wheeled tensioner 1 wire reel trailer 1 line truck 1 sagging equipment 2 pickup trucks
Clean-up	4 people	Equipment: 2 pickup trucks
Rehabilitation	2 people	Equipment: 1 pickup truck
Total personnel required	31 people*	
* More personnel may be used in order to meet schedule.		

Access Roads – Transmission line construction requires the movement of vehicles along the right-of-way. For this project, existing access roads and overland construction will be utilized. No new access road construction is anticipated.

Structure Sites and Right-of-way – Overland construction methods will be used. The clearing of some natural vegetation might be required; however, selective clearing will be performed only when necessary to provide for surveying, electrical clearance, line reliability, and construction and maintenance operations. Rights-of-way will not be chemically treated unless necessary to comply with requirements of a permitting agency.

At each structure site, areas will be needed to facilitate the safe operation of equipment. The temporary construction right-of-way is expected to include the area between the existing access road to a point 10 feet beyond the permanent right-of-way; this is expected to range between 40 and 60 feet in width. In locations where downguys would be required (i.e., locations of sharp turns along the route), an additional 100 feet of temporary workspace would be required in two directions from the structure site to accommodate the structural supports. The vegetation in the work area will be trampled, not cleared, unless approved by the BLM.

Foundation Installation – Excavations for poles are made with power equipment. Where the soil permits, a vehicle-mounted power auger or backhoe is used. In rocky areas, the foundation holes may be excavated by drilling and blasting, or special rock anchors may be installed. Blasting would require drilling holes in the area to be excavated. Conventional or plastic explosives would be used. Safeguards such as blasting mats may be used as necessary to protect adjacent property. After the hole is augered, poles will be

set, backfilled, and tamped using existing spoils. Remaining spoils material will be spread on the ground.

Construction Yards – Two temporary construction yards are anticipated. The location of any temporary yards will be suggested by the contractor and such yard sites on BLM will be submitted to the BLM for approval prior to creation of any yard.

Structure Assembly and Erection – Poles and associated hardware are shipped to each structure site by truck. Structure assembly and mounting of associated line hardware takes place at each site. The assembled structure is then raised and placed in the pre-dug holes.

For public protection during wire installation, guard structures are erected over obstacles such as railroads, existing power lines, and structures. Guard structures consist of H-frame poles placed on either side of the obstacle. These structures prevent ground wire, conductors, or other equipment from falling on an obstacle. Equipment for erecting guard structures includes augers, line trucks, pole trailers, and cranes. Guard structures may not be required on small roads; on such occasions, other safety measures such as barriers, flagmen, or other traffic control are used.

Next, a pilot line is pulled from structure to structure (or strung) by a vehicle and threaded through the stringing sheaves at each tower. Then a larger diameter, stronger line (the pulling line) is attached to the pilot line and strung. This process is repeated until the ground wire or conductor is pulled through all sheaves.

The ground wire and conductor are strung using power pulling equipment at one end and power braking or tensioning equipment at the other end. Sites for tensioning equipment and pulling equipment are approximately 10,000 feet apart. Prior to request for the temporary use permit all tensioning and pulling sites will be specifically located on a map and provided to the BLM.

The tensioning site is an area approximately 150 feet by 60 feet. The tensioner, line truck, and wire trailer that are needed for stringing and anchoring the ground wire or conductors are located at this site. The tensioner, along with the puller, maintains tension on the ground wire or conductor. Maintaining tension ensures adequate ground clearance and is necessary to avoid damage to the ground wire, conductor, or any objects below them during the stringing operation.

The pulling site requires two-thirds the area of the tension site. A puller and trucks are needed for the pulling and temporary anchoring of the ground wire and conductor.

Cleanup – Construction sites, material storage yards, and access roads will be kept in an orderly condition throughout the construction period. Refuse and trash, including stakes and flags, will be removed from the sites and disposed of in an approved manner. No construction equipment oil or fuel will be drained on the ground. Oils or chemicals will be hauled to an approved site for disposal. No open burning of construction trash will

occur on BLM-administered lands.

Reclamation – Following construction and cleanup, reclamation will be completed. The disturbed surfaces will be restored to the original contour of the land surface to the extent determined by the BLM.

Operation and Maintenance

Ground maintenance patrols will review the line periodically. Routine maintenance will include replacing damaged structures, conductors or insulators as needed and tightening nuts and bolts.

MITIGATION MEASURES

As part of standard operating procedures, standard mitigation measures (Table 3) will be implemented throughout the project in order to reduce potential adverse environmental impacts. Most of the impacts are short term and generally occur during the construction period. Project design and implementation of site-specific or selectively recommended mitigation measures (Table 4) will minimize the effect of the project where the potential for long-term adverse impacts may occur.

TABLE 3 STANDARD MITIGATION MEASURES
1. All construction vehicle movement outside of the right-of-way will be restricted to pre-designated access, contractor acquired access, or public roads.
2. The limits of construction activities will be predetermined, with activity restricted to and confined within those limits. No paint or permanent discoloring agents will be applied to rocks or vegetation to indicate survey or construction activity limits. The right-of-way boundary will be flagged in environmentally sensitive areas described in the plan of development to alert construction personnel that those areas will be avoided.
3. In construction areas where re-contouring is not required, vegetation will be left in place wherever possible to avoid excessive root damage and allow for re-sprouting.
4. In construction areas where ground disturbance is significant or where re-contouring is required, surface restoration will occur as required by the BLM. The method of restoration typically will consist of returning disturbed areas to their natural contour (to the extent practical), reseeding or re-vegetating with native plants (if required), installing cross drains for erosion control, placing water bars in the road, and filling ditches. Seed will be tested and certified to contain no noxious weeds as defined by the State of Colorado Agricultural Department. Seed viability also will be tested at a certified lab approved by the authorized officer.
5. Watering facilities (e.g., tanks, developed springs, water lines, wells, etc.) will be repaired or replaced to their pre-disturbed conditions as required by the land management agency if they are damaged or destroyed by construction activities.

6. Prior to construction, all construction personnel will be instructed on the protection of cultural, paleontological, and ecological resources. To assist in this effort, the construction contract will address (a) federal and state laws regarding antiquities, fossils, and plants and wildlife, including collection and removal; and (b) the importance of these resources and the purpose and necessity of protecting them.
7. If required, an initial intensive cultural resource inventory survey will be conducted prior to construction. Impact avoidance and mitigation measures developed in consultation with appropriate land management and regulatory agencies and other interested parties will be implemented subsequent to the completion of the NEPA compliance document. In addition, supplemental surveys of appurtenant impact zones beyond the corridor will be undertaken as needed.
8. Any cultural and/or paleontological resource discovered during construction by GVP or any person working on GVP's behalf on public or federal land will be reported immediately to the authorized officer. GVP will suspend operations in the area until an evaluation is completed to prevent the loss of cultural or scientific values.
9. All construction and maintenance activities will be conducted in a manner that would minimize disturbance to vegetation, drainage channels, and intermittent and perennial stream banks. All existing roads will be left in a condition equal to or better than their condition prior to the construction of the transmission line.
10. All requirements of those entities having jurisdiction over air quality matters will be adhered to and any necessary permits for construction activities would be obtained. Open burning of construction trash (cleared trees, etc.) will not be allowed on BLM-administered lands.
11. Fences and gates, if damaged or destroyed by construction activities, will be repaired or replaced to their original pre-disturbed condition as required by the land management agency. Temporary gates will be installed only with the permission of the land management agency.
12. During operation of the transmission line, the right-of-way will be maintained free of construction related non-biodegradable debris.
13. Totally enclosed containment will be provided for all hazardous materials (if needed) and trash. All construction waste including trash, litter, garbage, other solid waste, petroleum products, and other potentially hazardous materials will be removed to a disposal facility authorized to accept such materials.
14. Structures will be constructed to conform to Suggested Practices for Raptor Protection on Power Lines: ***State of the Art in 2006*** (Raptor Research Foundation, Inc. 2006).
15. If required, third-party environmental contractors will be used throughout the construction effort, from clearing through rehabilitation.
16. GVP will trim trees in preference to cutting trees, and will cut trees in preference to bulldozing them. No tree clearing is anticipated at the time of application.
17. Construction holes left open overnight will be covered to prevent damage to livestock or wildlife.
18. GVP will respond to complaints of line-generated radio or television interference by investigating the complaints and implementing appropriate mitigation measures. The transmission line will be patrolled on a regular basis so that damaged insulators or other line materials that could cause interference are repaired or replaced.
19. GVP will apply necessary mitigation to minimize problems of induced currents and voltages onto conductive objects sharing a right-of-way, to the mutual satisfaction of the parties involved.
20. The proposed hardware and conductor will limit the audible noise, radio interference (RI), and television interference (TVI), due to corona. Tension will be maintained on all insulator assemblies to assure positive contact between insulators, thereby avoiding sparking. Caution will be exercised during construction to avoid scratching or nicking the conductor surface, which may provide points for corona to occur.

TABLE 4 SELECTIVELY RECOMMENDED MITIGATION MEASURES
Note: These selective mitigation measures apply only to specific locations that are identified in the Environmental Assessment or during field investigations and recorded in the plan of development.
1. No widening or upgrading of existing access roads will be undertaken in the area of construction and operation, except for repairs necessary to make roads passable, where soils or vegetation are very sensitive to disturbance.
2. No blading of new access roads in the area of construction and operation is anticipated. Should the need for new access roads be determined, GVP will document these corridors and will comply with all aspects of the BLM right-of-way grant prior to any access road construction. Existing crossings will be utilized at washes. These access routes must be flagged with an easily seen marker and the route must be approved by the authorized officer in advance of use.
3. Modified structure design will be utilized as necessary to minimize ground disturbance, operational conflicts, visual contrast, or avian conflicts.
4. In designated areas, structures will be placed or rerouted so as to avoid sensitive features such as, but not limited to, riparian areas, water courses, and cultural sites, or to allow conductors to clearly span the features, within limits of standard tower design. This will minimize the amount of disturbance to the sensitive features or reduce visual contrast.
5. With the exception of emergency repair situations, right-of-way construction, restoration, maintenance, and termination, activities in designated areas will be modified or discontinued during sensitive periods (e.g., nesting and breeding periods) for candidate, proposed threatened and endangered, or other sensitive animal species. This list will be approved in advance by the authorized officer of the BLM.
6. Existing roads and trails that will be blocked as a result of construction will be rerouted as directed by the authorizing officer.
7. The design of the poles will be determined to achieve the minimum practicable visual impacts.

ADDITIONAL STIPULATIONS

The following additional stipulations in Table 5 will be implemented throughout the construction and operation of the project and will be included as part of the standard operating procedures.

TABLE 5 STIPULATIONS – STANDARD OPERATING PROCEDURES
1. GVP will construct, operate, and maintain the facilities, improvements, and structures within this right-of-way in strict conformity with the plan of development as it is approved and made part of the right-of-way grant. Any relocation, additional construction, or use that is not in accord with the approved plan(s) of development will not be initiated without the prior written approval of the authorized officer. A copy of the complete right-of-way grant, including all stipulations and approved plan(s) of development, will be made available on the right-of-way area during construction, operation, and termination to the authorized officer. Noncompliance with the above shall be grounds for an immediate temporary suspension of activities if it constitutes a threat to public health and safety or the environment.
2. GVP will submit a plan or plans of development that describe in detail the construction, operation, maintenance, and termination of the right-of-way and its associated improvements and/or facilities. The degree and scope of these plans will vary depending on (1) the complexity of the right-of-way or its associated improvements and/or facilities, (2) the anticipated conflicts that require mitigation, and (3) additional technical information required by the authorizing officer. An approved plan of development will be made a part of the right-of-way grant.
3. GVP will contact the authorized officer at least 10 days prior to the anticipated start of construction and/or any surface-disturbing activities. The authorized officer may require and schedule a preconstruction conference with GVP prior to commencement of construction and/or surface-disturbing activities on the right-of-way. GVP, GVP's contractor(s), or agents involved with the construction and/or surface-disturbing activities on the right-of-way should attend this conference to review the stipulations of the grant including the plan(s) of development.
4. GVP will designate a representative(s) who will have the authority to act upon and implement instructions from the authorized officer within a reasonable time when construction or other surface-disturbing activities are underway.
5. The authorized officer may suspend or terminate in whole or in part, any notice to proceed which has been issued when, in his/her judgment, unforeseen conditions arise which result in the approved terms and conditions being inadequate to protect the public health and safety or to protect the environment.
6. The design and location of all facilities shall be approved by the authorized officer prior to construction.
7. The holder will protect all survey monuments found within the right-of-way. Survey monuments include but are not limited to General Land Office and BLM Cadastral Survey Corners, reference corners, witness points, U.S. Coastal and Geodetic benchmarks and triangulation stations, military control monuments, and recognizable civil (both public and private) survey monuments. In the event of obliteration or disturbance of any of the above, GVP will immediately report the incident, in writing, to the authorized officer and the respective installing authority, if known. Where General Land Office or BLM right-of-way monuments or references are obliterated during operations, GVP shall secure the services of a registered land surveyor or a BLM cadastral surveyor to restore the disturbed monuments and references using surveying procedures found in the *Manual of Surveying Instructions for the Survey of the Public Lands of the United States*, latest edition. GVP shall record such survey in the appropriate county and send a copy to the authorized officer. If the BLM cadastral surveyors or other federal surveyors are used to restore the disturbed survey monument, GVP will be responsible for the survey cost.
8. The holder of this right-of-way grant or the holder's successor in interest shall comply with Title VI of the Civil Rights Act of 1964 (42 U.S.C. 2000d et. seq.) and the regulations of the Secretary of Interior issued pursuant hereto.

9. GVP will mark the exterior boundaries of the right-of-way with a stake and/or lath as determined by the authorizing officer. The intervals may be varied at the time of staking at the discretion of the authorized officer. The tops of the stakes and/or laths will be painted and the laths flagged in a distinctive color as determined by the holder. The survey station numbers will be marked on the boundary stakes and/or laths at the entrance to and exit from public land. GVP will maintain all boundary stakes and/or laths in place until final cleanup and restoration are completed and approved by the authorized officer. The stakes and/or laths will then be removed at the direction of the authorized officer.
10. GVP will conduct all activities associated with the construction, operation, and termination of the right-of-way within the authorized limits of the right-of-way.
11. GVP will survey and clearly mark the centerline and/or exterior limits of the right-of-way, as determined by the authorized officer.
12. All design; material; and construction, operation, maintenance, and termination practices will be in accordance with safe and proven engineering practices.
13. GVP will inform the authorized officer within 48 hours of any accidents on federal lands that require reporting to the Department of Transportation as required by 49 CFR Part 195.
14. During conditions of extreme fire danger, operations may be suspended or limited in certain areas.
15. The holder will be liable for damage or injury to the United States to the extent provided by 43 CFR Sec. 2803.1-4. The holder will be held to a standard of strict liability for damage or injury to the United States resulting from fire or soil movement (including landslides and slumps as well as wind and water-caused movement of particles) caused or substantially aggravated by any of the following within the right-of-way or permit area: Activities of the holder including but not limited to construction, operation, maintenance, and termination of the facility. Activities of other parties including but not limited to: - land clearing - earth-disturbing and earth-moving work - blasting - vandalism and sabotage
16. Within 30 days of completion, GVP will submit to the authorized BLM officer, as-built drawings and a certification of construction verifying that the facility has been constructed (and tested) in accordance with the design, plans, specifications, and applicable laws and regulations.
17. Construction sites will be maintained in a sanitary condition at all times; waste materials at those sites will be disposed of promptly at an appropriate waste disposal site. "Waste" means all discarded matter including but not limited to human waste, debris, garbage, refuse, oil drums, petroleum products, ashes, and equipment.

Application for Transmission and Utility Systems and Facilities on Federal Lands

September 27, 2005

J. E. STOVER & ASSOCIATES, INC.

P.O. BOX 60340
GRAND JUNCTION, COLORADO 81506
PHONE: (970) 245-4101, FAX 242-7908

MINE ENGINEERING
MINE RECLAMATION

CIVIL ENGINEERING
CONST. MANAGEMENT

September 27, 2005

Catherine Robertson
BLM Grand Junction Resource Area
2815 H Road
Grand Junction, CO 81506

Re: Central Appalachia Mining, LLC
Mine Expansion Project
Right-of-Way

Dear Ms. Robertson:

On behalf of Central Appalachia Mining, LLC, enclosed is an Application for Transportation and Utility Systems and Facilities on Federal Lands, (Standard Form SSF 299). The right-of-way is necessary to support Central Appalachia Mining's expansion of its mining operation located north of Loma.

Please call if you have any questions.

Sincerely,

J. E. Stover, P.E.
Consulting Engineer

Enclosures

STANDARD FORM 299 (2/2003)
Prescribed by DOI/USDA/DOT
P.L. 96-487 and Federal
Register Notice 5-22-95

APPLICATION FOR TRANSPORTATION AND UTILITY SYSTEMS AND FACILITIES ON FEDERAL LANDS

FORM APPROVED
OMB NO. 1004-0189
Expires: October 31, 2005

NOTE: Before completing and filing the application, the applicant should completely review this package and schedule a preapplication meeting with representatives of the agency responsible for processing the application. Each agency may have specific and unique requirements to be met in preparing and processing the application. Many times, with the help of the agency representative, the application can be completed at the preapplication meeting.

FOR AGENCY USE ONLY
Application Number
Date filed

1. Name and address of applicant *(include zip code)*

Central Appalachia Mining LLC
P.O. Box 98
Loma, CO 81524

2. Name, title, and address of authorized agent if different from Item 1 *(include zip code)*

3. TELEPHONE *(area code)*
Applicant 970-858-3960
Authorized Agent

4. As applicant are you? *(check one)*
   a. ☐ Individual
   b. ☒ Corporation*
   c. ☐ Partnership/Association*
   d. ☐ State Government/State Agency
   e. ☐ Local Government
   f. ☐ Federal Agency

   * *If checked, complete supplemental page*

5. Specify what application is for: *(check one)*
   a. ☒ New authorization
   b. ☐ Renewing existing authorization No.
   c. ☐ Amend existing authorization No.
   d. ☐ Assign existing authorization No.
   e. ☐ Existing use for which no authorization has been received*
   f. ☐ Other*

   * *If checked, provide details under Item 7*

6. If an individual, or partnership are you a citizen(s) of the United States? ☒ Yes ☐ No

7. Project description *(describe in detail)*: (a) Type of system or facility, *(e.g., canal, pipeline, road)*; (b) related structures and facilities; (c) physical specifications *(length, width, grading, etc.)*; (d) term of years needed; (e) time of year of use or operation; (f) Volume or amount of product to be transported; (g) duration and timing of construction; and (h) temporary work areas needed for construction *(Attach additional sheets, if additional space is needed.)*

See attached narrative, Appendix A.

8. Attach a map covering area and show location of project proposal Figure 1 is attached.

9. State or local government approval: ☐ Attached ☐ Applied for ☒ Not required

10. Nonreturnable application fee: ☒ Attached ☐ Not required

11. Does project cross international boundary or affect international waterways? ☐ Yes ☒ No *(If "yes," indicate on map)*

12. Give statement of your technical and financial capability to construct, operate, maintain, and terminate system for which authorization is being requested.

Central Appalachia Mining, LLC, "CAM" is engaged in the business of mining and selling coal. CAM will provide bond(s) required by the Division of Minerals and Geology and Bureau of Land Management to reclaim the facilities constructed within the right-of-way. CAM employs the technical knowledge to operate the mine facilities, coal preparation plant, coal mine waste disposal area and unit train loadout.

(Continued on page 2)

This form is authorized for local reproduction.

13a. Describe other reasonable alternative routes and modes considered.

See Appendix B.

b. Why were these alternatives not selected?

See Appendix B.

c. Give explanation as to why it is necessary to cross Federal Lands.

The coal lease and surrounding area are located on lands managed by the Bureau of Land Management. Private land in the immediate area is sparse.

14. List authorizations and pending applications filed for similar projects which may provide information to the authorizing agency. *(Specify number, date, code, or name)*

1. COC36761, right-of-way for 0.606 acres of transmission powerline.
2. COC30962, right-of-way for 2.06 acres of road in Munger Canyon.
3. COC67981, right-of-way for 42,240 feet of access road which contain 19.4 acres more or less.

15. Provide statement of need for project, including the economic feasibility and items such as: (a) cost of proposal *(construction, operation, and maintenance)*; (b) estimated cost of next best alternative; and (c) expected public benefits.

See Appendix C.

16. Describe probable effects on the population in the area, including the social and economic aspects, and the rural lifestyles.

See Appendix D.

17. Describe likely environmental effects that the proposed project will have on: (a) air quality; (b) visual impact; (c) surface and ground water quality and quantity; (d) the control or structural change on any stream or other body of water; (e) existing noise levels; and (f) the surface of the land, including vegetation, permafrost, soil, and soil stability.

See Appendix E.

18. Describe the probable effects that the proposed project will have on (a) populations of fish, plantlife, wildlife, and marine life, including threatened and endangered species; and (b) marine mammals, including hunting, capturing, collecting, or killing these animals.

Use of the right-of-way will not affect fish, plant life, wildlife, marine life or threatened and endangered species. The use will have no effect on marine mammals since none are present.

19. State whether any hazardous material, as defined in this paragraph, will be used, produced, transported or stored on or within the right-of-way or any of the right-of-way facilities, or used in the construction, operation, maintenance or termination of the right-of-way or any of its facilities. "Hazardous material" means any substance, pollutant or contaminant that is listed as hazardous under the Comprehensive Environmental Response, Compensation, and Liability Act of 1980, as amended, 42 U.S.C. 9601 et seq., and its regulations. The definition of hazardous substances under CERCLA includes any "hazardous waste" as defined in the Resource Conservation and Recovery Act of 1976 (RCRA), as amended, 42 U.S.C. 9601 et seq., and its regulations. The term hazardous materials also includes any nuclear or byproduct material as defined by the Atomic Energy Act of 1954, as amended, 42 U.S.C. 2011 et seq. The term does not include petroleum, including crude oil or any fraction thereof that is not otherwise specifically listed or designated as a hazardous substance under CERCLA Section 101(14), 42 U.S.C. 9601(14), nor does the term include natural gas.

No hazardous material, as defined above, will be used, produced, transported or stored on or within the right-of-way or any of the right-of-way facilities, or used in the construction, operation, maintenance or termination of the right- of-way or any of its facilities.

20. Name all the Department(s)/Agency(ies) where this application is being filed.

1. Bureau of Land Management

I HEREBY CERTIFY, That I am of legal age and authorized to do business in the State and that I have personally examined the information contained in the application and believe that the information submitted is correct to the best of my knowledge.

Signature of Applicant Walter Whitlege, Mine Manager | Date 9/27/05

Title 18, U.S.C. Section 1001 and Title 43 U.S.C. Section 1212, make it a crime for any person knowingly and willfully to make to any department or agency of the United States any false, fictitious, or fraudulent statements or representations as to any matter within its jurisdiction.

(Continued on page 3)

APPLICATION FOR TRANSPORTATION AND UTILITY SYSTEMS AND FACILITIES ON FEDERAL LANDS

GENERAL INFORMATION

ALASKA NATIONAL INTEREST LANDS

This application will be used when applying for a right-of-way, permit, license, lease, or certificate for the use of Federal lands which lie within conservation system units and National Recreation or Conservation Areas as defined in the Alaska National Interest Lands Conservation Act. Conservation system units include the National Park System, National Wildlife Refuge System, National Wild and Scenic Rivers System, National Trails System, National Wilderness Preservation System, and National Forest Monuments.

Transportation and utility systems and facility uses for which the application may be used are:

1. Canals, ditches, flumes, laterals, pipes, pipelines, tunnels, and other systems for the transportation of water.
2. Pipelines and other systems for the transportation of liquids other than water, including oil, natural gas, synthetic liquid and gaseous fuels, and any refined product produced therefrom.
3. Pipelines, slurry and emulsion systems, and conveyor belts for transportation of solid materials.
4. Systems for the transmission and distribution of electric energy.
5. Systems for transmission or reception of radio, television, telephone, telegraph, and other electronic signals, and other means of communications.
6. Improved rights-of-way for snow machines, air cushion vehicles, and all-terrain vehicles.
7. Roads, highways, railroads, tunnels, tramways, airports, landing strips, docks, and other systems of general transportation.

This application **must** be filed simultaneously with each Federal department or agency requiring authorization to establish and operate your proposal.

In Alaska, the following agencies will help the applicant file an application and identify the other agencies the applicant should contact and possibly file with:

Department of Agriculture
Regional Forester, Forest Service (USFS)
Federal Office Building, P.O. Box 21628
Juneau, Alaska 99802-1628
Telephone: (907) 586-7847 *(or a local Forest Service Office)*

Department of the Interior
Bureau of Indian Affairs (BIA)
Juneau Area Office
9109 Mendenhall Mall Road, Suite 5, Federal Building Annex
Juneau, Alaska 99802
Telephone: (907) 586-7177

Bureau of Land Management (BLM)
222 West 7th Ave., Box 13
Anchorage, Alaska 99513-7599
Telephone: (907) 271-5477 *(or a local BLM Office)*

National Park Service (NPS)
Alaska Regional Office, 2525 Gambell St., Rm. 107
Anchorage, Alaska 99503-2892
Telephone: (907) 257-2585

U.S. Fish & Wildlife Service (FWS)
Office of the Regional Director
1011 East Tudor Road
Anchorage, Alaska 99503
Telephone: (907) 786-3440

Note-Filings with any Interior agency may be filed with any office noted above or with the: Office of the Secretary of the Interior, Regional Environmental Officer, Box 120, 1675 C Street, Anchorage, Alaska 99513.

(For supplemental, see page 4)

Department of Transportation
Federal Aviation Administration
Alaska Region AAL-4, 222 West 7th Ave., Box 14
Anchorage, Alaska 99513-7587
Telephone: (907) 271-5285

NOTE - The Department of Transportation has established the above central filing point for agencies within that Department. Affected agencies are: Federal Aviation Administration (FAA), Coast Guard (USCG), Federal Highway Administration (FHWA), Federal Railroad Administration (FRA).

OTHER THAN ALASKA NATIONAL INTEREST LANDS

Use of this form is not limited to National Interest Conservation Lands of Alaska.

Individual departments/agencies may authorize the use of this form by applicants for transportation and utility systems and facilities on other Federal lands outside those areas described above.

For proposals located outside of Alaska, applications will be filed at the local agency office or at a location specified by the responsible Federal agency.

SPECIFIC INSTRUCTIONS

(Items not listed are self-explanatory)

Item

7 Attach preliminary site and facility construction plans. The responsible agency will provide instructions whenever specific plans are required.

8 Generally, the map **must** show the section(s), township(s), and range(s) within which the project is to be located. Show the proposed location of the project on the map as accurately as possible. Some agencies require detailed survey maps. The responsible agency will provide additional instructions.

9, 10, and 12 - The responsible agency will provide additional instructions.

13 Providing information on alternate routes and modes in as much detail as possible, discussing why certain routes or modes were rejected and why it is necessary to cross Federal lands will assist the agency(ies) in processing your application and reaching a final decision. Include only reasonable alternate routes and modes as related to current technology and economics.

14 The responsible agency will provide instructions.

15 Generally, a simple statement of the purpose of the proposal will be sufficient. However, major proposals located in critical or sensitive areas may require a full analysis with additional specific information. The responsible agency will provide additional instructions.

16 through 19 - Providing this information in as much detail as possible will assist the Federal agency(ies) in processing the application and reaching a decision. When completing these items, you should use a sound judgment in furnishing relevant information. For example, if the project is not near a stream or other body of water, **do not** address this subject. The responsible agency will provide additional instructions.

Application **must** be signed by the applicant or applicant's authorized representative.

If additional space is needed to complete any item, please put the information on a separate sheet of paper and identify it as "Continuation of Item".

SUPPLEMENTAL

NOTE: The responsible agency(ies) will provide additional instructions

	CHECK APPROPRIATE BLOCK	
I - PRIVATE CORPORATIONS	ATTACHED	FILED*
a. Articles of Incorporation	☒	☐
b. Corporation Bylaws Central Appalachia Mining, LLC, does not have Corporation Bylaws	☐	☐
c. A certification from the State showing the corporation is in good standing and is entitled to operate within the State.	☒	☐
d. Copy of resolution authorizing filing	☒	☐
e. The name and address of each shareholder owning 3 percent or more of the shares, together with the number and percentage of any class of voting shares of the entity which such shareholder is authorized to vote and the name and address of each affiliate of the entity together with, in the case of an affiliate controlled by the entity, the number of shares and the percentage of any class of voting stock of that affiliate owned, directly or indirectly, by that entity, and in the case of an affiliate which controls that entity, the number of shares and the percentage of any class of voting stock of that entity owned, directly or indirectly, by the affiliate.	☒	☐
f. If application is for an oil or gas pipeline, describe any related right-of-way or temporary use permit applications, and identify previous applications.	☐	☐
g. If application is for an oil and gas pipeline, identify all Federal lands by agency impacted by proposal.	☐	☐
II - PUBLIC CORPORATIONS		
a. Copy of law forming corporation	☐	☐
b. Proof of organization	☐	☐
c. Copy of Bylaws	☐	☐
d. Copy of resolution authorizing filing	☐	☐
e. If application is for an oil or gas pipeline, provide information required by Item "I-f" and "I-g" above.	☐	☐
III - PARTNERSHIP OR OTHER UNINCORPORATED ENTITY		
a. Articles of association, if any	☐	☐
b. If one partner is authorized to sign, resolution authorizing action is	☐	☐
c. Name and address of each participant, partner, association, or other	☐	☐
d. If application is for an oil or gas pipeline, provide information required by Item "I-f" and "I-g" above.	☐	☐

* If the required information is already filed with the agency processing this application and is current, check block entitled "Filed." Provide the file identification information *(e.g., number, date, code, name)*. If not on file or current, attach the requested information.

The Paperwork Reduction Act of 1995 requires us to inform you that:

The Federal agencies collect this information from applicants requesting right-of-way, permit, license, lease, or certifications for the use of Federal lands.

Federal agencies use this information to evaluate your proposal.

No Federal agency may request or sponsor, and you are not required to respond to a request for information which does not contain a currently valid OMB Control Number.

BURDEN HOURS STATEMENT

The public burden for this form is estimated at 25 hours per response including the time for reviewing instructions, gathering and maintaining data, and completing and reviewing the form. Direct comments regarding the burden estimate or any other aspect of this form to: U.S. Department of the Interior, Bureau of Land Management (1004-0189), Bureau Information Collection Clearance Officer (WO-630), 1849 C Street, N.W., Mail Stop 401LS, Washington, D.C. 20240

A reproducible copy of this form may be obtained from the Bureau of Land Management, Land and Realty Group, 1620 L Street, N.W., Rm. 1000LS, Washington, D.C. 20036.

(Continued on page 5)

NOTICE

NOTE: This applies to the Department of the Interior/Bureau of Land Management (BLM).

The Privacy Act of 1974 provides that you be furnished with the following information in connection with the information provided by this application for an authorization.

AUTHORITY: 16 U.S.C. 310 and 5 U.S.C. 301.

PRINCIPAL PURPOSE: The primary uses of the records are to facilitate the (1) processing of claims or applications; (2) recordation of adjudicative actions; and (3) indexing of documentation in case files supporting administrative actions.

ROUTINE USES: BLM and the Department of the Interior (DOI) may disclose your information on this form: (1) to appropriate Federal agencies when concurrence or supporting information is required prior to granting or acquiring a right or interest in lands or resources; (2) to members or the public who have a need for the information that is maintained by BLM for public record; (3) to the U.S. Department of Justice, court, or other adjudicative body when DOI determines the information is necessary and relevant to litigation; (4) to appropriate Federal, State, local, or foreign agencies responsible for investigating, prosecuting violation, enforcing, or implementing this statute, regulation, or order; and (5) to a congressional office when you request the assistance of the Member of Congress in writing.

EFFECT OF NOT PROVIDING THE INFORMATION: Disclosing this information is necessary to receive or maintain a benefit. Not disclosing it may result in rejecting the application.

APPENDIX A

CENTRAL APPALACHIA MINING, LLC
Right-of-Way Application
Appendix A

Project Description

Central Appalachia Mining, LLC, is proposing new portals and associated facilities to extract coal from Federal Coal Leases C-0125515, C-0125516 and C-0125439. The Federal Coal Leases and a small amount of private coal comprise logical mining unit COC-57198. The new portals will be located on Federal Coal Lease C-0125516 in the south half of Section 3, Township 8 South, Range 102 West, 6th P.M.

The portals, ventilation fan, office, shop, raw coal stockpile and numerous support facilities will be located within the coal lease boundary. Other facilities will be located on land managed by the Bureau of Land Management for with a right of way will be required. Those facilities include **(7(a))** railroad tracks, maintenance road, water pipeline, access road, conveyors and overhead power line(s). Related structures **(7(b))** include coal stockpiles, unit train loadout, coal preparation plant and a coal mine waste disposal area (refuse pile). The facilities to be located within the proposed right-of-way are shown on Figure 1.

Underground mining will be conducted at the mine in the Cameo Seam by both room and pillar and longwall mining techniques. Conventional room and pillar mining will utilize continuous miners and shuttle cars with belt haulage. Longwall gate entries and bleeders will be developed with continuous miners and shuttle cars. Retreat mining is conducted to attain the maximum recovery consistent with the safety and protection of mine personnel and surface protection. The production rate at the mine will be controlled by market conditions. The minimum production rate will be about 2.0 million tons per year with an expected maximum production of 6.0 million tons per year.

Five or more entries will be used to access the coal reserve. Entry spacing will range from a minimum of 50-feet to a maximum of 120-feet. Room and pillar panels will be developed off main and submain entries with barrier pillars left for protection. Partial pillar recovery of all workings and barrier pillars will go on to the extent allowed by safe mining and surface protection concerns.

Main entries will be developed in an easterly direction. Submains will be extended both northerly. Panels will be driven at ≈90 degrees from the submain entries. Each set of panels will be separated from the adjacent panels and submains by barrier pillars.

Longwall mining faces will be developed as long as possible and 800 to 1,000 feet wide. Gate entries will typically be developed with three entries with pillar spacing and size

designed to provide maximum support for ventilation and belt haulage. Bleeder entries will be developed with four or more entries.

The proposed surface facilities to be located within the proposed right-of-way and coal lease boundary include (7(c)):

1. Railroad
2. Maintenance Road
3. Water Pipeline
4. Coal Storage Piles
5. Unit Train Loadout
6. Coal Preparation Plant
7. Mine Access Roads
8. Construction Roads and Storage Areas
9. Benches for Mine Facilities
10. Coal Mine Waste Disposal Area (Refuse Pile)
11. Sediment Ponds and Ditches
12. Conveyors
13. Utility Corridor

A physical description of the facilities follows (7(c)).

1. Railroad

The railroad track located on BLM managed land is approximately 9.5 miles long. The roadbed width is 24 feet. Fill slopes will be 2H:1V unless conditions warrant flatter slopes. Cut slopes will be not less than 1.5H:1V in common material with steeper slopes allowable in rock cuts. Culverts will be installed under the tracks at the location of each ephemeral channel. The tracks cross state highway 139.

2. Maintenance Road

A 12 foot wide maintenance road will parallel the railroad track.

3. Water Pipeline

A water pipeline will be buried along the alignment of the maintenance road and will extend to the mine portals. This pipeline will supply all of the water needs for the mine operation.

4. Coal Storage Piles

Coal is stored in one of two open stockpiles. The coal storage piles are; 1) run-of-mine and 2) clean coal. Up to 100,000 tons will be stored in the run of mine pile which is located within the coal lease boundary. The clean coal stockpile is located near the unit train loadout. Up to 350,000 tons of coal will be stored in the clean coal stockpile. Stacking

tubes are used to transfer coal into the stockpiles in order to minimize segregation and air particulate emissions. Stacking tubes are 80 to 100-feet high and 10 to 12-feet in diameter. They have numerous evenly spaced 4 foot square openings to allow coal to flow from the tube to the stockpiles.

5. Unit Train Loadout

The unit train loadout is comprised of a reclaim tunnel, conveyor belt(s) and loadout tower. The reclaim tunnel is located under the clean coal storage pile. It will be constructed of reinforced concrete or steel multi-plate. The typical inside dimensions of a reclaim tunnel are 13 feet high by 12 feet wide. Vibratory feeders in the reclaim tunnel transfer clean coal onto the conveyor belt(s) at a rate of 6,000 tons per hour. Coal is conveyed directly to the loadout structure. The coal is batch weighed and loaded into rail cars at this location. The dimensions of the loadout structure will be approximately 30 feet by 40 feet by 120 feet high.

6. Coal Preparation Plant

The preparation plant will be a structural steel building where coal and rock are separated with heavy media circuits. The plant is a closed system. All water is treated in a thickener and returned to the plant. No water is discharged. The thickener is a concrete structure where water is cleaned and returned to the wash plant. The tank is approximately 70 feet in diameter and 10 feet high. The coal preparation plant structure is approximately 55 feet by 140 feet by 80 feet high. A refuse bin may be utilized to hold surges in refuse production from the coal preparation plant and will load refuse haul trucks. The refuse bin will be constructed of structural steel approximately 20 feet by 20 feet by 60 feet high.

7. Mine Access Roads

Access roads are typically 20 to 24 feet wide with an earth berm or guardrail on the outside slope and a drainage ditch on the inside. The access roads will be plated with gravel surfacing or will be paved. Haul roads are watered and cleaned as necessary to control fugitive emissions. Chemical dust suppression may also be used on heavily traveled roads to control air pollution. The main mine access road will provide a travel way for mine personnel, supplies and equipment. The roads provide access to the unit train loadout, preparation plant, refuse pile and the mine portals.

8. Construction Roads and Construction Storage Areas

There are numerous existing roads and trails along the alignment of the proposed railroad that will be upgraded and used for construction personnel, equipment and supplies. The roads will provide convenient but necessary points of access to the railroad corridor. Construction storage areas are outlined along the railroad corridor so the contractor will have ample room for equipment, supplies and material storage. The construction roads and construction storage areas will be reclaimed in accordance with Bureau of Land Management requirements as soon as the railroad construction is complete.

9. Benches for Mine Facilities

The upper mine facilities located within the coal lease boundary include benches and related access roads. Benches are carved out of the steep terrain to provide relatively flat surfaces for the mine facilities. Most benches are constructed by excavating the steep slopes and filling ephemeral drainages. The first or upper bench is a utility bench for a water tank. The second bench or portal bench is developed for a shop, warehouse, raw coal stockpile, reclaim tunnel and other facilities. The third bench or material bench is for material storage and parking. The fourth bench is the office/bathhouse bench.

The facilities located outside of the coal lease boundary will also be constructed on benches. There will be a coal preparation plant bench and unit train loadout bench.

10. Coal Mine Waste Disposal Area (Refuse Pile)

Nearly all of the coal mine waste disposal area is located outside of the coal lease boundary. Coal mine waste is generated by the coal wash plant and by roof falls in the underground mine. The coal mine waste material will be hauled by conveyor and truck to the disposal area. Coal mine waste will be placed and compacted to 90 percent of the maximum dry density to prevent spontaneous combustion and to provide the strength required for stability of the refuse pile. Dry densities will be determined in accordance with AASHTO T99-74. The placing and spreading of the coal mine waste will be started at the lowest point of the foundation. The coal mine waste will be keyed into the natural ground. Materials will be spread in approximately horizontal lifts no more than 24-inches thick, and such lifts made uniformly over long stretches. Each lift will be moistened or dried to a uniform moisture content suitable for maximum compaction. Compaction will be carried to the edge of the fills so that the final slopes are firm. Slopes will be no steeper than 2.5H:1V with 15 foot wide terraces on 50 foot vertical intervals.

11. Sediment Ponds and Ditches

Sediment ponds are designed is to provide adequate capacity to contain or treat the run-off or inflow entering the pond as a result of a 10-year, 24-hour precipitation event and any additional storage resulting from the inflow from the underground mine. Sediment ponds, diversion and collection ditches will be constructed on and off the coal lease boundary. A sediment pond will required near the coal wash plant, unit train loadout and coal mine waste disposal area. Ditches will be designed to direct disturbed area run off to the sediment ponds and in some cases divert undisturbed area run off away from the sediment ponds. Sediment ponds and ditches will be constructed on the coal lease boundary to collect and treat disturbed area run off.

12. Conveyors

The portal conveyor is an extension of the conveyor from within mine. This 72 inch wide conveyor extends from the portal to the portal transfer building. A 48 inch wide refuse belt

will convey refuse from the portal transfer building to the temporary gob pile. A 72 inch wide stockpile conveyor will transfer coal from the portal transfer tower to the stacking tube and raw coal stockpile. A reclaim conveyor will transfer coal from the coal stockpile to the wash pant which is located off of the coal lease boundary. A 48-inch wide clean coal belt will deliver coal to the stacking tubes and clean coal loadout stockpile. A 72 inch wide loadout belt will feed coal to the unit train loadout. A 48-inch wide refuse belt will send coal to the gob bin and the coal mine waste disposal area.

13. Utility Corridor

A utility corridor will be constructed to provide a cleared route for a power and water line.

Following is a discussion of the proposed mine facilities:

Portal Conveyor Transfer Buildings
The portal conveyor transfer building is a structural steel building where the main belt from the mine terminates. The coal from the mine will transfer to the stockpile conveyor. Gob conveyed from the mine will be transferred to the gob belt. The dimensions of the building will be approximately 20 feet by 24 feet by 45 feet high.

Fuel Oil Storage Fueling Stations
A concrete and steel structure located at the portal level to contain gasoline, fuel and oil tanks. The structure will be approximately 20 feet by 30 feet long. The containment area is constructed of 6 to 8-inch thick walls two to four feet high. The three sided steel structure rests on the concrete containment and is approximately 20 feet high.

Substations
Gravel surfaced fenced areas to secure electrical transformers. Substations will be located where necessary to provide electrical power to the mine facilities. The outside dimensions of a typical facility are 50-feet by 50 feet. A substation contains electrical transformers to reduce the line power to a suitable voltage.

Dry/Office
A pre-engineered metal building to be used for a bath house and offices. The two story building will be approximately 120 feet by 50 feet with a 24 foot eave height.

Material Storage Areas
Open areas to store materials. Materials to be stored include roof bolts, roof pans, timbers, caps, wedges, hoses, pipe, pipe supplies, electrical equipment, electrical cable, electrical supplies, conveyor belt, conveyor components, motors, gear boxes, mine equipment, mine equipment components, surface equipment, surface equipment components, rock dust, gravel, masonry block, masonry supplies, sealant, foam and tools.

Shop
A pre-engineered metal building to store supplies and to repair and fabricate equipment. The building will be approximately 100 feet by 50 feet with a 24 foot eave height.

Warehouse
A pre-engineered metal building approximately 50 feet by 60 feet with a 24 foot eave height.

Washbay
A pre-engineered metal building approximately 50 feet by 25 feet with 24 foot eave height.

Covered Storage
Three sided pre-engineered metal buildings approximately 30 feet by 80 feet with a 20 foot eave height.

Sewage Treatment Plant
A package sewage treatment plant. The building is approximately 20 foot by 30 foot with a 10 foot eave height.

Water Tank
A water tank located on the utility level which is above the portal level. The fabricated steel tank is constructed on a concrete or oiled sand base. The tank will be approximately 52 feet in diameter and 32 feet high which provides a capacity of approximately 500,000 gallons. A smaller water tank will also be constructed near the coal wash plant.

Water Treatment Building
This pre-engineered metal building will be approximately 14 feet by 20 feet with a 12 foot eave height.

Mine Vent Fan
A mine ventilation fan and steel duct work located at the return entry. The ventilation fan is approximately 8-feet in diameter.

Power Line
A high voltage overhead power line will be extended to the portal area substation.

Non-Coal Waste Storage
Non-coal waste will be stored at various locations around the site in commercially available dumpsters.

Rock Dust Storage

Steel rock dust silos approximately 50 feet high and 8 feet in diameter.

Pump House

A pre-engineered metal building designed to house the pump station which supplies water to the mine operation. The building is approximately 18 feet by 12 feet with an 8-foot eave height.

Conveyor Transfer Buildings

The conveyor transfer buildings are steel buildings where the belts make a turn. The dimensions of the buildings are approximately 16 feet by 16 feet by 30 feet high.

Construction of the facilities within the right-of-way will take approximately two years **(7(g))**. The facilities will be used 24 hours per day, 7 days per week, 365 days per year **(7(e))**. The term of the right-of-way should be at least 30 years **(7(d))**. Approximately 10 million tons per year will be conveyed from the mine portals and processed by the coal preparation plant. Six million tons will be loaded into rail cars and shipped to the coal consumer. Four million tons will be rejected by the preparation plant and transported to the coal mine waste disposal area **(7(f))**. Temporary work areas are shown on Figure 1**(7(h))**.

APPENDIX B

Right-of-Way Application
Appendix B

a. Other reasonable alternative routes and modes considered – The coal could be hauled from the mine portals via truck. At 6.0 million tons per year, 480,000 truck trips per year would pass through the local communities. A unit train loadout would still have to be constructed on private land near the railroad main line. The coal mine waste disposal area could be located in a remote are within the existing coal lease boundary. Alternative routes could be selected for the rail spur.

b. Truck haulage was discounted because of the impact it would have on the road infrastructure and the local community. Moving the coal mine waste disposal site to a remote area was discounted because it would be cost prohibitive. The route selected for the rail spur is believed to have the least impact to local residents and on the environment.

APPENDIX C

Right-of-Way Application
Appendix C

Statement of need for the project:

Coal exploration drilling performed during 2004 proved there were significant coal reserves in the southern portion of the Federal coal lease. Additionally, drilling work performed by others in the surrounding area indicates there are significant coal reserves in the adjacent area. The project will provide for the construction of an efficient infrastructure to extract the valuable coal reserves.

a. Cost of proposal – The construction cost of the entire project is about 163 million dollars. The cost to operate the facilities will be 3 to 5 dollars per ton, excluding the cost of mining the coal. At a production rate of 6 million tons per year, the cost to operate the facility will be 18 to 30 million dollars per year.
b. Estimated cost of next best alternative – The next be alternative would be to truck the coal to a remote wash plant and unit train loading facility and haul the coal mine waste to a remote site. The construction cost would be about 40 million dollars. The cost to operate the remote facilities would be 3 to 5 dollars per ton plus a trucking cost of 5 to 10 dollars per ton. At a production rate of 6 million tons per year, the cost to operate the facility would be 48 to 90 million dollars per year.

APPENDIX D

Company Facts

- Formed early 2003 by Wexford Capital LLC
- Controls approximately 440 million tons of recoverable coal in seven states
  - Kentucky/Southern West Virginia: 142mm tons
  - Central West Virginia: 40mm tons
  - Ohio/Pennsylvania: 90mm tons
  - Illinois: 120mm tons
  - Colorado: 48mm tons
- Currently employs 25 at the McClane Canyon Mine

Estimated Financial Impacts Of Expansion

(all figures are cumulative for the first five years of the expansion unless noted)

Estimated Average Annual Wage per Employee:	$58,759 per year
Estimated Total Direct Payroll at Facility	$43,072,545
Total Economic Benefit to City	$78,627,644
Total Public Revenue to City	$2,531,440
Total Direct & Secondary Economic Benefits to County	$140,960,908
Total Direct Public Revenue to County	$5,553,810
Total Direct & Secondary Economic Benefits to State	$191,224,272
Total Direct Public Revenue to Colorado	$6,349,101
City School Districts, total public revenue	$9,406,187
County School Districts, total public revenue	$9,683,448

Summary of Project Returns
Analysis

CAM Holdings LLC

TOTAL COUNTY INCENTIVES		
	$0	Construction period
	$0	Operations (years 1 - 5)
	$0	Total
Total Economic Benefits to County	$106,713,372	
Total Public Revenue to County	$5,402,560	

PAYBACK PERIOD FOR INITIAL COUNTY PUBLIC COST OF:	$0	
	1 year period of construction	
Total Economic Benefits to County	N/A	years
Total Public Revenue to County	N/A	years

RETURN ON INVESTMENT		
Total Economic Benefits		
Year One	N/A	Benefit received by the county for each dollar invested
Cumulative Years (1 - 5)	$299.43	Cumulative benefit for each dollar invested over five years
Total Public Revenue		
Year One	N/A	Public revenue received by the county for each dollar invested
Cumulative Years (1 - 5)	$15.16	Cumulative public revenue for each dollar invested over five years

NET PRESENT VALUE (NPV) ANALYSIS

Discount Rate	Net Economic Benefits (Costs) NPV	Net Public Revenue (Costs) NPV
7.0%	$83,340,825	$3,852,038
8.0%	$80,708,164	$3,714,290
9.0%	$78,208,611	$3,583,276
10.0%	$75,833,791	$3,458,592

MODIFIED INTERNAL RATE OF RETURN (MIRR) ANALYSIS

Reinvestment Rate: 0.0%

Discount Rate	Total Economic Benefits (Costs) MIRR	Total Public Revenue (Costs) MIRR
7.0%	#DIV/0!	#DIV/0!
8.0%	#DIV/0!	#DIV/0!
9.0%	#DIV/0!	#DIV/0!
10.0%	#DIV/0!	#DIV/0!

Summary of Project Returns
Analysis

CAM Holdings LLC

TOTAL CITY INCENTIVES

	$0	Construction period
	$0	Operations (years 1 - 5)
	$0	Total
Total Economic Benefits to City	$63,822,120	
Total Public Revenue to City	$2,389,012	

PAYBACK PERIOD FOR INITIAL CITY PUBLIC COST OF: $0

1 year period of construction

Total Economic Benefits to City	N/A years
Total Public Revenue to City	N/A years

RETURN ON INVESTMENT

Total Economic Benefits		
Year One	N/A	Benefit received by the city for each dollar invested
Cumulative Years (1 - 5)	$39.01	Cumulative benefit for each dollar invested over five years
Total Public Revenue		
Year One	N/A	Public revenue received by the city for each dollar invested
Cumulative Years (1 - 5)	$1.46	Cumulative public revenue for each dollar invested over five years

NET PRESENT VALUE (NPV) ANALYSIS

Discount Rate	Net Economic Benefits (Costs) NPV	Net Public Revenue (Costs) NPV
7.0%	$51,248,606	$627,244
8.0%	$49,977,392	$611,694
9.0%	$48,765,672	$596,676
10.0%	$47,609,803	$582,169

MODIFIED INTERNAL RATE OF RETURN (MIRR) ANALYSIS

Reinvestment Rate: 0.0%

Discount Rate	Total Economic Benefits (Costs) MIRR	Total Public Revenue (Costs) MIRR
7.0%	#DIV/0!	#DIV/0!
8.0%	#DIV/0!	#DIV/0!
9.0%	#DIV/0!	#DIV/0!
10.0%	#DIV/0!	#DIV/0!

Summary of Project Returns
Analysis

CAM Holdings LLC

TOTAL COLORADO INCENTIVES

	$0 Construction period
	$0 Operations (years 1 - 5)
	$0 Total
Total Economic Benefits to Colorado	$152,094,254
Total Public Revenue to Colorado	$5,577,404

PAYBACK PERIOD FOR INITIAL COLORADO PUBLIC COST: $0

1 year period of construction

Total Economic Benefits to Colorado	N/A years
Total Public Revenue to Colorado	N/A years

RETURN ON INVESTMENT

Total Economic Benefits	
Year One	N/A Benefit received by Colorado for each dollar invested
Cumulative Years (1 - 5)	N/A Cumulative benefit for each dollar invested over five years
Total Public Revenue	
Year One	N/A Public revenue received by Colorado for each dollar invested
Cumulative Years (1 - 5)	N/A Cumulative public revenue for each dollar invested over five years

NET PRESENT VALUE (NPV) ANALYSIS

Discount Rate	Net Economic Benefits (Costs) NPV	Net Public Revenue (Costs) NPV
7.0%	$124,698,599	$4,868,980
8.0%	$121,524,438	$4,784,128
9.0%	$118,501,052	$4,702,655
10.0%	$115,619,136	$4,624,367

MODIFIED INTERNAL RATE OF RETURN (MIRR) ANALYSIS

Reinvestment Rate: 0.0%

Discount Rate	Total Economic Benefits (Costs) MIRR	Total Public Revenue (Costs) MIRR
7.0%	#DIV/0!	#DIV/0!
8.0%	#DIV/0!	#DIV/0!
9.0%	#DIV/0!	#DIV/0!
10.0%	#DIV/0!	#DIV/0!

APPENDIX E

Right-of-Way Application
Appendix E

Environmental Affects

a. Air Quality – Air quality permits will be obtained before construction and operation of the proposed facilities are initiated. The air permits will require appropriate emission control techniques. All gravel roads will be watered as necessary to control fugitive emissions or will be treated with a surface surfactant. Conveyor transfer points will be partially enclosed and water sprays will be utilized. Stacking tubes will be utilized to reduce the drop height of the coal. Coal stockpiles will be watered as necessary.

b. Visual Impact – The coal mine portals will be constructed in a deeply incised canyon that should not be visible from State Highway 139. Portions of the coal mine will be visible from State Highway 139. Coal stockpiles and the coal mine waste disposal area will be visible. The preparation plant and train loading facility may also be visible. Portions of the mine access road and rail will be visible.

c. Surface and ground water quality and quantity – Surface run-off from the majority of the area disturbed by the facilities will be collected in sediment ponds. A typical sediment pond is capable of containing the run-off from a 10-year event with an emergency spillway system designed to handle the peak flow generated by the 25-year storm event. Sediment ponds are dewatered after the water is held a sufficient time to be clarified. Sediment ponds do not affect the quantity of surface water. Sediment ponds may actually improve the quality of surface water. Surface run-off that is not collected in a sediment pond will be filtered through a sediment trap such as a silt fence or straw bales. Mine water discharge could impact the surface drainage system by mixing mine water with surface water. Mine water is typically high in total dissolved solids (TDS) relative to surface water so mixing mine water with surface water would be expected to increase the TDS of the resultant mix. The facilities are to be constructed on Mancos shale. The quantity of ground water should not be affected by the mine facilities since there will not be any extraction of ground water. The quality of the ground water could be affected by surface infiltration of water that has been in contact with the coal stockpiles or coal mine waste disposal area. Like the mine water, water that has been in contact with coal stockpiles is typically high in total dissolved solids (TDS) relative to ground water so mixing mine water with surface water would be expected to increase the TDS of the resultant mix. However, surface and ground water in the facilities area has relatively high TDS so the impact from the facilities may be minimal to non-existent.

d. Control or structural change of any body of water – One or more stock ponds may be relocated to facilitate construction of the facilities.

e. Existing noise levels – The mining operation does generate a certain amount of noise. However, the operation is remote enough that the noise should not be a concern to the public. The train will generate noise that will be noticeable to the public. Approximately 3.3 train trips per day will travel the rail at the maximum projected production of 6.0 million tons per year.

f. The surface of the land including vegetation, soil and soil stability - Vegetation will be removed at the location of all of the facilities. Topsoil, to the extent possible, will be salvaged and placed in stockpiles for future revegetation use. The facilities will be designed so soil stability is achieved. Fill slopes will typically be 2H:1V. Cut slopes will typically be 1.5H:1V with steeper cut slopes allowed in rock.

Bureau of Land Management
Standard Coal Lease Form

Form 3400-12
(April 2007)

UNITED STATES
DEPARTMENT OF THE INTERIOR
BUREAU OF LAND MANAGEMENT

COAL LEASE

FORM APPROVED
OMB NO. 1004-0073
Expires: March 31, 2010

Serial Number

PART 1. LEASE RIGHTS GRANTED

This lease, entered into by and between the UNITED STATES OF AMERICA, hereinafter called lessor, through the Bureau of Land Management (BLM), and *(Name and Address)*

hereinafter called lessee, is effective *(date)* / / , for a period of 20 years and for so long thereafter as coal is produced in commercial quantities from the leased lands, subject to readjustment of lease terms at the end of the 20th lease year and each 10-year period thereafter.

Sec. 1. This lease is issued pursuant and subject to the terms and provisions of the:

☐ Mineral Lands Leasing Act of 1920, Act of February 25, 1920, as amended, 41 Stat. 437, 30 U.S.C. 181-287, hereinafter referred to as the Act;

☐ Mineral Leasing Act for Acquired Lands, Act of August 7, 1947, 61 Stat. 913, 30 U.S.C. 351-359;

and to the regulations and formal orders of the Secretary of the Interior which are now or hereafter in force, when not inconsistent with the express and specific provisions herein.

Sec. 2. Lessor, in consideration of any bonuses, rents, and royalties to be paid, and the conditions and covenants to be observed as herein set forth, hereby grants and leases to lessee the exclusive right and privilege to drill for, mine, extract, remove, or otherwise process and dispose of the coal deposits in, upon, or under the following described lands:

containing acres, more or less, together with the right to construct such works, buildings, plants, structures, equipment and appliances and the right to use such on-lease rights-of-way which may be necessary and convenient in the exercise of the rights and privileges granted, subject to the conditions herein provided.

PART II. TERMS AND CONDITIONS

Sec. 1. (a) RENTAL RATE -Lessee must pay lessor rental annually and in advance for each acre or fraction thereof during the continuance of the lease at the rate of $ for each lease year.

(b) RENTAL CREDITS -Rental will not be credited against either production or advance royalties for any year.

Sec. 2. (a) PRODUCTION ROYALTIES - The royalty will be percent of the value of the coal as set forth in the regulations. Royalties are due to lessor the final day of the month succeeding the calendar month in which the royalty obligation accrues.

(b) ADVANCE ROYALTIES - Upon request by the lessee, the BLM may accept, for a total of not more than 10 years, the payment of advance royalties in lieu of continued operation, consistent with the regulations. The advance royalty will be based on a percent of the value of a minimum number of tons determined in the manner established by the advance royalty regulations in effect at the time the lessee requests approval to pay advance royalties in lieu of continued operation.

Sec. 3. BONDS - Lessee must maintain in the proper office a lease bond in the amount of $. The BLM may require an increase in this amount when additional coverage is determined appropriate.

Sec. 4. DILIGENCE - This lease is subject to the conditions of diligent development and continued operation, except that these conditions are excused when operations under the lease are interrupted by strikes, the elements, or casualties not attributable to the lessee. The lessor, in the public interest, may suspend the condition of continued operation upon payment of advance royalties in accordance with the regulations in existence at the time of the suspension. Lessee's failure to produce coal in commercial quantities at the end of 10 years will terminate the lease. Lessee must submit an operation and reclamation plan pursuant to Section 7 of the Act not later than 3 years after lease issuance.

The lessor reserves the power to assent to or order the suspension of the terms and conditions of this lease in accordance with, inter alia, Section 39 of the Mineral Leasing Act, 30 U.S.C. 209.

5. LOGICAL MINING UNIT (LMU) - Either upon approval by the lessor of the lessee's application or at the direction of the lessor, this lease will become an LMU or part of an LMU, subject to the provisions set forth in the regulations.

The stipulations established in an LMU approval in effect at the time of LMU approval will supersede the relevant inconsistent terms of this lease so long as the lease remains committed to the LMU. If the LMU of which this lease is a part is dissolved, the lease will then be subject to the lease terms which would have been applied if the lease had not been included in an LMU.

(Continued on page 2)

Sec. 6. DOCUMENTS, EVIDENCE AND INSPECTION - At such times and in such form as lessor may prescribe, lessee must furnish detailed statements showing the amounts and quality of all products removed and sold from the lease, the proceeds therefrom, and the amount used for production purposes or unavoidably lost.

Lessee must keep open at all reasonable times for the inspection by BLM the leased premises and all surface and underground improvements, works, machinery, ore stockpiles, equipment, and all books, accounts, maps, and records relative to operations, surveys, or investigations on or under the leased lands.

Lessee must allow lessor access to and copying of documents reasonably necessary to verify lessee compliance with terms and conditions of the lease.

While this lease remains in effect, information obtained under this section will be closed to inspection by the public in accordance with the Freedom of Information Act (5 U.S.C. 552).

Sec. 7. DAMAGES TO PROPERTY AND CONDUCT OF OPERATIONS - Lessee must comply at its own expense with all reasonable orders of the Secretary, respecting diligent operations, prevention of waste, and protection of other resources.

Lessee must not conduct exploration operations, other than casual use, without an approved exploration plan. All exploration plans prior to the commencement of mining operations within an approved mining permit area must be submitted to the BLM.

Lessee must carry on all operations in accordance with approved methods and practices as provided in the operating regulations, having due regard for the prevention of injury to life, health, or property, and prevention of waste, damage or degradation to any land, air, water, cultural, biological, visual, and other resources, including mineral deposits and formations of mineral deposits not leased hereunder, and to other land uses or users. Lessee must take measures deemed necessary by lessor to accomplish the intent of this lease term. Such measures may include, but are not limited to, modification to proposed siting or design of facilities, timing of operations, and specification of interim and final reclamation procedures. Lessor reserves to itself the right to lease, sell, or otherwise dispose of the surface or other mineral deposits in the lands and the right to continue existing uses and to authorize future uses upon or in the leased lands, including issuing leases for mineral deposits not covered hereunder and approving easements or rights-of-way. Lessor must condition such uses to prevent unnecessary or unreasonable interference with rights of lessee as may be consistent with concepts of multiple use and multiple mineral development.

Sec. 8. PROTECTION OF DIVERSE INTERESTS, AND EQUAL OPPORTUNITY - Lessee must: pay when due all taxes legally assessed and levied under the laws of the State or the United States; accord all employees complete freedom of purchase; pay all wages at least twice each month in lawful money of the United States; maintain a safe working environment in accordance with standard industry practices; restrict the workday to not more than 8 hours in any one day for underground workers, except in emergencies; and take measures necessary to protect the health and safety of the public. No person under the age of 16 years should be employed in any mine below the surface. To the extent that laws of the State in which the lands are situated are more restrictive than the provisions in this paragraph, then the State laws apply.

Lessee will comply with all provisions of Executive Order No. 11246 of September 24, 1965, as amended, and the rules, regulations, and relevant orders of the Secretary of Labor. Neither lessee nor lessee's subcontractors should maintain segregated facilities.

Sec. 9. (a) TRANSFERS

- ☐ This lease may be transferred in whole or in part to any person, association or corporation qualified to hold such lease interest.
- ☐ This lease may be transferred in whole or in part to another public body or to a person who will mine coal on behalf of, and for the use of, the public body or to a person who for the limited purpose of creating a security interest in favor of a lender agrees to be obligated to mine the coal on behalf of the public body.
- ☐ This lease may only be transferred in whole or in part to another small business qualified under 13 CFR 121.

Transfers of record title, working or royalty interest must be approved in accordance with the regulations.

(b) RELINQUISHMENT - The lessee may relinquish in writing at any time all rights under this lease or any portion thereof as provided in the regulations. Upon lessor's acceptance of the relinquishment, lessee will be relieved of all future obligations under the lease or the relinquished portion thereof, whichever is applicable.

Sec. 10. DELIVERY OF PREMISES, REMOVAL OF MACHINERY, EQUIPMENT, ETC. - At such time as all portions of this lease are returned to lessor, lessee must deliver up to lessor the land leased, underground timbering, and such other supports and structures necessary for the preservation of the mine workings on the leased premises or deposits and place all workings in condition for suspension or abandonment. Within 180 days thereof, lessee must remove from the premises all other structures, machinery, equipment, tools, and materials that it elects to or as required by the BLM. Any such structures, machinery, equipment, tools, and materials remaining on the leased lands beyond 180 days, or approved extension thereof, will become the property of the lessor, but lessee may either remove any or all such property or continue to be liable for the cost of removal and disposal in the amount actually incurred by the lessor. If the surface is owned by third parties, lessor will waive the requirement for removal, provided the third parties do not object to such waiver. Lessee must, prior to the termination of bond liability or at any other time when required and in accordance with all applicable laws and regulations, reclaim all lands the surface of which has been disturbed, dispose of all debris or solid waste, repair the offsite and onsite damage caused by lessee's activity or activities incidental thereto, and reclaim access roads or trails.

Sec. 11. PROCEEDINGS IN CASE OF DEFAULT - If lessee fails to comply with applicable laws, existing regulations, or the terms, conditions and stipulations of this lease, and the noncompliance continues for 30 days after written notice thereof, this lease will be subject to cancellation by the lessor only by judicial proceedings. This provision will not be construed to prevent the exercise by lessor of any other legal and equitable remedy, including waiver of the default. Any such remedy or waiver will not prevent later cancellation for the same default occurring at any other time.

Sec. 12. HEIRS AND SUCCESSORS-IN-INTEREST - Each obligation of this lease will extend to and be binding upon, and every benefit hereof will inure to, the heirs, executors, administrators, successors, or assigns of the respective parties hereto.

Sec. 13. INDEMNIFICATION -Lessee must indemnify and hold harmless the United States from any and all claims arising out of the lessee's activities and operations under this lease.

Sec. 14. SPECIAL STATUTES - This lease is subject to the Clean Water Act (33 U.S.C. 1252 et seq.), the Clean Air Act (42 U.S.C. 4274 et seq.), and to all other applicable laws pertaining to exploration activities, mining operations and reclamation, including the Surface Mining Control and Reclamation Act of 1977 (30 U.S.C. 1201 et seq.).

Sec. 15. SPECIAL STIPULATIONS

(Continued on page 3)

THE UNITED STATES OF AMERICA

_____ (Company or Lessee Name)	By _____
_____ (Signature of Lessee)	_____ (BLM)
_____ (Title)	_____ (Title)
_____ (Date)	_____ (Date)

Title 18 U.S.C. Section 1001, makes it a crime for any person knowingly and willfully to make to any department or agency of the United States any false, fictitious or fraudulent statements or representations as to any matter within its jurisdiction.

NOTICES

The Privacy Act of 1974 and the regulation in 43 CFR 2.48(d) provide that you be furnished with the following information in connection with information required by this application.
AUTHORITY: 30 U.S.C. 181-287 and 30 U.S.C. 351-359.
PRINCIPAL PURPOSE: BLM will use the information you provide to process your application and determine if you are eligible to hold a lease on BLM Land.
ROUTINE USES: BLM will only disclose the information according to the regulations at 43 CFR 2.56(d).
EFFECT OF NOT PROVIDING INFORMATION: Disclosing the information is necessary to receive a benefit. Not disclosing the information may result in BLM's rejecting your request for a lease.

The Paperwork Reduction Act of 1995 requires us to inform you that:
The BLM collects this information to authorize and evaluate proposed exploration and mining operations on public lands.
Response to the provisions of this lease form is mandatory for the types of activities specified.
The BLM would like you to know that you do not have to respond to this or any other Federal agency-sponsored information collection unless it displays a currently valid OMB control number.

BURDEN HOURS STATEMENT: Public reporting burden for this form is estimated to average one hour per response including the time for reading the instructions and provisions, and completing and reviewing the form. Direct comments regarding the burden estimate or any other aspect of this form to U.S. Department of the Interior, Bureau of Land Management (1004-0073), Bureau Information Collection Clearance Officer (WO-630), 1849 C Street, Mail Stop 401 LS, Washington, D.C. 20240.