RIPARIAN AREA MANAGEMENT

TR 1737-10 1994, Revised 2001

The Use of Aerial Photography to Manage Riparian-Wetland Areas

U.S. Department of the Interior

Bureau of Land Management

Production services by:

National Science & Technology Center
Bureau of Land Management

Information and Communications Staff
Terry D'Erchia, Chief (303-236-6547)

Janine Koselak: Layout and Design
Linda Hill: Editing

Lee Barkow, Director
National Science & Technology Center
P.O. Box 25047
Denver, Colorado 80225-0047

The Bureau of Land Management's National Science and Technology Center supports other BLM offices by providing a broad spectrum of services in areas such as biological resources, engineering, lands and minerals, library assistance, mapping sciences, photo imaging, physical sciences, communications, and technology transfer.

Distribution by:

National Business Center
Bureau of Land Management

Denver Center Support Services Group
Robert Pinkney, Group Admin. (303-236-9420)

Sherri Hendren: Printing Coordination
Frank Tisby: Distribution Management

Dennis Sykes, Director
National Business Center
P.O. Box 25047
Denver, CO 80225-0047

The Bureau of Land Management's National Business Center (NBC) provides business and fiscal information and services. Information encompasses Bureauwide budgeting, financial, property, procurement, and collections systems; customers are supported by help desks, training, national support programs/services, and consulting services. User satisfaction and customer service are at the heart of NBC's organization.

Copies available from:
National Business Center
Printed Materials Distribution Service, BC-650B
P.O. Box 25047
Denver, Colorado 80225-0047
Phone: (303-236-7637)

TR 1737-10
BLM/ST/ST-01/002+1737
(formerly BLM/SC/ST-94/005+1737)

RIPARIAN AREA MANAGEMENT

The Use of Aerial Photography
to Manage Riparian-Wetland Areas

by

Pam Clemmer
Cartographer/Remote Sensing
Bureau of Land Management
National Science and Technology Center
Denver, Colorado

Technical Reference 1737-10
1994, Revised 2001

U.S. Department of the Interior
Bureau of Land Management
National Science and Technology Center
P.O. Box 25047
Denver, CO 80225-0047

Suggested citations:

Clemmer, Pam. 1994, Revised 2001. Riparian area management: The use of aerial photography to manage riparian-wetland areas. Technical Reference 1737-10. Bureau of Land Management, Denver, CO. BLM/ST/ST-01/002+1737. 54 pp.

U.S. Department of the Interior. 1994, Revised 2001. Riparian area management: The use of aerial photography to manage riparian-wetland areas. Technical Reference 1737-10. Bureau of Land Management, Denver, CO. BLM/ST/ST-01/002+1737. 54 pp.

Acknowledgments

This is an enhanced version of Technical Reference 1737-2, *The Use of Aerial Photography to Inventory and Monitor Riparian Areas* (Batson et al. 1987). Although much of the original content remains, this revised reference approaches the topic from a broader perspective.

The author wishes to thank the following individuals from the BLM Service Center (now the National Science and Technology Center) for the time they offered in review, comment, and development of this document: Don Prichard, Alan Amen, Larry Cunningham, and especially Ed Work.

A special thanks to Jason Swegle of the Remote Sensing Staff and to Linda Hill and Janine Koselak of the Technology Transfer Staff at the BLM Service Center (now the National Science and Technology Center) for making this a quality document.

Table of Contents

Page

I. Introduction 1

II. Purpose 3

III. Acquiring Aerial Photography 5

A. Planning the Project 5

1. Choosing Photo Parameters 5

2. Researching Existing Photos 7

B. Contracting for Aerial Photography 10

1. Planning for an Aerial Contract 11

2. Initiating an Aerial Contract 13

3. Placing Ground Targets 14

4. Collecting Data On-Site 15

IV. Interpreting and Analyzing Aerial Photos 17

A. Involving Others in Analysis 17

1. Using Local BLM Staff 17

2. Requesting Service Center Assistance 17

3. Contracting for Analysis 17

B. Initiating Interpretation 17

1. Preparing the Photos 18

2. Selecting the Minimum Mapping Unit (MMU) 19

3. Developing the Vegetation Analysis Framework 20

4. Analyzing the Photos 20

5. Using Photo Mensuration 21

C. Capturing Data for GIS Input 22

1. Determining the Map Base 22

2. Transferring Data to the Map Base 22

3. Capturing Data in a GIS 23

V. Using Remote Sensing for Field Applications 25

A. Inventorying and Monitoring Riparian-Wetland Areas 25

1. Acquiring Photos for Monitoring 26

2. Analyzing Photos for Monitoring 26

B. Determining Classification 26

C. Assessing Functionality 27

D. Supporting Other Management Techniques 28

VI. Summary 31

Literature Cited 33

Appendix A: Minimum Mapping Unit Templates 35

Appendix B: Sample Vegetation Analysis Framework 39

Appendix C: Remote Sensing Application Guide for Riparian-Wetland Area Management 41

Appendix D: Aerial Photo Samples 47

The Use of Aerial Photography to Manage Riparian-Wetland Areas

I. Introduction

Under the Federal Land Policy and Management Act (FLPMA) of 1976, the Bureau of Land Management (BLM) is required to inventory lands and resources on a continuing basis. Aerial photography and other remote sensing techniques can be used to obtain inventory data and can be valuable tools for making management decisions. Aerial photos have proven especially useful in the management of riparian-wetland areas.

There are many benefits to using aerial photography for managing riparian-wetland areas. For example, using large-scale color infrared or natural color aerial photography can accelerate and enhance collection of ground data. Percent of canopy and ground cover, bare soil, and acreage can also be calculated from aerial photos. Riparian-wetland plant communities can be delineated for mapping purposes, and generalized vegetation/soil correlations can also be made. Aerial photos furnish a historical record of the condition of an area at a given point in time; therefore, changes in riparian-wetland areas can be visually assessed by comparing aerial photos taken at a later date. Aerial photos also link data geographically, allowing detailed vegetation maps to be transferred to a Geographic Information System (GIS) for spatial modeling purposes.

Remote sensing techniques provide valuable information for both ecosystem-based and site-specific riparian-wetland management decisions. As BLM moves toward ecosystem-based management, resources will be managed across jurisdictional boundaries on a global, regional, or watershed basis. Small-scale aerial photos (e.g., 1:40,000) and satellite imagery can provide a broad ecosystem perspective of a watershed. Specific problem areas or limiting factors in the management of a riparian-wetland area can be identified through preliminary analysis. Once problem areas are identified, larger scale imagery (e.g., 1:12,000, 1:6,000, or 1:4,800), acquired using an aerial camera on board a low-flying aircraft, can be used to focus on site-specific areas of interest.

Baseline data is required to effectively manage riparian-wetland areas. Aerial photo baseline data, when carefully selected prior to a project, allows analysis of a large area of interest, at a minimum cost, in less time per hectare than conventional on-the-ground methods (Keating 1993). Properly documented baseline data can support or disprove management decisions.

II. Purpose

The purpose of this technical reference is to provide resource specialists with the basic information, concepts, and procedures associated with using aerial photography to establish baseline data for effective management of riparian-wetland areas. This technical reference provides suggestions for the use of various scales of photography, guidance for acquiring aerial photography, and general procedures for conducting a vegetation inventory.

III. Acquiring Aerial Photography

Successful projects using aerial photography are carefully planned prior to initiation. The *ultimate objective* of a project must be defined before aerial photos are acquired. Once the objective is defined, the project can proceed to the next phases, which include: choosing the correct photo parameters (i.e., scale, type of film), acquiring the data, preparing the data, interpreting the data, analyzing the data, transferring the data to an appropriate map base, and capturing the data in a GIS. Although the initial effort is time-consuming, once the data is entered into a GIS, the resource specialist has developed a baseline that can be used for modeling analysis with other data sets. State Office or National Science and Technology Center personnel are available to lend technical assistance as needed.

A. Planning the Project

Planning for photo acquisition and analysis is a critical phase of the interpretive effort that is often overlooked or ignored. First, and most importantly, the intended use of the resulting photography must be *clearly defined* prior to selection and acquisition of the photography. Careful planning ensures that the correct photo parameters (i.e., scale of photos, film type) are selected to accomplish the task.

1. Choosing Photo Parameters

Remotely sensed data is most effective when used from a *multistage* perspective, which involves studying the overall area or ecosystem with satellite imagery, or small-scale aerial photography, gradually focusing in on the site-specific areas of interest with larger scale photography. Standard 7 1/2-minute-scale topographic maps should be used in conjunction with satellite imagery or small-scale (1:40,000 to 1:80,000) photos to delineate and determine overall condition of the watershed or limiting factors that help define capability and potential. Once a broad overall perspective is acquired, riparian-wetland areas in need of further study can be identified. Scale and film type are selected based on the desired result. For example, after studying the watershed using 1:40,000-scale photos, the resource specialist might want a more intensive inventory over the project area at scales of 1:12,000, 1:6,000, or larger.

a. Selecting Film

Resource specialists should determine the ultimate objective of their study and select the scale and film type accordingly. If vegetation composition is needed, color infrared photography should be chosen. Infrared film allows the interpreter to detect subtle differences in vegetation due to high sensitivity of the film in the infrared portion of the electromagnetic spectrum. The human eye is not capable of discerning the infrared portion

of the electromagnetic spectrum. Advances in film technology allow us to "see" a part of the spectrum that we do not see with our naked eye. Natural color film is adequate if more general information is desired, such as acreage, percent of canopy cover, channel widths, stream lengths, general improvement, or increase of riparian-wetland vegetation. Photos 1a and 2a in Appendix D provide a comparison of natural color and color infrared, respectively.

b. Selecting Scale

Resource specialists should determine the smallest scale possible to accomplish the task. The concept of large scale versus small scale is often confusing. When comparing a large- and small-scale photo over the same site, features on the small-scale photo appear smaller. The representative fraction (RF) scale is a small fractional number. For example, 1/24,000 is a smaller scale than 1/12,000. These fractional scales are commonly expressed as ratio scales of 1:24,000 and 1:12,000. If the film format is the same for both photos (e.g., 9- x 9-inch), the small-scale photo (1:24,000) covers a greater ground area than the large-scale photo (1:12,000).

Relatively speaking, a smaller scale requires fewer photos and covers a larger area (Table 1). The interpretive process is accelerated because there are fewer photos to interpret and transfer to a map base. With the proper optical equipment, interpretation can be accomplished at a much smaller scale (Aldrich 1979).

Care should be taken to select a scale that is small enough to make the job easier, but large enough to interpret the detail needed. (Photos 2a and 3a in Appendix D provide a comparison of different scales of the same area.) As a test, several different scales of film transparencies or prints can be ordered for the area of interest, such as stereo pairs at scales of 1:40,000 and 1:24,000, and larger scales of 1:12,000, 1:6,000, or 1:4,800. (Photos 5, 6a, and 7 in Appendix D are examples of larger scales.) The photos can then be carefully studied and compared to determine the level of detail derived from each. A smaller scale should be selected for synoptic coverage and a larger scale for site-specific analysis.

Table 1. Estimating Photo Coverage per 100,000 Acres Based on Scale [1]

Photo scale	Number acres per square inch	Number acres per photo [2] (3.6 by 6.3 inches)	Number photos per 100,000 acres
1:2,400	1	23	4,348
1:4,800	4	91	1,099
1:6,000	6	136	735
1:12,000	23	522	192
1:15,840	40	907	110
1:20,000	64	1,452	69
1:24,000	92	2,087	48
1:40,000	255	5,783	17

[1] Aldrich, Robert C., 1979. Remote Sensing of Wildland Resources: A State-of-the-Art Review, General Technical Report RM-71; Table 4, p. 33.

[2] 60% overlap; 30% sidelap.

2. *Researching Existing Photos*

Before a new aerial contract is initiated, research should be done to determine whether photos for the area of interest already exist. Photos are accessible from several sources.

a. *National High Altitude Photography (NHAP)*

The NHAP program acquired photos from 1979 to 1987. This photography was funded by several Federal agencies and includes coverage of the lower 48 States in color infrared at 1:58,000 scale and in black and white at 1:80,000 scale. Although older, these photos provide excellent resolution and historical perspective. The scale of the photos is appropriate for synoptic viewing of an area, watershed delineation, general riparian-wetland analysis, and change detection applications. The U.S. Forest Service produced several case studies that use NHAP for riparian-wetland inventory applications (Mereszczak et al. 1990). U.S. Fish and Wildlife Service has used 1:58,000 color infrared NHAP for wetlands delineation.

b. *National Aerial Photography Program (NAPP)*

NAPP replaced the NHAP program in 1987. Funded by the same agencies, NAPP provides complete cyclic coverage of the lower 48 States beginning in 1987. NAPP photos were originally obtained using color infrared film at a scale of 1:40,000 (Photo 3a, Appendix D). Coverage is available for nearly all the Western States. Due to national mapping requirements for the Digital Orthophotography Quadrangle (DOQ) program, NAPP now uses black-and-white film almost exclusively. Black-and-white film provides

higher resolution needed for orthophoto production at lower cost than color infrared film. The scale of the NAPP photos (1:40,000) is appropriate for the same applications as those listed for NHAP. Both NHAP and NAPP provide high-quality photographic products that can be satisfactorily enlarged to 1:24,000 scale. Photos 3a and 4 in Appendix D provide a comparison of these scales. Anderson and Hardin (1992) have demonstrated the use of NAPP color infrared photos for delineating wetlands in Utah.

NHAP and NAPP photography can be aquired from EROS Data Center (EDC) in Sioux Falls, South Dakota, or the U.S. Department of Agriculture's Aerial Photographic Field Office (APFO) in Salt Lake City, Utah. Online searches and ordering can be conducted at http://edcsns17.cr.usgs.gov/EarthExplorer/.

c. BLM Photography

BLM has acquired a considerable amount of aerial photography over the years. Most of this photography is archived at BLM's Aerial Photography Archive and Processing Lab, Denver Federal Center, CO 80225, with the remainder stored at EDC. BLM photos consist of resource block photography at scales from 1:12,000 to 1:24,000. Block photography implies photography acquired as adjacent photo flight lines. Block photography usually has 60 percent endlap between successive photos with a sidelap between adjacent flight lines of 30 percent. Smaller scales (e.g., 1:24,000) are appropriate for a broad perspective of a stream reach and generalized riparian-wetland analysis.

Smaller areas of strip photography (riparian-wetland and special projects) are acquired in select areas at larger scales of 1:6,000, 1:4,800, or 1:3,000 (Photo 5, Appendix D). Strip photography consists of a single flight line of photos (e.g., stream reaches) where an endlap between successive photos of 60 percent is commonly maintained for purposes of stereoscopic viewing. Site-specific riparian-wetland inventory is easily accomplished at scales of 1:12,000, 1:6,000, or greater. If vegetation differentiation is a requirement, color infrared film is preferred over natural color.

d. Aerial Photography Summary Record System (APSRS)

The APSRS is a photography database maintained by the Earth Science Information Center (ESIC) of the United States Geological Survey (USGS). This record system lists photos available from various Federal, State, and local governments, and from private companies that maintain aerial photography film archives. NHAP, NAPP, and BLM photos are found in this listing, in addition to photos from many other sources. The listing is referenced by the geographic coordinate (latitude/longitude) of the southeast corner of any 7 1/2-minute topographic map. BLM's National Science and Technology Center (NSTC) staff can supply a microfiche listing from the database for any specified topographic map upon request. The APSRS database is also available on CD-ROM from the USGS for a nominal cost. Figure 1 shows a sample of the APSRS listing for the Palmer Lake 7 1/2-minute quadrangle.

*** GRID A08 ***

ESIC — AERIAL PHOTOGRAPHY SUMMARY RECORD SYSTEM — DATE: 11/08/91

INDEX CROSS REFERENCE — PAGE 643

AGENCY CODE	RPT TYP	G/W	SE CORNER LAT DEG	LAT MIN	LONG DEG	LONG MIN	FIPS CODE ST	CTY	DATE OF COVERAGE YR	MO	DAY	STA	AGENCY PROJECT CODE	IMAGE SCALE	FOCAL LENGT	FILM TYPE	FILM FMT	SENS CLAS	CLOUD COVER	CAM SPEC	QUAD COVER	REMARKS OR SCENE ID	FRAMES FROM	TO	CASSETTE NO.	FRAME
ASCS	2	2	39	00	104	45	08	041	55	09	08	3	YL	20000	05	4	3	1	0	Y		EL PASO 7-8				
USA	3	2	39	00	104	45			53	09	25	3	001	63299		4		1	0			1 260930785				
USGS	2	2	39	00	104	45			52	10	31	3	VU	28400	20	4	3	1	0	Y					0038	0404
SCS	2	2	39	00	104	45			51			3		20000	05	4	3	1	0	Y		PARTIAL				
NASAAM	3	2	39	00	104	52			88	08	11	3	03773	32000	14	2	9	2	0		6	588003773	0007	0009	0000	0000
NASAAM	3	2	39	00	104	52			88	08	11	3	03772	64000	06	2	3	2	0		6	588003772	5508	5510	0000	0000
NASAAM	3	2	39	00	104	52			88	08	11	3	03772	63000	06	2	3	2	1		6	588003772	5462	5463	0000	0000
NASAAM	3	2	39	00	104	52			88	08	11	3	03772	63000	06	2	3	2	0		5	588003772	5464	5465	0000	0000
NASAAM	3	2	39	00	104	52			88	08	11	3	03773	32000	14	2	9	2	0		5	588003773	0010	0011	0000	0000
NASAAM	3	2	39	00	104	52			88	08	11	3	03773	32000	14	2	9	2	0		5	588003773	0091	0097	0000	0000
NASAAM	3	2	39	00	104	52			88	08	11	3	03772	64000	06	2	3	2	1		5	588003772	5505	5507	0000	0000
NASAAM	3	2	39	00	104	52			88	08	11	3	03773	32000	14	2	9	2	0		3	588003773	0012	0014	0000	0000
NASAAM	3	2	39	00	104	52			88	08	11	3	03773	32000	14	2	9	2	0		3	588003773	0003	0006	0000	0000
NASAAM	3	2	39	00	104	52			88	08	11	3	03773	32000	14	2	9	2	0		3	588003773	0082	0088	0000	0000
NASAAM	3	2	39	00	104	52			88	08	11	3	03772	64000	06	2	3	2	2		3	588003772	5461	5461	0000	0000
NASAAM	3	2	39	00	104	52			88	08	11	3	03772	63500	06	2	3	2	1		2	588003772	5459	5460	0000	0000
USGS	3	2	39	00	104	52	08		88			3	NP88310040000		04	2	3	1	0	Y		NAPP-LEAF ON				
USGS	2	2	39	00	104	52			85	06	01	3	N39 4	58000	20	2	3	1	0	Y					0083	0150
USGS	2	2	39	00	104	52			85	06	01	3	N39 4	80000	20	4	3	1	0	Y					0083	0050
LANDAZ	3	2	39	00	104	52			81	07		3	UHOUSE	30000	04	4	3	2	0	N		CO SPRINGS 2/YR				
NASAAM	3	2	39	00	104	52			80	06	25	3	02895	114833	14	2	3	2	5		8	580002895	0056	0061	0270	0248
NASAAM	3	2	39	00	104	52			80	06	25	3	02896	114500	14	2	3	2	2		5	580002896	4066	4067	0270	0286
NASAAM	3	2	39	00	104	52			80	06	25	3	02895	121000	14	2	3	2	6		4	580002895	0062	0062	0270	0254
NASAAM	3	2	39	00	104	52			80	06	25	3	02895	117000	14	2	3	2	0		3	580002895	0090	0090	0270	0282
NASAAM	3	2	39	00	104	52			80	06	25	3	02896	115250	14	2	3	2	0		2	580002896	4068	4071	0270	0288
USFS02	2	2	39	00	104	52			75	10		3	08041	15840	05	3	3	1	0	Y		08				
USGS	2	2	39	00	104	52			75	06	29	3	VDSD	80000	20	4	3	1	0	Y					0057	0631
ASCS	3	2	39	00	104	52			75			3	75-4	40000	04	4	3	1	0	Y	2	DOUGLAS-CO-1				
NASAJS	3	2	39	00	104	52			74	01	11	3	2610	108040	04	1	3	2	0		8	626100110	0004	0009	1255	0005
NASAJS	3	2	39	00	104	52			74	01	11	3	2610	116500	04	1	3	2	0		3	626100110	0026	0027	1255	0027
NASAJS	3	2	39	00	104	52			73	08	15	3	2480	56854	06	2	3	2	0			624800690	0132	0148	1304	1495
NASAJS	3	2	39	00	104	52			73	08	09	3	2480	111686	04	3	3	2	0			624800400	0023	0028	1303	1149
NASAJS	3	2	39	00	104	52			73	08	09	3	2480	108460	04	2	3	2	0			624800390	0023	0028	1303	1016
NASAJS	3	2	39	00	104	52			73	08	04	3	2480	112942	04	2	3	2	1		3	624800230	0161	0169	1302	1396
NASAJS	3	2	39	00	104	52			73	08	04	3	2480	114965	04	3	3	2	1		3	624800220	0173	0174	1302	1206
NASAJS	3	2	39	00	104	52			73	08	04	3	2480	113528	04	3	3	2	0		2	624800220	0161	0169	1302	1194
NASAJS	3	2	39	00	104	52			73	08	04	3	2480	115020	04	2	3	2	1			624800230	0172	0180	1302	1407
NASAJS	3	2	39	00	104	52			73	08	04	3	2480	114965	04	3	3	2	4			624800220	0175	0182	1302	1208
NASAAM	3	2	39	00	104	52			72	10	26	3	00755	116000	04	2	3	2	0			572000755	5935	5942	0174	0462
USAF	3	2	39	00	104	52			72	06	15	3	07215	74057	14	4	3	2	0		2	2 0010069				
USAF	3	2	39	00	104	52			72	06	15	3	07215	74846	14	4	3	2	1			2 0010077				
NASAJS	3	2	39	00	104	52			72	06	14	3	2050	56396	06	2	3	2	0		7	620500610	0040	0048	0579	1578
NASAJS	3	2	39	00	104	52			72	06	14	3	2050	106283	04	3	3	2	1		5	620500600	0035	0044	0579	1452
NASAJS	3	2	39	00	104	52			72	06	14	3	2050	108443	04	2	3	2	1		5	620500590	0035	0044	0579	1331
NASAJS	3	2	39	00	104	52			72	06	14	3	2050	109071	04	2	3	2	1			620500590	0013	0030	0579	1309
NASAJS	3	2	39	00	104	52			72	06	14	3	2050	107609	04	3	3	2	1			620500600	0013	0030	0579	1430
NASAJS	3	2	39	00	104	52			72	06	02	3	2050	107225	04	3	3	2	0		8	620500180	0032	0051	0579	0920
NASAJS	3	2	39	00	104	52			72	06	02	3	2050	107113	04	2	3	2	0		8	620500170	0032	0051	0579	0759
NASAJS	3	2	39	00	104	52			72	06	02	3	2050	55159	06	2	3	2	6		8	620500190	0089	0089	0579	1137
NASAJS	3	2	39	00	104	52			72	06	02	3	2050	55512	06	2	3	2	0		7	620500190	0081	0088	0579	1129

*** GRID B08 ***

ESIC — AERIAL PHOTOGRAPHY SUMMARY RECORD SYSTEM — DATE: 11/08/91

INDEX CROSS REFERENCE — PAGE 644

AGENCY CODE	RPT TYP	G/W	SE CORNER LAT DEG	LAT MIN	LONG DEG	LONG MIN	FIPS CODE ST	CTY	DATE OF COVERAGE YR	MO	DAY	STA	AGENCY PROJECT CODE	IMAGE SCALE	FOCAL LENGT	FILM TYPE	FILM FMT	SENS CLAS	CLOUD COVER	CAM SPEC	QUAD COVER	REMARKS OR SCENE ID	FRAMES FROM	TO	CASSETTE NO.	FRAME
NASAJS	3	2	39	00	104	52			72	06	02	3	2050	105684	04	2	3	2	8		3	620500170	0055	0059	0579	0782
NASAJS	3	2	39	00	104	52			72	06	02	3	2050	105868	04	2	3	2	0		2	620500170	0010	0019	0579	0737
NASAJS	3	2	39	00	104	52			72	06	02	3	2050	105380	04	3	3	2	0		2	620500180	0009	0019	0579	0897
NASAJS	3	2	39	00	104	52			72	06	02	3	2050	102583	04	3	3	2	8		2	620500180	0055	0059	0579	0943
NASAJS	3	2	39	00	104	52			72	06	02	3	2050	104458	04	3	3	2	4			620500180	0052	0053	0579	0940
NASAJS	3	2	39	00	104	52			72	06	02	3	2050	105506	04	3	3	2	4			620500170	0052	0053	0579	0779
NASAJS	3	2	39	00	104	52			71	10	18	3	1890	107542	04	3	3	2	1		8	618900320	3783	3797	1216	1569
NASAJS	3	2	39	00	104	52			71	10	18	3	1890	107367	04	3	3	2	1		8	618900310	1689	1701	1216	1446
NASAJS	3	2	39	00	104	52			71	10	18	3	1890	108557	04	3	3	2	1		6	618900310	1731	1736	1216	1488
NASAJS	3	2	39	00	104	52			71	10	18	3	1890	106941	04	3	3	2	1		6	618900320	3825	3830	1216	1611
NASAJS	3	2	39	00	104	52			71	10	18	3	1890	106642	04	3	3	2	3		5	618900320	3823	3824	1216	1609
NASAJS	3	2	39	00	104	52			71	10	18	3	1890	105691	04	3	3	2	3		5	618900310	1729	1730	1216	1486
NASAJS	3	2	39	00	104	52			71	10	18	3	1890	34957	06	2	3	2	2		2	618900330	0110	0110	1217	0112
USGS	2	2	39	00	104	52			70	11	20	3	BENGL	138504	04	4	3	1	0	Y					0001	0052
USGS	2	2	39	00	104	52			70	11	20	3	BENGL	138481	04	4	3	1	0	Y					0001	0050
MH	2	2	39	00	104	52			70	10		3	COLO	80000	04	4	3	1	0	Y		7.5QUAD CENTERED				
NASAJS	3	2	39	00	104	52			70	07	21	3	1390	114799	04	3	3	2	0		4	613900010	5346	5351	0457	1493
NASAJS	3	2	39	00	104	52			70	07	21	3	1390	110796	04	3	3	2	0		3	613900020	5698	5703	0458	0011
USGS	2	2	39	00	104	52			69	09	27	3	VCHS	40015	20	4	3	1	0	Y					0030	0598
ASCS	2	2	39	00	104	52	08	041	62	06	20	3	YL	20000	05	4	3	1	0	Y	1	EL PASO 10-11				
ASCS	2	2	39	00	104	52	08	041	55	09	08	3	YL	20000	05	4	3	1	0	Y	5	EL PASO 8-8				
USA	3	2	39	00	104	52			53	09	25	3	001	63299		4		1	0			1 260930785				
USGS	2	2	39	00	104	52			53	07	08	3	VV	37400	20	4	3	1	0	Y					0043	0102
SCS	2	2	39	00	104	52			51			3		20000	05	4	3	1	0	Y		PARTIAL				
USGS	3	2	39	00	105	00	08		90			3	NP88310040000		04	2	3	1	0	Y		NAPP-LEAF ON				
USGS	2	2	39	00	105	00			88	09	01	3	N39 5	80000	20	4	3	1	0	Y					0083	0050
USGS	2	2	39	00	105	00			88	09	01	3	N39 5	58000	20	2	3	1	0	Y					0083	0150
NASAAM	3	2	39	00	105	00			88	08	11	3	03772	64000	06	2	3	2	0		7	588003772	5508	5510	0000	0000
NASAAM	3	2	39	00	105	00			88	08	11	3	03772	63000	06	2	3	2	2		7	588003772	5487	5488	0000	0000
NASAAM	3	2	39	00	105	00			88	08	11	3	03772	63000	06	2	3	2	0		6	588003772	5482	5486	0000	0000
NASAAM	3	2	39	00	105	00			88	08	11	3	03773	32000	14	2	9	2	0		6	588003773	0049	0051	0000	0000

Figure 1. Palmer Lake, Colorado (39° 00' N, 104° 52' W), APSRS listing.

If aerial photos for the area of interest already exist, adequate time should be allowed to order and receive the prints or film. In many instances, it can take up to 8 weeks to receive photos. State Office remote sensing coordinators or BLM's Aerial Photography Archive and Processing Lab can provide assistance in obtaining photos from any of these sources.

Once the photos are received, resource specialists are ready for interpretation and analysis. It is highly recommended that film transparencies be used instead of prints. When viewed with adequate back-lighting, transparencies provide sharper images, making interpretation easier. Of course, the stereoscopic equipment available to the interpreter determines whether film or prints are ordered.

B. Contracting for Aerial Photography

If larger scale, more current aerial photos are desired, or if no photos exist for the area of interest, an aerial photo contract should be considered. The following contract guidelines are aimed primarily toward large-scale strip photography contracts. Generally the same procedures apply for block photography acquisition. Tables 2 and 3 show approximate costs for both strip and block projects.

Table 2. Scale, Coverage, and Costs for Resource Block Aerial Photography Contracts

Scale	Descriptive Scale	Approximate Cost Per Square Mile ($)[1]	
		Color	*Infrared*
1:12,000	1" = 1,000'	36.00	42.00
1:15,840	= 1,320'	29.00	32.00
1:24,000	= 2,000'	12.00	14.00

[1] Approximate costs are based on 1994 average contract costs. Actual cost may vary significantly depending upon the region and size of the job.

Table 3. Scale, Coverage, and Costs for Strip (i.e., riparian) Aerial Photography Contracts

Scale	Descriptive Scale	Approximate Cost Per Linear Mile ($)[1]	
		Color	*Infrared*
1:2,400	1" = 200'	200.00	225.00
1:4,800	= 400'	175.00	200.00
1:6,000	= 500'	150.00	175.00
1:12,000	= 1,000'	100.00	125.00

[1] Approximate costs are based on 1994 average contract costs. Actual cost may vary significantly depending upon the region and size of the job.

1. *Planning for an Aerial Contract*

It is strongly recommended that resource specialists consult the State Office remote sensing coordinators or NSTC remote sensing staff *before* initiating an aerial contract.

a. *Selecting the Riparian-Wetland Area*

Areas that are of primary concern should be selected carefully. The beginning and end points of stream reaches requiring coverage should be identified on a 1:24,000-scale USGS 7 1/2-minute topographic map (Figure 2). It is best not to skimp on photo coverage. Once the aircraft is over the area, an additional two or three exposures do not add significantly to the overall cost of the project.

b. *Determining Season and Time of Day*

Ideally, the photos should be obtained as near to "peak of green" as possible. This is generally near the point where vegetation is growing vigorously and is at a full leaf stage. Local resource specialists usually know when peak of green occurs. In addition, if deep canyons are in the area, field specialists should specify a higher sun angle than normal (i.e., time of day) for the flight in order to minimize shadows within the canyon depression.

The objective of the project should be considered when selecting the date of photography. Generally, riparian vegetation is more easily distinguished from upland vegetation in photos taken later in the growing season.

c. *Selecting Film*

The intended use of the imagery directly relates to the type of film required. For example, if the extent of a riparian-wetland area is to be outlined and quantified (in acres), natural color film is adequate. If vegetation composition (i.e., trees, shrubs, grasses) is to be analyzed, color infrared film is preferred. Color infrared film captures a greater range of spectral reflectance variation between vegetation types than does natural color film.

d. *Selecting Scale*

Intended use also has a direct bearing on scale requirements. For example, a scale of 1:24,000 or smaller is sufficient to locate most riparian-wetland areas, make linear (mileage) measurements, and determine watersheds. However, to visually analyze, delineate, and measure areas to the community level for later comparison (monitoring), a scale of 1:2,400 to 1:6,000 is recommended for narrow strips of riparian-wetland vegetation. Wider meandering riparian-wetland zones may require photo scales from 1:4,800 to 1:12,000 in order to photographically cover the area with a single flight line. If the adjacent uplands are of interest, a smaller scale should be considered. Again, the larger the scale, the more costly the project, so the smallest possible scale for accomplishing the task should be selected.

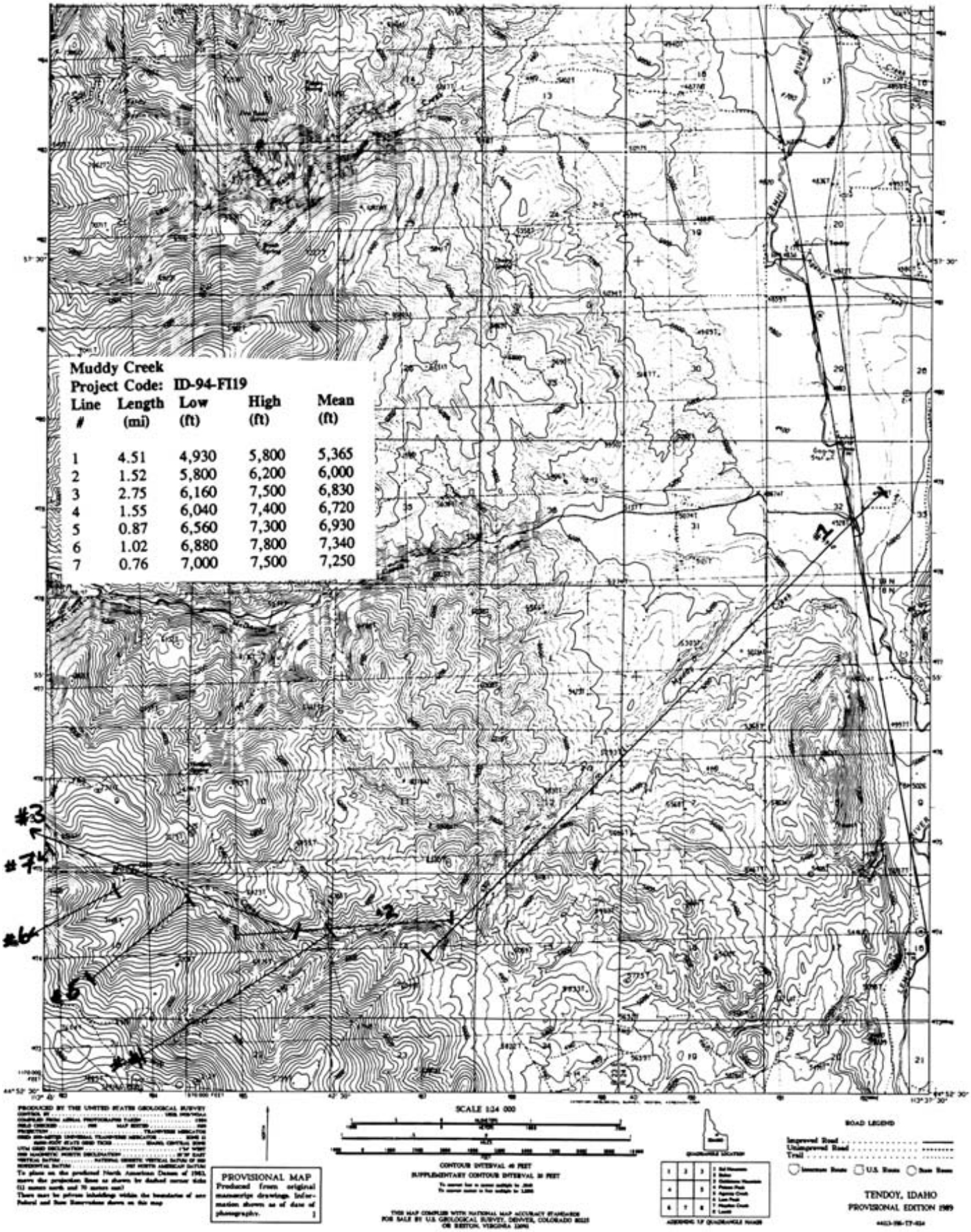

Figure 2. Coverage required for Muddy Creek is identified on a USGS 7 1/2-minute topographic map.

2. *Initiating an Aerial Contract*

The necessary paperwork for an aerial contract should be initiated at least 6 months prior to the expected flight date to allow time for preparing specifications, requesting photo lab work, securing bids, awarding the contract, and holding a prework conference. Contracts under $100,000 can be handled by the State or Field Offices. Contracts of $100,000 or greater are handled by the procurement staff at BLM's National Business Center.

a. Preparing Specifications for Aerial Photography

Technical aerial photography specification packets are available from NSTC's aerial photo coordinator. These specifications incorporate the preplanning considerations mentioned, in addition to other requirements for obtaining quality imagery. Form 9672-3, Specification Detail Sheet (July 1984), is an attachment to the specifications. The form provides space for specific information relative to the acquisition of the photography and any additional requirements not covered in the specifications. NSTC can provide these packets or assist in completing this form.

b. Preparing the Flight Map

Flight maps should be prepared from USGS topographic maps. The 1:24,000-scale, 7 1/2-minute topographic map is used for large-scale strip projects (i.e., riparian) and the 1:100,000-scale map is used for smaller scale block projects (e.g., 1:12,000, 1:24,000). Generally these maps are prepared by the State Office remote sensing coordinators or the NSTC aerial photo coordinator in consultation with the State or Field Office.

c. Procuring the Photography

The procurement process is usually handled by State Offices or NSTC. Technical assistance on photo procurement procedures is available from the NSTC aerial photo coordinator. The method of contracting for photography is usually determined by the estimated size and cost of a project.

Cooperative planning between BLM offices and other Federal, State, and local agencies can significantly reduce project costs. A major cost item is ferry time for the flight crew from the contractor’s home base to the project site. If the project is combined with another project in a nearby area, the ferry charge is minimized.

Assuming the project cost is within the authority of the local contracting officer, the following options for contracting the job are available:

1) A formal Invitation for Bid can be issued. This is done through the National Business Center when large contracts are involved.

2) Standard Form 18 can be used to obtain written quotations. Under this procedure, specifications, maps, and other items that clarify the request for price quotations can be sent. At least 3 weeks should be allowed to receive bids.

3) The Oral Quotations Form 1510-42 for supplies and services can be used. This form is generally used for small aerial photo contracts with requirements that can be described sufficiently over the phone to obtain price quotes.

Any questions regarding the procurement process should be directed to NSTC's aerial photo coordinator.

3. Placing Ground Targets

Ground targeting, also called paneling, is essential for larger scale photo contracts (i.e., 1:2,400 to 1:12,000). With larger scale photos, it is often difficult to determine the photo scale using map identifiable features. Acquiring the known ground distance between two targets allows the interpreter to calculate the actual photo scale (Photo 6a, Appendix D). Once the photo scale is determined, photo mensuration (linear measurements and acreage determination) can be accomplished directly on the photo using a simple formula (see section IV.B.5).

Targeting should be completed not more than 1 week prior to flying to avoid target loss from wind, animal disturbance, or vandalism. Target panels can be constructed from butcher paper, which is readily available from butcher shops and grocery stores, or from plastic material. Butcher paper is biodegradable, but the plastic material is not. Targets should be anchored with twine, rocks, or nails and large washers. The target material should be removed once the aerial photography has been accepted. Sometimes photos from portions of contracted flights are rejected due to clouds or excessive tip, tilt, or crab of the aircraft, and those areas are required to be reflown.

For riparian areas along stream corridors, two targets should be placed at each end of a stream reach. For longer stream segments, another set (two targets) should be placed at approximately 2-mile intervals along the stream or at the midpoint of the segment. The following guidelines are acceptable for photo scales of 1:2,400 to 1:6,000:

- Targets should be placed 200 to 500 feet apart within the photo coverage area, with one of the targets near the stream where ground data and photos will be taken. An accurate ground distance between the targets should be measured and recorded for later use in determining photo scale. Targets should be placed in relatively flat terrain within clear view of the aircraft.

- Target panels should be in the form of crosses (+). Each target panel should be 10 feet long and at least 18 inches wide for large-scale projects.

If photogrammetric work is anticipated, the requirements for target placement are more strict. Horizontal and vertical control points need to be collected using survey quality Global Positioning System (GPS) units. Photogrammetry techniques are used to obtain extremely accurate measurements. NSTC's photogrammetry staff should be consulted on target placement and is available to assist in mission planning upon request.

4. Collecting Data On-Site

On-site data collection efforts should be accomplished at the time of target placement. Data collected on-site provides the interpreter with valuable information about on-ground conditions at the time the photos are acquired. Photos 1b, 2b, and 3b of Appendix D show on-ground conditions for the areas in Photos 1a, 2a, and 3a, respectively. Although field verification is valuable anytime during the project, it is important for the interpreter to know the site conditions at the time of photo acquisition.

Slides (35-mm) of the riparian-wetland area should be taken at the site where the targets are placed, and inventory data should be collected for the reach. The dominant and subdominant herbaceous vegetation, shrubs, and trees, and the percent bare soil should be determined. Data acquired in the field can be used to develop interpretive guidance once the photos have been acquired. This data should include any additional field notes that may assist in photo interpretation. Sketched maps annotated to indicate the presence and type of land cover (e.g., plant species, soil type) are useful for developing photo interpretation keys.

The approximate coordinate locations of the targets should be determined from a topographic map (Photo 6a and 6b, Appendix D). Coordinate location can be useful for locating oneself during interpretation. If possible, differentially corrected GPS coordinates for the center of the target panels should be collected. Accurate coordinate locations aid in registering and entering data into a GIS.

IV. Interpreting and Analyzing Aerial Photos

Once photos have been acquired, local BLM staff, State or NSTC personnel, or contracted facilities can perform interpretation; however, interpretation is best performed by someone familiar with the local vegetation and ecosystem characteristics.

A. Involving Others in Analysis

1. Using Local BLM Staff

Photo interpretation and data analysis should be performed at the local Field Office level by resource specialists familiar with vegetation and management activities on the site. Interdisciplinary involvement in interpretive analysis will provide a broader perspective. State and Field Office remote sensing expertise should also be called upon, when available. Contacts should be made with any Federal, State, and local agencies who may have an interest in the area under consideration. These contacts may contribute expertise in analysis, existing data, or financial assistance for a data-sharing project.

2. Requesting NSTC Assistance

Optical photo interpretation equipment is sensitive, fragile, and difficult to move. Such interpretation equipment is available at the NSTC for use by BLM Field Office personnel. Facilities and staff from the NSTC remote sensing staff are also available to help field personnel with analysis. Generalized interpretation can be accomplished at NSTC, followed by verification assistance from specialists in the field.

3. Contracting for Analysis

Educational institutions, consulting firms, and other Government agencies may offer interpretation and analysis capabilities. For instance, the Environmental Protection Agency (EPA) facility in Las Vegas, Nevada, has cooperated with BLM offices in past years. This type of cooperation varies from performing the analysis and documenting the results to simply making their facilities available for a BLM work session.

B. Initiating Interpretation

Input into a GIS requires transferring interpretations from aerial photos to a stable map base. If GIS input is not the ultimate goal, and information is to be used only to calculate approximate acreage of riparian-wetland vegetation, photo mensuration procedures should be used (see section IV.B.5).

1. *Preparing the Photos*

a. *Delimiting the Effective Area*

During the interpretation process it is important to analyze only the "effective area" of each photo. Generally, the effective area is the central portion of the photo and includes overlap and sidelap from adjacent photos (Figure 3). The effective area serves two purposes. It defines the area of least geometric distortion in the photo and it allows the interpreter to delineate and classify the features in a project area once and only once, eliminating inefficient and multiple interpretations that could occur if a larger area on the overlapping photo were to be interpreted. The drawing of the effective area on every photo can be a tedious and protracted process, a discussion of which is beyond the scope of this technical reference. Crisco (1988) provides detailed information regarding effective area delineation.

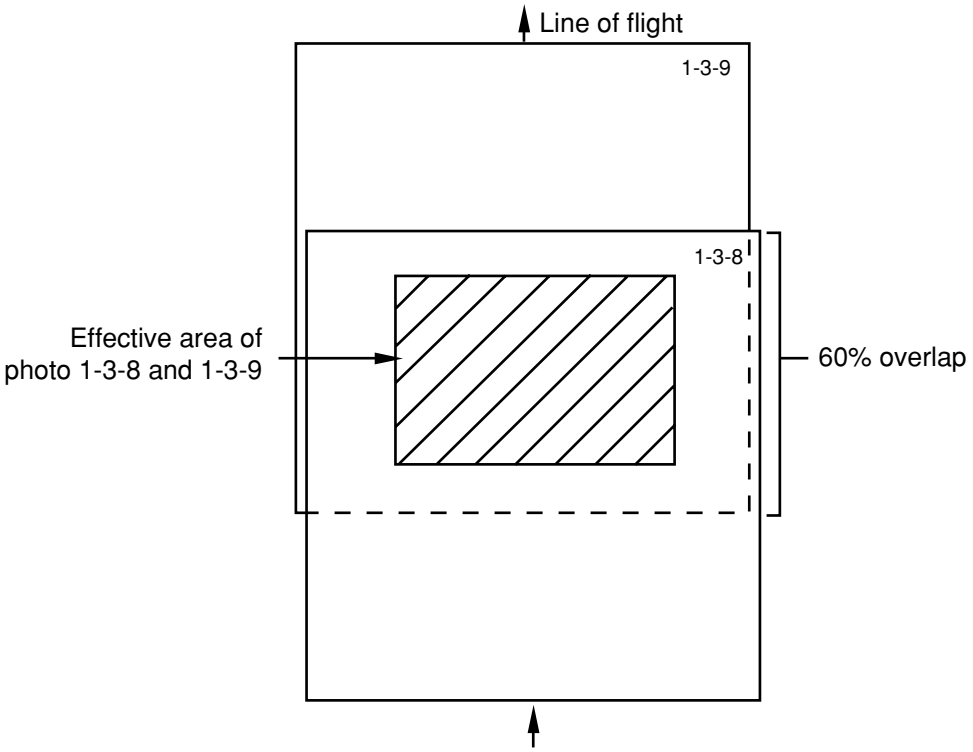

Figure 3. Effective area.

b. *Preparing Overlays*

Interpretations should be compiled on clear mylar overlays, thus allowing the photos to be preserved for other applications. A clear mylar overlay (9-x 9-inch) should be attached to each frame to be interpreted, and a fine-point permanent marking pen should be used to carefully annotate each side fiducial mark observed on the photo. The identification format (photo labeling) is then transferred from each photo so that it can be easily reregistered if the overlay becomes detached. The identification format

includes the date of the photography, agency, scale, project code, and frame number (roll-flight-exposure number) as shown in Figure 4.

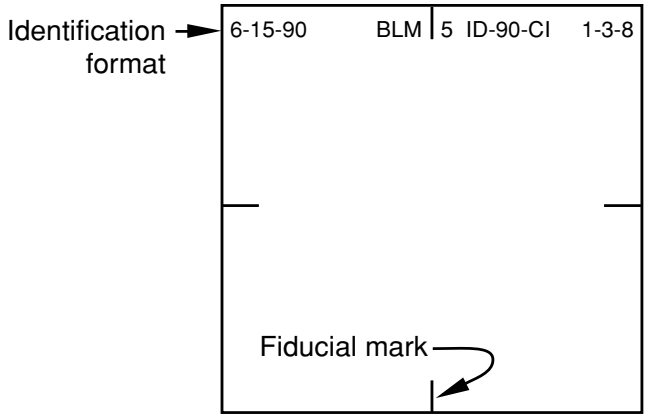

Figure 4. Sample identification format.

2. *Selecting the Minimum Mapping Unit*

A minimum mapping unit (MMU) should be selected prior to photo interpretation. The MMU serves as a guide for all future polygon delineation and mapping. For example, a 1-acre MMU would be equivalent to a 0.1-inch square at 1:24,000 scale. Although very small features and individual plants are discernible on large-scale aerial photos, a reasonable mapping unit must be selected. The interpreter must keep in mind that the delineations will be reduced in size significantly when the data is transferred to the map base. To assist in interpretation, a template depicting the MMU at the intended scale should be constructed to use as a guide during interpretation. Sample MMU templates are provided in Appendix A.

Larger riparian-wetland areas can be portrayed as polygons on a 1:24,000-scale map base. However, the majority of BLM streams have riparian-wetland communities that are quite small and cannot be portrayed with polygons at a scale of 1:24,000. This complicates the use of detailed riparian-wetland data within a GIS. Features that are too small to portray with an MMU as a polygon at the final map scale can be compiled as line or point data. Line segments must be described and defined. Appropriate attributes must be assigned to features when they are input into a GIS. For example, a red line segment represents a width of less than 100 feet. This information, along with line length and map scale, determines line segment acreage. Spot symbols need to be defined in terms of area. For example, spot symbols represent areas less than .5 acre. GIS feature design and descriptions are discussed at length in Technical Reference 1737-7, *Procedures for Ecological Site Inventory—With Special Reference to Riparian-Wetland Sites* (Leonard et al. 1992). These procedures are easily adapted to any GIS input procedure, but should be defined prior to map transfer.

3. *Developing a Vegetation Analysis Framework*

If vegetation analysis is part of the defined project, a vegetation analysis framework should be developed prior to interpretation. This framework describes the characteristics of the dominant and mixed riparian-wetland communities to be encountered and delineated. As interpretation proceeds, the framework is modified as needed. Appendix B provides an example of a vegetation analysis framework that was used in 1986 during a work session in Nevada and found to be adequate for that environment. Resource specialists are urged to review this framework and create their own based on local requirements. The framework should include defined criteria for the classes that are selected. The previously selected MMU should be used for interpretations. Delineations should be confined to the riparian-wetland area and interpretation kept within the effective area.

4. *Analyzing the Photos*

Each information layer should be compiled on a separate overlay. For example, stream channels on recent photos often show much change from the older 7 1/2-minute topographic maps. Stream channels, therefore, are compiled on one overlay to monitor stream channel movement, while vegetation interpretations are compiled on a separate overlay. Separating the data layers allows ease in map transfer and subsequent digitization.

Photo interpreters should use the best available optical equipment during the initial stages of the project. A zoom transfer scope allows interpretations to be directly compiled from photo to map base. If this equipment is not available, a two-step process is required. Stereoscopic viewing of prints is helpful, particularly in determining relative heights of tree and shrub species. Aerial photographs can be obtained as paper prints or positive film transparencies. Although paper prints are commonly used in the field, it is strongly recommended that film transparencies be used with adequate back lighting for interpretation because they provide a finer resolution image. Visual analysis using transparencies under stereo magnification has proven to be of great value.

While interpreting the photo, it is best to proceed from the dominant or purer types of communities to the more difficult mixed communities. Using the MMU template as a guide for polygon delineation, each vegetation type should be systematically identified. To develop interpretive consistency, all of one type should be delineated at the same time. Jumping around creates confusion in interpretation. Photo 7 in Appendix D shows interpretations on a portion of Tabor Creek, NV.

Use of supporting ground photography is encouraged, as are field visits. If aerial photography was contracted, the ground data that was collected when targeting was accomplished (see section III.B.4) should be used. Photo interpretation is a confidence-building exercise and it is important to use all

available supporting data. Although the first several photos take longer, experience has shown that photo interpreters increase their speed and efficiency once confidence is gained.

When analysis is complete, interpretations can be transferred to a standard map base. Once transfer is completed, the compilation can be entered into a GIS. Once input into a GIS, future monitoring, change detection, and analysis can be achieved quickly (see section IV.C).

If input into GIS is not required, and the dominant use of the data is to gather tabular information concerning *approximate acreage*, photo mensuration is possible.

5. *Using Photo Mensuration*

After the photo preparation and interpretation processes are complete, it is possible to tabulate acreage directly from the photos. This process is called photo mensuration. The resulting acreage figures are *approximations;* this method is far less accurate due to the lack of a controlled map base. Photo mensuration is more accurately calculated on interpretations that have been carefully transferred to a map base.

a. Determining Photo Scale

The contracted photo scale, which is normally annotated in the identification format on each photo, is not the actual photo scale. When severe elevation changes occur within any flight line, the actual photo scale varies considerably and affects the mensuration results. The actual scale on any given photo is calculated using a known ground distance. On large-scale photos, this distance is obtained between the target sets that are placed before the flight (see section III.B.3). On smaller scale photos, calculation is commonly made by measuring a distance between two photo- and map-identifiable features (Crisco, 1988). An average scale for the *flight line* can then be determined for mensuration purposes.

Photo scale (PS) is the ratio of photo distance (PD) to ground distance (GD). *All values must be converted to the same unit of measure*.

$$\frac{PD}{GD} = PS$$

Example: The ground distance between targets *A* and *B* is 400 feet. The photo distance between the same targets *A* and *B* is 2 inches. What is the photo scale?

$$\frac{2'' \text{ (PD)}}{400' \text{ x } 12'' \text{ (GD)}} = \frac{2'' \text{ (PD)}}{4{,}800'' \text{ (GD)}} \div \frac{2''}{2''} = \frac{1''}{2{,}400''}$$

Photo Scale = 1:2,400

Photo scale is expressed as a ratio: 1 inch on the photo represents 2,400 inches on the ground. Once the photo scale is determined, the descriptive scale is easily calculated. The descriptive scale shows how many feet on the ground are equivalent to 1 inch on the photo. In this example, the descriptive scale is figured as follows:

$$\frac{1''}{2{,}400'' \div 12''} = \frac{1''}{200'}$$

Descriptive Scale: 1"=200'

b. Calculating Acreage

There are several methods for determining acreage. These methods may be used directly on the photo, but are more accurate if used on a controlled map base once the interpretations have been transferred.

Many Field Offices have access to digital planimeters that allow direct calculation of acreage when the photo scale is entered. Additionally, portable digital planimeters can be rented on a daily basis at a reasonable cost.

If the project area is small, the dot grid and manual methods are cost-efficient alternatives (Crisco 1988). Acreage calculation can be determined with most GIS software packages, once the interpretations are digitized.

As the data is assembled, it should be recorded on a vegetation analysis framework form (Appendix B). The data can be recorded by photo number, and subsequent tabulation by other subdivisions (e.g., allotment, ownership, stream segment) is possible if desired.

C. Capturing Data for GIS Input

1. Determining the Map Base

If data is primarily to be used to create a map of riparian-wetland cover types and may ultimately be used in a GIS, map base considerations are critical. The standard base for BLM resource management applications is the USGS 7 1/2-minute, 1:24,000-scale topographic map or orthophoto quadrangle. Stable base mylar provides the most accurate digitizing base and should always be used in place of paper print products.

2. Transferring Data to the Map Base

Aerial photos contain displacement and distortion and do not provide map accuracy for measuring purposes. Photo analysis should be followed by transfer of the detail onto a map base to provide input for a GIS. This process

prevents duplication of effort in future monitoring and supports baseline data acquisition for ecosystem-based management activities.

To begin map transfer, the vegetation analysis framework, the map base MMU template (i.e., 1:24,000), and the GIS compilation guidelines discussed in section IV.B.2 should be used. The interpretations from the photos should be carefully compiled onto a stable base orthophoto. Detail is easier to transfer from an aerial photo to an orthophoto because both have photo-identifiable features in common. If orthophotos are not available, 7 1/2-minute topographic maps can be used as a base. Discrete boundaries of the lines and polygons, along with appropriate labels, should be transferred to the base map. If the finished compilation overlay is to be mechanically scanned, the compilation method for producing the most efficiently scanned overlay should first be determined. For example, black lines with blue attribute labels are easier to scan and edit than numerous color classes.

Once interpretations are transferred to the map base, the manual photo mensuration technique can be used to acquire acreage figures, which is more accurate than direct mensuration off the photos. If the area is large and the desired result is analysis in a GIS, alternate data capture methods are more efficient.

3. Capturing Data in a GIS

Once the data has been compiled on a stable map base, it is ready to enter into a GIS. A local GIS specialist should be consulted to determine the most efficient method of input. Manual digitizing on a tablet is commonly used. Heads-up digitizing from a digital orthophoto is also a common method of input. Scanner technology is popular, although it is somewhat costly. A drum scanner is available for use at NSTC.

V. Using Remote Sensing for Field Applications

Methods and standards for managing riparian-wetland areas have been established within BLM's technical reference series (TR 1737) on riparian area management. Remote sensing techniques can be applied in virtually all types of riparian-wetland management. Inventory and monitoring are more traditional uses of remotely sensed data. However, aerial photography can also assist in assessing functionality, determining classification, and improving management planning processes. The table in Appendix C provides suggestions on how to use remotely sensed data for riparian-wetland management applications. Suggested scales and film types are also given. Actual scale and film selection should be determined by the intended use and size of the area. Resource specialists may find that other scales or film types are adequate for their applications.

A. Inventorying and Monitoring Riparian-Wetland Areas

Remote sensing techniques have long been used to inventory and monitor riparian-wetland areas. Using the appropriate date, scale, and film, riparian-wetland vegetation can be interpreted and measured using methods described in section IV. Small-scale photos give a general overall perspective of the area, including the geomorphology, landform, drainage pattern, and watershed area and condition. Aerial photos can be used to determine channel sinuosity, channel confinement, and valley width, and provide a more accurate basis for analysis than topographic maps. Stereoscopic photo interpretation, along with physiographic analysis of a 7 1/2-minute topographic map, allow preliminary ecological typing. Initial assessment of vegetative bank protection and water sedimentation can be performed using medium- or large-scale aerial photos. Vegetation association and phase can be identified using aerial photos, as discussed in-depth in Technical Reference 1737-3, *Inventory and Monitoring Riparian Areas*, (Myers 1989). Certainly tree canopy, herbaceous cover, and to some extent, age distribution of woody dominant species can also be identified using aerial photos at an adequate scale.

Technical Reference 1737-8, *Greenline Riparian-Wetland Monitoring* (Cagney 1993), discusses methods that can utilize large-scale (1:2,400) color infrared photography. The Forest Service General Technical Report 47, *Monitoring the Vegetation Resources in Riparian Areas* (Winward 2000), offers additional, updated information on this topic. Recommended transect length is a minimum of 726 feet along the greenline. At 1:2,400 scale, 1 inch on the aerial photo represents approximately 200 feet on the ground. With color infrared film, vegetation composition can be differentiated along the transect. In fact, resolution at that scale is better than 1 foot. After field checks have been conducted, interpretations can be used to support the baseline data.

The most easily detected change in a riparian-wetland area is a reduction in foliar cover and an increase in bare soil. This change may be obvious upon inspection of the baseline (initial) photo compared with monitoring photos taken 5 to 10 years later. The cause of the change may be answered only by on-the-ground inspection. The photos offer an opportunity to monitor the extent of change, but not necessarily the cause.

Once baseline data is established, a monitoring plan should be initiated for those areas in need of more intense scrutiny. Videography is especially well suited for quick damage assessment, but resolution is much lower than conventional aerial photography.

1. Acquiring Photos for Monitoring

The same considerations outlined for the original aerial photography contract should be used to plan subsequent flights for monitoring purposes. Area selection, season and time of day, film type, scale, specifications, procurement, and ground targeting requirements should follow the same criteria as the original project. Flight maps used in the previous project should be referred to in designing the subsequent flights. The idea is to create conditions as close to those of the previous flight as possible. Although not mandatory, using the same conditions greatly simplifies interpretation.

2. Analyzing Photos for Monitoring

The old and new aerial photos over the riparian-wetland area, along with smaller scale photos of the watershed, should be compared visually. From this comparison, critical areas can be evaluated and apparent changes occurring on nonstudy areas can also be detected and documented. One of the important advantages of a photo-based monitoring system over entirely ground-based study is the ability to expand the area that can be evaluated.

It is anticipated that several key areas will already be selected prior to having the area reflown. These sites should be closely evaluated. Interpretation and analysis should again be performed on these key areas and results compared. It is important to remember that critical steps performed during the initial baseline interpretation are essential for monitoring the areas. In addition, if the visual comparison yielded further areas of change, a reinterpretation may be appropriate. Once photo interpretation and analysis are complete, the probable causes of change should be investigated.

B. Determining Classification

As with inventory and monitoring, remote sensing brings an added dimension to the classification process, which is discussed in Technical Reference 1737-5, *Riparian and Wetland Classification Review* (Gebhardt et al. 1990). Possibly the greatest benefit is the overall perspective that is provided with smaller scale imagery. Using a broad approach allows limiting factors in the landscape to manifest themselves. Emphasis should be placed on using the remotely sensed data as a prerequisite to the classification itself.

Technical Reference 1737-7, *Procedures for Ecological Site Inventory—With Special Reference to Riparian-Wetland Sites* (Leonard et al. 1992), describes a process that looks at the interaction between soils, climate, hydrology, and vegetation for riparian-wetland resources and uplands. This highly interdisciplinary activity

lends itself well to using remote sensing techniques. Using appropriate imagery of the area under study, each interdisciplinary team member can relate their perspective of the study area. After initial team observations are made, individual study can be undertaken to determine such things as vegetation composition and acreage, canopy cover, bare soil, locations for gathering hydrologic information, present vegetation as compared with previous historical photos, open water surface area, soil and surface geology characteristics, and general watershed quality.

C. Assessing Functionality

Considerable effort has been expended to inventory, classify, restore, enhance, and protect riparian-wetland areas. The following technical references define a structured interdisciplinary activity that assists resource specialists in determining the condition of riparian-wetland areas on public lands:

TR 1737-9, *Process for Assessing Proper Functioning Condition* (Prichard et al. 1993)

TR 1737-11, *Process for Assessing Proper Functioning Condition for Lentic Riparian-Wetland Areas* (Prichard et al. 1994)

TR 1737-15, *A User Guide to Assessing Proper Functioning Condition and the Supporting Science for Lotic Areas* (Prichard et al. 1998)

TR 1737-16, *A User Guide to Assessing Proper Functioning Condition and the Supporting Science for Lentic Areas* (Prichard et al. 1999)

Although riparian-wetland areas are small in comparison to the vast acreage of public lands, assessing the condition of all these areas is an extensive effort. Aerial photos can assist in the initial planning for functionality assessment. Remotely sensed data can be beneficial in determining existing condition, potential condition, resource values, planned actions, and monitoring requirements.

Aerial photos can be used to assist in completing the reporting tables shown in these technical references to define riparian-wetland management objectives. Riverine miles, acreage, and preliminary determination of functioning condition can be assessed using remotely sensed data. Initial trend can be assessed using historical photos. Given the appropriate scale and film type, aerial photos can significantly reduce field time and overall evaluation efforts.

Technical Reference 1737-12, *Using Aerial Photographs to Assess Proper Functioning Condition of Riparian-Wetland Areas* (Prichard et al. 1996), provides detailed explanations and procedures for using aerial photography to assess condition.

D. Supporting Other Management Techniques

Grazing management, as discussed in Technical References 1737-4, *Grazing Management in Riparian Areas* (Kinch 1989), and 1737-14, *Grazing Management for Riparian-Wetland Areas* (Leonard et al. 1997) can be enhanced by using remotely sensed data to develop alternative strategies. Using historical photos, range conservationists are able to ascertain how management strategies used over the years have impacted the land. Heavily grazed riparian-wetland areas and uplands are generally quite obvious on aerial photos and are stark evidence to mismanagement of the public lands. Color infrared photos exhibit the seasonal and topographic aspects of range suitability and carrying capacity. Used in allotment planning, aerial photos assist in planning livestock access points, pasture design, and riparian-wetland protection.

Technical Reference 1737-6, *Management Techniques in Riparian Areas* (Smith and Prichard 1992), discusses methods to achieve specific goals and objectives in riparian-wetland management. The basic management unit for these techniques is the watershed. Small-scale aerial photos and satellite imagery are excellent tools for becoming familiar with a watershed. They allow a broader perspective than on-site observation and present a more comprehensive picture than a topographic map. Some of the management techniques that are enhanced by using aerial photos include:

Fencing: Exclosures are areas that are easily distinguished on an aerial photo. Aerial photos may be used to measure and determine the amount of fencing required and to determine acreage associated with fenced areas.

Prescribed burns: Aerial photos can assist in prescribed burn planning. Topography and fuel characteristics are features easily identified from photos. Fire breaks and control lines can be determined. Digital image processing techniques have been used in the past to create fire fuels map products for states in the Western U.S. These products, produced at a small scale, determine fuel type and burn characteristics using remotely sensed satellite data.

Forestry practices: Forest management traditionally uses remote sensing techniques for planning, inventory, and monitoring.

Mineral activities: Mineral activities offer extensive opportunities to develop areas of new riparian-wetland vegetation. Aerial photos and satellite imagery provide the capability to detect surface disturbance as well as healthy plant vigor. Change detection and monitoring activities in mining areas are excellent applications for remote sensing techniques in either a digital or manual environment.

Structures: Physical structures are placed in watersheds to control erosion or degradation of a site. Aerial photos assist in planning the placement of those structures in addition to monitoring the effects of those structures in the future. Most failures result from trying to apply a technique that worked well for one site without realizing that the new site is different. This mistake can be avoided by using small-scale imagery, which allows the surrounding landform, soils, and watershed to be studied to determine the possible effectiveness of the plan.

Beaver management: Beaver can be used to naturally transform pioneer woody vegetation into physical features that result in the expansion of floodplain, riparian-wetland community structure, diversity, and productivity (Dickinson 1971). Beaver activity is uniquely evident on aerial photos. Types of adjacent woody vegetation can also be identified by aerial photos (Parsons and Brown 1978).

Bank stabilization: Streambank stabilization efforts are aided by the use of historical photos for change detection purposes. Natural erosive components of the surrounding landscape can help determine the potential of the area.

Recreation planning: In recreation planning, determining riparian-wetland values is extremely important. The entire ecosystem should be taken into consideration. Photos can be used to develop future trail systems, plan site design to minimize vehicular impacts to riparian-wetland areas, evaluate adjacent uplands for potential hazards to human concentrations, and determine floodplain extent.

Road construction: Road construction planning should always incorporate the use of aerial photos to help determine impacts to adjacent riparian-wetland areas. Landform, vegetation inventory, flood potential, and watershed analysis are just a few components that can be studied from an aerial perspective.

VI. Summary

Remote sensing techniques provide valuable information for riparian-wetland area management. Aerial photos and satellite imagery can be used to establish baseline data on which future management is based.

The first step in acquiring aerial photo baseline data is to define the objective of the project, and to select the appropriate scale and film type to meet that objective. Then research is conducted to determine whether photos with the desired specifications exist.

Contracting for aerial photography is an option if appropriate photos for the area of interest are not available. Planning for a contract involves selecting the area; determining the season, time of day to fly, and film type; and selecting the scale. Prior to the flight, ground targets are placed to provide ground reference for determining photo scale, and vegetation data is collected on-site for use during analysis.

Once the photos have been acquired, interpretation can be accomplished by local BLM staff, State or NSTC personnel, or contracted photo interpreters. Interpretation procedures consist of preparing photos, determining a minimum mapping unit (MMU), developing a vegetation analysis framework, and analyzing photos. Photo mensuration derived directly from the photos is possible on smaller projects or when approximate measurements are acceptable.

If data is to be used for analysis purposes in a GIS environment, interpretations are transferred to a stable map base from the photos. After transferring data to an orthophoto, digitization into a GIS is possible.

Remote sensing techniques allow resource specialists to monitor an area when field conditions do not allow on-site visits. Changes in management strategies for riparian-wetland areas, which are characteristically highly responsive to modifications, are easily monitored at specified intervals. Remotely sensed data can also be used in determining classification, assessing functionality, and supporting other management techniques addressed in the Riparian Area Management technical reference series.

To ensure that specific objectives are met, projects involving remote sensing must be carefully designed and executed. The NSTC remote sensing staff is available to provide support and assistance at each stage of the project.

Literature Cited

Aldrich, R.C. 1979. Remote sensing of wildland resources: A state-of-the-art review. General Technical Report RM-71. USDA Forest Service, Rocky Mountain Research Station, Fort Collins, CO. 56 pp.

Anderson, V.J. and P.J. Hardin. 1992. Infrared photo interpretation of non-riparian wetlands. Rangelands: 14(6) 334-337.

Batson, F.T., P.E. Cuplin, and W.A. Crisco. 1987. Riparian area management: The use of aerial photography to inventory and monitor riparian areas. TR 1737-2. Bureau of Land Management, BLM/YA/PT-87/021+1737, Denver, CO. 16 pp.

Cagney, J. 1993. Riparian area management: Greenline riparian-wetland monitoring. TR 1737-8. Bureau of Land Management, BLM/SC/ST-93/001+1737, Denver, CO. 45 pp.

Crisco, W.A. 1988. Interpretation of aerial photographs. USDI, BLM/YA/PT-88/001+1268, Denver, CO. 41 pp.

Dickinson, N.R. 1971. Aerial photographs as an aid in beaver management. N.Y. Fish and Game J. 18(1):57-61.

Gebhardt, K., S. Leonard, G. Staidl, and D. Prichard. 1990. Riparian area management: Riparian and wetland classification review. TR 1737-5. Bureau of Land Management, BLM/YA/PT-91/002+1737, Denver, CO. 56 pp.

Keating, Jr., J.B. 1993. The geo-positioning selection guide for resource management. Technical Note 389. Bureau of Land Management, BLM/SC/PT-93/002+9160, Denver, CO. 64 pp.

Kinch, G. 1989. Riparian area management: Grazing management in riparian areas. TR 1737-4. Bureau of Land Management, BLM/YA/PT-89/021+1737, Denver, CO. 48 pp.

Leonard, S., G. Staidl, J. Fogg, K. Gebhardt, W. Hagenbuck, and D. Prichard. 1992. Riparian area management: Procedures for ecological site inventory—with special reference to riparian-wetland sites. TR 1737-7. Bureau of Land Management, BLM/SC/PT-92/004+1737, Denver, CO. 135 pp.

Mereszczak, I., J. Colmer, J. Oden, J. Almy, M. Hoppus, P. Ishikawa, Jr., H. Lachowski, J. Ward, and A. Oslin, Ph.D. 1990. Riparian area management: What can remote sensing contribute? Engineering Management Series EM 7140-19. USDA, Forest Service, Washington, DC.

Myers, L.H. 1989. Riparian area management: Inventory and monitoring riparian areas. TR 1737-3. Bureau of Land Management, BLM/YA/PT-87/002+1737, Denver, CO. 79 pp.

Parsons, G.R. and M.K. Brown. 1978. An assessment of aerial photography interpretation for recognizing potential beaver colony sites. In: Trans. N.E. Sect. TWS, 35th N.E. Fish & Wildlife Conference, White Sulphur Springs., WV. Pages 181-184.

Prichard, D., H. Barrett, J. Cagney, R. Clark, J. Fogg, K. Gebhardt, P. Hansen, B. Mitchell, and D. Tippy. 1993. Riparian area management: Process for assessing proper functioning condition. TR 1737-9. Bureau of Land Management, BLM/SC/ST-93/003+1737, Denver, CO. 60 pp.

Prichard, D., C. Bridges, S. Leonard, R. Krapf, and W. Hagenbuck. 1994. Riparian area management: Process for assessing proper functioning condition for lentic riparian-wetland areas. TR 1737-11. Bureau of Land Management, BLM/SC/ST-94/008+1737, Denver, CO. 46 pp.

Prichard, D., P. Clemmer, M. Gorges, G. Meyer, and K. Shumac. 1996. Riparian area management: Using aerial photographs to assess proper functioning condition of riparian wetland areas. TR 1737-12. Bureau of Land Management, BLM/RS/ST-96/007+1737, Denver, CO. 52 pp.

Prichard, D., J. Anderson, C. Correll, J. Fogg, K. Gebhardt, R. Krapf, S. Leonard, B. Mitchell, and J. Staats. 1998. Riparian area management: A user guide to assessing proper functioning condition and the supporting science for lotic areas. TR 1737-15, Bureau of Land Management, BLM/RS/ST-98/001+1737, Denver, CO. 136 pp.

Prichard, D., F. Berg, W. Hagenbuck, R. Krapf, R. Leinard, S. Leonard, M. Manning, C. Noble, and J. Staats, 1999. Riparian area management: A user guide to assessing proper functioning condition and the supporting science for lentic areas. TR 1737-16. Bureau of Land Management, BLM/RS/ST-99/001+1737, Denver, CO. 109 pp.

Smith, B. and D. Prichard. 1992. Riparian area management: Management techniques in riparian areas. TR 1737-6. Bureau of Land Management, BLM/SC/PT-92/003+1737, Denver, CO. 44 pp.

Winward, A. 2000. Monitoring the vegetation resources in riparian areas. General Technical Report RMRS-GTR-47. U.S. Department of Agriculture, Forest Service, Rocky Mountain Research Station, Ogden, UT. 49 pp.

Appendix A
Minimum Mapping Unit Templates

Scale

1:40,000

1"= 3,333'

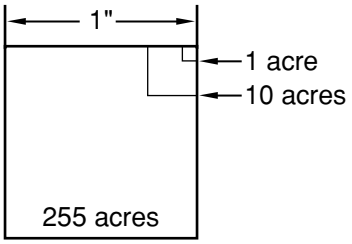

1:24,000

1"= 2,000'

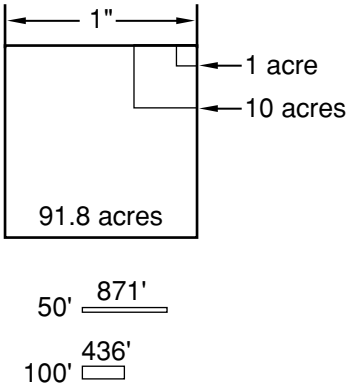

1:12,000

1"= 1,000'

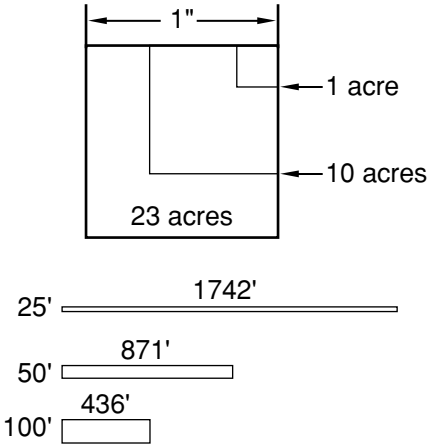

Scale

1:9,000

1"= 750'

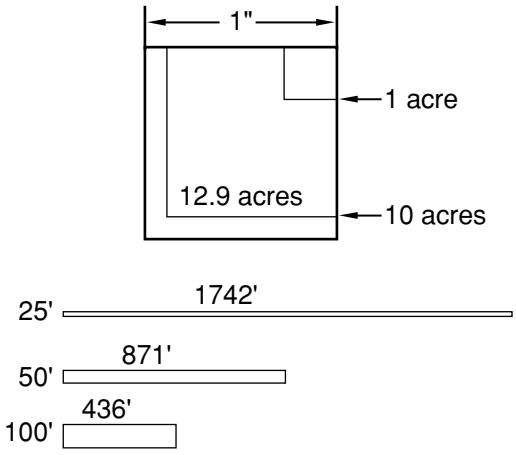

1:6,000

1"= 500'

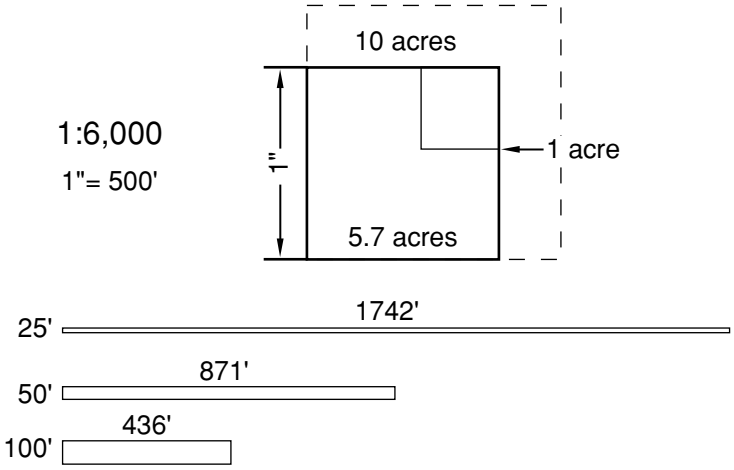

1:4,800

1"= 400'

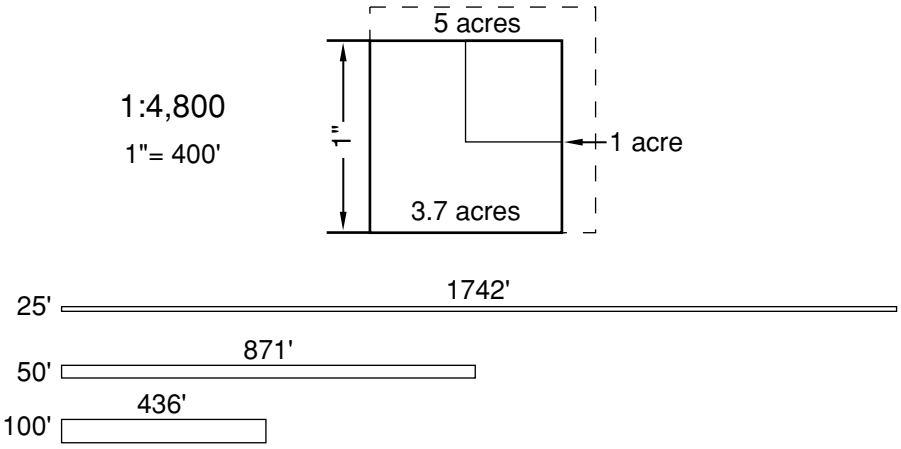

Appendix B
Sample Vegetation Analysis Framework

Riparian-Wetland Plant Community Photo Analysis Form
(can be attached on photo or overlay when complete)

Site Name _____
Photo Number _____
Date _____
Interpreter _____

Dominant Species Groups

1. Herbaceous Vegetation - Minimum Mapping Unit (MMU) is 1 acre. Herbaceous vegetation is dominant and comprises 75% or more of the ground cover. Shrubs and trees may be present but amount to less than MMU.
   1_____acres

2. Shrubs - MMU is 1 acre. Shrubs are dominant and comprise 75% or more of canopy. Trees and herbaceous vegetation may be present but amount to less than MMU.
   2_____acres

3. Trees - MMU is 1 acre. Trees 10 feet high are dominant and comprise 75% or more of canopy. Shrubs and herbaceous vegetation may be present but amount to less than MMU.
   3_____acres

4. Riparian-Wetland Vegetation - Scarce or absent. A linear measurement of the length of stream where there is an absence of riparian-wetland vegetation in MMU amounts. If less than 200 feet in length, disregard and include in other types (dominant or mixed).
   4_____acres

Mixed Communities

MMUs of mixed types are 1 acre. Tree, shrub, or herbaceous vegetation less than 75% cover with a lesser amount of one or two other groups included in a mixed community.

5. Shrub/herbaceous vegetation 5_____acres
6. Tree/herbaceous vegetation 6_____acres
7. Tree/shrub 7_____acres
8. Tree/shrub/herbaceous vegetation 8_____acres

Total riparian-wetland _____acres

Appendix C
Remote Sensing Application Guide for Riparian-Wetland Management

General Comments

1) The **Scale** column indicates suggested scales only. Appropriate scale selection is dependent on the size of the area under consideration. Larger or smaller scales may be used for the applications listed, but may create more interpretive work for the analyst. Scale selection should be carefully determined based on the area of consideration and the intended use.

2) **Scale** column abbreviations represent the following:

   L = Large scale (1:2,400 to 1:12,000)
   M= Medium scale (1:15,840 to 1:30,000)
   S = Small scale (< 1:30,000)

3) The **Film Type** column indicates suggested film types only. In many instances, other film types are also appropriate for the applications listed.

4) **Film Type** column abbreviations represent the following:

   B = Black and white
   C = Natural color
   I = False color infrared
   S = Satellite imagery

5) The following table provides examples of various remote sensing applications that can be used in riparian-wetland management. This list of applications is by no means inclusive.

Remote Sensing Application Guide for Riparian-Wetland Management*

Task/Application	Scale	Film Type	Comments
Project Planning			
Synoptic view	S	B/I/S	Provides an overall perspective of the area; general condition, limiting factors, water-shed delineation; ecoregion delineation.
Linear miles	S	B/C/I	Derived from descriptive scale.
Area identification	S	B/C/I /S	Locating areas in need of further examination; defining reaches; identifying field inventory sites.
Geomorphology/landform	S	C	Slope, aspect, relief.
Drainage pattern	S	B	
Inventory			***Technical References 1737-2**; 1737-3***
Riparian-wetland	M	I	Springs, seeps, wet meadow as habitat type related to the associated vegetation.
Vegetation			
Acreage determination	L	C/I	Interpretations should be transferred to an orthophoto for map accuracy calculation. The photo scale needed is dependent on the size of the riparian-wetland areas to be measured.
Density	L	I	Cottonwoods, willows.
Reproduction	L	I	Young trees, but not seedlings.
Structure	L	C	Height of vegetation.
Streambank shade	L	C	
Streambank stability	L	I	Associated with vegetation composition.
Species composition	L	I	Cottonwoods, willows.
Percent cover	L	I	Trees, shrubs, herbaceous, bare soil.
Hydrology			
Stream width	M	C	
Floodplain	M	C	
Streambed silt	M	I	
Stream channel stability & movement	M	C	
Channel sinuosity	S	C/I	Photos often identify current channel patterns better than older 7 1/2-minute topographic maps.

Task/Application	Scale	Film Type	Comments
Soils			
Soil determination	M	B/C	Assists in identifying and recording soil information.
Soil characteristics	M	B/C	
Setting & associated land features	M	C	Slope, aspect, relief, wetness.
Classification			***Technical References 1737-5; 1737-7***
Potential	M	B/C/I	Compare historical photography to determine past management practices.
Limiting factors	S	C	Look at a larger area to determine possible factors effecting riparian-wetlands in the area of interest.
Field site planning	S	C/I	Use to identify locations for gathering vegetation, hydrology, and soils data.
General watershed quality	S	C/I	Provides broad perspective of watershed.
Surface geology	S	C	
Open water surface area	M	C/I	Scale depends on size of water body.
Acreage determination	L	C/I	See ***Inventory*** section.
Assessing Functionality			***Technical References 1737-9; 1737-11; 1737-12; 1737-15; 1737-16***
Planning			
Existing condition	L	I	Scale is dependent on the size of the riparian-wetland area.
Potential condition	L	I	Use historical photography to assess.
Resource values	M	C/I	Beaver dams, waterfowl habitat; evaluate surrounding ecovalues.
Management technique planning	M	C/I	See ***Management Planning*** section.
Monitoring	—	—	See ***Monitoring*** section.
Preliminary assessment of functionality	M	I	Use smaller scale imagery to assess a large area, then focus on areas that appear to need further investigation.

Task/Application	Scale	Film Type	Comments
Reporting tables			
Riverine/miles	S	I	General assessment.
Riverine/nonriverine acres	S	I	General assessment.
Functional condition	M	I	General indicators.
Trend	M	C/I	General indicators using historical photography.
Management Planning			***Technical References 1737-4**; 1737-6; 1737-14***
Grazing	M	C/I	Allotment planning applications.
Ecosystem-based evaluation	S	C/I	Provides a synoptic view of an area.
Project planning			Aerial photos are important ancillary data that should be examined prior to any management decision.
Exclosures	M	C	
Prescribed burns	M	C/I	
Physical structures	M	C	
Streambank stabilization	M	C	
Road construction	M	C	
Mineral activities	M	C	
Recreation planning	M	C	
Monitoring			***Technical References 1737-2**; 1737-3; 1737-8***** **and General Technical Report 47.** All applications that are listed in the ***Inventory*** section apply to monitoring.
Trend	—	—	Monitoring should attempt to replicate previous scale and film type as closely as possible.

* This table is not intended as an all-inclusive list of applications for riparian-wetland management.
** This publication is out of print. Copies may be available in libraries.

Appendix D
Aerial Photo Samples

Photo 1a is a portion of a natural color aerial photo of Texas Creek, Colorado, acquired October 14, 1976, at approximately 1:15,840 scale (i.e., 1 inch represents 1,320 feet). The arrow in the aerial shot indicates the gravel bar and bare ground seen in Photo 1b, which is a ground shot of the same area.

Photo 1b depicts on-the-ground conditions for Texas Creek in September 1976. The gravel bar and bare ground are obvious indicators of a *nonfunctional* stream.

Photo 1a ▲

▼ Photo 1b

Photo 2a is a portion of a color infrared aerial photo of Texas Creek, Colorado, acquired July 9, 1983, at approximately 1:24,000 scale (i.e., 1 inch represents 2,000 feet). The photo shows evidence of revegetation along the streambank, and the gravel bars are no longer evident.

Photo 2b shows Texas Creek in June 1978 in a *functional — at risk* condition. Management actions were changed in 1977 to reverse the trend of Texas Creek and allow the area to progress towards its capability and potential.

▲ **Photo 2a**

Photo 2b ▼

Photo 3a is a portion of a NAPP color infrared aerial photo of Texas Creek, Colorado, acquired September 29, 1988, at approximately 1:40,000 scale (i.e., 1 inch represents 3,333 feet). The arrow indicates taller vegetation, as seen in Photo 3b of the same area, as well as a higher spectral response from the healthy vegetation along the streambank.

Photo 3b is a ground shot of Texas Creek in July 1987, showing the area in *Properly Functioning Condition (PFC)*.

Photo 3a ▲

▼ Photo 3b

Photo 4

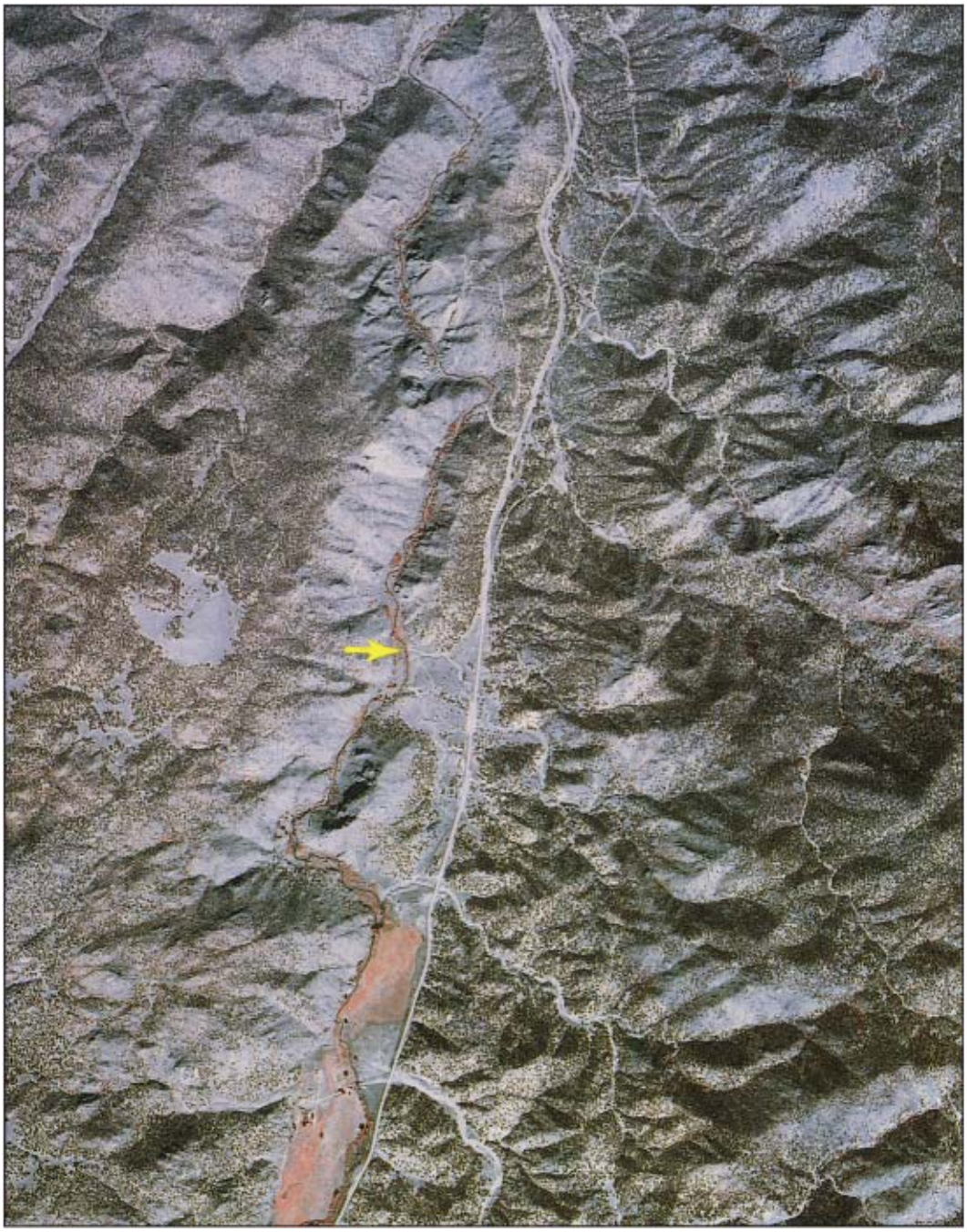

Photo 4 is an enlargement of the NAPP color infrared aerial photo (Photo 3a) of Texas Creek, Colorado, to approximately 1:24,000 scale.

Photo 5

Photo 5 is a portion of a color infrared aerial photo of Muddy Creek, Wyoming, acquired August 17, 1993, at approximately 1:3,000 scale (i.e., 1 inch represents 250 feet).

Photo 6a ▼

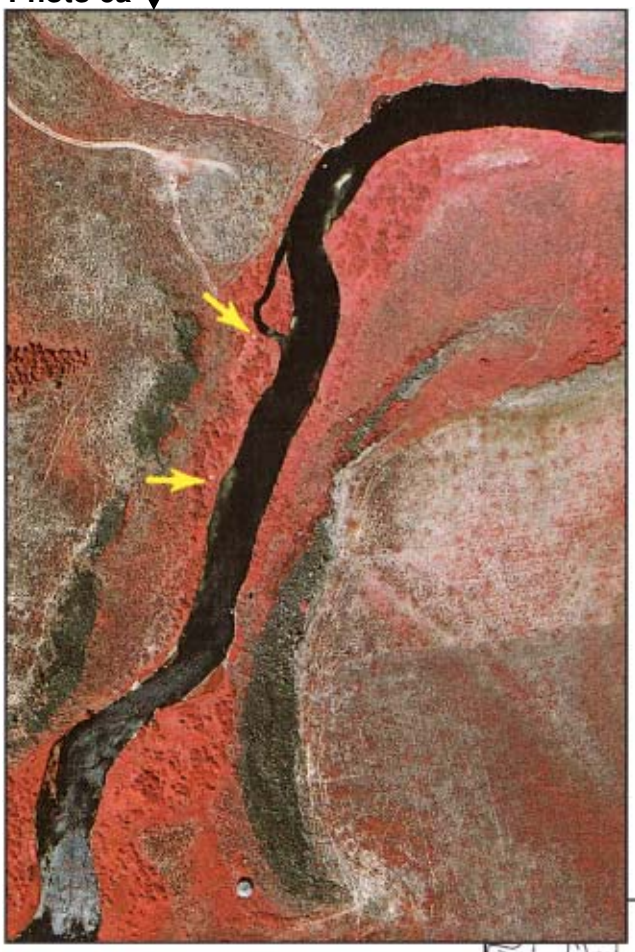

Photo 6a is a portion of a color infrared aerial photo of the Blackfoot River, Idaho, acquired August 2, 1993, at approximately 1:4,800 scale (i.e., 1 inch represents 400 feet). The arrows indicate where ground targets (panels) are visible. Targeting should be annotated on topographic maps, along with distance between targets and dominant vegetation information. The box shown on a portion of a 1:24,000-scale topographic map (6b) corresponds to the area shown in the aerial photo.

6b ▼

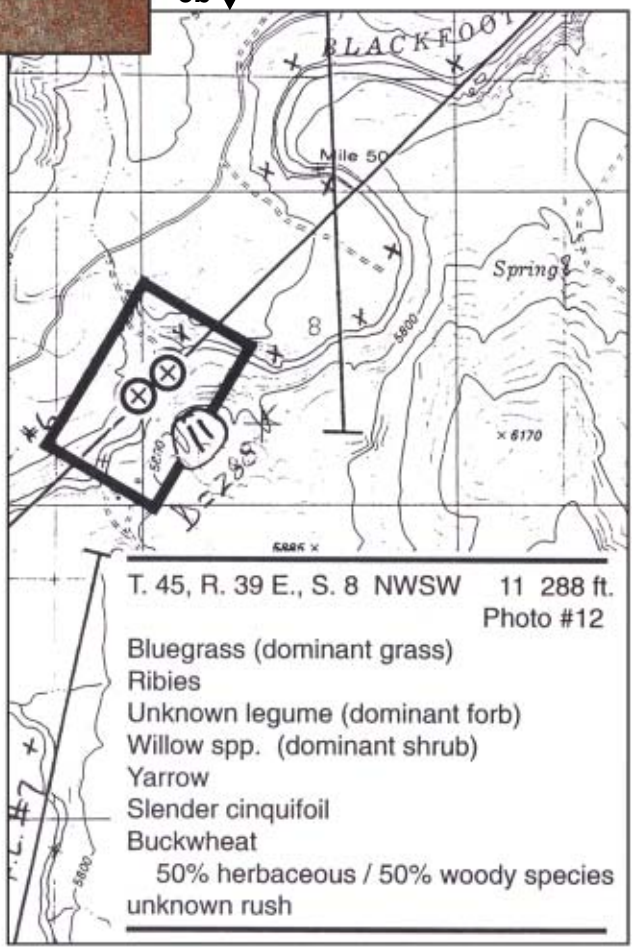

Photo 7

Photo 7 is a portion of a color infrared aerial photo of Tabor Creek, Nevada, acquired July 16, 1984, at approximately 1:2,400 scale (i.e., 1 inch represents 200 feet). Interpretations were compiled on clear mylar overlays registered to the fiducial marks on the photo.

REPORT DOCUMENTATION PAGE

Form Approved
OMB No. 0704-0188

Public reporting burden for this collection of information is estimated to average 1 hour per response, including the time for reviewing instructions, searching existing data sources, gathering and maintaining the data needed, and completing and reviewing the collection of information. Send comments regarding this burden estimate or any other aspect of this collection of information, including suggestions for reducing this burden, to Washington Headquarters Services, Directorate for Information Operations and Reports, 1215 Jefferson Davis Highway, Suite 1204, Arlington, VA 22202-4302, and to the Office of Management and Budget, Paperwork Reduction Project (0704-0188), Washington, DC 20503.

1. AGENCY USE ONLY *(Leave blank)*

2. REPORT DATE
January 2001

3. REPORT TYPE AND DATES COVERED
Revision to September 1994 version

4. TITLE AND SUBTITLE
RIPARIAN AREA MANAGEMENT TR 1737-10
The Use of Aerial Photography to Manage Riparian-Wetland Areas

5. FUNDING NUMBERS

6. AUTHOR(S)
Pam Clemmer

7. PERFORMING ORGANIZATION NAME(S) AND ADDRESS(ES)
U.S. Department of the Interior
Bureau of Land Management
National Science and Technology Center
P.O. Box 25047
Denver, CO 80225-0047

8. PERFORMING ORGANIZATION REPORT NUMBER
BLM/ST/ST-01/002+1737
(formerly BLM/SC/ST-94/005+1737)

9. SPONSORING/MONITORING AGENCY NAME(S) AND ADDRESS(ES)

10. SPONSORING/MONITORING AGENCY REPORT NUMBER

11. SUPPLEMENTARY NOTES
This technical reference was originally produced as an enhanced version of RIPARIAN AREA MANAGEMENT TR 1737-2, The Use of Aerial Photography to Inventory and Monitor Riparian Areas. This document is a revision to its original version published in September 1994.

12a. DISTRIBUTION/AVAILABILITY STATEMENT

12b. DISTRIBUTION CODE

13. ABSTRACT *(Maximum 200 words)*

This technical reference provides basic information, concepts, and procedures associated with using aerial photography to establish baseline data for effective management of riparian-wetland areas. Suggestions for the use of various scales of photography, guidance for acquiring aerial photography, and general procedures for conducting a vegetation inventory are included.

14. SUBJECT TERMS
- Aerial photography
- Remote sensing
- Riparian area management
- Wetlands
- Monitoring

15. NUMBER OF PAGES
64 + covers

16. PRICE CODE

17. SECURITY CLASSIFICATION OF REPORT
Unclassified

18. SECURITY CLASSIFICATION OF THIS PAGE
Unclassified

19. SECURITY CLASSIFICATION OF ABSTRACT
Unclassified

20. LIMITATION OF ABSTRACT
UL

The mention of trade names or commercial products does not constitute endorsement or recommendation for use by the Federal Government.